UNITED STATES PATENT AND TRADEMARK OFFICE

---

BEFORE THE PATENT TRIAL AND APPEAL BOARD

---

NESPRESSO USA, INC.,
Petitioner,

v.

K-FEE SYSTEM,
Patent Owner.

---

Case IPR2023-00502
U.S. Patent No. 10,994,923

---

**PATENT OWNER K-FEE SYSTEM GMBH'S NOTICE OF APPEAL**

**NOTICE OF APPEAL TO THE FEDERAL CIRCUIT**

Notice is hereby given, pursuant to 35 U.S.C. §§ 141, 142, and 319 and 37 C.F.R. §§ 90.2 and 90.3(a)(1), that K-fee System GmbH ("Patent Owner") hereby appeals to the United States Court of Appeals for the Federal Circuit from the Final Written Decision entered on September 10, 2024 (Paper 26), and from all underlying orders, decisions, rulings, and opinions, regarding *inter partes* review of U.S. Patent No. 10,994,923 ("the '923 Patent") in Case No. IPR2023-00502. This appeal is timely under 35 U.S.C. § 142 and 37 C.F.R. § 90.3.

In accordance with 37 C.F.R. § 90.2(a)(3)(ii), Patent Owner further states that the issues on appeal are anticipated to include, but are not limited to:

(1) whether the United States Patent and Trademark Office (PTO) erred in determining that Patent Owner's expert is not qualified to offer expert testimony from the perspective of a person having ordinary skill in the art;

(2) whether the PTO erred in determining the priority date accorded to the '923 Patent;

(3) whether the PTO erred in determining that a person having ordinary skill in the art would have combined Yoakim, Jarisch, and Rapparini; and

(4) whether the PTO erred in determining that the challenged claims are

unpatentable as obvious in light of Yoakim, Jarisch, and Rapparini.

Concurrently with this submission, in accordance with 37 C.F.R. § 90.2(a) and Federal Circuit Rule 15(a)(1), a copy of this Notice of Appeal is being filed with the Patent Trial and Appeal Board, and a copy is being filed electronically with the United States Court of Appeals for the Federal Circuit along with the required docketing fee.

Date: November 11, 2024

Respectfully submitted,

*/Michael P. Chu/*
Michael P. Chu, Lead Counsel
Registration No. 37,112
*Attorneys/Agents for Patent Owner*

**CERTIFICATE OF SERVICE**

I hereby certify, that on November 11, 2024, a complete copy of the foregoing **PATENT OWNER'S NOTICE OF APPEAL** was served upon the following by ELECTRONIC MAIL:

B. Clayton McCraw (Lead counsel)
MAYER BROWN LLP
1221 Avenue of the Americas
New York, NY 10020-1001
Telephone: (212) 506-2649
CMcCraw@mayerbrown.com

Amanda S. Bonner (Back-up Counsel)
MAYER BROWN LLP
71 South Wacker Drive
Chicago, IL 60606
Telephone: (312) 701-8645
asbonner@mayerbrown.com

The undersigned certifies that, in addition to being filed electronically through the Patent Trial and Appeal Board Case Tracking System (P-TACTS) system on November 11, 2024, a true and correct copy of the foregoing **PATENT OWNER'S NOTICE OF APPEAL** was filed on November 11, 2024, with the Director of the United States Patent and Trademark Office at the following e-mail address: efileSO@uspto.gov.

I further certify that a copy of the this Notice of Appeal is being filed via CM/ECF on November 11, 2024, with the U.S. Court of Appeals for the Federal Circuit.

*/Michael P. Chu/*
Michael P. Chu, Lead Counsel
Registration No. 37,112
*Attorneys/Agents for Patent Owner*

# EXHIBIT A

Trials@uspto.gov
571-272-7822

Paper 26
Entered: September 10, 2024

UNITED STATES PATENT AND TRADEMARK OFFICE

---

BEFORE THE PATENT TRIAL AND APPEAL BOARD

---

NESPRESSO USA, INC.
Petitioner,

v.

K-FEE SYSTEM GMBH,
Patent Owner.

---

IPR2023-00502
Patent 10,994,923 B2

---

Before GRACE KARAFFA OBERMANN, JON B. TORNQUIST, and JAMES J. MAYBERRY, *Administrative Patent Judges.*

OBERMANN, *Administrative Patent Judge*.

JUDGMENT
Final Written Decision
Determining All Challenged Claims Unpatentable
*35 U.S.C. § 318(a)*

# I. INTRODUCTION

## *A. Background and Summary*

Nespresso USA, Inc. ("Petitioner") filed a Petition (Paper 1, "Pet.") seeking an *inter partes* review of claims 1–16 of U.S. Patent No. 10,994,923 B2 (Ex. 1001, "the '923 patent"). K-fee System GmbH ("Patent Owner") filed a Preliminary Response. Paper 6. With authorization, Petitioner subsequently filed a Reply to the Preliminary Response (Paper 7, "Prelim. Resp.") to which Patent Owner filed a Sur-reply (Paper 8).

We instituted review of all claims based on the single ground of unpatentability asserted in the Petition. Paper 9 ("Institution Decision" or "Inst. Dec."); *see* Pet. 35 (Petitioner's identification of ground). After institution, Patent Owner filed a Response (Paper 15, "Resp."), Petitioner filed a Reply (Paper 18, "Reply"), and Patent Owner filed a Sur-reply (Paper 19, "Sur-reply"). We held a final hearing on June 12, 2024, and a transcript is in the record. Paper 25 ("Tr.").

We have jurisdiction under 35 U.S.C. § 6. This Final Written Decision is issued pursuant to 35 U.S.C. § 318(a). For the reasons that follow, we determine that Petitioner demonstrates by a preponderance of the evidence that claims 1–16 of the '923 patent are unpatentable.

## *B. Real Parties in Interest*

Petitioner identifies itself, Nestlé USA, Inc., Nestlé Nespresso SA, and Société Des Produits Nestlé SA as the real parties in interest. Pet. 67.

Patent Owner identifies itself as the real party in interest, and notes further that it is "a wholly owned subsidiary of Kruger GmbH & Co. KG, along with Kruger North America, Inc." Paper 3, 2.

*C. Related Matters*

The parties identify the following district court proceeding as a related matter: *K-fee System GmbH v. Nespresso USA, Inc.*, No. 2:22-00525-GW (C.D. Cal.). Pet. 67; Paper 3, 2.

Concurrently with this Decision, we enter a final written decision in IPR2023-00485 ("IPR485"), which involves the same parties and a challenge to U.S. Patent No. 11,230,430 B2, and which shares ancestral patent applications in common with the '923 patent. *Compare* Ex. 1001, code (60), *with* IPR485, Ex. 1001, code (60).

*D. The '923 Patent (Ex. 1001)*

The '923 patent is titled "Portion Capsule Having an Identifier" and issued May 4, 2021, from an application filed June 12, 2019. Ex. 1001, codes (22), (45), (54). We reproduce below Figures 2A and 2B of the '923 patent.

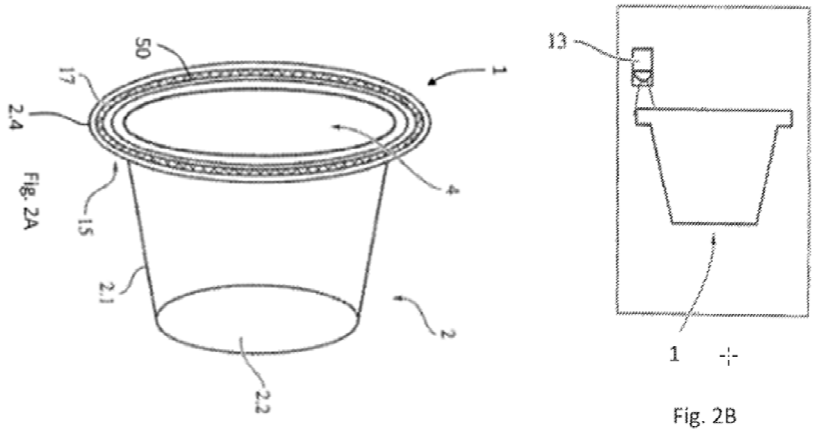


Figures 2A and 2B depict "a portion capsule containing a barcode." *Id.* at 7:31–32.[1] As shown in Figure 2A, portion capsule 1 includes base element 2 with wall region 2.1, bottom area 2.2, and membrane 4. *Id.* at 8:3–

[1] We rotate Figures 2A and 2B by 180 and 90 degrees, respectively, for ease of reference.

5, 8:40–45. Membrane 4 is attached to edge region 2.4 and seals the cavity of the capsule. *Id.* at 8:7–9. Barcode 50 is placed "in the area of the membrane's 4 top surface." *Id*. at 8:43–45. Alternatively, as indicated by arrow 15, the barcode "can be attached to the base element's edge region being averted from the membrane 4." *Id.* at 8:50–53. This barcode is used as an identifier and is read by detector 13 (Figure 2B), which is placed, for example, in a media chute. *Id*. at 8:53–55.

We reproduce below Figures 16A and 17A of the '923 patent.

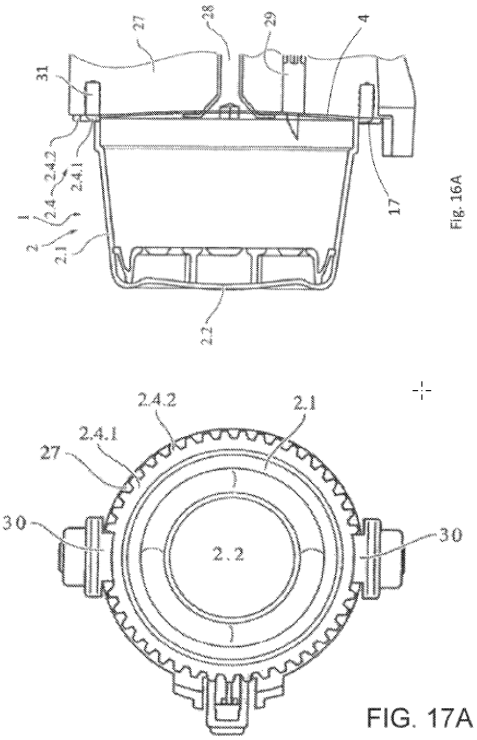


Figure 16A depicts "a portion capsule with a gearwheel placed in the brewing chamber," whereas Figure 17A depicts a different embodiment of the portion capsule of Figure 16A.[2] Ex. 1001, 7:55–58. These figures illustrate "flange 17/edge region 2.4, which is preferably circular" and includes a "means for fit locking, friction locking and/or detection 2.4.2 in

[2] We rotate Figure16A by 90 degrees for ease of reference.

the outer area (outer circumference)." *Id*. at 10:13–18. Figure 17A shows that means 2.4.2 is a gearwheel formed by several recesses/bulges evenly arranged in the edge region of portion capsule 1. *Id*. at 10:18–22. Holding arms 30, also shown in Figure 17A, hold portion capsule 1 in place and interact with means 2.4.2. *Id*. at 10:35–39.

The '923 patent explains that without means 2.4.2 the holding arms will not hold the portion capsule, the portion capsule cannot be inserted into the brewing chamber, and the capsule will instead "fall through it into a dropping box." *Id*. at 10:39–42.

*E. Illustrative Claim*

Petitioner challenges claims 1–16 of the '923 patent. Pet. 1. Claim 1, reproduced below, is illustrative of the claimed subject matter.

> 1. Single-serve capsule for making a beverage, having [1.a][3] a base element made of metal [1.b] with a cavity that is free of a filter, [1.c] and in which a raw beverage material is provided, [1.d] the cavity including radially spaced and vertically oriented ribs, [1.e] the capsule having a flange which is provided on the base element, [1.f] and the cavity being closed by a metal cover, which is fastened on a top side of the flange, [1.g] the base element comprises a wall region extending between the flange and a bottom region of the base element, [1.h] the wall region includes radially spaced and vertically oriented grooves that are free from extending entirely to the bottom region:
>
> > [1.j] wherein the capsule has an identifier, which makes it possible to individualize the respective single-serve capsule, and the identifier is a barcode provided on a bottom side of the flange which is directed away from the metal cover.

Ex. 1001, 12:52–12:67.

[3] The bracketed reference numerals are not in the claim but correspond to Petitioner's identification of the limitations of claim 1. *See* Pet. App'x.

*F. Asserted Ground of Unpatentability*

Petitioner asserts that claims 1–16 of the ’923 patent would have been unpatentable on the following ground.

| Claims Challenged | 35 U.S.C. §[4] | Reference(s)/Basis |
|---|---|---|
| 1–16 | 103 | Yoakim[5], Jarisch[6], Rapparini[7] |

Pet. 35. Petitioner contends that the applied references qualify as prior art under 35 U.S.C. § 102(e). *Id*. at 36–38.

*G. Testimonial Evidence*

The Petition is supported by a declaration of Mr. Michael Jobin. Ex. 1003.

Patent Owner’s Response is supported by declarations of Mr. Marc Krüger (Ex. 2001) and Dr. Laurens Howle (Ex. 2017) as well as deposition testimony of Mr. Jobin (Ex. 2019).

Petitioner’s Reply is supported by (1) deposition testimony of Dr. Howle taken in this and other proceedings (Exs. 1066–1069); (2) declarations of Dr. Howle prepared for other proceedings (Exs. 1070, 1071),

---

[4] The Leahy-Smith America Invents Act (“AIA”), Pub. L. No. 112-29, 125 Stat. 284, 287–88 (2011), amended 35 U.S.C. § 103, effective March 16, 2013. The challenged claims have an earliest effective filing date no later than July 22, 2011. Pet. 39; Resp. 4 & n.3. Accordingly, on this record, we apply the pre-AIA version of § 103. *See* 35 U.S.C. § 100(i)(1)(B).
[5] US 2010/0239734 A1, filed May 7, 2010, and published September 23, 2010. Ex. 1004 (“Yoakim”).
[6] US 2013/0064937 A1, filed May 12, 2011, and published March 14, 2013. Ex. 1005 (“Jarisch”).
[7] US 2012/0269933 A1, filed October 19, 2010, and published October 25, 2012. Ex. 1008 (“Rapparini”).

and (3) deposition testimony of Mr. Jobin taken in another proceeding (Ex. 1072).

## II. ANALYSIS

### *A. Legal Standards*

Petitioner bears "the burden from the onset to show with particularity why the patent it challenges is unpatentable." *Harmonic Inc. v. Avid Tech., Inc.*, 815 F.3d 1356, 1363 (Fed. Cir. 2016) (citing 35 U.S.C. § 312(a)(3) (requiring petitions to identify "with particularity . . . the evidence that supports the grounds for the challenge to each claim")); *see* 37 C.F.R. § 42.104(b) (requiring petitions to identify how the challenged claim is to be construed and where each element of the claim is found in the prior art patents or printed publications relied upon).

A patent claim is unpatentable as obvious if the differences between the claimed subject matter and the prior art are such that the subject matter, as a whole, would have been obvious at the time the invention to a person of ordinary skill in the art. *KSR Int'l Co. v. Teleflex Inc.*, 550 U.S. 398, 406 (2007). We resolve obviousness based on underlying factual determinations including: (1) the scope and content of the prior art; (2) any differences between the claimed subject matter and the prior art; (3) the level of ordinary skill in the art; and (4) when presented, objective evidence of nonobviousness.[8] *Graham v. John Deere Co.*, 383 U.S. 1, 17–18 (1966).

The obviousness analysis typically concerns "whether there was an apparent reason to combine the known elements in the fashion claimed by the patent at issue." *KSR*, 550 U.S. at 418 (citing *In re Kahn*, 441 F.3d 977,

[8] Neither party presents objective evidence of nonobviousness, therefore, we do not address that issue in this Decision.

988 (Fed. Cir. 2006) (requiring "articulated reasoning with some rational underpinning to support the legal conclusion of obviousness")). Petitioner cannot satisfy its burden of proving obviousness by "mere conclusory statements," but "must instead articulate specific reasoning, based on evidence of record, to support the legal conclusion of obviousness." *In re Magnum Oil Tools Int'l, Ltd.*, 829 F.3d 1364, 1380 (Fed. Cir. 2016).

*B. Level of Ordinary Skill in the Art*

The level of ordinary skill in the art at the time of the invention is a factual determination that provides a primary guarantee of objectivity in an obviousness analysis. *Al-Site Corp. v. VSI Int'l Inc.*, 174 F.3d 1308, 1324 (Fed. Cir. 1999) (citing *Graham*, 383 U.S. at 17–18; *Ryko Mfg. Co. v. Nu-Star, Inc.*, 950 F.2d 714, 718 (Fed. Cir. 1991)).

Petitioner, in the Petition, proposes that a person of ordinary skill in the art "would have a bachelor's degree in engineering plus five years of experience in design of mechanical beverage systems, or similar products." Pet. 33 (citing Ex. 1003 ¶ 40). In the Institution Decision, we adopted the slightly different definition proposed by Patent Owner in the Preliminary Response, which mirrors Petitioner's language but adds an additional qualification, namely, "experience with sensors for recognizing an identifier." Dec. 8 (quoting Prelim. Resp. 13).

Neither party timely opposes the definition adopted in the Institution Decision. *See* Resp. 9 (Patent Owner, observing only that the Board adopted Patent Owner's definition in the Institution, without advancing any alternative definition); *see generally* Reply (Petitioner, declining to oppose the definition adopted in the Institution Decision).

We apply in this Decision the same definition that we applied in the Institution Decision, because it is not opposed by either party[9] and is consistent with disclosures in the '923 patent, the asserted prior art, and the declaration testimony of Mr. Jobin. *See* Ex. 1001, code (57) (Abstract), 1:6–25 (description of field and background of the claimed invention); Ex. 1004, code (57) (Abstract), ¶¶ 2–13 (description of field and background Yoakim's invention); Ex. 1005, code (57) (Abstract), ¶¶ 1–13 (introduction and background of Jarisch's invention); Ex. 1008, code (57) (Abstract), ¶¶ 1–7 (state of the art pertaining to Rapparini's invention); *see also* Ex. 1003 ¶ 40 (Mr. Jobin's testimony).

A person of ordinary skill in the art at the time of the invention would have possessed "a bachelor's degree in engineering *plus five years of experience in design of mechanical beverage systems, or similar products, as well as experience with sensors for recognizing an identifier*." Dec. 8 (quoting Prelim. Resp. 13) (Board's emphasis).

---

[9] We reject as untimely Patent Owner's assertion, advanced for the first time in the Sur-reply, that "[a]dditional education might substitute for some of the [design] experience." Sur-reply 2 n.2. Patent Owner waived that argument by failing to raise it in the Response. *See* Dec. 35 (placing Patent Owner on express notice that the Board will deem as waived any issue not timely raised in the Response); Resp. 9 (declining to timely raise this proposed modification to the definition of the level of ordinary skill in the art). Allowing Patent Owner to raise this new issue for the first time in the final brief filed would prejudice Petitioner. *See Genzyme Therapeutic Prods. Ltd. v. Biomarin Pharm. Inc.*, 825 F.3d 1360, 1366–1367 (Fed. Cir. 2016) (the Administrative Procedure Act and due process require notice to a party and the opportunity to submit facts and argument).

*C. Weight Accorded to Conflicting Opinion Testimony*

Petitioner submits that Patent Owner's witness, Dr. Howle, lacks the minimum qualification of the ordinarily skilled artisan related to at least "five years of experience in design of mechanical beverage systems, or similar products, as well as experience with sensors for recognizing an identifier." Dec. 8; *see* Resp. 9 (declining to dispute that such experience is a minimum qualification of an ordinarily skilled artisan); Reply 26–27 (Petitioner's arguments on point). Based on the full trial record, we agree.[10]

For the past 35 years, Dr. Howle has held academic roles at Duke University, first as a graduate-level research assistant, then as a professor in the Department of Mechanical Engineering. Ex. 2017, App'x 1–2. Prior to his time at Duke, Dr. Howle was employed for seven years by Kaye Products, where his duties related to physical therapy equipment. *Id*. ¶ 3. Before that, he served for four years in the United States Army. *Id*., App'x 1.

Dr. Howle readily admits he lacks five years of experience designing mechanical beverage systems. Ex. 1069, 53:15–18. Yet Dr. Howle does not explain sufficiently, if at all, how any related design experiences, in the aggregate, add up to "*at least five years* of experience in design of . . . similar products." Dec. 8 (Board's emphasis); *see* Ex. 2017 ¶¶ 2–13, App'x 1–3 (statement of qualifications and experience). Dr. Howle simply

[10] The Board previously determined, under similar facts and circumstances, that Dr. Howle does not possess the minimum level of ordinary skill in the art because he lacks "five years of experience in design of mechanical beverage systems, or similar products, as well as experience with sensors for recognizing an identifier" and, on that basis, is not qualified to opine about the understanding of the ordinarily skilled artisan. IPR2022-01574 ("IPR574"), Paper 29 at 22; *see id*. at 16–23 (establishing the factual similarity between IPR574 and this proceeding).

identifies experiences, which may or may not have been related to the design of similar products, then asserts, in conclusory fashion, that he qualifies as an ordinarily skilled artisan. *Id*. ¶¶ 2–13; *see especially id*. ¶ 14. We assign that conclusory statement little weight because the statement is not explained or supported adequately by objective evidence. *Id*. ¶ 14.

None of the experiences identified by Dr. Howle are self-explanatory; that is, none, on their face, support a conclusion that his experiences, in the aggregate, amount to "at least five years" (Dec. 8) of experience designing products similar to mechanical beverage systems. *See id*. ¶¶ 2–13. Dr. Howle identifies a single experience as "[d]irectly related to single-serve beverage brewing systems," but that qualification is outside the realm of design: It relates to his experiences consulting as an expert witness in litigation. *Id*. ¶ 13. In a nutshell, Dr. Howle does not attempt to account for how his experiences add up to "at least five years" designing products "similar" to mechanical beverage systems. Dec. 8.

Dr. Howle's research interests include, for example, decompression sickness and oxygen toxicity, and do not, on their face, support a finding that he spent at least five years designing beverage brewing systems or similar products. *Id*., App'x 2–3 (statement of research interests). Similarly, Dr. Howle's peer-reviewed publications reflect a distinct focus on marine mammal science, such as lift and drag performance of whale flippers. *Id*., App'x 6. Patent Owner does not direct us to information from which we can determine whether Dr. Howle possesses at least five years of experience in the design of mechanical beverage systems or similar products. *See* Reply

26–27 (Petitioner's arguments); Sur-reply 1–5 (Patent Owner's arguments[11]).

In the Sur-reply, Patent Owner for the first time argues that Dr. Howle's "educational experiences" are "a substitute for" the required "design experience." Sur-reply 2 n.2. We reject that argument because Patent Owner failed to timely contest its own proposed definition of the ordinarily skilled artisan in the Response and, as a result, Petitioner was denied an opportunity to brief this new issue raised for the first time in the Sur-reply. *See supra* n.9. Patent Owner's own proposed definition, advanced in the Preliminary Response and adopted in the Institution Decision, expressly distinguishes educational experiences from hands-on design experience. Dec. 8 (accepting Patent Owner's proposed definition) (quoting Prelim Resp. 13). The time for advocating for a different definition was on the date of filing the Response. *See* Resp. 9 (declining to do so).

In the Sur-reply, Patent Owner also contends for the first time that Dr. Howle's work with devices, such as heaters, pumps, and gauges, represents "experience in mechanical design including design of components used in mechanical beverage systems, and design of ***similar products***." Sur-reply 2 (Patent Owner's emphasis). Patent Owner does not explain how these experiences together add up to "at least five years" of designing products similar to mechanical beverage systems as well as "experience with sensors for recognizing an identifier." Dec. 8; *see* Sur-reply 2–4 (providing a survey of Dr. Howle's qualifications, including work plainly outside the

[11] That Dr. Howle was deemed qualified, "without objection," in district court actions does not compensate for his failure to establish his qualifications under the definition proposed by Patent Owner in this forum, where his qualifications are contested. Sur-reply 4.

realm of such design experiences, but declining to address how those qualifications include *at least five years* of relevant design experience) (citing Ex. 1066, 34:16–35:9; Ex. 1067, 101:3–18, 101:19–102:11, 102:20–104:9; Ex. 1068, 6:3–12; Ex. 1069; Ex. 2017 ¶¶ 3–6, 8–10, 13) (Patent Owner's evidence).

Patent Owner's attempt to establish Dr. Howle's qualifications in the Sur-reply, based on re-direct examination taken by Patent Owner during Petitioner's deposition of Dr. Howle, is too little too late. Sur-reply 3 (citing Ex. 1067, 102:20–104:9). Specifically, Petitioner avers in the Sur-reply, for the first time, that "Dr. Howle [ ] has extensive experience with medical devices, which utilize" components that "operate similarly to beverage machines." *Id*. Even if we consider that belated argument, however, it does nothing to establish that Dr. Howle possesses, in the aggregate, "at least five years" of relevant design experience. Dec. 8; *see* Sur-reply 3 (citing Ex. 1066, 34:16–35:9; Ex. 1067, 101:3–12, 102:30–104:9; Ex. 2017 ¶¶ 3, 4) (declining to address the duration of Dr. Howle's allegedly relevant design experience).

Further, by raising that contention for the first time in the Sur-reply, Patent Owner unfairly denies Petitioner an opportunity to oppose the contention with facts and evidence. *See Genzyme Therapeutic Prods.*, 825 F.3d at 1366–1367 (Fed. Cir. 2016) (Administrative Procedure Act and due process require notice and opportunity to submit facts and argument). The evidence filed in support of Patent Owner's Response does not indicate that Dr. Howle possesses design experience with medical devices. Ex. 2017 ¶¶ 2–13, App'x A. Patent Owner's attempt to introduce this alleged experience in the Sur-reply, in the first instance, is improper and prejudicial to Petitioner's ability to effectively respond with facts and evidence.

In other words, even if we accept that Dr. Howle has some experience designing medical devices and components, and that those experiences represent work designing products similar to mechanical beverage systems, Patent Owner fails to direct the Board to evidence sufficient to establish that this experience, in the aggregate, amounts to "at least five years" or involved "experience with sensors for recognizing identifiers." Dec. 8 (adopting Patent Owner's own proposed definition of ordinary skill in the art); *see* Sur-reply 3 (citing Ex. 1066, 34:16–35:9; Ex. 1067, 101:3–12, 102:30–104:9; Ex. 2017 ¶¶ 3, 4) (failing to establish adequately, if at all, how Dr. Howle's qualifications include the requisite minimum five-year period of relevant design experience). Accordingly, we determine that Dr. Howle is not qualified to offer expert testimony from the perspective of a person having ordinary skill in the art in this proceeding.[12] *Kyocera Senco Indus. Tools Inc. v. Int'l Trade Comm'n*, 22 F.4th 1369, 1376–78 (Fed. Cir. 2022).

The Federal Circuit has made plain that, "[t]o offer expert testimony from the perspective of a skilled artisan in a patent case," including the issue of patent "validity," the "witness *must* at least have ordinary skill in the art."

---

[12] To be clear, we are not saying that a witness supplying expert opinions must have satisfied the requirements of the level of ordinary skill in the art on or before the priority date of the challenged patent, which Patent Owner seems to understand. *See* Sur-reply 4–5. Instead, we evaluate whether Dr. Howle had at least the requisite qualifications of a person having ordinary skill in the art by the time he rendered his opinions. *Osseo Imaging, LLC v. Planmeca USA, Inc.*, Appeal No. 2023-1627, slip op. at 7 (Fed. Cir. Sept. 4, 2024) ("[A]n expert can acquire the necessary skill later and develop an understanding of what a person of ordinary skill knew at the time of the invention," however, where "the expert was not a person of ordinary skill at the time of the invention may well be used during cross-examination to undermine the credibility of the expert."); *see id.*, slip op. at 5–6 (affirmatively quoting *Kyocera*).

*Id*. (Board's emphasis). "Without that skill, the witness'[s] opinions are neither relevant nor reliable." *Id.* at 1377. "'Admitting testimony from a person . . . with no skill in the pertinent art serves only to cause mischief and confuse the factfinder.'" That testimony would 'amount[ ] to nothing more than advocacy from the witness stand.'" *Id.* (quoting *Sundance, Inc. v. DeMonte Fabricating Ltd.*, 550 F.3d 1356, 1362, 1364–65 (Fed. Cir. 2008)).

Alternatively, even if we accept that Dr. Howle possesses "at least five years" of relevant design experience, on this record, we agree with Petitioner that his opinions are entitled to less weight than those of Petitioner's witness, Mr. Jobin. Reply 27. Unlike Dr. Howle, Mr. Jobin is a designer by profession, with more than 30 years of industry experience. Reply 27 (citing Ex. 1003 ¶¶ 5–30). For example, Mr. Jobin designed a home-based beer dispensing system utilizing cartridge identification technologies. *Id*. (citing Ex. 1003 ¶ 24). Mr. Jobin also "has substantial experience with sensors for recognizing identifiers." *Id*. (citing Ex. 1003 ¶ 19; Ex. 1072, 3712–19, 67:22–70:19). Dr. Howle, by contrast, "has never designed a beverage machine." Reply 22; *see generally* Sur-reply (declining to contest that assertion).[13]

---

[13] Dr. Howle's experience with mechanical beverage systems is limited to consulting as a witness in patent litigation. Reply 26; Sur-reply 4 (averring that Dr. Howle has "testified at trial in seven cases related to single-serve beverage brewing systems") (citing Ex. 2017 ¶ 13). Under the particular and unique facts presented on this record, including Patent Owner's extensive arguments about the asserted difficulties surrounding the proposed modification of Yoakim's device to include the identifier location disclosed in Jarisch (Sur-reply 5–12), we find Dr. Howle's testimony, grounded in testifying as a litigation witness, less persuasive that Mr. Jobin's testimony, grounded in 30 years as a mechanical systems designer.

Dr. Howle possesses excellent credentials as a professor in the general field of mechanical engineering, but his relevant design experience is sparse and insubstantial compared to Mr. Jobin. *Compare* Ex. 1003 ¶¶ 5–30, App'x A*, with* Ex. 2017 ¶¶ 1–15, App'x A. Therefore, even if we assign some weight to Dr. Howle's opinions, where they conflict with those of Mr. Jobin, we assign Mr. Jobin's testimony "more weight." Reply 27.

*D. Claim Construction*

Claim terms are given their ordinary and customary meaning, as understood by one of ordinary skill in the art in the context of the entire disclosure. *In re Translogic Tech., Inc*., 504 F.3d 1249, 1257 (Fed. Cir. 2007). We construe only terms in controversy, and then only to the extent necessary to resolve the controversy. *Nidec Motor Corp. v. Zhongshan Broad Ocean Motor Co.*, 868 F.3d 1013, 1017 (Fed. Cir. 2017).

Petitioner asserts, and Patent Owner does not contest, that "no claim terms require formal construction." Pet. 35; *see* Resp. 9 (observing only, as to claim construction, that the Board "determined that no claims require express construction" in the Institution Decision) (citing Inst. Dec. 7). We agree with the parties that no claim term requires express construction for purposes of this Decision.

*E. Whether Jarisch is Prior Art to the '923 Patent*

The '923 patent claims priority to a series of United States patent applications, the earliest of which was filed July 22, 2011. Ex. 1001, code (60). The '923 patent also claims priority to three German patent applications. *Id.* at code (30). The first German priority application was filed July 22, 2010 ("first German priority application"), the second German priority application was filed September 2, 2010 ("second German priority

application"), and the third German priority application was filed February 7, 2011 ("third German priority application"). *Id.*

Jarisch was filed May 12, 2011, and published March 14, 2013. Ex. 1005, codes (22), (43); Pet. 35. To the extent the '923 patent is not entitled to receive the benefit of the priority date of one or more of the three German priority applications, Petitioner contends that Jarisch is prior art to the challenged claims under at least 35 U.S.C. § 102(e). Pet. 37, 39–40.

Patent Owner responds that multiple Examiners continue "to affirm Patent Owner's entitlement to the priority date of its German priority applications" and that, alternatively, it is able to "swear behind" Jarisch to remove it as prior art. Resp. 10–11. We address those disputed issues below.

*1. Priority Date*

*a) Legal Framework for Priority*

"It is elementary patent law that a patent application is entitled to the benefit of the filing date of an earlier filed application only if the disclosure of the earlier application provides support for the claims of the later application, as required by 35 U.S.C. § 112." *In re Chu*, 66 F.3d 292, 297 (Fed. Cir. 1995). One may show support for the claims of a later application by showing that a single, earlier application provides written description support for the claims. *PowerOasis, Inc. v. T-Mobile USA, Inc.*, 522 F.3d 1299, 1306 (Fed. Cir. 2008); *Studiengesellschaft Kohle, MBH v. Shell Oil Co.*, 112 F.3d 1561, 1564 (Fed. Cir. 1997) (patentee "cannot show possession of an invention based upon a combination of several distinct previous applications").

Once Petitioner identifies a prior art reference with an effective filing date prior to that of the challenged patent, the burden of production to show entitlement to the benefit of the filing date of an earlier filed application

shifts to Patent Owner. *See In re NTP*, 654 F.3d 1268, 1276 (Fed. Cir. 2011) ("a patent's claims are not entitled to an earlier priority date merely because the patentee claims priority . . . Rather, for a patent's claims to be entitled to an earlier priority date, the patentee must demonstrate that the claims meet the requirements of 35 U.S.C. § 120"). Patent Owner may show possession of the invention through "such descriptive means as words, structures, figures, diagrams, formulas, etc., that fully set forth the claimed invention." *Lockwood v. Am. Airlines, Inc.*, 107 F.3d 1565, 1572 (Fed. Cir. 1997). "Although the exact terms need not be used *in haec verba*, . . . the specification must contain an equivalent description of the claimed subject matter. A description which renders obvious the invention for which an earlier filing date is sought is not sufficient." *Id.*

*b) Analysis*

*(1) Petitioner's Arguments*

Petitioner contends that no single German priority application discloses the subject matter of independent claims 1 or 9 of the '923 patent. Pet. 40. Petitioner also contends the third German priority application is the only application that discloses the vertical grooves and ribs required by each challenged claim, yet fails to disclose other features of the claimed invention, specifically, a barcode, a barcode on the bottom side of the flange, or a capsule made of metal. *Id.*; *see* Ex. 1001, 12:52–67, 13:24–14:8 (claims 1 and 9, the independent challenged claims)

In addition, Petitioner asserts that the first and second German priority applications disclose a barcode, but not the claimed grooves and ribs. *Id.* at 41. As no single German priority application provides written description support for any challenged claim, Petitioner contends that Jarisch is prior art to the '923 patent at least under 35 U.S.C. § 102(e). *Id.* at 37, 42.

*(2) Patent Owner's Counterarguments*

Patent Owner raises two counterarguments. The first relates to whether the Office previously determined that any single priority document demonstrates possession of the claimed invention. Resp. 10–11. The second relates to whether Patent Owner is able to "swear behind" Jarisch. *Id*. at 11.

*(3) No Single Priority Document*

Patent Owner argues that the priority dispute, including whether any single priority document demonstrates adequately a prior possession of the claimed invention, was resolved during prosecution. Resp. 10–11. Somewhat relatedly, Patent Owner submits that Petitioner "does not challenge the fact that each and every limitation of the '923 [p]atent claims was conceived of, possessed by the inventor, or is disclosed in the three German priority documents." *Id*. at 11.

We are not persuaded that any Examiner finding on the priority issue is determinative in this proceeding. *See* Resp. 11 (Patent Owner's argument on point). Patent Owner identifies no analysis or determination by any Examiner explaining how or why the '923 patent claims are supported by the disclosure of any single German priority application. *Id*.

To obtain the benefit of the filing date of an earlier application, Patent Owner bears the burden of producing evidence to establish where each limitation of the challenged claims is disclosed in a single priority application. *Studiengesellschaft Kohle*, 112 F.3d at 1564; *NTP*, 654 F.3d at 1276. Petitioner identifies limitations of the challenged claims that are missing from each individual German priority application. Pet. 39–42. Patent Owner responds with no evidence or arguments suggesting that the identified limitations are disclosed in a single application. Resp. 10–12.

On this record, no challenged claim is entitled to the benefit of the filing date of any of the three German priority applications; therefore, Jarisch qualifies as prior art under at least 35 U.S.C. § 102(e).

*2. Patent Owner's Ability to "Swear Behind" Jarisch*

Mr. Marc Krüger is the sole named inventor of the claimed invention. Ex. 1001, code (72). Patent Owner advances the Declaration of Mr. Krüger (Ex. 2001) in an effort to "swear behind" Jarisch, thereby removing its status as prior art against the challenged claims.[14] Resp. 11; 37 C.F.R. § 1.131. By way of support, Patent Owner directs us to the "evolution of Mr. Krüger's inventions over a short period of time," as evidenced by the three German priority applications and Mr. Krüger's declaration testimony. *Id*. at 15.

Mr. Krüger testifies he "was in possession of at least as much of the subject matter as relied upon by Petitioner from the Jarisch reference, before the effective date of Jarisch." *Id.* at 14; Ex. 2001 ¶¶ 13–17 (Mr. Krüger citing to disclosures of the first German priority application of placing a barcode on a capsule and comparing this identifier to a stored identifier to adjust the brewing conditions). In Patent Owner's view, it may "swear behind" Jarisch merely by demonstrating that the inventor had possession of so much of the claimed subject matter as is disclosed in the reference in question. Resp. 11–12. In Patent Owner's further view, "[t]he species that is disclosed by the first German application and Mr. Krüger's declaration would have at least rendered the specific elements of the species disclosed

[14] On its face, Jarisch is prior art to the '923 patent under 35 U.S.C. § 102(b). As such, absent Patent Owner demonstrating entitlement to the benefit of the filing date of the priority application filed July 22, 2011, Jarisch could not be sworn behind. For purposes of this Decision we assume, without deciding, that Patent Owner is entitled to the benefit of the filing date of the priority application filed July 22, 2011.

by Jarisch — a code under the flange of a capsule — obvious from the perspective of a person having ordinary skill in the art." *Id*. at 17.

We are not persuaded that Mr. Krüger's statements, which indicate he was in possession of one feature of the claimed subject matter, namely, "a code under the flange of a capsule," is sufficient to swear behind Jarisch. *Id*. The United States Court of Customs and Patent Appeals addressed the situation where a patent application claimed both a species and a genus and a prior art reference disclosed the same species claimed in the application but not the broader claimed genus. *In re Stempel*, 241 F.2d 755, 759 (CCPA 1957). In that case, the inventor filed multiple affidavits demonstrating that he had, prior to the publication of the prior art reference, conceived and reduced to practice the same species disclosed in the asserted reference. *Stempel*, 241 F.2d at 756–757. The question before the court was:

> When a domestic patent discloses only a single species of an invention and the applicant submits an affidavit under Rule 131 showing completion of the invention of that species prior to the effective date of the reference (which does not claim it), can that reference be used as the basis of the rejection of generic claims in the application?

*Id.* at 757. In concluding that the reference could not be the basis of the rejection of the generic claims, the court commented that, to remove the reference as prior art, "all the applicant can be required to show is priority with respect to so much of the claimed invention as the reference happens to show. When he has done that he has disposed of the reference." *Id.* at 759.

Patent Owner contends that, under *Stempel*, all it must show through the declaration of Mr. Krüger is that the inventor conceived and reduced to practice that part of the subject matter, disclosed in Jarisch, which is relied upon in the Petition; that is, placing a code under the flange of a capsule—

without showing possession of a device that actually reads on the patent claims. Resp. 11–14. We disagree. Although the language of *Stempel* could possibly be read as broadly as Patent Owner advocates, the same court in *In re Tanczyn* later found it "necessary to comment on and to restrict somewhat certain broad language in Stempel," including the language relied upon by Patent Owner in this case. *In re Tanczyn*, 347 F.2d 830, 832 (CCPA 1965).

The court there observed that it "never intended by the language used in *Stempel* to authorize the overcoming of references by affidavits showing that the applicant had invented, prior to the reference date, a part, some parts, or even a combination of parts . . . where the part or parts are not within the scope of the claims being sought." *Id.* at 833. Rather, to "swear behind" a reference, "in addition to showing what the [prior art] reference shows," the affidavit also must establish "possession of either the whole invention claimed, or something falling within the claim, in the sense that the whole claim reads on it." *Id.* Patent Owner's counterview, that it is enough to show that "a code under the flange of a capsule" would have been obvious in view of the first German priority application, runs counter to the well-established rule that, for purposes of establishing priority, the critical showing is possession of the claimed invention (not merely some part of the invention). Resp. 15–18.[15]

---

[15] We decline Patent Owner's invitation to apply *In re Clarke*, 356 F.2d 987, 989–992 (CCPA 1966) in a manner that would circumvent the applicable principles in *In re Tanczyn*. Resp. 17. Nothing in *In re Clarke* discharges Patent Owner's burden of showing prior possession of "something falling within the claim," or indicates the sufficiency of showing merely a possession of "some parts" of the invention, such as "a code under the flange of a capsule." *In re Tanczyn*, 347 F.2d at 833; Resp.17.

Patent Owner and Mr. Krüger attempt only to show that placing a barcode under the flange was conceived of and reduced to practice prior to the publication of Jarisch. *Id*. Such a disclosure does not read on the challenged claims, which require, *inter alia*, a capsule made of metal, a barcode under the flange, and a wall region that includes radially spaced and vertically oriented grooves that are free from extending entirely to the bottom region. Ex. 1001, 12:52–67. Although Mr. Krüger submits that the three German priority applications show "the evolution of" his "inventions over a short period of time," none of those applications are shown on this record to demonstrate possession of the claimed invention, specifically, the combination of capsule features together in the manner claimed. Resp. 15. Accordingly, on this record, Patent Owner fails to "swear behind" Jarisch.[16]

*3. Conclusions*

For the reasons set forth above, we determine that Patent Owner has not carried its burden of production to show that any single German priority application provides written description support for the challenged claims.

---

[16] The holding in *In re Tanczyn* has been clarified by subsequent decisions of the court. For example, in *In re Spiller* the court reasoned that a prior art disclosure could be removed as a reference even though it would not literally read upon the claim, where the missing limitations would have been obvious to an ordinarily skilled artisan, and Appellant has demonstrated possession of that invention. *See In re Spiller*, 500 F.2d 1170, 1177 (CCPA 1974). Patent Owner, by contrast, does not argue, much less demonstrate, that the limitations missing from Jarisch would have been obvious to a person of ordinarily skill in the art. Resp. 10–19. At best, Patent Owner contends that a species disclosed in the first German priority application, combined with information from Mr. Krüger's declaration, "would have at least rendered" obvious "a code under the flange of the capsule." *Id*. at 17. Patent Owner stops short of attempting to demonstrate obviousness of the other limitations of the invention, which admittedly are missing from Jarisch. Resp. 15–18.

Patent Owner also fails to successfully "swear behind" Jarisch to remove it as a prior art reference. Accordingly, we apply Jarisch as prior art to the claims of the '923 patent.

*F. Assessment of the Sole Patentability Challenge*

Petitioner challenges claims 1–16 as obvious over the combined disclosures of Yoakim, Jarisch, and Rapparini. Pet. 35, 43–66. As a matter separate from its attempt to "swear behind" Jarisch, Patent Owner also opposes the merits of the challenge, should we determine that Jarisch qualifies as prior art. Resp. 19–45.

We begin our assessment of the challenge with an overview of the asserted prior art references. We then resolve whether Petitioner shows by a preponderance of the evidence that the subject matter of claims 1–16 would have been obvious over the combined disclosures of those references.

*1. Yoakim (Ex. 1004)*

Yoakim is titled "Method for Preparing a Beverage or Food Liquid and System Using Brewing Centrifugal Force" and published September 23, 2010, from an application filed May 7, 2010. Ex. 1004, codes (54), (43), (22). Yoakim "relates to a capsule, device, system and method for preparing a beverage or food liquid from a food substance which is brewed or extracted by using centrifugal forces exerted on a capsule which contains the substance." *Id.* ¶ 2.

Yoakim's beverage-preparation device includes a sensor, which is provided to read an identifier used to select predetermined parameters for a particular capsule. *Id.* ¶ 25. For example, "a capsule recognition system" may "recognize the types of capsules, i.e., espresso, lungo, cappuccino, long coffee (e.g., 180–400 ml), latte, tea, etc., and . . . adjust the speed and/or

other brewing parameters (e.g., water temperature)" based on the type of capsule inserted into the device. *Id.* ¶ 192. The identifier may be a code on the capsule, "such as a color, a barcode, an RFID, a magnetic code, ferromagnetic micro-wires or labels, shapes and combinations thereof." *Id.*; *see also id*. ¶ 496 (reiterating that the identification means may be in the form of a "barcode"). Yoakim does not indicate exactly where the identifier is located, except to suggest that it is placed on the capsule. *Id*. ¶¶ 487, 496.

We reproduce below Yoakim's Figure 1.

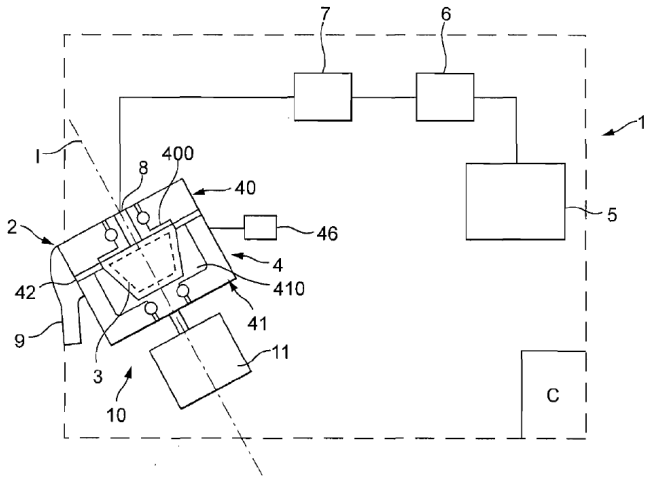


FIG. 1

Figure 1 depicts "a schematic representation of [Yoakim's] system." Ex. 1004 ¶ 30. System 1 includes device 2 and capsule 3, with device 2 having brewing module 4 that receives capsule 2 for brewing. *Id.* ¶ 180. Module 4 is connected to water reservoir 5, with the water delivered to module 4 by low pressure pump 6. *Id.* Water heater 7 heats the water to the desired temperature for the capsule. *Id.* After brewing is complete, the capsule is removed and discarded. *Id.*

We reproduce below Figures 6 and 27 of Yoakim.

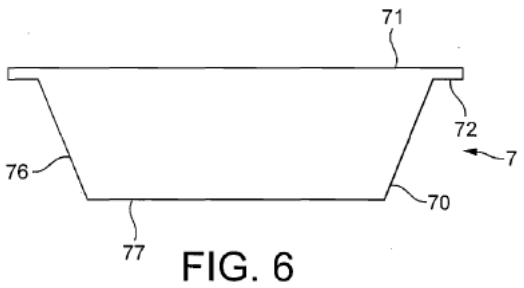


FIG. 6

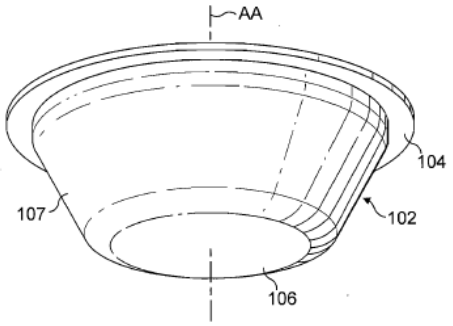


FIG. 27

Figure 6 depicts a sealed capsule that can be used in the invention and Figure 27 is a perspective view from below of the capsule of the invention. *Id.* ¶¶ 35, 56. In Figure 6, capsule 7 comprises a cup-shaped body 70 having upwardly oriented sidewall 76 and a bottom wall 77. *Id.* ¶ 197. "The body terminates by an upper edge 72 raising outwards onto which is sealed a lid 71," which may be "a flexible pierceable membrane of several microns in aluminum and/or plastic." *Id*.

In Figure 27, the capsule comprises a dished body 102, onto which sealing foil 103 (not shown) is sealed to peripheral rim 104 of the body. *Id.* ¶ 414. Yoakim explains that "rim 104 can extend outwards forming a small annular portion, e.g., of about 2–5 mm." *Id*.

*2. Jarisch (Ex. 1005)*

Jarisch is titled "Capsule, System and Method for Preparing a Beverage by Centrifugation" and published March 14, 2013 from an application filed May 12, 2011. Ex. 1005, codes (22), (43), (54). Jarisch is directed to the preparation of a beverage using a capsule and, in particular, "focuses on the detection of the capsule." *Id.* ¶ 1.

Jarisch notes that various prior art methods have been disclosed for identifying a capsule using a code, but proposes "an improved way to identify the capsule within a beverage production machine." *Id.* ¶¶ 4–14. In

a preferred embodiment, a "bit code" is used to identify the capsule and "is present on the bottom of the rim of the capsule which is opposed to the lid of the capsule." *Id.* ¶¶ 17, 22. Jarisch explains that this position is preferable because the bottom of the rim "is sufficiently away from the liquid injection and beverage delivery areas so that there is a lower risk for the code to become unreadable . . . [due to] beverage residues." *Id*.

*3. Rapparini (Ex. 1008)*

Rapparini is titled "Filtering and Permeable Container for Substances Suitable for the Preparation of Beverages" and published October 25, 2012 from an application filed October 19, 2010. Ex. 1008, codes (22), (43), (54).

Rapparini discloses a portion capsule that holds substances for preparing beverages such as coffee. *Id*. ¶ 8. Rapparini's invention pertains to a beverage container that includes "longitudinal stiffening ribs" of variable length. *Id*. at code (57) (Abstract); *see id*. ¶¶ 52, 53. Rapparini explains that these ribs beneficially allow "optimization of the stability of the container." *Id*. ¶ 9. We reproduce below Figures 6 and 6 bis, which illustrate ribs of varying length on the body of Rapparini's container.

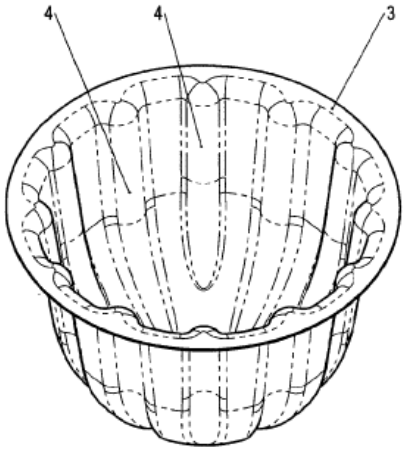


FIG. 6

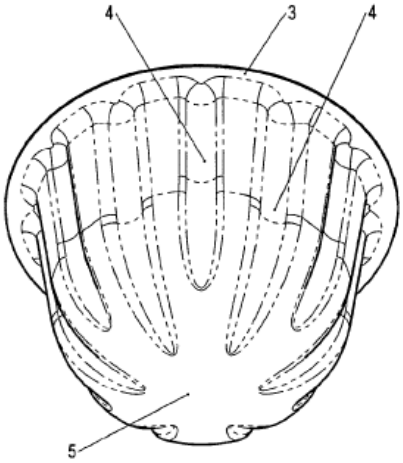


FIG. 6 bis

Figures 6 and 6 bis illustrate 3D views of, respectively, the inner and outer regions of Rapparini's container, including annular rim 3 and longitudinal stiffening ribs 4, wherein ribs 4 have variable lengths along the surface of the body of the container. *Id*. ¶¶ 10, 11, 31, 32, 52, 53. In particular, "long and short ribs are alternated along the surface of the body," with "long ribs extending at least partially in the bottom region of the container alternated to short ribs extending only along the side region of the container." *Id*. ¶ 11.

*4. Petitioner's Showing of Obviousness*

Petitioner identifies with particularity disclosures in the prior art that teach or suggest each feature of the claimed invention. Pet. 49–66. Petitioner also provides well-supported reasons why an ordinarily skilled artisan would have been led to combine the features of the prior art in the manner claimed with a reasonable expectation of success. *Id*. at 43–49.

In the analysis that follows, we explain in detail why we determine that Petitioner carries its burden of proving that the subject matter of each challenged claim would have been obvious over the applied prior art.

*a) Claim 1*

*(1) Preamble*

The preamble of claim 1 recites a "[s]ingle-serve capsule for making a beverage." Ex. 1001, 12:52.

We need not resolve whether the preamble is limiting: Regardless of whether it is limiting, Yoakim teaches this feature by disclosing "exemplary capsules" and "details" for making a single beverage. Pet. 49; *see* Ex. 1004, Figs. 6 and 27 (reproduced *supra* 26), ¶¶ 2, 180, 197, 219, 414; *see also* Ex. 1003 ¶¶ 206–209 (Dr. Jobin's declaration testimony). Patent Owner does not contest this issue. Resp. 19–45.

*(2) Element 1[a]*[17]

Claim 1 specifies "a base element made of metal." Ex. 1001, 12:53. Yoakim teaches a cup-shaped body optionally made of "metal" such as "thin aluminum." Pet. 49; Ex. 1004 ¶¶ 129, 210–212, 214, 461. Patent Owner does not contest this issue. Resp. 19–45.

*(3) Element 1[b]*

Claim 1 requires "a cavity that is free of a filter." Ex. 1001, 12:53–54. Yoakim indicates that a filter is optional and, thereby, at minimum suggests "a cavity that is free of a filter." Pet. 50; *see* Ex. 1004 ¶ 171 ("An additional filtering layer can be used to filter the liquid depending on the size of the outlets."), ¶¶ 288, 461 (additional supporting disclosures in Yoakim).

Further, "Yoakim expressly discloses embodiments using portion capsules that do not have a filter" disposed inside the cavity, as illustrated, for example, in Figure 16 of the reference. Pet. 50 (citing Ex. 1004, Figs. 42, 54; Ex. 1003 ¶¶ 213–216); *see* Reply 9 and n.2 (citing Ex. 1004, Fig. 16, ¶¶ 45, 210).

Patent Owner contests the sufficiency of Petitioner's showing with respect to this limitation of claim 1. Resp. 20–27. We resolve whether Petitioner shows sufficiently that Yoakim suggests "a cavity that is free of a filter" in our analysis of contested issues. Ex. 1001, 12:53–54.

*(4) Element 1[c]*

Claim 1 further specifies "a raw beverage material is provided." Ex. 1001, 12:54. Yoakim discloses a capsule that may contain "ground

[17] Here again, we refer to bracketed reference numerals that Petitioner adds to claim 1. *See* Pet. App'x; *see also supra* n.3.

coffee, soluble coffee," or "tea." Pet. 50 (quoting Ex. 1004 ¶ 198). Patent Owner does not contest this issue. Resp. 19–45.

*(5) Element 1[d]*

Claim 1 specifies a "cavity including radially spaced and vertically oriented ribs." Ex. 1001, 12:55. In connection with this limitation, Petitioner for the first time turns to the disclosure of Rapparini. *See* Pet. 50. Like Yoakim, "Rapparini discloses a portion capsule that holds substances for preparing beverages such as coffee." Ex. 1008 ¶ 8. Unlike Yoakim, Rapparini discloses a capsule that includes "longitudinal stiffening ribs wherein the length of the ribs is variable along the surface of the body." Ex. 1008 ¶ 9; Pet. 51 (citing Ex. 1003 ¶¶ 220, 221; Ex. 1008 ¶¶ 7, 9, 53, 54).

As shown in Figures 6 and 6 bis, reproduced *supra* 27, "Rapparini's ribs are 'vertically oriented' and radially spaced on the inside cavity." Pet. 51 (citing Ex. 1003 ¶ 222). Petitioner submits, and Patent Owner does not contest, that an ordinarily skilled artisan would have been led to modify Yoakim's capsule to include Rapparini's ribs "for the predictable benefit of greater stability of the capsule body wall." *Id*. at 46 (citing Ex. 1003 ¶ 196); *see* Resp. 36–45 (Patent Owner's arguments opposing Petitioner's rationale to combine, nowhere contesting this particular factual proposition).

*(6) Element 1[e]*

Petitioner turns back to Yoakim for disclosure of the limitation of claim 1 that specifies a capsule having "a flange which is provided on the base element." Ex. 1001, 12:56–57; *see* Pet. 51.

Yoakim's cup-shaped body is provided "with a flange that" extends from the "base element" as shown in Figures 6, 7, 26 and 27 of the reference. Pet. 51 (citing Ex. 1003 ¶¶ 225–228; Ex. 1004, Figs. 6, 7, 26, 27,

¶¶ 129, 197, 414); *see id*. at 52 (citing and reproducing Ex. 1004, Figs. 6 and 27); *see also supra* 26 (reproducing Yoakim's Figures 6 and 27, which illustrate, respectively, flange 72 and flange 104). Patent Owner does not contest that Yoakim discloses the flange limitation of claim 1. Resp. 19–45.

*(7) Element 1[f]*

Claim 1 specifies a "cavity being closed by a metal cover, which is fastened on a top side of the flange." Ex. 1001, 12:57–58. Patent Owner does not contest that Yoakim meets this limitation of claim 1. Resp. 19–45.

Yoakim's capsule includes "a base element having a cavity that is closed by a 'sealing foil 103 [] sealed onto a peripheral rim 104 of the body.'" Pet. 52 (quoting Ex. 1004 ¶ 129; citing Ex. 1003 ¶¶ 229, 230; Ex. 1004 ¶¶ 128, 414). Yoakim's "cover is fastened to a top side of the flange." *Id*. (citing Ex. 1003 ¶ 225). That "cover is made out of metal comprising aluminum." *Id*. (citing Ex. 1003 ¶¶ 231, 232; Ex. 1004 ¶ 197).

*(8) Element 1[g]*

Claim 1 further requires "the base element" to include "a wall region extending between the flange and a bottom region of the base element." Ex. 1001, 12:58–60. Petitioner relies on Yoakim for this feature. Pet. 52. Patent Owner does not contest that issue. Resp. 19–45.

As illustrated in Yoakim's Figures 6 and 27, reproduced *supra* 26, Yoakim's "capsule 7 comprises a cup-shaped body 70 with upwardly oriented sidewall 76 and a bottom wall 77." Pet. 52 (quoting Ex. 1004 ¶ 197). "The sidewall forms a portion of cone which promotes the collection of the brewed liquid internally." *Id*. "The body terminates by an upper edge 72 raising outwards onto which is sealed a lid 71." *Id*. at 52–53 (citing and reproducing Yoakim's Figures 6 and 27).

*(9) Element 1[h]*

Petitioner relies on Rapparini for disclosure of the claim 1 limitation that requires "the wall region includes radially spaced and vertically oriented grooves that are free from extending entirely to the bottom region" of the base element of the capsule. Ex. 1001, 12:60–62; Pet. 53–54. Patent Owner contests that Rapparini discloses that feature of the invention. Resp. 27–33. We resolve this dispute in our analysis of contested issues.

*(10) Element 1[j]*

Claim 1 specifies a single-serve capsule that "has an identifier, which makes it possible to individualize the respective single-serve capsule," wherein "the identifier is a barcode provided on a bottom side of the flange which is directed away from the metal cover." Ex. 1001, 12:63–67. There is no genuine dispute on this record that Yoakim discloses a barcode that makes it possible to individualize the single-serve capsule, but Yoakim does not indicate that the barcode is located on the bottom side of the flange directed away from a metal cover. Pet. 54–55; Resp. 36–45.

Petitioner argues that Jarisch discloses, in connection with "a near-identical centrifuge-style brewing system," that "the optimal location" for placement of the barcode is "on the bottom of the flange." Pet. 56 (citing Ex. 1005 ¶¶ 14, 15, 22). Petitioner emphasizes that Jarisch supplies a reason why an ordinarily skilled artisan would have chosen that location; namely, because "[t]he bottom of the rim is sufficiently away from the liquid injection and beverage delivery areas so that there is a lower risk for the code to become unreadable." *Id*. (quoting Ex. 1005 ¶ 22).

Patent Owner contests that an ordinarily skilled artisan, equipped with that disclosure in Jarisch, would have been led to place Yoakim's barcode on

the bottom side of the flange, directed away from the metal cover, with a reasonable expectation of success. Resp. 36–45. We resolve that material dispute in our analysis of contested issues.

*b) Claims 2–16*

Petitioner identifies disclosures in the prior art that teach or, at minimum, suggest each element of independent claim 9 and dependent claims 2–6, 8, 10–12, and 14–16. Pet. 43–48, 57–66. Patent Owner does not contest Petitioner's evidence, pertaining to these challenged claims, except to argue that Rapparini does not disclose or suggest grooves that would "generate turbulence of water in the cavity" as required by claims 7 and 13. Resp. 33. We resolve that contested issue below. We find that Petitioner's showing is sufficient with respect to all other issues surrounding the unpatentability of these claims. Pet. 43–48, 57–66.

*c) Resolution of Contested Issues*

Patent Owner does not dispute Petitioner's evidence, except to argue that the prior art does not disclose certain limitations of claims 1, 7, and 13 (Resp. 19–36) and that an ordinarily skilled artisan would not have been led to combine the references in the manner claimed with a reasonable expectation of success (*id*. at 36–45).[18] We focus the remainder of our analysis on those contested issues.

---

[18] We deem as waived Patent Owner's argument, raised during the preliminary phase of the proceeding, that Yoakim fails to disclose a base element in which a "wall region has an electrically conducive section" as specified in claim 5. Ex. 1001, 13:10; *see* Inst. Dec. 24–25 (preliminarily resolving that dispute in Petitioner's favor); Resp. 19–45 (declining to raise that argument during the trial phase); Inst. Dec. 35 ("The Board shall deem waived any issue not raised in a timely response to the Petition . . . even if asserted in the Preliminary Response or discussed in this decision.").

*(1) Claim 1[b]: Cavity Free of a Filter*

Claim 1 requires a capsule having a base element "with a cavity that is free of a filter." Ex. 1001, 12:53. Petitioner contends that Yoakim discloses a capsule "that does not include a filter, and expressly confirms that a filter is optional." Pet. 50 (citing Ex. 1004 ¶¶ 171, 288, 343, 461; Ex. 1003 ¶¶ 213–214). Petitioner further contends that Figures 42 and 54 of Yoakim depict embodiments using capsules that do not have a filter. *Id.* (citing Ex. 1003 ¶ 215–216; Ex. 1004, Figs. 42, 54).

Patent Owner counters that it is evident from the passages and figures cited by Petitioner that Yoakim expressly teaches capsules that contain a filter inside the cavity. Resp. 21–26; *see, e.g.*, Ex. 1004 ¶¶ 271 ("[T]he capsule comprises an ***internal filter portion*** placed at the periphery of the enclosure. The internal filter portion can be an internal perforated lid ***and/or*** a portion of porous material."), 375, 376) (Patent Owner's emphasis).

Upon review of the paragraphs of Yoakim cited by Petitioner and Patent Owner, we find that a filter within the cavity is an optional component in Yoakim. For example, paragraph 271 in Yoakim discloses an embodiment in which an internal perforated lid and/or a portion of porous material are used as a filter. Ex. 1004 ¶ 271. Yoakim clarifies, however, that "[i]n another mode, the filter could be part of the device or be formed by the puncturable membrane and piercing members." *Id.*

We agree with Petitioner that this disclosure indicates that the filter can be part of the brewing device (as opposed to the capsule),[19] or can

[19] During the final hearing, Patent Owner's counsel attempted to blur the distinction between Yoakim's brewing device and capsule. Tr. 34:24–36:21, 37:1–38:5. The intrinsic disclosure of the reference, however, repeatedly

constitute the puncturable membrane that is sealed to the flange. Reply 8–9 & n.2 (Petitioner's arguments on point)[20] (citing Ex. 1004 ¶¶ 255, 271); Ex. 1004 ¶ 20 ("The *device* of the invention conveniently prepares the liquid food from any of the *capsules* disclosed herein that contain one or more extractable or infusible ingredients), ¶¶ 269–271 (emphasis added). Neither of these filter locations is inside of the cavity of the single-serve capsule. Ex. 1067, 50:2–5 (Dr. Howle testifying that something that defines the boundary of the cavity "is neither inside nor outside" the cavity).

Patent Owner contends that "Dr. Howle credibly explains" that "Yoakim repeatedly teaches embodiments where his capsules use filters" and asserts that "Yoakim's passing reference to filtering outside the capsule cavity does not evidence disclosure of a lack of filter within [the] capsule cavity." Sur-reply 18 (citing Ex. 2017 ¶¶ 64–70). We agree that Yoakim teaches embodiments having a filter within the cavity of a single-serve capsule. But Petitioner persuasively demonstrates that Yoakim also contemplates additional embodiments in which the capsules do not include a filter within the cavity, because the filter is placed either in the brewing device or takes the form of the puncturable membrane. Ex. 1004 ¶ 271; Pet. 50; Reply 9; Tr. 13:15–19. That these disclosures are not as numerous,

---

distinguishes the brewing device from the capsule. *See, e.g.*, Ex. 1004, code (57), ¶¶ 20–25, 210, 212, 215–216, 219–224, 229, 237, 250, 255, 271.

[20] These arguments fairly respond to assertions, advanced in the Response, that Yoakim does not suggest a capsule free of a filter. Resp. 20–27. We disagree with Patent Owner that this portion of the Reply contains "new argument" that "should be rejected." Sur-reply 18. Petitioner in the Reply, moreover, fairly addresses other of Yoakim's disclosures to counter arguments raised in the Response. *Compare* Resp. 27*, with* Reply 11.

or are contained in "passing reference[s]" in Yoakim, does not diminish their importance or relevance.

In view of the foregoing, we find that Yoakim discloses a single-serve capsule that "is free of a filter that is located inside of the cavity," as recited in claim 1. Ex. 1001, 13:5–7.

*(2) Claim 1[h]: Grooves*

Petitioner argues that Rapparini's capsule "includes radially spaced and vertically oriented grooves that are free from extending entirely to the bottom region," as specified in claim 1. Ex. 1001, 12:60–62; *see* Pet. 53–54 (for Petitioner's arguments on point). We agree with Petitioner that Rapparini's Figure 6 bis, reproduced below, illustrates grooves that satisfy this limitation of claim 1. Pet. 53–54.

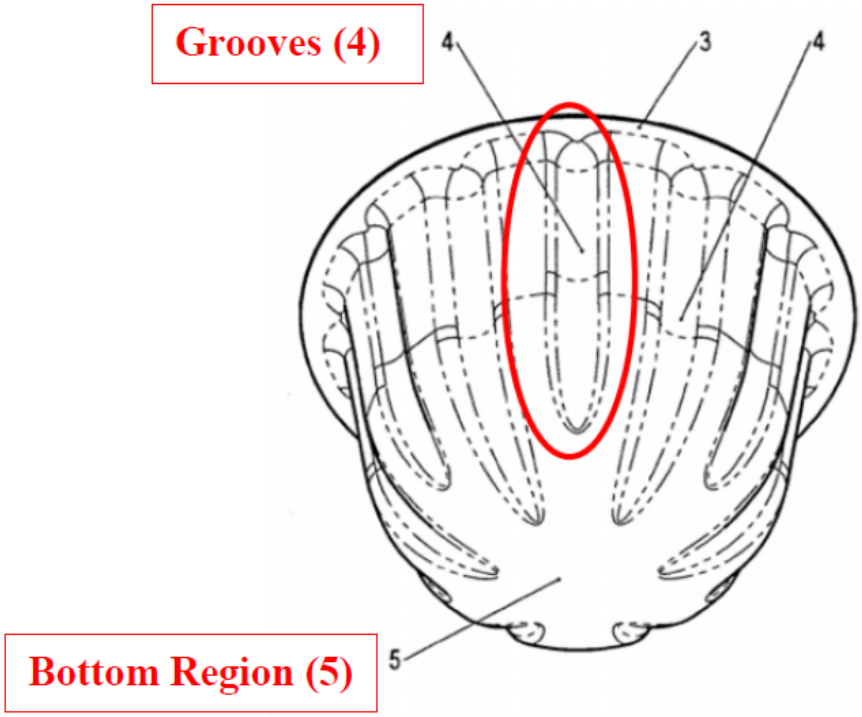


Reply 11–12; *see* Pet. 48, 51, 54. Rapparini's Figure 6 bis illustrates outer regions of Rapparini's container. Ex. 1008 ¶ 32. Figure 6 bis identifies

annular rim 3 and longitudinal stiffening ribs 4 having variable lengths along the surface of the body of the container. *Id*. ¶¶ 10, 11, 53. Petitioner annotates Figure 6 bis by drawing an oval around an individual longitudinal stiffening rib that is of shorter length than two adjacent longitudinal stiffening ribs. Petitioner also labels as "grooves" the element denoted by the numeral 4, which corresponds also to the emphasized longitudinal stiffening rib. In addition, Petitioner adds a label that identifies bottom region 5 of the container that is illustrated in Figure 6 bis.

We agree with Petitioner that an ordinarily skilled artisan, equipped with Rapparini's disclosure, would have understood that "grooves (4), which are located on the outer wall region of [Rapparini's] base element, may have varying lengths, including short ribs 'extending only along the side region of the container.'" Pet. 53 (quoting Ex. 1008 ¶ 11); *see* Ex. 1003 ¶¶ 235–237 (Mr. Jobin's declaration testimony on point); Ex. 1008 ¶ 9 (additional supporting disclosure in Rapparini). Those grooves "are free from extending entirely to the bottom region" as specified in claim 1. Pet. 53 (citing Ex. 1003 ¶ 237). Patent Owner does not dispute those facts about the disclosure of Rapparini's Figure 6 bis or otherwise effectively rebut that the reference renders obvious this limitation of claim 1. Reply 12 (citing Resp. 27–30; Ex. 2017 ¶¶ 77–80 (declining to analyze Figure 6 bis)).

Instead, Patent Owner focuses on Rapparini's Figure 10, which discloses an alternate embodiment of Rapparini's capsule — an embodiment that Petitioner does not rely upon in mapping claim 1 to the reference. Resp. 27–30. We reproduce below Rapparini's Figure 10.

**Rapparini Figure 10**

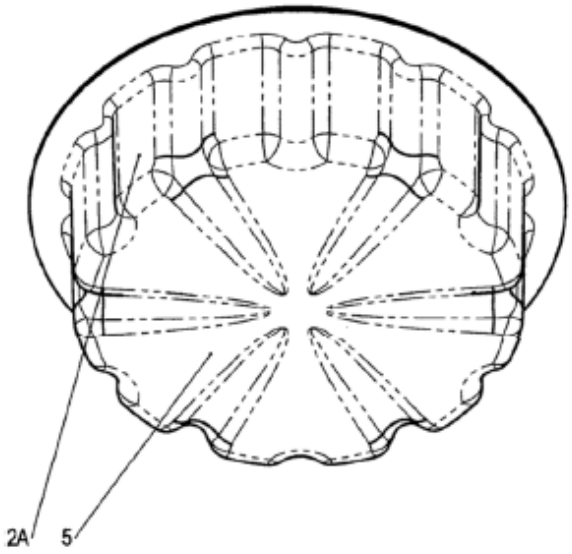


FIG. 10

*Id*. at 29. Figure 10 is a three-dimensional view of the bottom region of an embodiment of Rapparini's capsule. Ex. 1008 ¶ 36. The capsule "has a substantially cylindrical shape with a substantially flat bottom. *Id*. ¶ 61. Short ribs run only along the side wall, whereas long ribs extend beyond the side wall and into the bottom region of the flat-bottomed capsule. *Id*.

Patent Owner argues that Rapparini's Figure 10 "directly contradict[s]" Petitioner's contention that "it would have been obvious to not extend grooves to the bottom" of a flat-bottomed capsule. Resp. 30. But Figure 10 does not erase Rapparini's express teaching that its "invention is directed to configuring 'the length of the ribs [as] variable along the surface of the body' including 'short ribs extending only along the side region of the container' and thus not 'entirely to the bottom region.'" Reply 14 (quoting Ex. 1008 ¶¶ 9–11, 52) (emphasis omitted; alteration in original).

Patent Owner's observation that grooves extending entirely to the bottom region of a capsule were known (as shown in Rapparini's Figure 10)

does not negate that grooves free from so extending also were known (as shown in Rapparini's Figure 6 bis and numerous background references raised by Petitioner) and, importantly, would have been understood to be effective "to improve stability." Reply 15 (citing Resp. 30–32; Ex. 1008 ¶¶ 9–11 (Rapparini's teaching on point); Ex. 1030, 1:14–21, Fig. 1; Ex. 1031, 1:27–37, Fig. 1; Ex. 1032, 5:9–25; Ex. 1035, ¶¶ 27, 37, Fig. 1) (other references with similar teachings). In other words, even if we accept that alternative configurations were known, we agree with Petitioner, on this record, "that it was common practice" at the time of the invention "to utilize grooves on a capsule body wall," where the grooves "***do not*** extend entirely to the bottom region, in order to improve stability." Reply 15 (Petitioner's emphasis); *see* Pet. 6–8; Ex. 1003 ¶¶ 87–95.

Patent Owner similarly argues that Petitioner fails to show that an ordinarily skilled artisan "would pick up Rapparini and select" Figure 6 bis, which illustrates "a capsule that is not frustoconical," as suitable "to modify Yoakim's frustoconical capsules." Sur-reply 19. We agree with Patent Owner that Rapparini describes Figure 10 as depicting a "particularly advantageous" groove configuration for a frustoconical (or flat-bottomed) capsule, in which short grooves "extend to the bottom and long ribs extend into the bottom." Resp. 29. That disclosure, however, falls short of indicating that the groove configuration shown in Figure 6 bis, which includes "grooves that are free from extending entirely to the bottom region" (Ex. 1001, 12:61–62), would not work in a frustoconical capsule such as Yoakim's. *See Intel Corp. v. Qualcomm Inc.*, 21 F.4th 784, 800 (Fed. Cir. 2021) ("Our caselaw is clear. It's not necessary to show that a combination is 'the *best* option, only that it is a *suitable* option.'"). On that point, we read Rapparini as teaching that "grooves of 'variable' length ***including grooves***

***that extend only along the sidewall***" are a suitable option, in general, for improving the structural stability of a capsule. Sur-reply 15 (quoting Ex. 1008 ¶¶ 9–11) (Petitioner's emphasis).

In that regard, Patent Owner, for all practical purposes, raises an ineffective teaching away argument. Resp. 29; Sur-reply 19. For a reference to teach away, it must state more than a general preference for an alternative option. It must "criticize, discredit, or otherwise discourage" investigation into the invention claimed. *In re Fulton*, 391 F.3d 1195, 1201 (Fed. Cir. 2004); *see* Reply 14 (citing the *Intel* and *In re Fulton* decisions of our reviewing court). Rapparini, however, is not shown on this record to "criticize, discredit, or otherwise discourage" the use of Rapparini's Figure 6 bis groove configuration, which would have been understood to improve capsule stability, in Yoakim's frustoconical capsules. Reply 15–16.

We find that an ordinarily skilled artisan would have been aware of the "common practice to utilize grooves on a capsule body" that do not extend entirely to the bottom region. *Id*. at 15. Patent Owner's contrary view rests on Dr. Howle's opinions about the understanding of a person having ordinary skill in the art (Ex. 2017 ¶¶ 77–82), but those opinions are entitled to little or no weight in this proceeding (*see supra* 10–16) and, in any event, fail to account adequately for the skilled artisan's "creativity and common sense." Reply 15–16 (citation omitted).

For the above reasons, we find that it would have been obvious to modify Yoakim's capsule to include grooves of variable length that do not extend entirely to the bottom of the capsule, as taught by Rapparini, in order to achieve the benefits described by Rapparini; namely, to improve "the stability and rigidity of the system." Ex. 1008 ¶ 9.

*(3) Claims 7 and 13: Generating Turbulence of Water in Cavity*

Claims 7 and 13 pertain to the cavity of a single-serve beverage capsule, "wherein the cavity has grooves" that "generate turbulence of water in the cavity." Ex. 1001, 14:18–20. Petitioner argues that, in the modified capsule of Yoakim, the cavity includes the grooves of Rapparini, and the "grooves would induce a turbulent flow of the water through the portion capsule" and that, "while spinning, the fluid [would be] guided and distributed into separate grooves which promotes flow." Pet. 62–63 (citing Ex. 1003 ¶¶ 277–278; Ex. 1004 ¶ 218).

Petitioner directs us to additional evidence that an ordinarily skilled artisan "would understand this to mean" that the grooves in the modified device "would generate turbulence of the water because under pressure and velocity, the grooves or recesses can cause abrupt changes in direction, thus resulting in turbulence and mixing within the capsule." *Id*. at 63 (citing Ex. 1003 ¶ 278). Petitioner cites objective proof that "it was well-known in the art to utilize grooves in the capsule cavity to achieve the predictable result of influencing water flow, such as to further mix beverage contents." *Id*. (citing Ex. 1003 ¶ 279; Ex. 1033, 2:30–35; Ex. 1034 ¶¶ 9, 19, 20).

Patent Owner takes issue with the sufficiency of the opinion testimony provided by Petitioner's witness, Mr. Jobin, on those points. Resp. 33–35. In particular, Patent Owner objects to Mr. Jobin's reliance on background references as support for his opinions. *See id*. (Mr. Jobin's reliance, in paragraph 279 of his declaration, on Exhibit 1033 and Exhibit 1034). In Patent Owner's view, Mr. Jobin improperly refers to references that are "not part of the combination" applied in the ground. *Id*. at 34. But there is nothing improper about Mr. Jobin supporting his opinions with objective evidence, including background references, especially where those references were

made of record contemporaneously with the Petition and Patent Owner had every opportunity to test Mr. Jobin's opinions through cross-examination.

In Patent Owner's further view, Mr. Jobin's opinion that grooves "would cause the fluid to move in various directions, resulting in turbulence and mixing in the capsule" is conclusory because it is "made without reference to the underlying structure, direction, speed, pressure, volume flow, or any of the other parameters which determine whether a flow is laminar or turbulent." *Id*. (quoting Ex. 1003 ¶ 278). Patent Owner observes that Mr. Jobin does not "cite to any experimentation or modeling he conducted or papers which show, under identical conditions to those disclosed by Yoakim and Rapparini, that turbulent flow necessarily would result" when fluid in the spinning capsule encounters grooves. *Id*. at 34–35.

Patent Owner's arguments do not undercut the sufficiency of Mr. Jobin's testimony. Patent Owner's arguments are unavailing because they are predicated on a disclosure in Yoakim that the water flow is "laminar" in the unmodified capsule, which lacks grooves. *Id*. at 33–34. It is unsurprising, therefore, that Yoakim discusses laminar as opposed to turbulent flow in its capsule cavity. *Id*. Where Yoakim's ***unmodified*** capsule lacks the grooves of Rapparini, Patent Owner's reliance on Yoakim's discussion of laminar fluid flow is misplaced. *See id*. (relying on Yoakim's discussion of laminar fluid flow in a smooth-walled capsule).

Patent Owner further observes that "Rapparini makes no reference whatsoever to either turbulent or laminar flow." *Id*. at 33. That observation does not undercut Petitioner's evidence that "spinning" fluid in the cavity of the ***modified*** capsule of Yoakim would be "guided and distributed into separate grooves which promotes flow" and "would generate turbulence." Pet. 62–63 (citing Ex. 1003 ¶¶ 277–278; Ex. 1004 ¶ 218). We credit

Mr. Jobin's opinion, in that regard, which is supported by background references, and which indicates that "grooves in the capsule cavity" will "achieve the predictable result of influencing water flow." *Id*. at 63 (citing Ex. 1003 ¶ 279; Ex. 1033, 2:30–35; Ex. 1034 ¶¶ 9, 19, 20). We assign little or no weight Dr. Howle's conflicting opinions, which go to the core of mechanical beverage design, about which Dr. Howle possesses little or no practical experience. Resp. at 35–36 (relying on Ex. 2017 ¶¶ 85–86); *see supra* 10–16 (weight accorded to conflicting opinion testimony).

Mr. Jobin's failure to include an assessment of the "direction, speed, pressure, volume flow, or any of the other parameters which determine whether a flow is laminar or turbulent" does not, on this record, render his opinion "conclusory." *Id*. at 34. The technical proposition at hand is relatively simple and straightforward, and we find sufficient Mr. Jobin's reliance on objective proof that an ordinarily skilled artisan would have understood the mere presence of "circumferentially spaced" grooves and ribs in a beverage capsule to produce a "beneficial increase in turbulence" of water in the cavity. Ex. 1033, 2:30–35 (*cited in* Ex. 1003 ¶ 279).

For the same reasons, we determine that Mr. Jobin's opinion that grooves would generate fluid turbulence does not require the additional support of "experimentation or modeling." Resp. 34. Nor does Mr. Jobin's opinion require "reference to the underlying structure" of the capsule, above or beyond the circumstance that Yoakim's smooth sidewalls are modified to include Rapparini's grooves and ribs. *Id*.

As Petitioner aptly points out, the '923 patent discusses none of these parameters, yet there is no dispute, on this record, that the '923 patent's disclosure of grooves is sufficient to disclose also turbulent water flow in the spinning capsule. Reply 17–18. Rapparini's disclosure of grooves likewise is

sufficient to suggest turbulent water flow in a spinning capsule. We decline to require in the disclosure of the applied prior art a higher degree of detail than is provided in the disclosure of the ’923 patent. *See* Ex. 1001, 4:47–5:9, 5:66–6:4, 6:60–62 (indicating that grooves generate turbulent flow, without reporting any “experimentation or modeling,” and without disclosing the “direction, speed, pressure, volume flow, or any of the other parameters which,” according to Patent Owner, “determine whether a flow is laminar or turbulent” (Resp. 34)); *see also In re Epstein*, 32 F.3d 1559, 1568 (Fed. Cir. 1994) (“[T]he Board’s observation that appellant did not provide the type of detail in his specification that he now argues is necessary in prior art references supports the Board’s finding that one skilled in the art would have known how to implement the features of the references.”).

*(4) Motivation to Combine and Expectation of Success*

The parties dispute whether Petitioner demonstrates adequately that an ordinarily skilled artisan would have been led to combine the references in the manner claimed with a reasonable expectation of success. *Compare* Pet. 27–30 *and* Reply 19–26, *with* Resp. 36–45 *and* Sur-reply 5–12. Patent Owner’s arguments, in that regard, pertain exclusively to whether a person of ordinary skill in the art would have been led to modify Yoakim’s capsule in view of Jarisch to place the identifier on the bottom side of the flange, directed away from the metal cover, as required by claim 1. Resp. 36–45.

Patent Owner contends, on that point, that Petitioner is the owner of Jarisch, and Yoakim and Jarisch both have a common owner and a common inventor, yet despite the fact that Jarisch’s priority document was filed “days after Yoakim,” Jarisch makes no mention of Yoakim in the background or otherwise. Resp. 38. According to Patent Owner, “[t]his suggests the

inventors of those references did not themselves see any clear relation between the two references." *Id*.

That argument is not persuasive. A reference need not identify or discuss another prior art patent or application in order for that reference to be deemed relevant or analogous art. Nor do we endeavor to determine why, or why not, a particular reference is discussed in a prior art reference. The analogous art inquiry focuses on reasonable pertinence and involves assessing the similarities between the claimed invention and the prior art, including the problems addressed and the closeness of the subject matter, as viewed by an ordinarily skilled artisan. *Donner Tech., LLC v. Pro Stage Gear, LLC*, 979 F.3d 1353, 1360 (Fed. Cir. 2020); *see Airbus S.A.S. v. Firepass Corp.*, 941 F.3d 1374, 1380-81 (Fed. Cir. 2019) (relevant analysis focuses on comparing the disclosed embodiments, function, and structure of the claimed invention to the disclosures of the prior art). Against that backdrop, we reject Patent Owner's suggestion that the inquiry involves whether the inventors of Jarisch saw a need to discuss Yoakim's disclosure in Jarisch's priority document.

Patent Owner also argues that a parent application to Yoakim (WO2008/148601, "Yoakim '601) was cited against Jarisch during patent prosecution. *Id*. According to Patent Owner, "Petitioner disparaged the ability of Yoakim '601 to be combined with other references describing single-serve coffee capsules, stating that 'the skilled artisan would not have combined these cited references [including Yoakim '601] to arrive at a capsule comprising a code arranged on a bottom of a flange-like rim.'" *Id*. (quoting Ex. 2009, 393).

That argument is not persuasive. As an initial matter, we observe that the quoted material does not appear on page 393 of Exhibit 2009 (*see id*.), or

any immediately surrounding pages, and we decline to "play archeologist with the record" by undertaking an independent review of this extraordinarily lengthy exhibit in an effort to discover support for Patent Owner's argument.[21] *DeSilva v. DiLeonardi*, 181 F.3d 865, 866–67 (Fed. Cir. 1999).

In any event, responding to Patent Owner's argument, Petitioner represents that it "never disparaged combining Yoakim with Jarisch, or any other references" during prosecution of Jarisch, but instead asserted that all of the prior art applied by the Examiner, including Yoakim '601, "lacked Jarisch's disclosure of a code under the flange." Reply 25–26. Importantly, Patent Owner does not contest that representation. Sur-reply 5–12. Any assertion during prosecution that the applied prior art "lacked Jarisch's teachings" about the identifier location is not shown, on this record, to preclude Petitioner from arguing in this proceeding that those teachings in Jarisch are combinable with Yoakim. Reply 26.

In response to Petitioner's argument that it was well known to locate an identifier on the underside of the rim of a capsule for the purpose of increasing readability (Pet. 13, 56), Patent Owner counters that there is no reason to believe that Yoakim's placement of a barcode on the top of the membrane would suffer from readability issues, given that the barcode is read before brewing "when a capsule would not be soiled by beverage residues." Resp. 36 (citing Ex. 1004 ¶¶ 525–526). Patent Owner also contends that there is no evidence that Yoakim suffers from the same

[21] Exhibit 2009 is about six thousand pages long and was filed by Patent Owner in a format that is not text-searchable. *See* Ex. 2009, 6004.

problems as Jarisch, especially because sensor 231 is located inboard of the liquid flow path in Figure 61. Sur-reply 7–8.

Those arguments are not persuasive. We credit Mr. Jobin's testimony that placing a barcode under the flange would lower the risk of the code becoming unreadable due to beverage residues. Ex. 1003 ¶ 182. We also agree with Petitioner that Yoakim addresses beverage residues that are left over in the chamber from prior brewings, not residues caused by the currently-inserted single-serve capsule. Reply 20 (citing Ex. 1005 ¶ 22; Ex. 1067, 81:3–13 (Dr. Howle testifying, in a manner consistent with Mr. Jobin's testimony,[22] that "in a very broad sense, residue can be a solid left over after the brewing process"); Ex. 1004, Fig. 63.[23]

We also credit Mr. Jobin's testimony that moving the code to the bottom of the flange would advantageously avoid placing the code near the piercing element, and avoid the problem of piercing the membrane in the same general location that is meant to be read *after* closing the device. Reply 21; Ex. 1003 ¶ 192; *see* Pet. 13. Dr. Howle agrees that Yoakim's piercing element is located in the same area as the barcode and "would pierce the

---

[22] Because he lacks the minimum qualifications of an ordinarily skilled artisan, we assign no weight to Dr. Howle's further opinion that an ordinarily skilled artisan "would not have had a reasonable expectation of success in moving the sensor to the bottom of Yoakim's brewing device." Resp. 42 (citing Ex. 2017 ¶¶ 90–91); *see supra* 10–16. Alternatively, we assign his testimony less weight than Mr. Jobin's. *See supra* 10–16.

[23] Jarisch explains that the bottom rim is an advantageous location for the barcode because it is sufficiently away from *both* the liquid injection and beverage delivery areas. Ex. 1005 ¶ 22. Patent Owner's arguments focus on the beverage delivery areas, without addressing the fact that the liquid injection area of Yoakim is inboard of sensor 231 and the barcode. Resp. 37, 41–43; Sur-reply 7–8; Ex. 1004, Fig. 61.

membrane in the same location that is meant to be read *after* closing." Reply 21 (citing Ex. 1067, 94:6–95:9, 96:1–21); Ex. 1008, Fig. 61.

Patent Owner contends that Petitioner fails to address other important differences between Yoakim and Jarisch that undermine the combination. Resp. 41–42. Those arguments rest on Dr. Howle's opinions about the level of ordinary skill in the art, which conflict with opinions provided by Mr. Jobin. *See supra* 10–16 (explaining why we do not credit Dr. Howle's opinions); Resp. 42–45 (citing Ex. 2017 ¶¶ 90–99). We credit Mr. Jobin's testimony that it would have required no more than an exercise of ordinary skill in the art to modify Yoakim's capsule to include the barcode location taught by Jarisch. Reply 19–25 (citing Ex. 1003 ¶¶ 113–114, 179, 190–195).

In support of its arguments, Petitioner also relies on the following annotated figures from Jarisch and Yoakim.

| Jarisch | Yoakim |
|---|---|
| 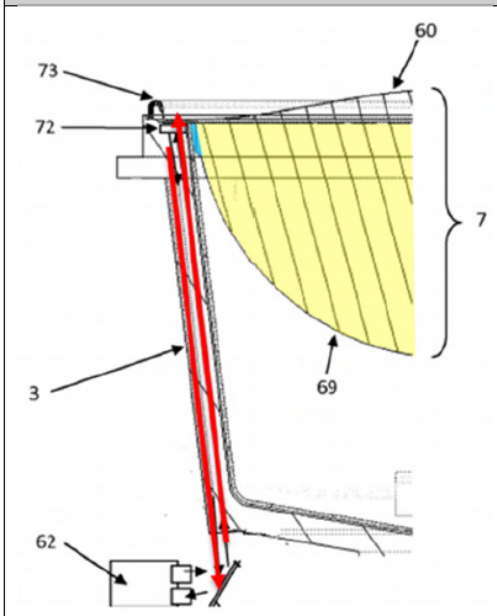 <br>Pet. at 49 (citing Ex. 1005, Fig. 4). | 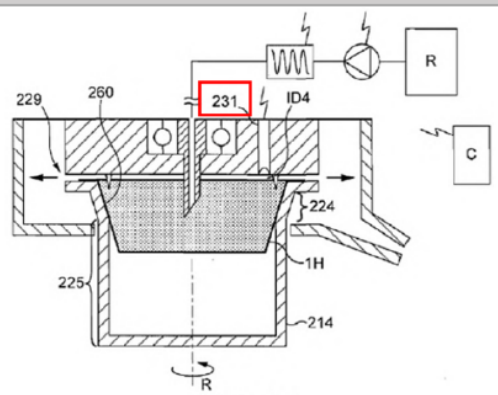 <br>FIG. 61<br>Ex. 1004 at Fig. 61. |

Resp. 41. As shown above, Petitioner provides annotated versions of Figure 4 of Jarisch and Figure 61 of Yoakim. As annotated by Patent Owner,

Jarisch is designed with a straight chamber of transparent material that lies between the code and the sensor. In Figure 61 of Yoakim, by contrast, there is a bend, or flare, in capsule holder 214 (portion 224).

In Patent Owner's view, for the sensor/detector to pass light through flare portion 224, Yoakim would require extensive modifications, including mirroring or index-of-refraction matching within the flared structure, as well as consideration of "anisotropy in the material, Fresnel effects, internal reflection, transmission loss along the wall of the holder, and other impairment to the light available for detection." *Id.* at 42 (citing Ex. 2017 ¶¶ 91–91). In view of these allegedly necessary modifications, Patent Owner contends that an ordinarily skilled artisan "would not have been motivated to combine the teachings of the two references" and, further, would not have had a reasonable expectation of success in so doing. *Id.* at 42–43.

In Petitioner's contrary view, Jarisch teaches how to move a code in a centrifugal brewing system to the bottom of the flange and how to configure a light-conductive material so that the detector's light source will reach the bottom of the flange. Pet. 45–46; Reply 21–22 (Ex. 1003 ¶¶ 194–195; Ex. 1005 ¶¶ 82–84, Fig. 5). Although Figure 61 of Yoakim discloses a flare in its brewing chamber, bodily incorporation is not required, and we are directed to no persuasive argument or evidence that Yoakim could not be configured with a straight chamber, as depicted in Figure 5 of Jarisch.

We credit the testimony of Mr. Jobin that a person of ordinary skill in the art would have sought to place the code at the bottom of the flange and would have had a reasonable expectation of success in so doing. Ex. 1003 ¶ 184. For reasons explained above, we assign little or no weight to Dr. Howle's conflicting testimony because he has little or no experience designing a mechanical beverage system or similar product. *See supra* 10–

16. Petitioner lays out persuasive reasons why Dr. Howle's testimony, on this particular point, is "conclusory" and rests on "bodily incorporation" of the references. Reply 24; *see id*. at 22–24 (pointing out with particularity fundamental flaws in Dr. Howle's opinions); *In re Mouttet*, 686 F.3d 1322, 1332 (Fed. Cir. 2012) ("It is well-established that a determination of obviousness based on teachings from multiple references does not require an actual, physical substitution of elements."); *In re Nievelt*, 482 F.2d 965, 968 (CCPA 1973) ("Combining the teachings of references does not involve an ability to combine their specific structures.").

In addition, Patent Owner contends that Yoakim requires that the capsule holder be capable of receiving a set of multiple volume capsules and that there is a "snug fit" to avoid "unbalances." Sur-reply 8 (citing Ex. 1004 ¶¶ 205, 479, 484, 507, 512). According to Patent Owner, Petitioner does not explain adequately how the use of Jarisch's "straight chamber" with a capsule holder that does not engage with the side wall of the capsule would allow insertion of multiple volume capsules or permit a "snug fit" in the modified device of Yoakim. *Id*. at 8–9.

Patent Owner's view that Yoakim discloses the use of certain capsules which might not fit into a device with Jarisch's non-flared structure is ineffective to undercut the sufficiency of Petitioner's showing on this point. Petitioner is not seeking a bodily incorporation of Yoakim and Jarisch and, in any event, other embodiments of Yoakim do not require the type of flared capsule identified by Patent Owner. Ex. 1004, Fig. 63. Furthermore, we credit the testimony of Mr. Jobin that one of ordinary skill in the art would have understood how to design the chamber of Yoakim to allow reading of a barcode on the underside of the flange. Ex. 1003 ¶¶ 187–195.

With respect to the argument that the use of Jarisch's design would not allow a snug fit, we are directed to no persuasive evidence that Jarisch's lack of contact between the capsule side wall and the holder would render the device inoperable or less effective. Resp. 39–40; *see* Reply 22 (citing Ex. 2019, 36:18–37:6). Indeed, as Petitioner points out, Jarisch indicates that its device, including its capsule holding means, allows the capsule to be successfully driven in rotation. Reply 22 (citing Ex. 1005 ¶ 23).

Patent Owner also contends that Jarisch's use of a "bit code" would teach away from using a barcode in the combined device. Resp. 44–45. Patent Owner reasons that Yoakim uses the bare term "barcode," without providing any information as to what the code would actually be, whereas Jarisch teaches that reading information from a capsule, including from a barcode, is not always reliable or convenient. *Id.* at 44–45 (citing Ex. 1005 ¶¶ 8, 9, 11, 13). Jarisch's solution, according to Patent Owner, is to use a "bit code," which would have motivated one of ordinary skill in the to use a "bit code" over the "barcode" of Yoakim. *Id.*

We do not find Patent Owner's arguments persuasive to undercut Petitioner's evidence on point. Yoakim expressly discloses using a barcode as an identifier (Ex. 1004 ¶¶ 496, 525), and Jarisch does not criticize or otherwise teach away from the use of a barcode. For example, although Jarisch notes that barcodes had been used in the art previously (Ex. 1005 ¶¶ 8, 9, 11), the reference does not disparage the use of barcodes or suggest that their use would not be successful. Jarisch merely indicates a preference for a "bit code." Ex. 1005 ¶ 17 ("Preferably, the code is an optical code. The code may be a bit code formed by a series of discrete polygonal . . . or dot surfaces printed on the container and/or embossed in the container.").

For the above reasons, we determine that Petitioner persuasively explains why one of ordinary skill in the art would have combined the disclosures of the prior art in the manner claimed.

*(5) Conclusion on Petitioner's Patentability Challenge*

For the above reasons, we determine that Petitioner shows by a preponderance of evidence that the subject matter of claims 1–16 would have been obvious at the time of the invention over the combined disclosures of Yoakim, Jarisch, and Rapparini.

## III. CONCLUSION[24]

In summary:

| Claims | 35 U.S.C. § | References | Claims Shown Unpatentable | Claims Not Shown Unpatentable |
|---|---|---|---|---|
| 1–16 | 103 | Yoakim, Jarisch, Rapparini | 1–16 | |
| **Overall Outcome** | | | 1–16 | |

[24] Should Patent Owner wish to pursue amendment of the challenged claims in a reissue or reexamination proceeding subsequent to the issuance of this decision, we draw Patent Owner's attention to the April 2019 *Notice Regarding Options for Amendments by Patent Owner Through Reissue or Reexamination During a Pending AIA Trial Proceeding*. *See* 84 Fed. Reg. 16,654 (Apr. 22, 2019). If Patent Owner chooses to file a reissue application or a request for reexamination of the challenged patent, we remind Patent Owner of its continuing obligation to notify the Board of any such related matters in updated mandatory notices. *See* 37 C.F.R. § 42.8(a)(3), (b)(2).

## IV. ORDER

It is

ORDERED that Petitioner has shown that claims 1–16 of the ’923 patent are unpatentable; and

FURTHER ORDERED that because this decision is final, a party to the proceeding seeking judicial review of the decision must comply with the notice and service requirements of 37 C.F.R. § 90.2.

For PETITIONER:

Barry McCraw
Amanda Bonner
MAYER BROWN LLP
cmccraw@mayerbrown.com
astreff@mayerbrown.com

For PATENT OWNER:

Michael Chu
Douglas Carsten
Ian Brooks
McDERMOTT WILL & EMERY LLP
mchu@mwe.com
dcarsten@mwe.com
ibrooks@mwe.com

Scott Pleune
ALSTON & BIRD LLP
ben.pleune@alston.com

Eric Dobrusin
Paul Palinski
THE DOBRUSIN LAW FIRM P.C.
edobrusin@patentco.com
ppalinski@patentco.com