Downloaded from SAE International by Tara Casaletto, Monday, January 09, 2023

SAE International™

SURFACE VEHICLE STANDARD

SAE J1979

REV. APR2002

Issued 1991-12
Revised 2002-04

Superseding J1979 SEP1997

(R) E/E Diagnostic Test Modes — Equivalent to ISO/DIS 15031-5:April 30, 2002

This document supersedes SAE J1979 SEP1997, and is technically equivalent to ISO/DIS 15031-5:April 30, 2002, except for minor reorganisation of Paragraphs 1 and 2.

***Foreword*—**On-Board Diagnostic (OBD) regulations require passenger cars, and light and medium duty trucks, to support communication of a minimum set of diagnostic information to off-board "generic" test equipment. This document specifies diagnostic services and functionally addressed request / response messages required to be supported by motor vehicles and external test equipment for diagnostic purposes which pertain to motor vehicle emission-related data. These messages are intended to be used by any external test equipment meeting the requirements of SAE J1978 for retrieval of OBD information from a vehicle.

SAE J1979 was originally developed to meet U.S. OBD requirements for 1996 and later model year vehicles. ISO 15031-5 was based on SAE J1979 and was intended to combine the U.S. requirements with European OBD requirements for 2000 and later model year vehicles. In addition, this document and later versions of the ISO/DIS document include new data reporting requirements included in proposed U.S. regulations, and also include specific requirements for retrieval of the same diagnostic information from vehicles equipped with ISO 15765-4 as a diagnostic data link.

SAE Technical Standards Board Rules provide that: "This report is published by SAE to advance the state of technical and engineering sciences. The use of this report is entirely voluntary, and its applicability and suitability for any particular use, including any patent infringement arising therefrom, is the sole responsibility of the user."

SAE reviews each technical report at least every five years at which time it may be reaffirmed, revised, or cancelled. SAE invites your written comments and suggestions.

Copyright ©2002 Society of Automotive Engineers, Inc.
All rights reserved. No part of this publication may be reproduced, stored in a retrieval system or transmitted, in any form or by any means, electronic, mechanical, photocopying, recording, or otherwise, without the prior written permission of SAE.

TO PLACE A DOCUMENT ORDER: Tel: 877-606-7323 (inside USA and Canada)
Tel: 724-776-4970 (outside USA)
Fax: 724-776-0790
Email: custsvc@sae.org

SAE WEB ADDRESS: http://www.sae.org

Geotab Exhibit 1075
Geotab v. Omega

Downloaded from SAE International by Tara Casaletto, Monday, January 09, 2023

TABLE OF CONTENTS

1 Scope 4
1.1 Purpose 4
1.2 Differences from ISO Document 5

2 Reference(s) 6
2.1 Applicable Publications 6
2.1.1 SAE Publications 6
2.1.2 ISO Publications 6
2.2 Related Publications 6
2.2.1 SAE Publications 6
2.2.2 ISO Documents 6

3 Term(s) and Definition(s) 6

4 Technical Requirements 8
4.1 Diagnostic Service, General Requirements 8
4.1.1 Multiple Responses to a Single Data Request 8
4.1.2 Application Timing Parameter Definition 8
4.1.3 Minimum Time between Requests from External Test Equipment 10
4.1.4 Data Not Available 15
4.1.5 Maximum Value 19
4.2 Diagnostic Message Format 19
4.2.1 Addressing Method 19
4.2.2 Maximum Message Length 19
4.2.3 Request/Response Message Format 20
4.2.4 Response Code Parameter Definition 21
4.2.5 Header Byte Definition of ISO 9141-2, ISO 14230-4, and SAE J1850 22
4.2.6 Header Byte Definition of ISO 15765-4 22
4.2.7 Data Bytes Definition of ISO 9141-2, ISO 14230-4, SAE J1850, and ISO 15765-4 23
4.2.8 Non-Data Bytes included in Diagnostic Messages with SAE J1850 23
4.2.9 Non-Data Bytes included in Diagnostic Messages with ISO 9141-2 and ISO 14230-4 23
4.2.10 Bit Position Convention 23
4.3 Allowance for Expansion and Enhanced Diagnostic Services 23
4.4 Definition of PIDs for Service $01 and $02 23
4.5 Format of Data to be Displayed 23

5 Diagnostic Service Definition for ISO 9141-2, ISO 14230-4, and SAE J1850 24
5.1 Service $01 - Request Current Powertrain Diagnostic Data 24
5.1.1 Functional Description 24
5.1.2 Message Data Bytes 25
5.1.3 Parameter Definition 26
5.1.4 Message Example 26
5.2 Service $02 - Request Powertrain Freeze Frame Data 29
5.2.1 Functional description 29
5.2.2 Message Data Bytes 30
5.2.3 Parameter Definition 31
5.2.4 Message Example 31
5.3 Service $03 - Request Emission-Related Diagnostic Trouble Codes 32
5.3.1 Functional Description 32
5.3.2 Message Data Bytes 33
5.3.3 Parameter Definition 34
5.3.4 Message Example 34

Downloaded from SAE International by Tara Casaletto, Monday, January 09, 2023

5.4 Service $04 - Clear/Reset Emission-Related Diagnostic Information 37
5.4.1 Functional Description 37
5.4.2 Message Data Bytes 37
5.4.3 Parameter Definition 37
5.4.4 Message Example 37
5.5 Service $05 - Request Oxygen Sensor Monitoring Test Results 39
5.5.1 Functional Description 39
5.5.2 Message Data Bytes 39
5.5.3 Parameter Definition 40
5.5.4 Message Example 41
5.6 Service $06 - Request On-Board Monitoring Test Results for Specific Monitored Systems 43
5.6.1 Functional Description 43
5.6.2 Message Data Bytes 43
5.6.3 Parameter Definition 44
5.6.4 Message Example 45
5.7 Service $07 - Request Emission-Related Diagnostic Trouble Codes Detected During Current or Last Completed Driving Cycle 47
5.7.1 Functional Description 47
5.7.2 Message Data Bytes 47
5.7.3 Parameter Definition 48
5.7.4 Message Example 48
5.8 Service $08 - Request Control of On-Board System, Test or Component 48
5.8.1 Functional Description 48
5.8.2 Message Data Bytes 48
5.8.3 Parameter Definition 50
5.8.4 Message Example 50
5.9 Service $09 - Request Vehicle Information 51
5.9.1 Functional Description 51
5.9.2 Message Data Bytes 51
5.9.3 Parameter Definition 52
5.9.4 Message Example 53

6. Diagnostic Service Definition for ISO 15765-4 63
6.1 Service $01 - Request Current Powertrain Diagnostic Data 63
6.1.1 Functional Description 63
6.1.2 Message Data Bytes 63
6.1.3 Parameter Definition 65
6.1.4 Message Example 65
6.2 Service $02 - Request Powertrain Freeze Frame Data 69
6.2.1 Functional Description 69
6.2.2 Message Data Bytes 69
6.2.3 Parameter Definition 71
6.2.4 Message Example 71
6.3 Service $03 - Request Emission-Related Diagnostic Trouble Codes 74
6.3.1 Functional Description 74
6.3.2 Message Data Bytes 74
6.3.3 Parameter Definition 75
6.3.4 Message Example 75
6.4 Service $04 - Clear/Reset Emission-Related Diagnostic Information 76
6.4.1 Functional Description 76
6.4.2 Message Data Bytes 76
6.4.3 Parameter Definition 77
6.4.4 Message Example 77
6.5 Service $05 - Request Oxygen Sensor Monitoring Test Results 78

Downloaded from SAE International by Tara Casaletto, Monday, January 09, 2023

6.6 Service $06 - Request On-Board Monitoring Test Results for Specific Monitored Systems 78
6.6.1 Functional Description 78
6.6.2 Message Data Bytes 78
6.6.3 Parameter Definition 80
6.6.4 Message Example 83
6.7 Service $07 - Request Emission-Related Diagnostic Trouble Codes Detected During Current or Last Completed Driving Cycle 85
6.7.1 Functional Description 85
6.7.2 Message Data Bytes 86
6.7.3 Parameter Definition 86
6.7.4 Message Example 86
6.8 Service $08 - Request Control of On-Board System, Test or Component 86
6.8.1 Functional Description 86
6.8.2 Message Data Bytes 87
6.8.3 Parameter Definition 88
6.8.4 Message Example 88
6.9 Service $09 - Request Vehicle Information 90
6.9.1 Functional Description 90
6.9.2 Message Data Bytes 90
6.9.3 Parameter Definition 92
6.9.4 Message Example 92

7. Notes 98
7.1 Marginal Indicia 98

Appendix A (normative) PID (Parameter ID)/OBDMID (On-Board Monitor ID) / TID (Test ID)/INFOTYPE supported definition 99
Appendix B (normative) PIDs (Parameter ID) for Service $01 and $02 Scaling and Definition 100
Appendix C (normative) TIDs (Test ID) for Service $05 Scaling and Definition 122
Appendix D (normative) OBDMIDs (On-Board Diagnostic Monitor ID) Definition for Service $06 123
Appendix E (normative) Unit and Scaling ID definition for service $06 127
E.1 Unsigned Unit and Scaling Identifiers Definition 127
E.2 Signed Unit and Scaling Identifiers Definition 144
Appendix F (normative) TIDs (Test ID) for Service $08 Scaling and Definition 152
Appendix G (normative) INFOTYPEs for Service $09 Scaling and Definition 153

1. Scope

1.1 Purpose—This document supersedes SAE J1979 SEP1997, and is technically equivalent to ISO/DIS 15031-5:April 30, 2002.

This SAE Recommended Practice is intended to satisfy the data reporting requirements of On-Board Diagnostic (OBD) regulations in the United States and Europe, and any other region that may adopt similar requirements in the future. This document specifies:

a. Message formats for request and response messages,
b. Timing requirements between request messages from external test equipment and response messages from vehicles, and between those messages and subsequent request messages,
c. Behavior of both the vehicle and external test equipment if data is not available,
d. A set of diagnostic services, with corresponding content of request and response messages, to satisfy OBD regulations,

Downloaded from SAE International by Tara Casaletto, Monday, January 09, 2023

This document includes capabilities required to satisfy OBD requirements for multiple regions, model years, engine types, and vehicle types. Those regulations are not yet final for some regions, and are expected to change in the future. This document makes no attempt to interpret the regulations and does not include applicability of the included diagnostic services and data parameters for various vehicle applications. The user of this document is responsible to verify the applicability of each section of this document for a specific vehicle, engine, model year and region.

This document is based on the Open Systems Interconnection (OSI) Basic Reference Model in accordance with ISO/IEC 7498 and ISO/IEC 10731 which structures communication systems into seven layers as shown in the table below.

TABLE 1—APPLICABILITY AND RELATIONSHIP BETWEEN DOCUMENTS

Applicability	OSI 7 layer	Emissions-related diagnostics	Applicability	OSI 7 layer	Emissions-related diagnostics
Seven layer according to ISO/IEC 7498 and ISO/IEC 10731	Physical (layer 1)	ISO 9141-2	ISO 14230-1	SAE J1850	ISO 11898, ISO 15765-4
	Data link (layer 2)	ISO 9141-2	ISO 14230-2	SAE J1850	ISO 11898, ISO 15765-4
	Network (layer 3)	---	---	---	ISO 15765-2, ISO 15765-4
	Transport (layer 4)	---	---	---	---
	Session (layer 5)	---	---	---	ISO 15765-4
	Presentation (layer 6)	---	---	---	---
	Application (layer 7)	SAE J1979 / ISO 15031-5	SAE J1979 / ISO 15031-5	SAE J1979 / ISO 15031-5	SAE J1979 / ISO 15031-5

1.2 Differences from ISO Document—There are no technical differences between this document and ISO/DIS 15031-5:April 30, 2002.

NOTE— Both this document and the ISO 15031-5 document are intended to satisfy the requirements of OBD requirements in the United States and Europe, and any other region that may adopt similar requirements in the future. Those regulations change with time, and often when a requirement is introduced in one region, it will later also become a requirement in another region. The ISO task force responsible for ISO 15031-5 and the SAE task force work closely together to maintain consistency in diagnostic reporting requirements in these two documents, and to ensure usability of these documents for all regions. The goal is to maintain identical technical content in the two documents, but this document may need to change if additional capabilities are required for the U.S. before the ISO document can be modified to include those changes.

Downloaded from SAE International by Tara Casaletto, Monday, January 09, 2023

2. *References*

2.1 Applicable Publications—The following publications form a part of this specification to the extent specified herein. Unless otherwise indicated, the latest version of SAE publications shall apply.

2.1.1 SAE PUBLICATIONS—Available from SAE, 400 Commonwealth Drive, Warrendale, PA 15096-0001.

SAE J1850: MAY2001—Class B Data Communications Network Interface.
SAE J1930—Electrical/Electronic Systems Diagnostic Terms, Definitions, Abbreviations, and Acronyms - Equivalent to ISO/TR 15031-2: April 30, 2002
SAE J1978—OBD II Scan Tool - Equivalent to ISO/DIS 15031-4:December 14, 2001
SAE J2012—Diagnostic Trouble Code Definitions - Equivalent to ISO/DIS 15031-6:April 30, 2002

2.1.2 ISO DOCUMENTS—Available from ANSI, 25 West 43rd Street, New York, NY 10036-8002.

ISO 9141-2: 1994—Road vehicles - Diagnostic systems - Part 2: CARB requirements for interchange of digital information
ISO 9141-2: 1994/ Amd.1:1996—Road vehicles - Diagnostic systems - Part 2: CARB requirements for interchange of digital information Amendment 1
ISO 14230-4:2000—Road vehicles - Keyword protocol 2000 for diagnostic systems - Part 4: Requirements for emissions-related systems
ISO/DIS 15031-5: April 30, 2002—Road vehicles - Communication between vehicle and external test equipment for emissions-related diagnostics - Part 5: Emissions related diagnostic services
ISO 15765-2—Road vehicles – Diagnostics on Controller Area Network (CAN) – Part 2: Network layer services
ISO 15765-4—Road vehicles – Diagnostics on Controller Area Network (CAN) – Part 4: Requirements for emissions-related systems

2.2 Related Publications—The following publications are provided for information purposes only and are not a required part of this specification.

2.2.1 SAE PUBLICATION—Available from SAE, 400 Commonwealth Drive, Warrendale, PA 15096-0001.

SAE J1962—Diagnostic Connector - Equivalent to ISO/DIS 15031-3:December 14, 2001

2.2.2 ISO DOCUMENT—Available from ANSI, 25 West 43rd Street, New York, NY 10036-8002.

ISO 15031-1:2001—Road vehicles - Communication between vehicle and external test equipment for emissions-related diagnostics - Part 1: General information

3. *Term(s) and Definition(s)*

3.1 Absolute Throttle Position Sensor—This value is intended to represent the throttle opening.

NOTE— For systems where the output is proportional to the input voltage, this value is the percent of maximum input signal. For systems where the output is inversely proportional to the input voltage, this value is 100% minus the percent of maximum input signal. Throttle position at idle will usually indicate greater than 0%, and throttle position at wide open throttle will usually indicate less than 100%.

Downloaded from SAE International by Tara Casaletto, Monday, January 09, 2023

3.2 Bank—Specific group of cylinders sharing a common control sensor, bank 1 always contains cylinder number 1, bank 2 is the opposite bank.

NOTE— If there is only one bank, use bank #1 DTCs and the word bank may be omitted. With a single "bank" system utilising multiple sensors, use bank #1 DTCs identifying the sensors as #1, #2, #3 in order as they move further away from the cylinder(s).

3.3 Base Fuel Schedule—The fuel calibration schedule programmed into the Powertrain Control Module or PROM when manufactured or when updated by some off-board source, prior to any learned on-board correction.

3.4 Load—Typically Calculated Load Value for spark ignition engines, an indication of the current airflow divided by peak airflow, where peak airflow is corrected for altitude, if available.

NOTE— Peak airflow is typically represented as the maximum theoretical airflow possible (a single number) or is calculated as a function of engine RPM. Either method is acceptable. Mass airflow and barometric pressure sensors are not required for this calculation. This definition provides a unit-less number, and provides the service technician with an indication of the percent engine capacity that is being used.

For diesel applications, the calculated load value shall be determined by the ratio of current measured or calculated output torque to maximum output torque at current engine speed.

3.5 Client—The function that is part of the tester and that makes use of the diagnostic services. A tester normally makes use of other functions such as data base management, specific interpretation, man-machine interface.

3.6 Continuous Monitoring—Sampling at a rate no less than two samples per second.

3.7 Convention (Cvt)—The convention column is integrated in each message table and marks each parameter included.

NOTE— The following conventions are used: C = Conditional: the parameter marked "C" in a request/response message is present only under a condition specified in the bottom row of the message table. M = Mandatory: the parameter marked "M" in a request/response message table shall always be present. U = User optional: the parameter marked "U" in a request/response message table shall or shall not be supplied, depending on dynamic usage by the manufacturer. The convention recommends a mnemonic, which might be used for implementation. In no case is the specified mnemonic a mandatory requirement for any implementation.

3.8 ECM—Engine Control Module

3.9 ECU—Electronic Control Unit is a generic term for any electronic control unit.

3.10 FT—Fuel Trim, feedback adjustments to the base fuel schedule.

NOTE— Short-term fuel trim refers to dynamic or instantaneous adjustments. Long-term fuel trim refers to much more gradual adjustments to the fuel calibration schedule than short-term trim adjustments. These long-term adjustments compensate for vehicle differences and gradual changes that occur over time.

Downloaded from SAE International by Tara Casaletto, Monday, January 09, 2023

3.11 Negative Numbers

— signed binary - the most significant bit (MSB) of the binary number is used to indicate positive (0) / negative (1)
— 2s complement - negative numbers are represented by complementing the binary number and then adding 1

EXAMPLE –0.99 = 8001 hex = 1000 0000 0000 0001 binary

0 = 0000 hex = 0000 0000 0000 0000 binary

+0.99 = 7FFF hex = 0111 1111 1111 1111 binary

NOTE (–0.99) + (+0.99) = 0

3.12 Number—Is expressed by this symbol "#".

3.13 P2, P3 Timing Parameter—Both parameters are application timing parameters for the ECU(s) and the external test equipment.

3.14 PCM—Powertrain Control Module

3.15 Server—A function that is part of an electronic control unit and that provides the diagnostic services.

NOTE— This document differentiates between the Server (i.e., the function) and the electronic control unit so that this document remains independent from the implementation.

3.16 Service—An information exchange initiated by a client (external test equipment) in order to require diagnostic information from a server (ECU) or/and to modify its behaviour for diagnostic purpose.

NOTE— This is also the equivalent of test mode or mode.

3.17 SI—Abbreviation for International System of Units.

3.18 TCM—Transmission Control Module

4. Technical Requirements

4.1 Diagnostic Service, General Requirements—The requirements specified in this section are necessary to ensure proper operation of both the external test equipment and the vehicle during diagnostic procedures. External test equipment, when using messages specified, shall not affect normal operation of the emission control system.

4.1.1 MULTIPLE RESPONSES TO A SINGLE DATA REQUEST—The request messages are functional messages, which means the external test equipment will request data without knowledge of which ECU(s) on the vehicle will respond. In some vehicles, multiple ECUs may respond with the information requested. Any external test equipment requesting information shall, therefore, have provisions for receiving multiple responses.

4.1.2 APPLICATION TIMING PARAMETER DEFINITION—The definition of P2 and P3 is included in this section. A subscript is added to each timing parameter to identify the protocol:

— $P2_{K\text{-}Line}$, $P3_{K\text{-}Line}$: P2, P3 for ISO 9141-2 and ISO 14230-4 protocols
— $P2_{J1850}$: P2 for SAE J1850 protocol
— $P2_{CAN}$: P2 for ISO 15765-4 protocol

Downloaded from SAE International by Tara Casaletto, Monday, January 09, 2023

4.1.2.1 Definition for ISO 9141-2—For ISO 9141-2 interfaces, Data Link Layer response time requirements are specified in ISO 9141-2.

The table below specifies the application timing parameter values for P2 and P3.

TABLE 2—DEFINITION OF ISO 9141-2 APPLICATION TIMING PARAMETER VALUES

Parameter	Minimum value (ms)	Maximum value (ms)	Description
$P2_{K\text{-}Line}$ Key Bytes: $08 $08 One or more ECU(s)	25	50	Time between external test equipment request message and the successful transmission of the ECU(s) response message(s). Each OBD ECU shall start sending its response message within $P2_{K\text{-}Line}$ after the request message has been correctly received. Subsequent response messages shall also be transmitted within $P2_{K\text{-}Line}$ of the previous response message for multiple message responses.
$P2_{K\text{-}Line}$ Key Bytes: $94 $94 Only one ECU	0	50	Time between external test equipment request message and the successful transmission of the ECU response message(s). The OBD ECU shall start sending its response message within $P2_{K\text{-}Line}$ after the request message has been correctly received. Subsequent response messages shall also be transmitted within $P2_{K\text{-}Line}$ of the previous response message for multiple message responses.
$P3_{K\text{-}Line}$	55	5000	Time between the end of an ECU(s) successful transmission of response message(s) and start of new external test equipment request message. The external test equipment may send a new request message if all response messages related to the previously sent request message have been received and if $P3_{K\text{-}Line}$ minimum time expired.

4.1.2.2 Definition for ISO 14230-4—For ISO 14230-4 interfaces, Data Link Layer response time requirements are specified in ISO 14230-4

The table below specifies the application timing parameter values for P2 and P3.

TABLE 3—DEFINITION OF ISO 14230-4 APPLICATION TIMING PARAMETER VALUES

Parameter	Minimum value (ms)	Maximum value (ms)	Description
$P2_{K\text{-}Line}$	25	50	Time between external test equipment request message and the successful transmission of the ECU(s) response message(s). Each OBD ECU shall start sending its response message within $P2_{K\text{-}Line}$ after the request message has been correctly received. Subsequent response messages shall also be transmitted within $P2_{K\text{-}Line}$ of the previous response message for multiple message responses.
$P3_{K\text{-}Line}$	55	5000	Time between the end of an ECU(s) successful transmission of response message(s) and start of new external test equipment request message. The external test equipment may send a new request message if all response messages related to the previously sent request message have been received and if $P3_{K\text{-}Line}$ minimum time expired.

Downloaded from SAE International by Tara Casaletto, Monday, January 09, 2023

4.1.2.3 *Definition for SAE J1850*—For SAE J1850 network interfaces, the on-board systems shall respond to a request within $P2_{J1850}$ of a request or a previous response message. With multiple response messages possible from a single request message, this allows as much time as is necessary for all ECUs to access the data link and transmit their response message(s). If there is no response message within this time period, the external test equipment can either assume no response message will be received, or if a response message has already been received, that no more response messages will be received. The application timing parameter value $P2_{J1850}$ is specified in the table below.

TABLE 4—DEFINITION OF SAE J1850 APPLICATION TIMING PARAMETER VALUES

Parameter	Minimum value (ms)	Maximum value (ms)	Description
$P2_{J1850}$	0	100	Time between external test equipment request message and the successful transmission of the ECU(s) response message(s). Each OBD ECU shall attempt to send its response message (or at least the first of multiple response messages) within $P2_{J1850}$ after the request message has been correctly received. Subsequent response messages shall also be transmitted within $P2_{J1850}$ of the previous response message for multiple message responses.

4.1.2.4 *Definition for ISO 15765-4*—For CAN bus systems based on ISO 15765-4, the (all) responding ECU(s) of the on-board system shall respond to a request message within $P2_{CAN}$. The table below specifies the application timing parameter values for P2.

TABLE 5—DEFINITION OF ISO 15765-4 APPLICATION TIMING PARAMETER VALUES

Parameter	Minimum value (ms)	Maximum value (ms)	Description
$P2_{CAN}$	0	50	Time between external test equipment request message and the receipt of all unsegmented response messages and all first frames of segmented response message(s). Each OBD ECU shall start sending its response message within $P2_{CAN}$ after the request message has been correctly received.
$P2^*_{CAN}$	0	5000	Time between the successful reception of a negative response message with response code $78 and the next response message (positive or negative message).

4.1.3 MINIMUM TIME BETWEEN REQUESTS FROM EXTERNAL TEST EQUIPMENT

4.1.3.1 *ISO 9141-2, ISO 14230-4 - Minimum Time Between Requests from External Test Equipment*—For ISO 9141-2 (K-Line) interfaces, the required times between request messages are specified in the ISO 9141-2.

For ISO 14230-4 (K-Line) interfaces, the required times between request messages are specified in the ISO 14230-4.

The figure below shows an example of a request message followed by four (4) response messages and another request message.

Downloaded from SAE International by Tara Casaletto, Monday, January 09, 2023

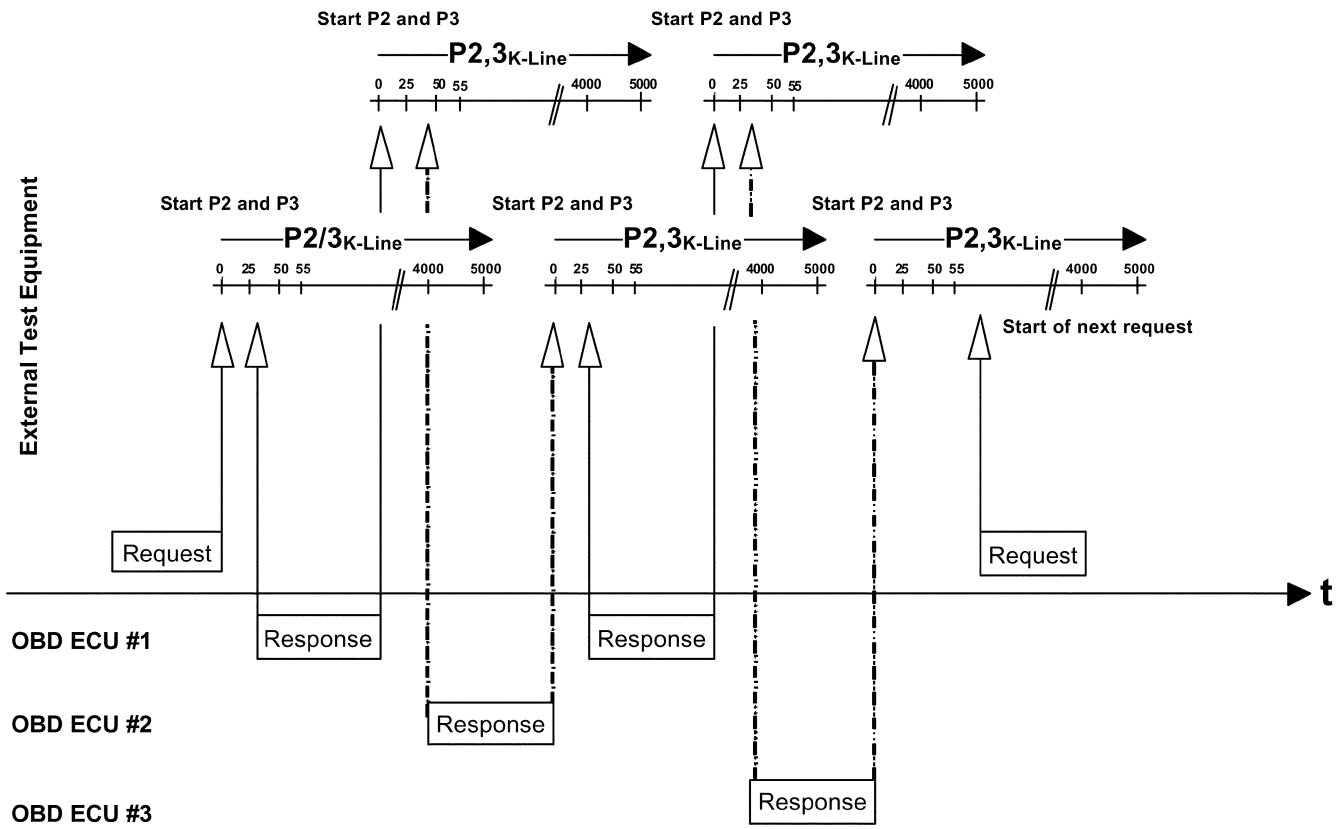

FIGURE 1—ISO 9141-2 (KEY BYTES: $08 $08) AND ISO 14230-4
APPLICATION TIMING PARAMETER OVERVIEW

4.1.3.2 *SAE J1850 - Minimum Tme Between Requests from External Test Equipment*—For SAE J1850 network interfaces, an external test equipment shall always wait for a response message from the previous request, or “no response” time-out before sending another request message. If the number of response messages is known and all response messages have been received then the external test equipment is permitted to send the next request message immediately. If the number of response messages is not known then the external test equipment shall wait at least $P2_{J1850}$ maximum time.

The figure below shows an example of a request message followed by four (4) response messages and another request message.

Downloaded from SAE International by Tara Casaletto, Monday, January 09, 2023

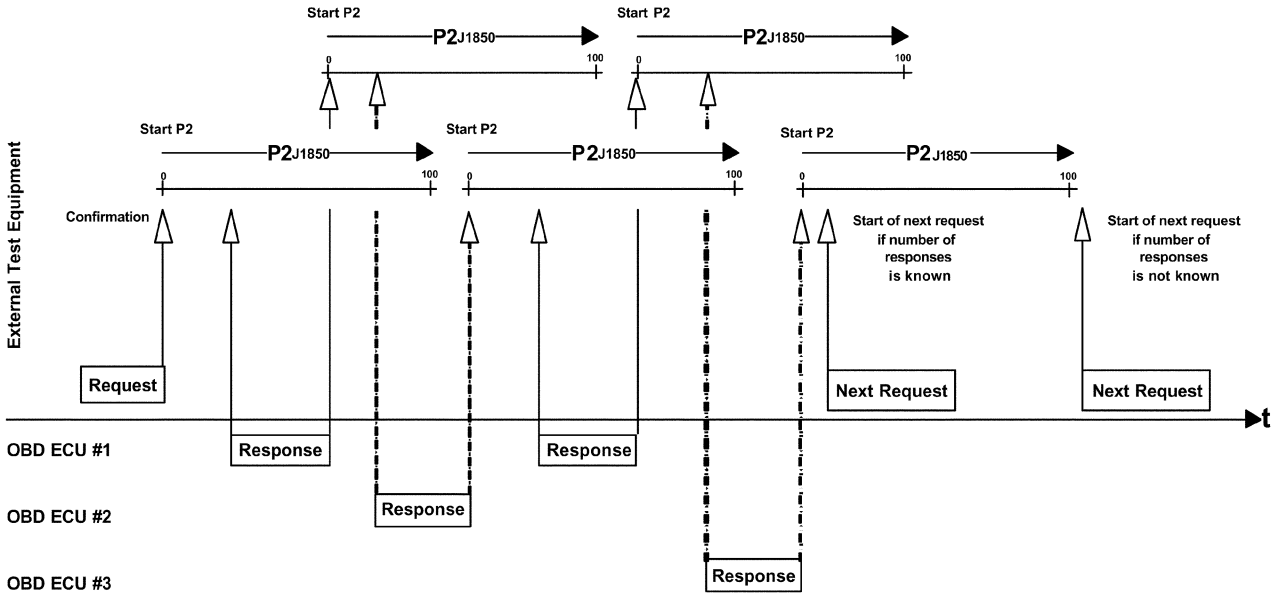

FIGURE 2—SAE J1850 APPLICATION TIMING PARAMETER OVERVIEW

4.1.3.3 *ISO 15765-4 - Minimum Time Between Requests from External Test Equipment*—For ISO 15765-4 network interfaces, the external test equipment may send a new request message immediately after it has determined that all responses related to the previously sent request message have been received. If the external test equipment does not know whether it has received all response messages (e.g., after sending the initial OBD request message: Service $01, PID $00) it shall wait ($P2_{CAN}$ maximum) after the last request (if no responses are sent) or the last response message. The timer $P2_{CAN}$ of the external test equipment starts with the confirmation of a successful transmission of the request message.

The figure below shows an example of a request message followed by three (3) single frame response messages and another request message.

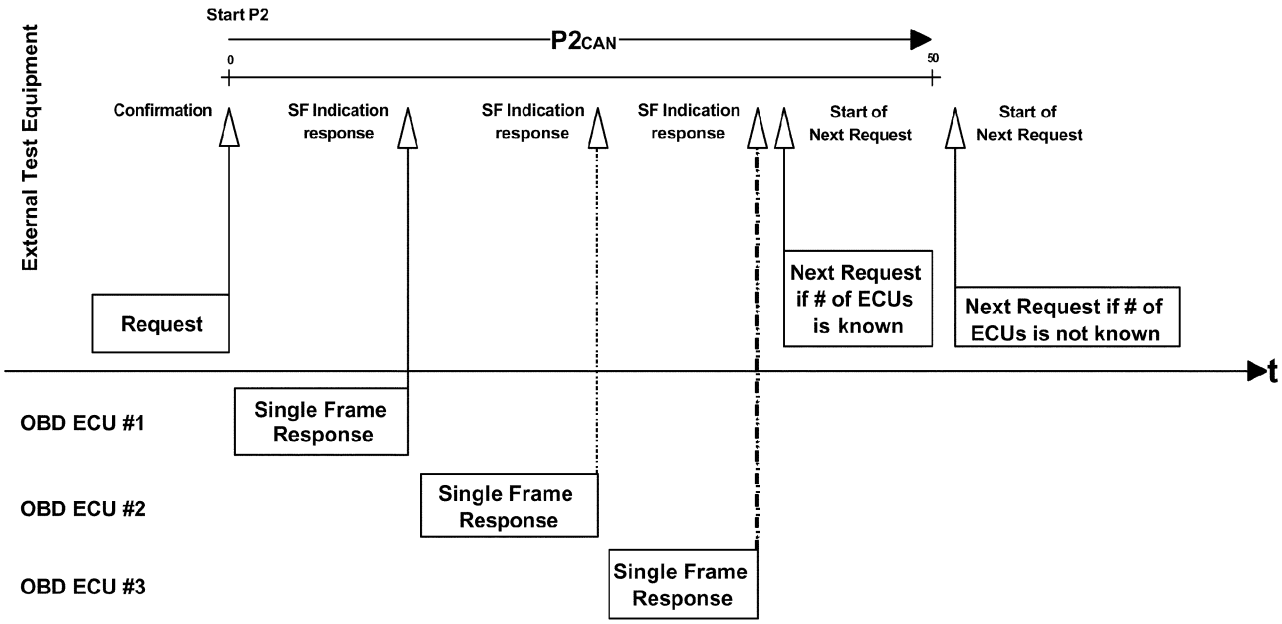

FIGURE 3—ISO 15765-4 APPLICATION TIMING PARAMETER (SINGLE FRAME RESPONSE MESSAGES) OVERVIEW

Downloaded from SAE International by Tara Casaletto, Monday, January 09, 2023

The figure below shows an example of a request message followed by two (2) single frames, one (1) multiple frame response message and another request message. The next request message can be sent immediately by the external test equipment after completion of all response messages in case the transmission of the response messages takes longer than $P2_{CAN}$ even if the external test equipment does not know the number of responding ECUs.

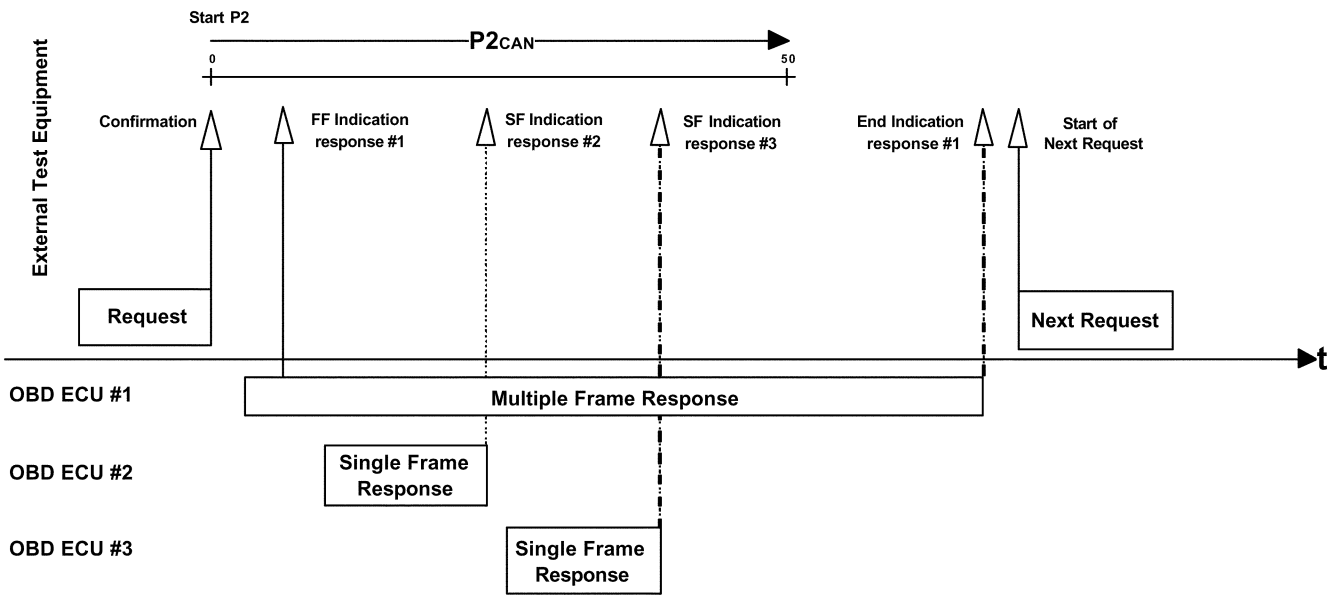

FIGURE 4—ISO 15765-4 APPLICATION TIMING PARAMETER (SINGLE AND MULTIPLE FRAME RESPONSE MESSAGES NOT FINISHED WITHIN $P2_{CAN}$) OVERVIEW

NOTE— The Network Layer timing parameters for the multiple frame response are not shown. Network Layer timing requirements for legislated diagnostic messages are specified in ISO 15765-4.

The figure below shows an example of a request message followed by one (1) single frame, one (1) multiple frame response message (completion within $P2_{CAN}$) and another request message. The next request message can be sent immediately by the external test equipment after completion of all response messages if the external test equipment knows the number of responding ECUs. If not, it needs to wait with the next request message to send until $P2_{CAN}$ is expired.

Downloaded from SAE International by Tara Casaletto, Monday, January 09, 2023

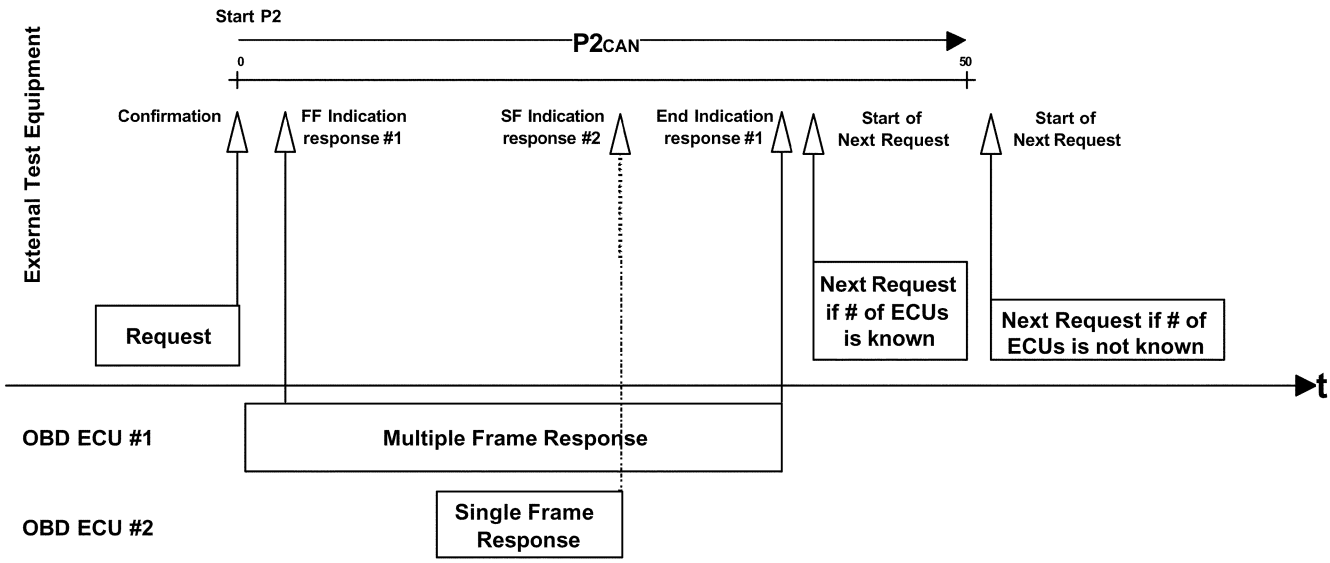

FIGURE 5—ISO 15765-4 APPLICATION TIMING PARAMETER (SINGLE AND MULTIPLE FRAME RESPONSE MESSAGES WITHIN $P2_{CAN}$) OVERVIEW

NOTE— The Network Layer timing parameters for the multiple frame response are not shown. Network Layer timing requirements for legislated diagnostic messages are specified in ISO 15765-4.

4.1.3.4 *ISO 15765-4 - ECU Behaviour to a Request for Supported/Non Supported OBD Information*—The figure below shows an example of a typical vehicle OBD configuration.

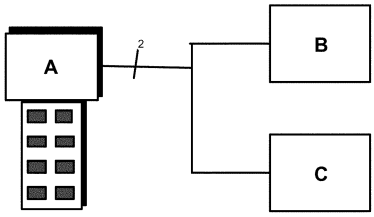

A = External test equipment; B = ECM (Engine Control Module); C = TCM (Transmission Control Module)

FIGURE 6—EXTERNAL TEST EQUIPMENT CONNECTED TO TWO (2) OBD ECUS

NOTE— A service shall only be implemented by an ECU if supported with data (e.g., PID/OBD Monitor ID/Test ID/InfoType supported).

Typically the ECM supports OBD Monitor IDs which the TCM does not support. In case the external test equipment requests the status of such OBD Monitor ID supported by the ECM, the ECM sends a positive response message and the TCM does not send a response message (no negative response message allowed). The external test equipment knows that the TCM will not send a positive response message based on the OBD Monitor ID supported information retrieved prior to the latter request.

This shall be implemented to enhance the overall diagnostic communication performance between the external test equipment and the vehicle ECUs (see Section 4.1.3.3).

Downloaded from SAE International by Tara Casaletto, Monday, January 09, 2023

4.1.4 DATA NOT AVAILABLE

4.1.4.1 ISO 9141-2, ISO 14230-4, and SAE J1850 - Data Not Available—There are two conditions for which data is not available. One condition is that the service is not supported, and the other is that the service is supported but data is currently not available.

For SAE J1850 and ISO 9141-2 interfaces, there will be no reject message to a functional request message if the request is not supported by the ECU. This prevents response messages from all ECUs that do not support a service or a specific data value.

For ISO 14230-4 interfaces, there will be a response message to every request message either positive (with data) or negative. In order to avoid unnecessary communication the ECU(s) which does (do) not support a functionally requested PID, TID, or INFOTYPE is permitted to not send a negative response message because another ECU will send a positive response message. Format and possible codes of negative responses are specified in Section 4.2.4.

Some services are supported by a vehicle, but data may not always be available when requested. For services $05 and $06, if the test has not been run since test results were cleared, or for service $02 if freeze frame data has not been stored, or for service $09 if the engine is running, valid data will not be available. For these conditions, the manufacturer has the option either to not respond or to respond with data that is invalid (ISO 9141-2 and SAE J1850 only). The functional description for these services discuss the method to determine if the data is valid.

4.1.4.2 ISO 15765-4 - Data Not Available—There are four (4) conditions for which data is not available:

a. Request message is not supported: The ECU(s) which does (do) not support the functional request message shall not send any response message.
b. Request message is supported but data is not supported: The ECU(s) which does (do) support the functional request message but does (do) not support the requested data (e.g., PID, OBD Monitor ID, TID, or INFOTYPE) is (are) not allowed to send a negative response message because another ECU will send a positive response message. If the external test equipment sends a message including multiple PIDs and each emission-related ECU does not support all requested PIDs then each ECU shall send a positive response message including the supported PID(s) and data values and shall not send a negative response message. If an ECU does not support any of the PIDs requested it is not allowed to send a negative response message.
c. Request message is supported but data is currently not available: The ECU(s) which does (do) support the functional request message but does (do) not currently have the requested data available shall respond with a negative response message with response code $22 - ConditionsNotCorrect (negative response message format is specified in Section 4.2.3). For service $06 the use of a negative response message including response code $22 is not permitted. For services $04 and $09 the use of negative response code $22 is allowed only during conditions specified by OBD regulations.
d. ECU(s) and the external test equipment is specified in Section 4.1.4.3.

4.1.4.3 Data Not Available Within P2 Tming—The following sections specify the request/response message handling for each protocol if the data is not available within the P2 timing in the ECU(s).

4.1.4.3.1 ISO 9141-2 - Data not available within P2 timing—The following description only applies to service $09, InfoType $06 Calibration Verification Numbers.

The ECU(s) which does (do) support the functional request message but does (do) not have the requested data available within P2 timing, a retry request message handling shall be performed as follows:

Downloaded from SAE International by Tara Casaletto, Monday, January 09, 2023

a. If the response message is not received within $P2_{K\text{-}Line}$, the external test equipment shall stop retrying the request message after one (1) minute from the original request.
b. The retry message shall be sent at least every four (4) seconds (between 55 ms and 4000 ms). The retry message keeps the bus alive and prevents the external test equipment from having to re-initialise the bus ($P3_{K\text{-}Line}$ time out).
c. The ECUs, which either have already sent a positive response message or have not sent a positive response message shall not restart the requested internal routine again.
d. The external test equipment shall record if all ECUs have sent the expected number of response messages.
e. After successful completion of all response messages, the external test equipment is required to send a request message which is “not equal” to the “Repeated Request” message.

Additional description is included in the functional description of the corresponding service.

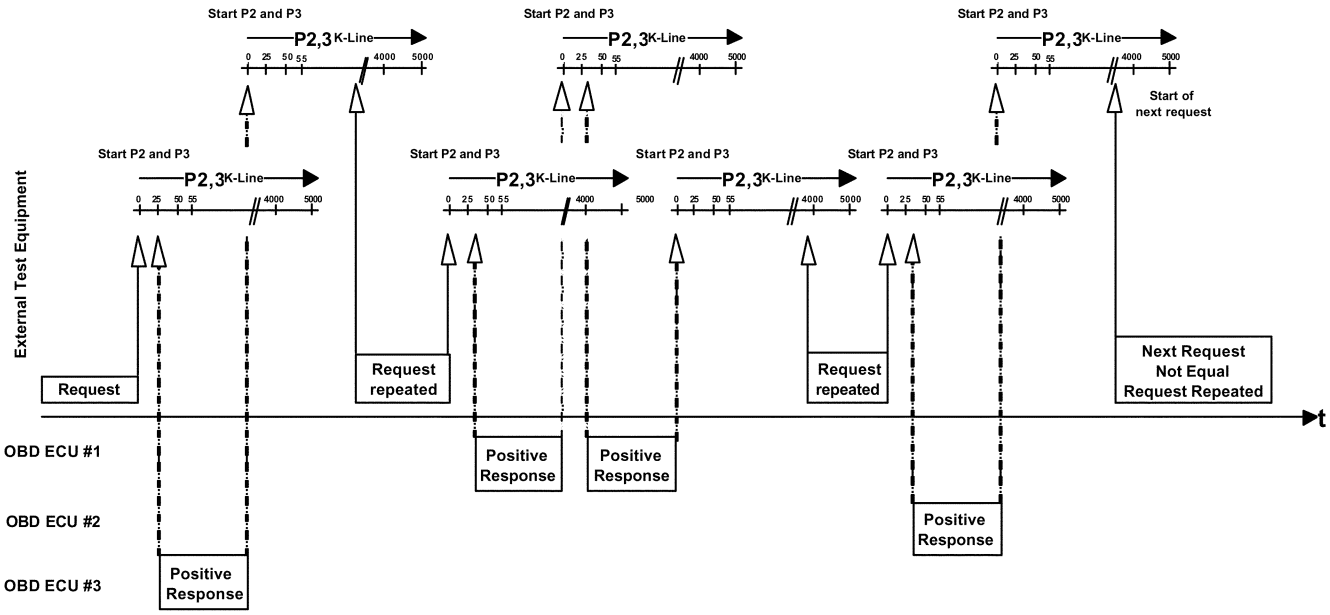

FIGURE 7—ISO 9141-2 (KEY BYTES: $08 $08) - DATA NOT AVAILABLE WITHIN P2 TIMING HANDLING OVERVIEW

NOTE— For ISO 9141-2 with key bytes $94 $94 the response message timing $P2_{K\text{-}Line}$ shall be according to table “Definition of ISO 9141-2 application timing parameter values”.

Downloaded from SAE International by Tara Casaletto, Monday, January 09, 2023

4.1.4.3.2 ISO 14230-4 - Data Not Available Within P2 Timing—The ECU(s) which does (do) support the functional request message but does (do) not have the requested data available within P2 timing, shall perform the following handling:

a. The ECU(s) shall respond with a negative response message with response code $78 - RequestCorrectlyReceived-ResponsePending within P2 timing.
b. ECUs which require more time than $P2_{K\text{-}Line}$ to perform the requested action shall repeat the negative response message with response code $78 prior to expiration of $P2_{K\text{-}Line}$ until the positive response message is available.
c. After all positive response messages have been received or a time out $P2_{K\text{-}Line}$ max has occurred the external test equipment shall wait until $P3_{K\text{-}Line}$min. is reached to send a new request message.

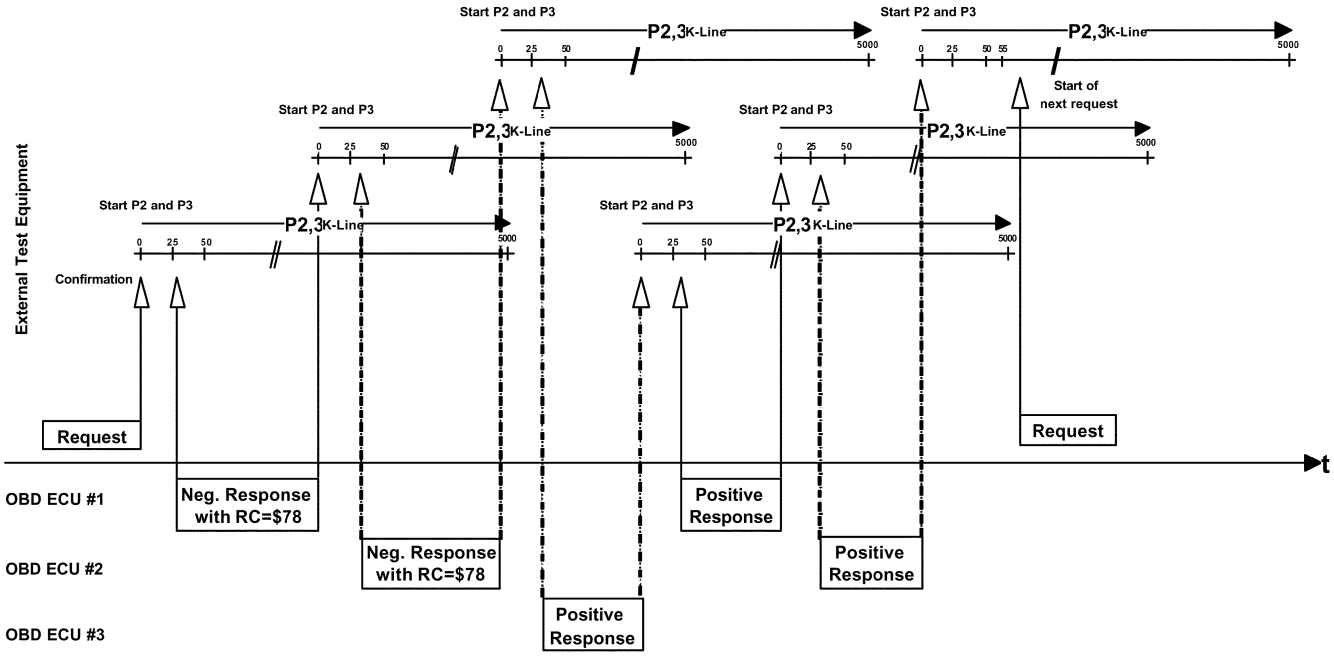

RC78Pending Counter	0	+1=1	+1=2	no change	-1=1	-1=0
RC78Pending ECUList		ECU#1	ECU#1 ECU#2	no change	~~ECU#1~~ ECU#2	~~ECU#1~~ ~~ECU#2~~
P2Reload Value in ms	50	5000	5000	no change	no change	50

FIGURE 8—ISO 14230-4 - NEGATIVE RESPONSE CODE RC=$78 HANDLING OVERVIEW

Downloaded from SAE International by Tara Casaletto, Monday, January 09, 2023

4.1.4.3.3 SAE J1850 - Data Not Available Within P2 Timing—The ECU(s) which does (do) support the functional request message but does (do) not have the requested data available within P2 timing, a retry request message handling shall be performed as follows:

a. If the response message is not received within $P2_{J1850}$, the external test equipment shall stop retrying the request message after one (1) minute from the original request.
b. The retry message shall be repeated after thirty (30 ±1) seconds.
c. The external test equipment shall record if all ECUs have sent the expected number of response messages.

Additional description is included in the functional description of the corresponding service.

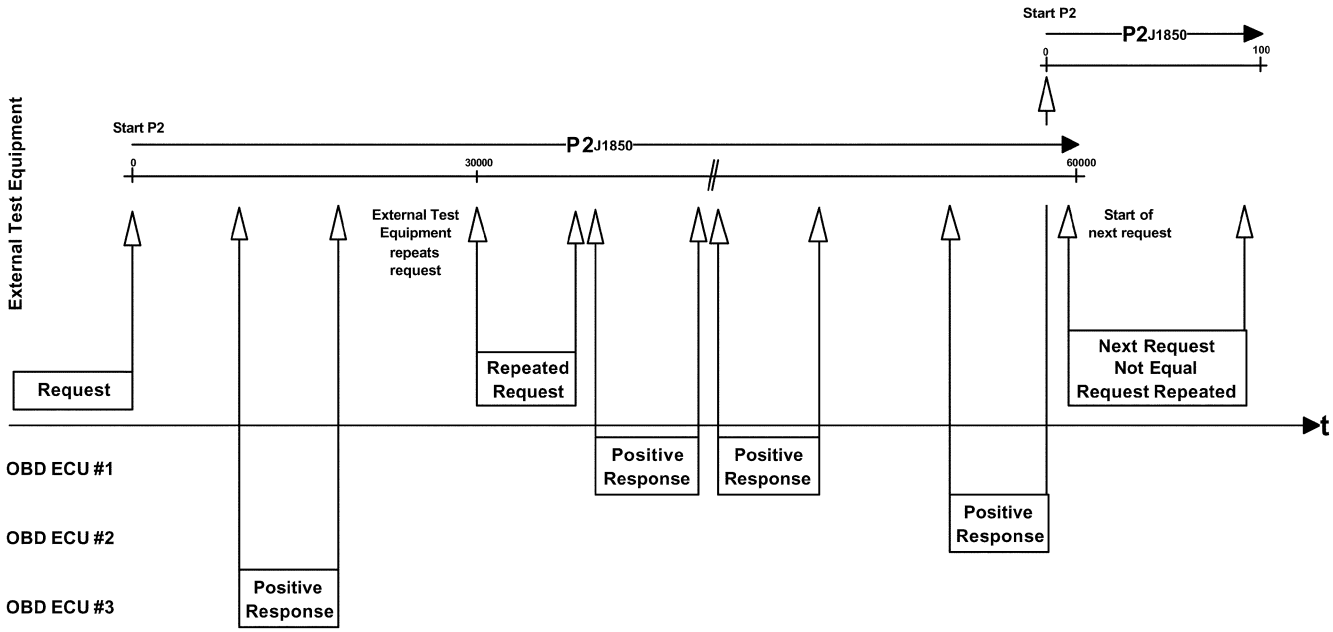

FIGURE 9—SAE J1850 - DATA NOT AVAILABLE WITHIN P2 TIMING HANDLING OVERVIEW

4.1.4.3.4 ISO 15765-4 - Data Not Available Within P2 Timing—The ECU(s) which does (do) support the functional request message but does (do) not have the requested data available within P2 timing, shall perform the following handling:

a. The ECU(s) shall respond with a negative response message with response code $78 - RequestCorrectlyReceived-ResponsePending within P2 timing.
b. After correct reception of the negative response message with response code $78 the $P2_{CAN}$max parameter timing value shall be set to $P2^*_{CAN}$ (5000 ms) by the external test equipment and the ECU which has sent the negative response message.
c. If another ECU also sends a negative response message with response code $78 the $P2_{CAN}$max timing parameter value shall be reset to $P2^*_{CAN}$.
d. ECUs which require more than $P2^*_{CAN}$ to perform the requested action shall repeat the negative response message with response code $78 prior to expiration of $P2^*_{CAN}$ until correct reception of the positive response message.
e. After all positive response messages have been received or time out $P2^*_{CAN}$max has occurred the $P2_{CAN}$max timing parameter shall be reset to the values specified in table - Definition of ISO 15765-4 application timing parameter values.

The figure below shows the negative response message handling with response code $78 for the ISO 15765-4 interface.

Downloaded from SAE International by Tara Casaletto, Monday, January 09, 2023

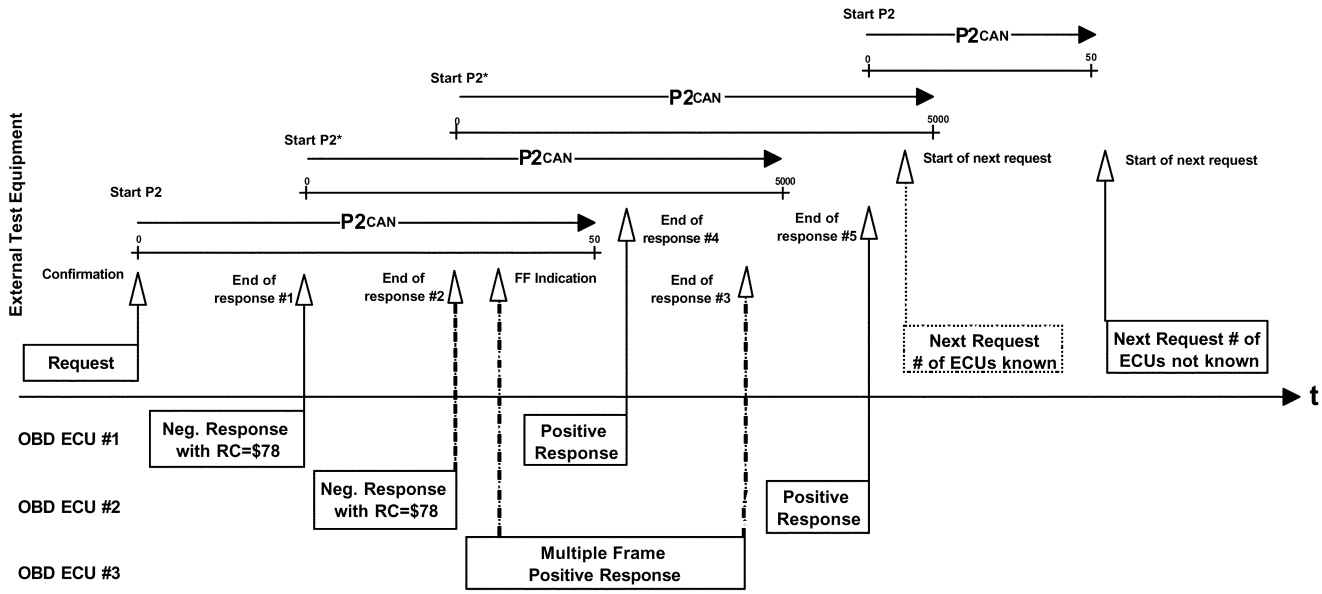

RC78Pending Counter	0	+1=1	+1=2	no change	-1=1	-1=0
RC78Pending ECUList		ECU#1	ECU#1 ECU#2	no change	~~ECU#1~~ ECU#2	~~ECU#1~~ ~~ECU#2~~
P2Reload Value in ms	50	5000	5000	no change	no change	50

FIGURE 10—ISO 15765-4 - NEGATIVE RESPONSE CODE RC=$78 HANDLING OVERVIEW

4.1.5 MAXIMUM VALUES—If the data value exceeds the maximum value possible to be sent, the on-board system shall send the maximum value possible ($FF or $FFFF). The external test equipment shall display the maximum value or an indication of data too high. This is not normally critical for real time diagnostics, but for example in the case of a misfire at high vehicle speed with resulting freeze frame data stored, this will be very valuable diagnostic information.

4.2 Diagnostic Message Format

4.2.1 ADDRESSING METHOD—Functional addressing shall be used for all request messages because the external test equipment does not know which system on the vehicle has the information that is needed.

4.2.2 MAXIMUM MESSAGE LENGTH

4.2.2.1 ISO 9141-2, ISO 14230-4, SAE J1850 - Maximum Message Length—The maximum message length for request and response messages is limited to seven (7) data bytes.

For SAE J1850 and ISO 9141-2 interfaces each unique diagnostic message specified in this document is a fixed length, although not all messages are the same length. For services $01 and $02, message length is determined by parameter identification (PID). For service $05, message length is determined by Test ID. For other services, the message length is determined by the service. This enables the external test equipment to check for proper message length, and to recognise the end of the message without waiting for possible additional data bytes. For ISO 14230-4 interfaces, the message length is always determined by the length information included in the first byte of the header.

4.2.2.2 ISO 15765-4 - Maximum Message Length—The maximum message length is specified in ISO 15765-2. For request messages the message length is limited to seven (7) data bytes.

Downloaded from SAE International by Tara Casaletto, Monday, January 09, 2023

4.2.3 REQUEST/RESPONSE MESSAGE FORMAT

4.2.3.1 ISO 9141-2, ISO 14230-4, SAE J1850, ISO 15765-4 - Request Message Format—The following table specifies the format of the request message.

TABLE 6—REQUEST MESSAGE FORMAT FOR ISO 9141-2, ISO 14230-4, SAE J1850, ISO 15765-4

Data Byte	Parameter Name	Cvt	Hex Value	Mnemonic
#1	**Request Service Identifier**	**M**	**xx**	**SIDRQ**
#2	service specific data byte#1	U	xx	---
#3	service specific data byte#2	U	xx	---
#4	service specific data byte#3	U	xx	---
#5	service specific data byte#4	U	xx	---
#6	service specific data byte#5	U	xx	---
#7	service specific data byte#6	U	xx	---

The message format defined for some services for the ISO 15765-4 protocol allows for an optional number of data bytes in the request message sent by the external test equipment. If these are included in the request message, support of those optional data bytes becomes mandatory for the server/ECU.

4.2.3.2 ISO 9141-2, ISO 14230-4, SAE J1850 - Positive Response Message Format—The following table specifies the format of the positive response message.

TABLE 7—POSITIVE RESPONSE MESSAGE FORMAT FOR ISO 9141-2, ISO 14230-4, SAE J1850

Data Byte	Parameter Name	Cvt	Hex Value	Mnemonic
#1	**Positive Response Service Identifier**	**M**	**xx**	**SIDPR**
#2	service specific data byte#1	U	xx	---
#3	service specific data byte#2	U	xx	---
#4	service specific data byte#3	U	xx	---
#5	service specific data byte#4	U	xx	---
#6	service specific data byte#5	U	xx	---
#7	service specific data byte#6	U	xx	---

4.2.3.3 ISO 15765-4 - Positive Response Message Format—The following table specifies the format of the positive response message.

TABLE 8—POSITIVE RESPONSE MESSAGE FORMAT FOR ISO 15765-4

Data Byte	Parameter Name	Cvt	Hex Value	Mnemonic
#1	**Positive Response Service Identifier**	**M**	**xx**	**SIDPR**
#2	service specific data byte#1	U	xx	---
#3	service specific data byte#2	U	xx	---
#4	service specific data byte#3	U	xx	---
:	:	:	:	:
#n-2	service specific data byte#m-2	U	xx	---
#n-1	service specific data byte#m-1	U	xx	---
#n	service specific data byte#m	U	xx	---

n: this value depends on the response message length
m: this value depends on the response message length – 1

Downloaded from SAE International by Tara Casaletto, Monday, January 09, 2023

4.2.3.4 ISO 14230-4, ISO 15765-4 - Negative Response Message Format—This section includes additions, exceptions, and/or restrictions for the ISO standards which apply.

The following table specifies the format of the negative response message.

TABLE 9—NEGATIVE RESPONSE MESSAGE FORMAT FOR ISO 14230-4, ISO 15765-4

Data Byte	Parameter Name	Cvt	Hex Value	Mnemonic
#1	Negative Response Service Identifier	M	7F	SIDNR
#2	Request Service Identifier	M	xx	SIDRQ
#3	ResponseCode	M	xx	RC_

4.2.4 RESPONSE CODE PARAMETER DEFINITION—Response codes shall be implemented in an ECU which supports a service(s) not having valid data available at the time of a request or can not respond with valid data available within $P2_{K\text{-}Line}$ and $P2_{CAN}$ timing.

TABLE 10—NEGATIVE RESPONSE CODE DEFINITION

Supported by ISO	Hex Value	Definition of Response Code	Mnemonic
14230-4	10	**generalReject** This response code indicates that the service is rejected but the server (ECU) does not specify the reason of the rejection.	GR
14230-4	11	**serviceNotSupported** This response code indicates that the requested action will not be taken because the server (ECU) does not support the requested service.	SNS
14230-4	12	**subFunctionNotSupported-InvalidFormat** This response code indicates that the requested action will not be taken because the server (ECU) does not support the arguments of the request message or the format of the argument bytes do not match the prescribed format for the specified service.	SFNSIF
14230-4 15765-4	21	**busy-RepeatRequest** This response code indicates that the server (ECU) is temporarily too busy to perform the requested operation. For ISO 15765-4 protocol the client (external test equipment) shall behave as defined in ISO 15765-4. In a multi-client (more than one external test equipment, e.g., telematic client) environment the diagnostic request message of one client might be blocked temporarily by a negative response message with response code $21 while another client finishes a diagnostic task. Therefore this negative response code is only allowed to be used during the initialisation sequence of the protocol. NOTE If the server (ECU) is able to perform the diagnostic task but needs additional time to finish the task and prepares the response message, the negative response message with response code $78 shall be used instead of $21.	BRR
14230-4 15765-4	22	**conditionsNotCorrectOrRequestSequenceError** This response code indicates that the requested action will not be taken because the server (ECU) prerequisite conditions are not met. This request may also occur when sequence sensitive requests are issued in the wrong order.	CNCORSE
14230-4 15765-4	78	**requestCorrectlyReceived-ResponsePending** This response code indicates that the request message was received correctly, and that any parameters in the request message were valid, but the action to be performed may not be completed yet. This response code can be used to indicate that the request message was properly received and does not need to be re-transmitted, but the server (ECU) is not yet ready to receive another request. The negative response message with this response code may be repeated by the ECU(s) within $P2_{K\text{-}Line} = P2_{CAN} = P2^*_{max}$ until the positive response message with the requested data is available.	RCR-RP

Downloaded from SAE International by Tara Casaletto, Monday, January 09, 2023

4.2.5 HEADER BYTE DEFINITION OF ISO 9141-2, ISO 14230-4, AND SAE J1850—The first three (3) bytes of all diagnostic messages are the header bytes.

For SAE J1850 and ISO 9141-2 interfaces the value of the first header byte is dependant on the bit rate of the data link and the type of message, refer to SAE J1850 and ISO 9141-2. The second header byte has a value that depends on the type of message, either a request or a response.

For ISO 14230-4 interfaces, the value of the first header byte indicates the addressing mode (physical/ functional) and the length of the data field. The second header byte is the address of the receiver of the message. The third header byte for all interfaces is the physical address of the sender of the message. The external test equipment has the address $F1. Other service tools shall use addresses in the range from $F0 to $FD. The response to all request messages will be independent of the address of the external test equipment requesting the information. Vehicle manufacturers shall not use the header bytes defined in SAE J1979 for any purpose other than diagnostic messages. When they are used, they shall conform to this specification.

TABLE 11—DIAGNOSTIC MESSAGE FORMAT FOR ISO 9141-2, ISO 14230-4, SAE J1850

Header bytes (Hex)			Data bytes								
Priority/Type	**Target address (hex)**	**Source address (hex)**	**#1**	**#2**	**#3**	**#4**	**#5**	**#6**	**#7**	**ERR**	**RESP**
Diagnostic request at 10.4 kbit/s: SAE J1850 and ISO 9141-2											
68	6A	F1	Maximum 7 data bytes							Yes	No
Diagnostic response at 10.4 kbit/s: SAE J1850 and ISO 9141-2											
48	6B	ECU addr	Maximum 7 data bytes							Yes	No
Diagnostic request at 10.4 kbit/s (ISO 14230-4)											
11LL LLLLb	33	F1	Maximum 7 data bytes							Yes	No
Diagnostic response at 10.4 kbit/s (ISO 14230-4)											
10LL LLLLb	F1	addr	Maximum 7 data bytes							Yes	No
Diagnostic request at 41.6 kbit/s (SAE J1850)											
61	6A	F1	Maximum 7 data bytes							Yes	Yes
Diagnostic response at 41.6 kbit/s (SAE J1850)											
41	6B	addr	Maximum 7 data bytes							Yes	Yes

NOTE— LL LLLL = Length of data bytes; RSP = In-frame response;.ERR = Error Detection

4.2.6 HEADER BYTE DEFINITION OF ISO 15765-4—Each CAN frame is identified by a CAN Identifier. The size of the identifier is either 11 bit or 29 bit. The CAN identifier shall always be followed by an eight (8) byte CAN frame data field (refer to ISO 15765-4 Road vehicles - Diagnostics on Controller Area Network (CAN) – Part 4: Requirements for emissions-related systems; see section “Data length code (DLC)”). Depending on the message type, up to three (3) bytes (FlowControl) are used for the PCI (Protocol Control Information) prior to the Service Identifier (only included in single frame or first frame) and data bytes of the message.

TABLE 12—DIAGNOSTIC MESSAGE FORMAT FOR ISO 15765-4

Header bytes	CAN frame data field							
CAN Identifier (11 or 29 bit)	#1	#2	#3	#4	#5	#6	#7	#8

Downloaded from SAE International by Tara Casaletto, Monday, January 09, 2023

4.2.7 DATA BYTES DEFINITION OF ISO 9141-2, ISO 14230-4, SAE J1850, AND ISO 15765-4—For the ISO 9141-2, ISO 14230-4, and the SAE J1850 protocol the first data byte following the header is the diagnostic service identifier, and the remaining data bytes vary depending on the specific diagnostic service. For the ISO 15765-4 protocol the first data byte following the CAN Identifier in a single frame and first frame is the PCI (Protocol Control Information, number of bytes varies, depending on frame type), then diagnostic service identifier, and the remaining data bytes vary depending on the specific diagnostic service.

4.2.8 NON-DATA BYTES INCLUDED IN DIAGNOSTIC MESSAGES WITH SAE J1850—All diagnostic messages will use a cyclic redundancy check (CRC) as in SAE J1850 as the error detection (ERR) byte. In-frame response (RSP) is specified as optional in SAE J1850. For messages specified in this document, the RSP byte is required in all request and response messages at 41.6 kbit/s, and is not allowed for messages at 10.4 kbit/s. The in-frame response byte shall be the node address of the device transmitting the RSP. SAE J1850 specifies additional message elements that may be included in diagnostic messages. Use of these message elements is beyond the scope of this document, but needs to be considered when specifying total diagnostic messages.

4.2.9 NON-DATA BYTES INCLUDED IN DIAGNOSTIC MESSAGES WITH ISO 9141-2 AND ISO 14230-4—Messages will include a checksum, specified in ISO 9141-2 and ISO 14230-4, after the data bytes as the error detection byte (ERR). There is no provision for an in-frame response.

4.2.10 BIT POSITION CONVENTION—Some data byte values include descriptions that are based on bit positions within the byte. The convention used is that the most significant bit (MSB) is referred to as “bit 7,” and the least significant bit (LSB) is referred to as “bit 0,” as shown in the figure below.

MSB							LSB
7	6	5	4	3	2	1	0

FIGURE 11—BIT POSITION WITHIN A DATA BYTE

4.3 Allowance for Expansion and Enhanced Diagnostic Services—This document allows for the addition of diagnostic services both as industry standards and manufacturer specific services. The diagnostic services $00 through $0F are reserved - to be specified by SAE and/or ISO.

4.4 Definition of PIDs for Service $01 and $02—All PIDs are defined in Appendix B.

4.5 Format of Data to be Displayed—The table below indicates the type of data and minimum requirements for format of the display.

Downloaded from SAE International by Tara Casaletto, Monday, January 09, 2023

TABLE 13—FORMAT OF DATA TO BE DISPLAYED

Data	Services	Display Format
Device ID - source address of response	all	ISO 9141-2:Hexadecimal (00 to FF) ISO 14230-4:Hexadecimal (00 to FF) SAE J1850:Hexadecimal (00 to FF) ISO 15765-4:Hexadecimal (11 bit or 29 bit CAN Identifier)
Parameter ID (PID)	$01 & $02	Hexadecimal (00 to FF) description (see Appendix B)
Frame number	$02	Decimal (0 to 255)
Data values	$01 & $02	See Appendix B
Diagnostic trouble codes	$03 & $07	"P", "B", "C" or "U", plus 4 hexadecimal characters and/or DTC definition - see SAE J2012
Test ID	$05, $06 & $08	Hexadecimal (00 to FF)
Test value and test limits	$05	Engineering units for Test IDs less than $80 (see Appendix C) - Decimal (0 to 255) for test IDs greater than $80
Test value and test limits	$06	Decimal (0 to 65535)
Component ID	$06	Hexadecimal (00 to 7F)
Optional data bytes	$08	4 bytes, each decimal (0 to 255) (see Appendix F)
Vehicle information type	$09	Hexadecimal (00 to 7F) (see Appendix G)
Vehicle information data	$09	ASCII for information types $02 and $04; Hexadecimal for information type $06 Decimal for information type $08 (see Appendix G)

5. Diagnostic Service Definition for ISO 9141-2, ISO 14230-4, and SAE J1850

5.1 Service $01 - Request Current Powertrain Diagnostic Data

5.1.1 FUNCTIONAL DESCRIPTION—The purpose of this service is to allow access to current emission-related data values, including analogue inputs and outputs, digital inputs and outputs, and system status information. The request for information includes a parameter identification (PID) value that indicates to the on-board system the specific information requested. PID specifications, scaling information, and display formats are included in Appendix B.

The ECU(s) will respond to this message by transmitting the requested data value last determined by the system. All data values returned for sensor readings will be actual readings, not default or substitute values used by the system because of a fault with that sensor.

Not all PIDs are applicable or supported by all systems. PID $00 is a bit-encoded PID that indicates, for each ECU, which PIDs that ECU supports. PID $00 shall be supported by all ECUs that respond to a service $01 request, because the external test equipment that conforms to SAE J1978 use the presence of a response message by the vehicle to this request message to determine which protocol is supported for diagnostic communications. Appendix A defines how to encode supported PIDs.

Downloaded from SAE International by Tara Casaletto, Monday, January 09, 2023

5.1.2 MESSAGE DATA BYTES

5.1.2.1 Request Current Powertrain Diagnostic Data Request Message Definition (read supported PIDs)

TABLE 14—REQUEST CURRENT POWERTRAIN DIAGNOSTIC DATA REQUEST MESSAGE (READ SUPPORTED PIDS)

Data Byte	Parameter Name	Cvt	Hex Value	Mnemonic
#1	**Request current powertrain diagnostic data request SID**	**M**	**01**	**SIDRQ**
#2	PID (see Appendix A)	M	xx	PID

5.1.2.2 Request Current Powertrain Diagnostic Data Response Message Definition (report supported PIDs)

TABLE 15—REQUEST CURRENT POWERTRAIN DIAGNOSTIC DATA RESPONSE MESSAGE (REPORT SUPPORTED PIDS)

Data Byte	Parameter Name	Cvt	Hex Value	Mnemonic
#1	**Request current powertrain diagnostic data response SID**	**M**	**41**	**SIDPR**
	data record of supported PID = [			PIDREC_
#2	supported PID	M	xx	PID
#3	data A,	M	xx	DATA_A
#4	data B,	M	xx	DATA_B
#5	data C,	M	xx	DATA_C
#6	data D]	M	xx	DATA_D

5.1.2.3 Request Current Powertrain Diagnostic Data Request Message Definition (read PID value)

TABLE 16—REQUEST CURRENT POWERTRAIN DIAGNOSTIC DATA REQUEST MESSAGE (READ PID VALUE)

Data Byte	Parameter Name	Cvt	Hex Value	Mnemonic
#1	**Request current powertrain diagnostic data request SID**	**M**	**01**	**SIDRQ**
#2	PID (see Appendix B)	M/C	xx	PID
C = Conditional — PID value shall be one of the supported PIDs of previous response message				

5.1.2.4 Request Current Powertrain Diagnostic Data Response Message Definition (Report PID Value)

TABLE 17—REQUEST CURRENT POWERTRAIN DIAGNOSTIC DATA RESPONSE MESSAGE (REPORT PID VALUE)

Data Byte	Parameter Name	Cvt	Hex Value	Mnemonic
#1	**Request current powertrain diagnostic data response SID**	**M**	**41**	**SIDPR**
	data record of 1st supported PID = [			PIDREC_
#2	PID	M	xx	PID
#3	data A,	M	xx	DATA_A
#4	data B,	C	xx	DATA_B
#5	data C,	C	xx	DATA_C
#6	data D]	C	xx	DATA_D
C = Conditional — data B - D depend on selected PID value				

NOTE— The PID, which is included in the request message may be supported by all emission-related ECUs, which shall comply with this specification. Therefore, multiple response messages are sent by the vehicle ECUs.

Downloaded from SAE International by Tara Casaletto, Monday, January 09, 2023

5.1.3 PARAMETER DEFINITION

5.1.3.1 PIDs Supported—"Appendix A" specifies the interpretation of the data record of supported PIDs.

5.1.3.2 PID and Data Byte Descriptions—"Appendix B" specifies standardised emission-related parameters.

5.1.4 MESSAGE EXAMPLE—The example below shows how the "Request current powertrain diagnostic data" service shall be implemented.

5.1.4.1 Step #1: Request Supported PIDs from Vehicle—The external test equipment requests supported PIDs (PID = $00, $20) from the vehicle. Refer to Appendix A to interpret the data bytes in the response messages.

TABLE 18—REQUEST CURRENT POWERTRAIN DIAGNOSTIC DATA REQUEST MESSAGE

Message direction:	**External test equipment → All ECUs**		
Message Type:	**Request**		
Data Byte	**Description (all values are in hexadecimal)**	**Byte Value (Hex)**	**Mnemonic**
#1	Request current powertrain diagnostic data request SID	01	SIDRQ
#2	PID used to determine PID support for PIDs 01-20	00	PID

TABLE 19—REQUEST CURRENT POWERTRAIN DIAGNOSTIC DATA RESPONSE MESSAGE

Message direction:	**ECU#1 → External test equipment**		
Message Type:	**Response**		
Data Byte	**Description (all values are in hexadecimal)**	**Byte Value (Hex)**	**Mnemonic**
#1	Request current powertrain diagnostic data response SID	41	SIDPR
#2	PID requested	00	PID
#3	Data byte A, representing support for PIDs 01, 03-08	10111111b = $BF	DATA_A
#4	Data byte B, representing support for PIDs 09, 0B-10	10111111b = $BF	DATA_B
#5	Data byte C, representing support for PIDs 11, 13, 15	10101000b = $A8	DATA_C
#6	Data byte D, representing support for PIDs 19, 1C, 20	10010001b = $91	DATA_D

TABLE 20—REQUEST CURRENT POWERTRAIN DIAGNOSTIC DATA RESPONSE MESSAGE

Message direction:	**ECU#2 → External test equipment**		
Message Type:	**Response**		
Data Byte	**Description (all values are in hexadecimal)**	**Byte Value (Hex)**	**Mnemonic**
#1	Request current powertrain diagnostic data response SID	41	SIDPR
#2	PID requested	00	PID
#3	Data byte A, representing support for PID 01	10000000b = $80	DATA_A
#4	Data byte B, representing support for PID 0D	00001000b = $08	DATA_B
#5	Data byte C, representing no support for PIDs 11-18	00000000b = $00	DATA_C
#6	Data byte D, representing no support for PIDs 19-20	00000000b = $00	DATA_D

Downloaded from SAE International by Tara Casaletto, Monday, January 09, 2023

TABLE 21—REQUEST CURRENT POWERTRAIN DIAGNOSTIC DATA REQUEST MESSAGE

Message direction:	**External test equipment → All ECUs**		
Message Type:	**Request**		
Data Byte	**Description (all values are in hexadecimal)**	**Byte Value (Hex)**	**Mnemonic**
#1	Request current powertrain diagnostic data request SID	01	SIDRQ
#2	PID requested	20	PID

TABLE 22—REQUEST CURRENT POWERTRAIN DIAGNOSTIC DATA RESPONSE MESSAGE

Message direction:	**ECU#1 → External test equipment**		
Message Type:	**Response**		
Data Byte	**Description (all values are in hexadecimal)**	**Byte Value (Hex)**	**Mnemonic**
#1	Request current powertrain diagnostic data response SID	41	SIDPR
#2	PID requested	20	PID
#3	Data byte A, representing support for PID 21	10000000b = $80	DATA_A
#4	Data byte B, representing no support for PIDs 29-30	00000000b = $00	DATA_B
#5	Data byte C, representing no support for PIDs 31-38	00000000b = $00	DATA_C
#6	Data byte D, representing no support for PIDs 39-40	00000000b = $00	DATA_D

NOTE— ECU #2 does not send a response message because it indicated with the previous response message that it does not support PID $20.

Now the external test equipment creates an internal list of supported PIDs for each ECU. The ECU #1 (ECM) supports the following PIDs: $01, $03 - $09, $0B - $11, $13, $15, $19, $1C, $20, $21. The ECU #2 (TCM) supports the PIDs: $01 and $0D.

5.1.4.2 *Step #2: Request PID from Vehicle*—The external test equipment requests the following PID from the vehicle:

— PID $01:Number of emission-related powertrain DTCs and MIL status, PID is supported by ECU #1 (ECM) and ECU #2 (TCM)

TABLE 23—REQUEST CURRENT POWERTRAIN DIAGNOSTIC DATA REQUEST MESSAGE

Message direction:	External test equipment → All ECUs		
Message Type:	Request		
Data Byte	**Description (all values are in hexadecimal)**	**Byte Value (Hex)**	**Mnemonic**
#1	Request current powertrain diagnostic data request SID	01	SIDRQ
#2	PID: Number of emission-related powertrain DTCs and MIL status	01	PID

Downloaded from SAE International by Tara Casaletto, Monday, January 09, 2023

TABLE 24—REQUEST CURRENT POWERTRAIN DIAGNOSTIC DATA RESPONSE MESSAGE

Message direction:	ECU#1 → External test equipment		
Message Type:	Response		
Data Byte	**Description (all values are in hexadecimal)**	**Byte Value (Hex)**	**Mnemonic**
#1	Request current powertrain diagnostic data response SID	41	SIDPR
#2	PID: Number of emission-related powertrain DTCs and MIL status	01	PID
#3	MIL: ON; Number of emission-related powertrain DTCs: 01	81	DATA_A
#4	Misfire -, Fuel system -, Comprehensive monitoring	33	DATA_B
#5	Catalyst -, Heated catalyst -, …, monitoring supported	FF	DATA_C
#6	Catalyst -, Heated catalyst -, …, monitoring test complete/not complete	63	DATA_D

TABLE 25—REQUEST CURRENT POWERTRAIN DIAGNOSTIC DATA RESPONSE MESSAGE

Message direction:	ECU#2 → External test equipment		
Message Type:	Response		
Data Byte	**Description (all values are in hexadecimal)**	**Byte Value (Hex)**	**Mnemonic**
#1	Request current powertrain diagnostic data response SID	41	SIDPR
#2	PID: Number of emission-related powertrain DTCs and MIL status	01	PID
#3	MIL: OFF; Number of emission-related powertrain DTCs: 01	01	DATA_A
#4	Comprehensive monitoring: supported, test complete	44	DATA_B
#5	Catalyst -, Heated catalyst -, …, monitoring supported	00	DATA_C
#6	Catalyst -, Heated catalyst -, …, monitoring test complete/not complete	00	DATA_D

The external test equipment requests the following PID from the vehicle:

— PID $19: Bank 2 - Sensor 2, PID is supported by ECU #1 (ECM)

TABLE 26—REQUEST CURRENT POWERTRAIN DIAGNOSTIC DATA REQUEST MESSAGE

Message direction:	External test equipment → All ECUs		
Message Type:	Request		
Data Byte	**Description (all values are in hexadecimal)**	**Byte Value (Hex)**	**Mnemonic**
#1	Request current powertrain diagnostic data request SID	01	SIDRQ
#2	PID: Oxygen Sensor Output Voltage (B2 - S2) Short Term Fuel Trim (B2 - S2)	19	PID

Downloaded from SAE International by Tara Casaletto, Monday, January 09, 2023

TABLE 27—REQUEST CURRENT POWERTRAIN DIAGNOSTIC DATA RESPONSE MESSAGE

Message direction:	ECU#1 → External test equipment		
Message Type:	Response		
Data Byte	**Description (all values are in hexadecimal)**	**Byte Value (Hex)**	**Mnemonic**
#1	Request current powertrain diagnostic data response SID	41	SIDPR
#2	PID: Oxygen Sensor Output Voltage (B2 - S2) Short Term Fuel Trim (B2 - S2)	19	PID
#3	Oxygen Sensor Output Voltage (B2 - S2): 0.8 Volt	A0	DATA_A
#4	Short Term Fuel Trim (B2 - S2): 93.7 %	78	DATA_B

NOTE— ECU#2 does not support PID $19 and therefore does not send a response message.

5.2 Service $02 - Request Powertrain Freeze Frame Data

5.2.1 FUNCTIONAL DESCRIPTION—The purpose of this service is to allow access to emission-related data values in a freeze frame. This allows expansion to meet manufacturer specific requirements not necessarily related to the required freeze frame, and not necessarily containing the same data values as the required freeze frame. The request message includes a parameter identification (PID) value that indicates to the on-board system the specific information requested. PID specifications, scaling information, and display formats for the freeze frame are included in Appendix B.

The ECU(s) will respond to this message by transmitting the requested data value stored by the system. All data values returned for sensor readings will be actual stored readings, not default or substitute values used by the system because of a fault with that sensor.

Not all PIDs are applicable or supported by all systems. PID $00 is a bit-encoded PID that indicates, for each ECU, which PIDs that ECU supports. Therefore, PID $00 shall be supported by all ECUs that respond to a service $02 request as specified even if the ECU does not have a freeze frame stored at the time of the request.

Appendix A defines how to encode supported PIDs.

PID $02 indicates the DTC that caused the freeze frame data to be stored. If freeze frame data is not stored in the ECU, the system shall report $00 00 as the DTC. Any data reported when the stored DTC is $00 00 may not be valid.

The frame number byte will indicate $00 for the mandated freeze frame data. Manufacturers may optionally save additional freeze frames and use this service to obtain that data by specifying the freeze frame number in the request message. If a manufacturer uses these additional freeze frames, they will be stored under conditions specified by the manufacturer, and contain data specified by the manufacturer.

Downloaded from SAE International by Tara Casaletto, Monday, January 09, 2023

5.2.2 MESSAGE DATA BYTES

5.2.2.1 Request Powertrain Freeze Frame Data Request Message Definition (Read Supported PIDs)

TABLE 28—REQUEST POWERTRAIN FREEZE FRAME DATA REQUEST MESSAGE (READ SUPPORTED PIDS)

Data Byte	Parameter Name	Cvt	Hex Value	Mnemonic
#1	**Request powertrain freeze frame data request SID**	**M**	**02**	**SIDRQ**
#2	PID (see Appendix A)	M	xx	PID
#3	frame #	M	xx	FRNO

5.2.2.2 Request Powertrain Freeze Frame Data Response Message Definition (Report Supported PIDs)

TABLE 29—REQUEST POWERTRAIN FREEZE FRAME DATA RESPONSE MESSAGE (REPORT SUPPORTED PIDS)

Data Byte	Parameter Name	Cvt	Hex Value	Mnemonic
#1	**Request powertrain freeze frame data response SID**	**M**	**42**	**SIDPR**
#2	PID	M	xx	PID
#3	frame #	M	xx	FRNO
	data record of supported PIDs = [			DATAREC_
#4	Data A: supported PIDs,	M	xx	DATA_A
#5	Data B: supported PIDs,	M	xx	DATA_B
#6	Data C: supported PIDs,	M	xx	DATA_C
#7	Data D: supported PIDs]	M	xx	DATA_D

5.2.2.3 Request Powertrain Freeze Frame Data Request Message Definition (Read Freeze Frame PID Value)

TABLE 30—REQUEST POWERTRAIN FREEZE FRAME DATA REQUEST MESSAGE (READ FREEZE FRAME PID VALUE)

Data Byte	Parameter Name	Cvt	Hex Value	Mnemonic
#1	**Request current powertrain diagnostic data request SID**	**M**	**02**	**SIDRQ**
#2	PID (see Appendix B)	M/C	xx	PID
#3	frame #	M	xx	FRNO
C = Conditional — PID value shall be one of the supported PIDs of previous response message				

5.2.2.4 Request Powertrain Freeze Frame Data Response Message Definition (Report Freeze Frame PID Value)

TABLE 31—REQUEST POWERTRAIN FREEZE FRAME DATA RESPONSE MESSAGE DEFINITION (REPORT FREEZE FRAME PID VALUE)

Data Byte	Parameter Name	Cvt	Hex Value	Mnemonic
#1	**Request powertrain freeze frame data response SID**	**M**	**42**	**SIDPR**
#2	PID	M	xx	PID
#3	frame #	M	xx	FRNO
	data record = [			DATAREC_
#3	Data A,	M	xx	DATA_A
#4	Data B,	C	xx	DATA_B
#5	Data C,	C	xx	DATA_C
#6	Data D]	C	xx	DATA_D
C = Conditional — data B - D depend on selected PID value				

Downloaded from SAE International by Tara Casaletto, Monday, January 09, 2023

5.2.3 PARAMETER DEFINITION

5.2.3.1 PIDs Supported—"Appendix A" specifies the interpretation of the data record of supported PIDs.

5.2.3.2 PID and Data Byte Descriptions—"Appendix B" specifies standardized emission-related parameters.

5.2.3.3 Frame # Description—The frame number identifies the freeze frame, which includes emission-related data values in case an emission-related DTC is detected by the ECU.

5.2.4 MESSAGE EXAMPLE—The example below shows how the "Request powertrain freeze frame data" service shall be implemented.

5.2.4.1 Step #1: Request Supported Powertrain Freeze Frame PIDs from Vehicle—The external test equipment requests all supported powertrain freeze frame PIDs of freeze frame $00 from the vehicle. Refer to the example of service $01 how to request supported PIDs.

As a result of the supported PID request the external test equipment creates an internal list of supported PIDs for each ECU. ECU #1 (ECM) supports the following PIDs: $01 - $09, $0B - $0E. ECU #2 (TCM) does not support any PIDs for this service.

5.2.4.2 Step #2: Request PID $02 "DTC Which Caused Freeze Frame to be Stored" from Vehicle

Case #1: Freeze Frame Data are Stored in ECU #1:

Now the external test equipment requests PID $02 of freeze frame $00 from the vehicle. Since the ECU #2 (TCM) does not store a freeze frame data record only the ECU #1 (ECM) will send a response message.

In this example the freeze frame data are stored based on a DTC P0130 occurrence. The parameter value of PID $02 "DTC that caused required freeze frame data storage" is set to the DTC P0130.

TABLE 32—REQUEST POWERTRAIN FREEZE FRAME DATA REQUEST MESSAGE

Message direction:	External test equipment → All ECUs		
Message Type:	Request		
Data Byte	**Description (all values are in hexadecimal)**	**Byte Value (Hex)**	**Mnemonic**
#1	Request powertrain freeze frame data request SID	02	SIDRQ
#2	PID: DTC that caused required freeze frame data storage	02	PID
#3	Frame #	00	FRNO

TABLE 33—REQUEST POWERTRAIN FREEZE FRAME DATA RESPONSE MESSAGE

Message direction:	ECU #1 → External test equipment		
Message Type:	Response		
Data Byte	**Description (all values are in hexadecimal)**	**Byte Value (Hex)**	**Mnemonic**
#1	Request powertrain freeze frame data response SID	42	SIDPR
#2	PID: DTC that caused required freeze frame data storage	02	PID
#3	Frame #: 00	00	FRNO
#4	DTC High Byte of P0130	01	DATA_A
#5	DTC Low Byte of P0130	30	DATA_B

Downloaded from SAE International by Tara Casaletto, Monday, January 09, 2023

Case #2: No freeze frame data are stored in any ECU:

If no freeze frame data are stored then the ECU(s) which support this service but do not have any freeze frame stored shall send a response message with the parameter values of DATA_A and DATA_B of PID $02 "DTC that caused required freeze frame data storage" set to $0000.

TABLE 34—REQUEST POWERTRAIN FREEZE FRAME DATA REQUEST MESSAGE

Message direction:	External test equipment → All ECUs		
Message Type:	Request		
Data Byte	**Description (all values are in hexadecimal)**	**Byte Value (Hex)**	**Mnemonic**
#1	Request powertrain freeze frame data request SID	02	SIDRQ
#2	PID: DTC that caused required freeze frame data storage	02	PID
#3	Frame #: 00	00	FRNO

TABLE 35—REQUEST POWERTRAIN FREEZE FRAME DATA RESPONSE MESSAGE (SERVICE $02, PID $02, FRAME #$00)

Message direction:	ECU #1 → External test equipment		
Message Type:	Response		
Data Byte	**Description (all values are in hexadecimal)**	**Byte Value (Hex)**	**Mnemonic**
#1	Request powertrain freeze frame data response SID	42	SIDPR
#2	PID: DTC that caused required freeze frame data storage	02	PID
#3	Frame #: 00	00	FRNO
#4	DTC High Byte: zero value indicates, that no freeze frame is stored	00	DATA_A
#5	DTC Low Byte: zero value indicates, that no freeze frame is stored	00	DATA_B

NOTE—The DTC value reported is $00 00, therefore no valid freeze frame data are stored for supported PIDs.

5.3 Service $03 - Request Emission-Related Diagnostic Trouble Codes

5.3.1 FUNCTIONAL DESCRIPTION—The purpose of this service is to enable the external test equipment to obtain "confirmed" emission-related DTCs. This shall be a two step process for the external test equipment.

Step 1 - Send a service $01, PID $01 request to get the number of emission-related DTCs from all ECUs that have this available. Each ECU that has a DTC(s) stored will respond with a message that includes the number of stored codes to be reported. If an ECU is capable of storing emission-related DTCs does not have stored DTCs, then that ECU shall respond with a message indicating zero DTCs are stored.

Step 2 - Send a service $03 request for all emission-related DTCs. Each ECU that has DTCs will respond with one or more messages, each containing up to three (3) DTCs. If no emission-related DTCs are stored in the ECU, then the ECU may not respond to this request.

If additional DTCs are set between the time that the number of DTCs are reported by an ECU, and the DTCs are reported by an ECU, then the number of DTCs reported could exceed the number expected by the external test equipment. In this case, the external test equipment shall repeat this cycle until the number of DTCs reported equals the number expected based on the service $01, PID $01 response.

Downloaded from SAE International by Tara Casaletto, Monday, January 09, 2023

DTCs are transmitted in two (2) bytes of information for each DTC. The first two (2) bits (high order) of the first (1) byte for each DTC indicate whether the DTC is a Powertrain, Chassis, Body, or Network DTC (refer to SAE J2012 for additional interpretation of this structure). The second two (2) bits will indicate the first (1) digit of the DTC (0 through 3). The second (2) nibble of the first (1) byte and the entire second (2) byte are the next three (3) hexadecimal characters of the actual DTC reported hexadecimal. A Powertrain DTC transmitted as $0143 shall be displayed as P0143 (see figure below).

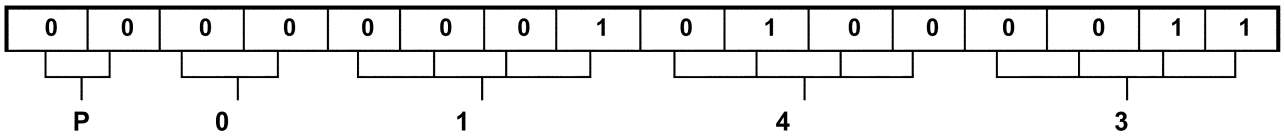

FIGURE 12—DIAGNOSTIC TROUBLE CODE ENCODING EXAMPLE DTC P0143

If less than three (3) DTCs are reported, the response message used to report DTCs shall have their unused bytes set to zero to maintain the required fixed message length for all messages. If there are no DTCs to report, a response message is allowed, but not required for SAE J1850 and ISO 9141-2 interfaces. For ISO 14230-4 interfaces, the ECU will respond with a report containing no DTCs (DTC#1, DTC#2, and DTC#3 shall be all set to $00).

5.3.2 MESSAGE DATA BYTES

5.3.2.1 Request Current Powertrain Diagnostic Data Request Message Definition (PID $01)

TABLE 36—REQUEST CURRENT POWERTRAIN DIAGNOSTIC DATA REQUEST MESSAGE (PID $01)

Data Byte	Parameter Name	Cvt	Hex Value	Mnemonic
#1	**Request current powertrain diagnostic data request SID**	**M**	**01**	**SIDRQ**
#2	PID {Number of emission-related DTCs and MIL status}	M	01	PID

5.3.2.2 Request Current Powertrain Diagnostic Data Response Message Definition (PID $01)

TABLE 37—REQUEST CURRENT POWERTRAIN DIAGNOSTIC DATA RESPONSE MESSAGE (PID $01)

Data Byte	Parameter Name	Cvt	Hex Value	Mnemonic
#1	**Request current powertrain diagnostic data response SID**	**M**	**41**	**SIDPR**
#2	PID {Number of emission-related DTCs and MIL status}	M	01	PID
	data record = [			DATAREC_
#3	Data A,	M	xx	DATA_A
#4	Data B,	M	xx	DATA_B
#5	Data C,	M	xx	DATA_C
#6	Data D]	M	xx	DATA_D

5.3.2.3 Request Emission-Related DTC Request Message Definition

TABLE 38—REQUEST EMISSION-RELATED DTC REQUEST MESSAGE

Data Byte	Parameter Name	Cvt	Hex Value	Mnemonic
#1	**Request emission-related DTC request SID**	**M**	**03**	**SIDRQ**

Downloaded from SAE International by Tara Casaletto, Monday, January 09, 2023

5.3.2.4 Request Emission-Related DTC Response Message Definition

TABLE 39—REQUEST EMISSION-RELATED DTC RESPONSE MESSAGE

Data Byte	Parameter Name	Cvt	Hex Value	Mnemonic
#1	**Request emission-related DTC response SID**	**M**	**43**	**SIDPR**
#2 #3	DTC#1 (High Byte) DTC#1 (Low Byte)	M/C M/C	xx xx	DTC1HI DTC1LO
#4 #5	DTC#2 (High Byte) DTC#2 (Low Byte)	M/C M/C	xx xx	DTC2HI DTC2LO
#6 #7	DTC#3 (High Byte) DTC#3 (Low Byte)	M/C M/C	xx xx	DTC3HI DTC3LO
C = Conditional — DTC#1, DTC#2, and DTC#3 are always present. If no valid DTC number is included the DTC values shall contain $00				

5.3.3 PARAMETER DEFINITION—This service does not support any parameters.

5.3.4 MESSAGE EXAMPLE—The example below shows how the "Request emission-related DTCs" service shall be implemented. The external test equipment requests emission-related DTCs from the vehicle. The vehicle supports the ISO 14230-4 protocol. The ECU#1 (ECM) has six (6) DTCs stored, the ECU #2 (TCM) has one (1) DTC stored, and the ECU #3 (ABS/Traction Control) has no DTC stored.

— ECU #1 (ECM): P0143, P0196, P0234, P02CD, P0357, P0A24
— ECU #2 (TCM): P0443
— ECU #3 (ABS/Traction Control): no DTC stored (response message is optional for ISO 9141-2 and SAE J1850)

The external test equipment requests the following PID from the vehicle:

— PID $01: Number of emission-related DTCs and MIL status, PID is supported by ECU #1 (ECM), ECU #2 (TCM), and ECU #3 (ABS/Traction Control)

TABLE 40—REQUEST CURRENT POWERTRAIN DIAGNOSTIC DATA REQUEST MESSAGE

Message direction:	**External test equipment → All ECUs**		
Message Type:	**Request**		
Data Byte	**Description (all values are in hexadecimal)**	**Byte Value (Hex)**	**Mnemonic**
#1	Request current powertrain diagnostic data request SID	01	SIDRQ
#2	PID: Number of emission-related DTCs and MIL status	01	PID

TABLE 41—REQUEST CURRENT POWERTRAIN DIAGNOSTIC DATA RESPONSE MESSAGE

Message direction:	**ECU#1 → External test equipment**		
Message Type:	**Response**		
Data Byte	**Description (all values are in hexadecimal)**	**Byte Value (Hex)**	**Mnemonic**
#1	Request current powertrain diagnostic data response SID	41	SIDPR
#2	PID: Number of emission-related DTCs and MIL status	01	PID
#3	MIL: ON; Number of emission-related DTCs: 06	86	DATA_A
#4	Misfire -, Fuel system -, Comprehensive monitoring	33	DATA_B
#5	Catalyst -, Heated catalyst -, …, monitoring supported	FF	DATA_C
#6	Catalyst -, Heated catalyst -, …, monitoring test complete/not complete	63	DATA_D

Downloaded from SAE International by Tara Casaletto, Monday, January 09, 2023

TABLE 42—REQUEST CURRENT POWERTRAIN DIAGNOSTIC DATA RESPONSE MESSAGE

Message direction:	ECU#2 → External test equipment		
Message Type:	Response		
Data Byte	**Description (all values are in hexadecimal)**	**Byte Value (Hex)**	**Mnemonic**
#1	Request current powertrain diagnostic data response SID	41	SIDPR
#2	PID: Number of emission-related DTCs and MIL status	01	PID
#3	MIL: OFF; Number of emission-related DTCs: 01	01	DATA_A
#4	Comprehensive monitoring: supported, test complete	44	DATA_B
#5	Catalyst -, Heated catalyst -, …, monitoring supported	00	DATA_C
#6	Catalyst -, Heated catalyst -, …, monitoring test complete/not complete	00	DATA_D

TABLE 43—REQUEST CURRENT POWERTRAIN DIAGNOSTIC DATA RESPONSE MESSAGE

Message direction:	ECU#3 → External test equipment		
Message Type:	Response		
Data Byte	**Description (all values are in hexadecimal)**	**Byte Value (Hex)**	**Mnemonic**
#1	Request current powertrain diagnostic data response SID	41	SIDPR
#2	PID: Number of emission-related DTCs and MIL status	01	PID
#3	MIL: OFF; Number of emission-related DTCs: 00	00	DATA_A
#4	Comprehensive monitoring: supported, test complete	00	DATA_B
#5	Catalyst -, Heated catalyst -, …, monitoring supported	00	DATA_C
#6	Catalyst -, Heated catalyst -, …, monitoring test complete/not complete	00	DATA_D

The external test equipment requests emission-related DTCs because ECU #1 has six (6) DTCs stored, ECU #2 has one (1) DTC stored, and ECU #3 has no (0) DTC stored.

TABLE 44—REQUEST EMISSION-RELATED DIAGNOSTIC TROUBLE CODES REQUEST MESSAGE

Message direction:	External test equipment → All ECUs		
Message Type:	Request		
Data Byte	**Description (all values are in hexadecimal)**	**Byte Value (Hex)**	**Mnemonic**
#1	Request emission-related DTC request SID	03	SIDRQ

TABLE 45—REQUEST EMISSION-RELATED DIAGNOSTIC TROUBLE CODES RESPONSE MESSAGE

Message direction:	ECU #1 → External test equipment		
Message Type:	Response		
Data Byte	**Description (all values are in hexadecimal)**	**Byte Value (Hex)**	**Mnemonic**
#1	Request emission-related DTC response SID	43	SIDPR
#2	DTC#1 High Byte of P0143	01	DTC1HI
#3	DTC#1 Low Byte of P0143	43	DTC1LO
#4	DTC#2 High Byte of P0196	01	DTC2HI
#5	DTC#2 Low Byte of P0196	96	DTC2LO
#6	DTC#3 High Byte of P0234	02	DTC3HI
#7	DTC#3 Low Byte of P0234	34	DTC3LO

Downloaded from SAE International by Tara Casaletto, Monday, January 09, 2023

TABLE 46—REQUEST EMISSION-RELATED DIAGNOSTIC TROUBLE CODES RESPONSE MESSAGE

Message direction:	ECU #2 → External test equipment		
Message Type:	Response		
Data Byte	**Description (all values are in hexadecimal)**	**Byte Value (Hex)**	**Mnemonic**
#1	Request emission-related DTC response SID	43	SIDPR
#2	DTC#1 High Byte of P0443	04	DTC1HI
#3	DTC#1 Low Byte of P0443	43	DTC1LO
#4	DTC#2 High Byte: 00	00	DTC2HI
#5	DTC#2 Low Byte: 00	00	DTC2LO
#6	DTC#3 High Byte: 00	00	DTC3HI
#7	DTC#3 Low Byte: 00	00	DTC3LO

TABLE 47—REQUEST EMISSION-RELATED DIAGNOSTIC TROUBLE CODES RESPONSE MESSAGE

Message direction:	ECU #1 → External test equipment		
Message Type:	Response		
Data Byte	**Description (all values are in hexadecimal)**	**Byte Value (Hex)**	**Mnemonic**
#1	Request emission-related DTC response SID	43	SIDPR
#2	DTC#1 High Byte of P02CD	02	DTC1HI
#3	DTC#1 Low Byte of P02CD	CD	DTC1LO
#4	DTC#2 High Byte of P0357	03	DTC2HI
#5	DTC#2 Low Byte of P0357	57	DTC2LO
#6	DTC#3 High Byte of P0A24	0A	DTC3HI
#7	DTC#3 Low Byte of P0A24	24	DTC3LO

TABLE 48—REQUEST EMISSION-RELATED DIAGNOSTIC TROUBLE CODES RESPONSE MESSAGE

Message direction:	ECU #3 → External test equipment		
Message Type:	Response		
Data Byte	**Description (all values are in hexadecimal)**	**Byte Value (Hex)**	**Mnemonic**
#1	Request emission-related DTC response SID	43	SIDPR
#2	DTC#1 High Byte: 00	00	DTC1HI
#3	DTC#1 Low Byte: 00	00	DTC1LO
#4	DTC#2 High Byte: 00	00	DTC2HI
#5	DTC#2 Low Byte: 00	00	DTC2LO
#6	DTC#3 High Byte: 00	00	DTC3HI
#7	DTC#3 Low Byte: 00	00	DTC3LO

NOTE— For ISO 9141-2 and SAE J1850 protocols the ECU #3 response message is optional because there is no DTC stored. If ISO 14230-4 protocol is supported by the vehicle, ECU #3 shall send a positive response message with no DTCs.

Downloaded from SAE International by Tara Casaletto, Monday, January 09, 2023

5.4 Service $04 - Clear/Reset Emission-Related Diagnostic Information

5.4.1 FUNCTIONAL DESCRIPTION—The purpose of this service is to provide a means for the external test equipment to command ECUs to clear all emission-related diagnostic information. This includes:

- Number of diagnostic trouble codes (can be read with Service $01, PID $01)
- Diagnostic trouble codes (can be read with Service $03)
- Trouble code for freeze frame data (can be read with Service $02, PID $02)
- Freeze frame data (can be read with Service $02)
- Oxygen sensor test data (can be read with Service $05)
- Status of system monitoring tests (can be read with Service $01, PID $01)
- On-board monitoring test results (can be read with Services $06 and $07)
- Distance travelled while MIL is activated (can be read with Service $01, PID $21)
- Number of warm-ups since DTC cleared (can be read with Service $01, PID $30)
- Distance since diagnostic trouble codes cleared (can be read with Service $01, PID $31)
- Minutes run by the engine while MIL activated (can be read with Service $01, PID $4D)
- Time since diagnostic trouble codes cleared (can be read with Service $01, PID $4E)

Other manufacturer specific “clearing/resetting” actions may also occur in response to this request message.

For safety and/or technical design reasons, some ECUs may not respond to this service under all conditions. All ECUs shall respond to this service request with the ignition ON and with the engine not running. ECUs that cannot perform this operation under other conditions, such as with the engine running, will ignore the request with SAE J1850 and ISO 9141-2 interfaces, or will send a negative response message with ISO 14230-4 interfaces, as described in ISO 14230-4.

5.4.2 MESSAGE DATA BYTES

5.4.2.1 Clear/Reset Emission-Related Diagnostic Information Request Message Definition

TABLE 49—CLEAR/RESET EMISSION-RELATED DIAGNOSTIC INFORMATION REQUEST MESSAGE

Data Byte	Parameter Name	Cvt	Hex Value	Mnemonic
#1	Clear/reset emission-related diagnostic information request SID	M	04	SIDRQ

5.4.2.2 Clear/Reset Emission-Related Diagnostic Information Response Message Definition

TABLE 50—CLEAR/RESET EMISSION-RELATED DIAGNOSTIC INFORMATION RESPONSE MESSAGE

Data Byte	Parameter Name	Cvt	Hex Value	Mnemonic
#1	Clear/reset emission-related diagnostic information response SID	M	44	SIDPR

5.4.3 PARAMETER DEFINITION—This service does not support any parameters.

5.4.4 MESSAGE EXAMPLE—This example is based on the example of service $03 as described in Section 5.3.4. The external test equipment commands the vehicle to Clear/reset emission-related diagnostic information with the engine running. The ECU #1 (ECM) and ECU #2 (TCM) will send a response message to confirm that all emission-related diagnostic information is cleared. For ISO 9141-2 and SAE J1850 protocols ECU #3 (ABS/Traction Control) will not send a response message because the conditions to perform the requested action are not met. For ISO 14230-4 protocol ECU #3 will send a negative response message with response code $22 - conditionsNotCorrect. In such case the external test equipment shall post a message with “Stop engine and turn ON ignition” and then repeat the service $04 command and check for response messages from all emission-related ECUs installed in the vehicle.

Downloaded from SAE International by Tara Casaletto, Monday, January 09, 2023

TABLE 51—CLEAR/RESET EMISSION-RELATED DIAGNOSTIC INFORMATION REQUEST MESSAGE

Message direction:	**External test equipment → All ECUs**		
Message Type:	**Request**		
Data Byte	**Description (all values are in hexadecimal)**	**Byte Value (Hex)**	**Mnemonic**
#1	Clear/reset emission-related diagnostic information request SID	04	SIDRQ

TABLE 52—CLEAR/RESET EMISSION-RELATED DIAGNOSTIC INFORMATION RESPONSE MESSAGE

Message direction:	**ECU#1 → External test equipment**		
Message Type:	**Response**		
Data Byte	**Description (all values are in hexadecimal)**	**Byte Value (Hex)**	**Mnemonic**
#1	Clear/reset emission-related diagnostic information response SID	44	SIDPR

TABLE 53—CLEAR/RESET EMISSION-RELATED DIAGNOSTIC INFORMATION RESPONSE MESSAGE

Message direction:	**ECU#2 → External test equipment**		
Message Type:	**Response**		
Data Byte	**Description (all values are in hexadecimal)**	**Byte Value (Hex)**	**Mnemonic**
#1	Clear/reset emission-related diagnostic information response SID	44	SIDPR

TABLE 54—NEGATIVE RESPONSE MESSAGE

Message direction:	**ECU#3 → External test equipment**		
Message Type:	**Response**		
Data Byte	**Description (all values are in hexadecimal)**	**Byte Value (Hex)**	**Mnemonic**
#1	Negative Response Service Identifier	7F	SIDNR
#2	Clear/reset emission-related diagnostic information request SID	04	SIDRQ
#3	Negative Response Code: conditionsNotCorrect	22	NR_CNC

NOTE— For ISO 14230-4 protocol the conditions of ECU#3 to Clear/reset emission-related diagnostic information are not met. Therefore ECU #3 sends a negative response message with response code “conditionsNotCorrect”. The external test equipment shall repeat the request after the conditions of the vehicle have changed by the user. Now, all ECUs shall send a positive response message to the external test equipment to confirm successful operation of the Clear/reset emission-related diagnostic information service.

Downloaded from SAE International by Tara Casaletto, Monday, January 09, 2023

5.5 Service $05 - Request Oxygen Sensor Monitoring Test Results

5.5.1 FUNCTIONAL DESCRIPTION—The purpose of this service is to allow access to the on-board oxygen sensor monitoring test results. The same information may be obtained by the use of service $06.

The request message for test results includes a Test ID value that indicates the information requested. Test value definitions, scaling information, and display formats are included in Appendix C.

Many methods may be used to calculate test results for this service by different manufacturers. If data values are to be reported using these messages that are different from those specified, ranges of test values have been assigned that can be used which have standard units of measure. The external test equipment can convert these values and display them in the standard units.

The ECU will respond to this message by transmitting the requested test data last determined by the system. The latest test results are to be retained, even over multiple ignition OFF cycles, until replaced by more recent test results. Test results are requested by Test ID.

Not all test values are applicable or supported by all vehicles. An optional feature of this service is for the ECU to indicate which Test IDs are supported. Test ID $00 is a bit-encoded value that indicates support for Test IDs from $01 to $20. Test ID $20 indicates support for Test IDs $21 through $40, etc. This is the same concept as used for PID support in services $01 and $02 as specified in Appendix A. If Test ID $00 is not supported, then the ECU does not use this feature to indicate Test ID support.

5.5.2 MESSAGE DATA BYTES

5.5.2.1 Request Oxygen Sensor Monitoring Test Results Request Message Definition (Read Supported TIDs)

TABLE 55—REQUEST OXYGEN SENSOR MONITORING TEST RESULTS REQUEST MESSAGE (READ SUPPORTED TIDS)

Data Byte	Parameter Name	Cvt	Hex Value	Mnemonic
#1	**Request oxygen sensor monitoring test results request SID**	**M**	**05**	**SIDRQ**
#2	Test ID (see Appendix A)	M	xx	TID
#3	O2 Sensor #	M	xx	O2SNO

5.5.2.2 Request Oxygen Sensor Monitoring Test Results Response Message Definition (Report Supported TIDs)

TABLE 56—REQUEST OXYGEN SENSOR MONITORING TEST RESULTS RESPONSE MESSAGE (REPORT SUPPORTED TIDS)

Data Byte	Parameter Name	Cvt	Hex Value	Mnemonic
#1	**Request oxygen sensor monitoring test results response SID**	**M**	**45**	**SIDPR**
#2	Test ID	M	xx	TID
#3	O2 Sensor #	M	xx	O2SNO
#4	data record of supported Test IDs = [Data A: supported Test IDs,	M	xx	DATA_A
#5	Data B: supported Test IDs,	M	xx	DATA_B
#6	Data C: supported Test IDs,	M	xx	DATA_C
#7	Data D: supported Test IDs]	M	xx	DATA_D

Downloaded from SAE International by Tara Casaletto, Monday, January 09, 2023

5.5.2.3 Request Oxygen Sensor Monitoring Test Results Request Message Definition (Read TID Values)

TABLE 57—REQUEST OXYGEN SENSOR MONITORING TEST RESULTS REQUEST MESSAGE (READ TID VALUES)

Data Byte	Parameter Name	Cvt	Hex Value	Mnemonic
#1	**Request oxygen sensor monitoring test results request SID**	**M**	**05**	**SIDRQ**
#2	Test ID	M	xx	TID
#3	O2 Sensor #	M	xx	O2SNO

5.5.2.4 Request Oxygen Sensor Monitoring Test Results Response Message Definition (Report TID Values)

TABLE 58—REQUEST OXYGEN SENSOR MONITORING TEST RESULTS RESPONSE MESSAGE (REPORT TID VALUES)

Data Byte	Parameter Name	Cvt	Hex Value	Mnemonic
#1	**Request oxygen sensor monitoring test results response SID**	**M**	**45**	**SIDPR**
#2	TEST ID	M	xx	TID
#3	O2 Sensor #	M	xx	O2SNO
#4	data record of Test ID = [Test Value	M	xx	TESTVAL
#5	Minimum Limit	C	xx	MINLIMIT
#6	Maximum Limit]	C	xx	MAXLIMIT
C = Conditional — if the supported Test ID is a constant ($01 - $04) the parameters Minimum and Maximum Limit shall not be included				

5.5.3 PARAMETER DEFINITION

5.5.3.1 Test IDs Supported—The Test IDs supported is the same concept as used for PID support in services $01 and $02 as specified in Appendix A.

5.5.3.2 Test ID and Data Byte Descriptions—"Appendix C" specifies standardised and vehicle manufacturer specific Test ID ranges.

5.5.3.3 Oxygen Sensor Location Definition—The Oxygen sensor location value used in the request message shall indicate the Oxygen Sensor location as defined by PID $13 or $1D as specified in Appendix B.

TABLE 59—OXYGEN SENSOR LOCATION DESCRIPTION

Oxygen sensor location (one, and only one bit can be set to a 1)		
Bit	**Sensor location1)**	**Alternative sensor location2)**
0	Bank 1 - Sensor 1	Bank 1 - Sensor 1
1	Bank 1 - Sensor 2	Bank 1 - Sensor 2
2	Bank 1 - Sensor 3	Bank 2 - Sensor 1
3	Bank 1 - Sensor 4	Bank 2 - Sensor 2
4	Bank 2 - Sensor 1	Bank 3 - Sensor 1
5	Bank 2 - Sensor 2	Bank 3 - Sensor 2
6	Bank 2 - Sensor 3	Bank 4 - Sensor 1
7	Bank 2 - Sensor 4	Bank 4 - Sensor 2
1) If Service $01 PID $13 supported. 2) If Service $01 PID $1D supported.		

Downloaded from SAE International by Tara Casaletto, Monday, January 09, 2023

5.5.3.4 Test Result Description—The following table defines the test result.

TABLE 60—TEST RESULT DESCRIPTION

Hex	# of bytes	Description
00 - FF	1	The Test Result parameter includes either a constant or a calculated value depending on the Test ID.

5.5.3.5 Minimum and Maximum Test Limit Description—The following table defines Minimum and Maximum Test Limit.

TABLE 61—MINIMUM AND MAXIMUM TEST LIMIT DESCRIPTION

Test Limit	# of bytes	Description
Minimum	1	The minimum test limit (only for calculated test result) is the minimum value to which the test result is compared. The Test Limit value is either a minimum or a maximum value to which the test results are compared. The Test Limit is a one byte unsigned numeric value (0 - 255).
Maximum	1	The maximum test limit (only for calculated test result) is the maximum value to which the test result is compared.

Results of latest mandated on-board oxygen sensor monitoring test, see figure below.

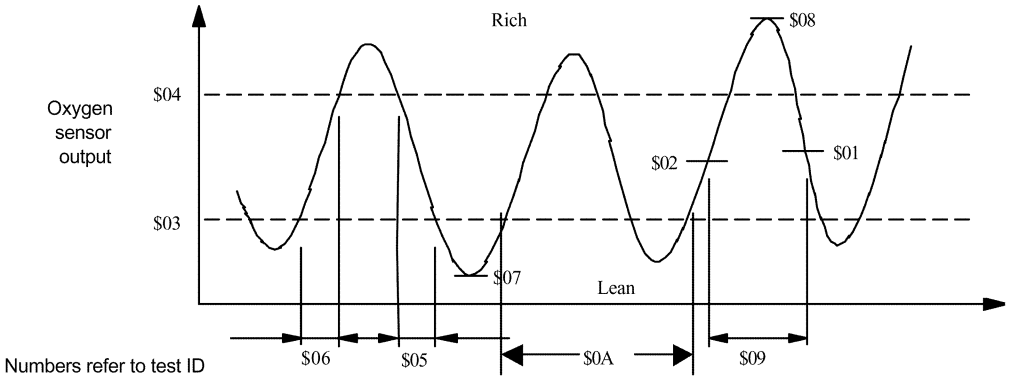

FIGURE 13—TEST ID VALUE EXAMPLE

5.5.4 MESSAGE EXAMPLE—The example below shows how the "Request oxygen sensor monitoring test results" service shall be implemented.

5.5.4.1 Step #1: Request Oxygen Sensor Monitoring Test Results (Request for Supported Test IDs) from Vehicle—The external test equipment requests all supported Test IDs from the vehicle. Refer to the example of service $01 how to request supported PIDs (same concept is used for supported TIDs). PID $13 is supported by ECU #1. This is important information for the external test equipment in order to identify the correct O2 Sensor location.

As a result of the supported TID request the external test equipment creates an internal list of supported TIDs for each ECU: The ECU #1 (ECM) supports Test IDs $01 - $06, $70, $71 and $81. The ECU #2 (TCM) does not support any Test IDs.

Downloaded from SAE International by Tara Casaletto, Monday, January 09, 2023

5.5.4.2 *Step #2: Request Oxygen Sensor Monitoring Test Fesults from Vehicle*—The external test equipment sends two (2) "Request oxygen sensor monitoring test results" request messages to the vehicle. The two (2) request messages include the following Test IDs:

— 1st request message: Test IDs $01
— 2nd request message: Test IDs $05

NOTE— In general, the external test equipment should read the test status of service $01 PID $01 prior to execute service $05 with Test ID $01 and $05 to verify, whether the tests are supported and completed. The test values reported may be invalid if the test is not completed.

TABLE 62—REQUEST OXYGEN SENSOR MONITORING TEST RESULTS REQUEST MESSAGE

Message direction:	**External test equipment → All ECUs**		
Message Type:	**Request**		
Data Byte	**Description (all values are in hexadecimal)**	**Byte Value (Hex)**	**Mnemonic**
#1	Request oxygen sensor monitoring test results request SID	05	SIDRQ
#2	TID: Rich to lean sensor threshold voltage (constant)	01	TID
#3	O2 Sensor #: Bank 1 - Sensor 1	01	O2SNO

TABLE 63—REQUEST OXYGEN SENSOR MONITORING TEST RESULTS RESPONSE MESSAGE

Message direction:	**ECU#1 → External test equipment**		
Message Type:	**Response**		
Data Byte	**Description (all values are in hexadecimal)**	**Byte Value (Hex)**	**Mnemonic**
#1	Request oxygen sensor monitoring test results response SID	45	SIDPR
#2	TID: Rich to lean sensor threshold voltage (constant)	01	TID
#3	O2 Sensor #: Bank 1 - Sensor 1	01	O2SNO
#4	Test Limit: 450 mV	5A	TESTVAL

NOTE— ECU#2 does not support any Test IDs and therefore does not send a response message.

TABLE 64—REQUEST OXYGEN SENSOR MONITORING TEST RESULTS REQUEST MESSAGE

Message direction:	**External test equipment → All ECUs**		
Message Type:	**Request**		
Data Byte	**Description (all values are in hexadecimal)**	**Byte Value (Hex)**	**Mnemonic**
#1	Request oxygen sensor monitoring test results request SID	05	SIDRQ
#2	TID: Rich to lean sensor switch time (calculated)	05	TID
#3	O2 Sensor #: Bank 1 - Sensor 1	01	O2SNO

Downloaded from SAE International by Tara Casaletto, Monday, January 09, 2023

TABLE 65—REQUEST OXYGEN SENSOR MONITORING TEST RESULTS RESPONSE MESSAGE

Message direction:	ECU#1 → External test equipment		
Message Type:	Response		
Data Byte	**Description (all values are in hexadecimal)**	**Byte Value (Hex)**	**Mnemonic**
#1	Request oxygen sensor monitoring test results response SID	45	SIDPR
#2	TID: Rich to lean sensor switch time (calculated)	05	TID
#3	O2 Sensor #: Bank 1 - Sensor 1	01	O2SNO
#4	Test Limit: 72 ms (milliseconds)	12	TESTVAL
#5	Minimum Limit: 0 ms	00	MINLIMIT
#6	Maximum Limit: 100 ms	19	MAXLIMIT

5.6 Service $06 - Request On-Board Monitoring Test Results for Specific Monitored Systems

5.6.1 FUNCTIONAL DESCRIPTION—The purpose of this service is to allow access to the results for on-board diagnostic monitoring tests of specific components/systems that are not continuously monitored. Examples are catalyst monitoring and the evaporative system monitoring.

The vehicle manufacturer is responsible for assigning Test IDs and Component IDs for tests of different systems and components. The latest test results are to be retained, even over multiple ignition OFF cycles, until replaced by more recent test results. Test results are requested by Test ID. Test results are reported only for supported combinations of test limit type and component ID, and are reported as positive (unsigned) values. Only one test limit is included in a response message, but that limit could be either a minimum or a maximum limit. If both a minimum and maximum test limit are to be reported, then two (2) response messages will be transmitted, in any order. The most significant bit of the “test limit type / component ID” byte will be used to indicate the test limit type.

An optional feature of this service is for the ECU to indicate which Test IDs are supported. Test ID $00 is a bit-encoded value that indicates support for Test IDs from $01 to $20. Test ID $20 indicates support for Test IDs $21 through $40, etc. This is the same concept as used for PID support in services $01 and $02 as specified in Appendix A. If Test ID $00 is not supported, then the ECU does not use this feature to indicate Test ID support.

This service can be used as an alternative to service $05 to report oxygen sensor test results.

5.6.2 MESSAGE DATA BYTES

5.6.2.1 Request On-Board Monitoring Test Results for Specific Monitored Systems Request Message Definition (Read Supported TIDs)

TABLE 66—REQUEST ON-BOARD MONITORING TEST RESULTS FOR SPECIFIC MONITORED SYSTEMS REQUEST MESSAGE (READ SUPPORTED TIDS)

Data Byte	Parameter Name	Cvt	Hex Value	Mnemonic
#1	Request on-board monitoring test results for specific monitored systems request SID	M	06	SIDRQ
#2	Test ID (see Appendix A)	M	xx	TID

Downloaded from SAE International by Tara Casaletto, Monday, January 09, 2023

5.6.2.2 Request On-Board Monitoring Test Results for Specific Monitored Systems Response Message Definition (Report Supported TIDs)

TABLE 67—REQUEST ON-BOARD MONITORING TEST RESULTS FOR SPECIFIC MONITORED SYSTEMS RESPONSE MESSAGE (REPORT SUPPORTED TIDS)

Data Byte	Parameter Name	Cvt	Hex Value	Mnemonic
#1	Request on-board monitoring test results for specific monitored systems response SID	M	46	SIDPR
#2	Test ID	M	xx	TID
#3	FillerByte	M	FF	FB
	data record of supported Test IDs = [			DATAREC_
#4	Data A: supported Test IDs,	M	xx	DATA_A
#5	Data B: supported Test IDs,	M	xx	DATA_B
#6	Data C: supported Test IDs,	M	xx	DATA_C
#7	Data D: supported Test IDs]	M	xx	DATA_D

5.6.2.3 Request On-Board Monitoring Test Results for Specific Monitored Systems Request Message Definition (Read Test Results)

TABLE 68—REQUEST ON-BOARD MONITORING TEST RESULTS FOR SPECIFIC MONITORED SYSTEMS REQUEST MESSAGE (READ TEST RESULTS)

Data Byte	Parameter Name	Cvt	Hex Value	Mnemonic
#1	Request on-board monitoring test results for specific monitored systems request SID	M	06	SIDRQ
#2	Test ID (request test results)	M	xx	TID

5.6.2.4 Request On-Board Monitoring Test Results for Specific Monitored Systems Response Message Definition (Report Test Results)

TABLE 69—REQUEST ON-BOARD MONITORING TEST RESULTS FOR SPECIFIC MONITORED SYSTEMS RESPONSE MESSAGE (REPORT TEST RESULTS)

Data Byte	Parameter Name	Cvt	Hex Value	Mnemonic
#1	Request on-board monitoring test results for specific monitored systems response SID	M	46	SIDPR
#2	Test ID (report test results)	M	xx	TID
#3	Test Limit Type & Component ID	M	xx	TLTCID
	data record of Test ID = [			TIDREC_
#4	Test Value (High Byte)	M	xx	TVHI
#5	Test Value (Low Byte)	M	xx	TVLO
#6	Test Limit (High Byte)	C	xx	TLHI
#7	Test Limit (Low Byte)]	C	xx	TLLO
C = Conditional — if Test Limit is either a Minimum or a Maximum Limit depends on the parameter Test Limit Type & Component ID value (bit 7)				

5.6.3 PARAMETER DEFINITION

5.6.3.1 Test IDs Supported—The Test IDs supported is the same concept as used for PID support in services $01 and $02 as specified in Appendix A.

5.6.3.2 Test ID and Data Byte Descriptions—"Appendix C" specifies standardised and vehicle manufacturer specific Test ID ranges, which are permitted to be supported in this service.

Downloaded from SAE International by Tara Casaletto, Monday, January 09, 2023

5.6.3.3 *Test Limit Type and Component ID Description*—The Test Limit Type and Component ID is a one (1) byte parameter and is defined in the table below.

TABLE 70—TEST LIMIT TYPE AND COMPONENT ID DESCRIPTION

Parameter name	bit	Description
Component ID	0 - 6	Component ID - manufacturer specified - necessary when multiple components or systems are present on the vehicle and have the same definition of Test ID. If the same test is performed on more than one component, multiple test results shall be reported for that Test ID. For example, a test for bank 1 catalyst can be the same as a test for a bank 2 catalyst, or a test for a pre-catalyst oxygen sensor can be the same as a test for a post-catalyst oxygen sensor. In either case, a request for a single Test ID would result in two test results being reported with different Component IDs.
Test Limit Type	7	Most significant bit indicates type of test limit, where: 0 - test limit is maximum value - test fails if test value is greater than this value. 1 - test limit is minimum value - test fails if test value is less than this value.

5.6.3.4 *Test Result Description*—The Test Result represents the test result and is defined in the table below.

TABLE 71—TEST RESULT DESCRIPTION

Parameter name	# of bytes	Description
Test Result	2 (High and Low Byte)	Test result - this value shall be less than or equal to the test limit if most significant bit of Test Limit Type and Component ID byte is '0', and shall be greater than or equal to the test limit if most significant bit of Test Limit Type and Component ID byte is '1'. The Test Value is a two byte unsigned numeric value (0 - 65535).

5.6.3.5 *Test Limit description*—The Test Limit is defined in the table below.

TABLE 72—TEST LIMIT DESCRIPTION

Parameter name	# of bytes	Description
Test Limit	2 (High and Low Byte)	The Test Limit value is either a minimum or a maximum value to which the test results are compared. The Test Limit is a two byte unsigned numeric value (0 - 65535).

5.6.4 MESSAGE EXAMPLE—The example below shows how the “Request on-board monitoring test results for specific monitored systems” service shall be implemented.

5.6.4.1 *Step #1: Request On-Board Monitoring Test Results for Specific Monitored Systems (Request for Supported Test IDs)*—The external test equipment requests all supported Test IDs from the vehicle. Refer to the example of service $01 how to request supported PIDs (same concept is used for supported TIDs).

As a result of the supported TID request the external test equipment creates an internal list of supported TIDs for each ECU: The ECU #1 (ECM) supports Test ID $02. The ECU #2 (TCM) does not support any Test IDs.

5.6.4.2 *Step #2: Request On-Board Monitoring Test Results for Specific Monitored Systems*—The external test equipment sends a “Request on-board monitoring test results for specific monitored systems” request message with one (1) supported Test ID to the vehicle. The response messages indicate which Component IDs are supported. The request message includes the following Test ID:

— Test ID $02 - Lean to rich sensor threshold voltage (constant), (supported Component IDs: $04, $16)

NOTE— In general, the external test equipment should read the test status of service $01 PID $01 prior to execute service $06 with Test ID $01 and $06 to verify, whether the tests are supported and completed. The test values reported may be invalid if the test is not completed.

Downloaded from SAE International by Tara Casaletto, Monday, January 09, 2023

TABLE 73—REQUEST ON-BOARD MONITORING TEST RESULTS FOR SPECIFIC MONITORED SYSTEMS REQUEST MESSAGE

Message direction:	**External test equipment → All ECUs**		
Message Type:	**Request**		
Data Byte	**Description (all values are in hexadecimal)**	**Byte Value (Hex)**	**Mnemonic**
#1	Request on-board monitoring test results for specific monitored systems request SID	06	SIDRQ
#2	TID Lean to rich sensor threshold voltage (constant)	02	TID

TABLE 74—REQUEST ON-BOARD MONITORING TEST RESULTS FOR SPECIFIC MONITORED SYSTEMS RESPONSE MESSAGE

Message direction:	**ECU#1 → External test equipment**		
Message Type:	**Response**		
Data Byte	**Description (all values are in hexadecimal)**	**Byte Value (Hex)**	**Mnemonic**
#1	Request on-board monitoring test results for specific monitored systems response SID	46	SIDPR
#2	TID Lean to rich sensor threshold voltage (constant)	02	TID
#3	Test Limit Type: test limit is minimum value; Component ID: 04	84	TLTCID
#4	Test Value High Byte: test fails if test value is less than test limit	00	TVHI
#5	Test Value Low Byte: test fails if test value is less than test limit	10	TVLO
#6	Minimum Test Limit High Byte	00	TLHI
#7	Minimum Test Limit Low Byte	00	TLLO

NOTE— ECU#2 does not support any Test IDs and therefore does not send a response message.

TABLE 75—REQUEST ON-BOARD MONITORING TEST RESULTS FOR SPECIFIC MONITORED SYSTEMS RESPONSE MESSAGE

Message direction:	**ECU#1 → External test equipment**		
Message Type:	**Response**		
Data Byte	**Description (all values are in hexadecimal)**	**Byte Value (Hex)**	**Mnemonic**
#1	Request on-board monitoring test results for specific monitored systems response SID	46	SIDPR
#2	TID Lean to rich sensor threshold voltage (constant)	02	TID
#3	Test Limit Type: test limit is maximum value; Component ID: 16	16	TLTCID
#4	Test Value High Byte: test fails if test value is greater than test limit	00	TVHI
#5	Test Value Low Byte: test fails if test value is greater than test limit	32	TVLO
#6	Maximum Test Limit High Byte	00	TLHI
#7	Maximum Test Limit Low Byte	20	TLLO

NOTE— The above example shows that the test in ECU #1 for Test ID 02 and Component ID 04 passed and that the test in ECU #1 for Test ID 02 and Component ID 16 failed.

Downloaded from SAE International by Tara Casaletto, Monday, January 09, 2023

5.7 Service $07 - Request Emission-Related Diagnostic Trouble Codes Detected During Current or Last Completed Driving Cycle

5.7.1 FUNCTIONAL DESCRIPTION—The purpose of this service is to enable the external test equipment to obtain "pending" diagnostic trouble codes detected during current or last completed driving cycle for emission-related components / systems that are tested or continuously monitored during normal driving conditions. Service $07 is required for all DTCs and is independent of Service $03. The intended use of this data is to assist the service technician after a vehicle repair, and after clearing diagnostic information, by reporting test results after a single driving cycle. If the test failed during the driving cycle, the DTC associated with that test will be reported. Test results reported by this service do not necessarily indicate a faulty component / system. If test results indicate a failure after additional driving, then the MIL will be illuminated and a DTC will be set and reported with service $03, indicating a faulty component / system. This service can always be used to request the results of the latest test, independent of the setting of a DTC.

Test results for these components/systems are reported in the same format as the DTCs in service $03 - refer to the functional description for service $03.

If less than three (3) DTC values are reported for failed tests, the response messages used to report the test results shall be filled with $00 to fill seven (7) data bytes. This maintains the required fixed message length for all messages.

If there are no test failures to report, responses are permitted but not required for SAE J1850 and ISO 9141-2 interfaces. For ISO 14230-4 interfaces, the ECU will respond with a report containing no codes (all DTC values shall contain $00).

5.7.2 MESSAGE DATA BYTES

5.7.2.1 Request Emission-Related Diagnostic Trouble Codes Detected during Current or Last Completed Driving Cycle Request Message Definition

TABLE 76—REQUEST EMISSION-RELATED DIAGNOSTIC TROUBLE CODES DETECTED DURING CURRENT OR LAST COMPLETED DRIVING CYCLE REQUEST MESSAGE

Data Byte	Parameter Name	Cvt	Hex Value	Mnemonic
#1	**Request emission-related diagnostic trouble codes detected during current or last completed driving cycle request SID**	**M**	**07**	**SIDRQ**

5.7.2.2 Request Emission-Related Diagnostic Trouble Codes Detected During Current or Last Completed Driving Cycle Response Message Definition

TABLE 77—REQUEST EMISSION-RELATED DIAGNOSTIC TROUBLE CODES DETECTED DURING CURRENT OR LAST COMPLETED DRIVING CYCLE RESPONSE MESSAGE

Data Byte	Parameter Name	Cvt	Hex Value	Mnemonic
#1	**Request emission-related diagnostic trouble codes detected during current or last completed driving cycle response SID**	**M**	**47**	**SIDPR**
#2	DTC#1 (High Byte)	M/C	xx	DTC1HI
#3	DTC#1 (Low Byte)	M/C	xx	DTC1LO
#4	DTC#2 (High Byte)	M/C	xx	DTC2HI
#5	DTC#2 (Low Byte)	M/C	xx	DTC2LO
#6	DTC#3 (High Byte)	M/C	xx	DTC3HI
#7	DTC#3 (Low Byte)	M/C	xx	DTC3LO
C = Conditional — DTC#1, DTC#2, and DTC#3 are always present. If no valid DTC number is included the DTC values shall contain $00				

Downloaded from SAE International by Tara Casaletto, Monday, January 09, 2023

5.7.3 PARAMETER DEFINITION—This service does not support any parameters.

5.7.4 MESSAGE EXAMPLE—Refer to message example of service $03.

5.8 Service $08 - Request Control of On-Board System, Test or Component

5.8.1 FUNCTIONAL DESCRIPTION—The purpose of this service is to enable the external test equipment to control the operation of an on-board system, test or component.

The data bytes will be specified, if necessary, for each Test ID in Appendix F, and will be unique for each Test ID. If any data bytes are unused for any test, they shall be filled with $00 to maintain a fixed message length.

Possible uses for these data bytes in the request message are:

— Turn on-board system/test/component ON
— Turn on-board system/test/component OFF
— Cycle on-board system/test/component for ‘n’ seconds.

Possible uses for these data bytes in the response message are:

— Report system status
— Report test results

An optional feature of this service is for the ECU to indicate which Test IDs are supported. Test ID $00 is a bit-encoded value that indicates support for Test IDs from $01 to $20. Test ID $20 indicates support for Test IDs $21 through $40, etc. This is the same concept as used for PID support in services $01 and $02 as specified in Appendix A. If Test ID $00 is not supported, then the ECU does not use this feature to indicate Test ID support.

5.8.2 MESSAGE DATA BYTES

5.8.2.1 Request Control of On-Board Device Request Message Definition (read supported TIDs)

TABLE 78—REQUEST CONTROL OF ON-BOARD DEVICE REQUEST MESSAGE (READ SUPPORTED TIDS)

Data Byte	Parameter Name	Cvt	Hex Value	Mnemonic
#1	**Request control of on-board device request SID**	**M**	**08**	**SIDRQ**
#2	Test ID (see Appendix A)	M	xx	TID
	data record of Test ID = [			TIDREC_
#3	Data A,	M	00	DATA_A
#4	Data B,	M	00	DATA_B
#5	Data C,	M	00	DATA_C
#6	Data D,	M	00	DATA_D
#7	Data E]	M	00	DATA_E

Downloaded from SAE International by Tara Casaletto, Monday, January 09, 2023

5.8.2.2 Request Control of On-Board Device Response Message Definition (Report Supported TIDs)

TABLE 79—REQUEST CONTROL OF ON-BOARD DEVICE RESPONSE MESSAGE (REPORT SUPPORTED TIDS)

Data Byte	Parameter Name	Cvt	Hex Value	Mnemonic
#1	**Request control of on-board device response SID**	**M**	**48**	**SIDPR**
#2	Test ID	M	xx	TID
#3	FillerByte	M	00	FB
	data record of supported Test IDs = [			TIDREC_
#4	Data A: supported Test IDs,	M	xx	DATA_A
#5	Data B: supported Test IDs,	M	xx	DATA_B
#6	Data C: supported Test IDs,	M	xx	DATA_C
#7	Data D: supported Test IDs]	M	xx	DATA_D

5.8.2.3 Request Control of On-Board Device Request Message Definition (read TID values)

TABLE 80—REQUEST CONTROL OF ON-BOARD DEVICE REQUEST MESSAGE (READ TID VALUES)

Data Byte	Parameter Name	Cvt	Hex Value	Mnemonic
#1	**Request control of on-board device request SID**	**M**	**08**	**SIDRQ**
#2	Test ID (request Test ID values)	M	xx	TID
	data record of Test ID = [			TIDREC_
#3	Data A,	M/C	xx	DATA_A
#4	Data B,	M/C	xx	DATA_B
#5	Data C,	M/C	xx	DATA_C
#6	Data D,	M/C	xx	DATA_D
#7	Data E]	M/C	xx	DATA_E
C = Conditional — Data A - E shall be filled with $00 if unused				

5.8.2.4 Request Control of On-Board Device Response Message Definition (report TID values)

TABLE 81—REQUEST CONTROL OF ON-BOARD DEVICE RESPONSE MESSAGE (REPORT TID VALUES)

Data Byte	Parameter Name	Cvt	Hex Value	Mnemonic
#1	**Request control of on-board device response SID**	**M**	**48**	**SIDPR**
#2	Test ID (report Test ID values)	M	xx	TID
	data record of Test ID = [			TIDREC_
#3	Data A,	M/C	xx	DATA_A
#4	Data B,	M/C	xx	DATA_B
#5	Data C,	M/C	xx	DATA_C
#6	Data D,	M/C	xx	DATA_D
#7	Data E]	M/C	xx	DATA_E
C = Conditional — Data A - E shall be filled with $00 if unused				

Downloaded from SAE International by Tara Casaletto, Monday, January 09, 2023

5.8.3 PARAMETER DEFINITION

5.8.3.1 Test IDs Supported—Refer to Appendix A.

5.8.3.2 Test ID and Data Byte Descriptions—Refer to Appendix F.

5.8.4 MESSAGE EXAMPLE—The example below shows how "Request control of on-board system, test or component" service shall be implemented.

5.8.4.1 Step #1: Request Control of On-Board System, Test or Component (Request for Supported Test IDs)—The external test equipment requests all supported Test IDs from the vehicle. Refer to the example of service $01 how to request supported PIDs (same concept is used for supported TIDs).

As a result of the supported TID request the external test equipment creates an internal list of supported PIDs for each ECU: The ECU #1 (ECM) supports Test ID $01. The ECU #2 (TCM) does not support any Test IDs and therefore does not send a response message.

5.8.4.2 Step #2: Request Control of On-Board Device (Service $08, Test ID $01)—The external test equipment sends a "Request control of on-board device" message with one (1) supported Test ID $01 to the vehicle.

TABLE 82—REQUEST CONTROL OF ON-BOARD DEVICE REQUEST MESSAGE

Message direction:	**External test equipment → All ECUs**		
Message Type:	**Request**		
Data Byte	**Description (all values are in hexadecimal)**	**Byte Value (Hex)**	**Mnemonic**
#1	Request control of on-board device request SID	08	SIDRQ
#2	TID: Evaporative system leak test	01	TID
#3	Data A: 00	00	DATA_A
#4	Data B: 00	00	DATA_B
#5	Data C: 00	00	DATA_C
#6	Data D: 00	00	DATA_D
#7	Data E: 00	00	DATA_E

TABLE 83—REQUEST CONTROL OF ON-BOARD DEVICE RESPONSE MESSAGE

Message direction:	**ECU#1 → External test equipment**		
Message Type:	**Response**		
Data Byte	**Description (all values are in hexadecimal)**	**Byte Value (Hex)**	**Mnemonic**
#1	Request control of on-board device response SID	48	SIDPR
#2	TID: Evaporative system leak test	01	TID
#3	Data A: 00	00	DATA_A
#4	Data B: 00	00	DATA_B
#5	Data C: 00	00	DATA_C
#6	Data D: 00	00	DATA_D
#7	Data E: 00	00	DATA_E

NOTE— ECU#2 does not support the Test ID and therefore does not send a response message.

Downloaded from SAE International by Tara Casaletto, Monday, January 09, 2023

5.9 Service $09 - Request Vehicle Information

5.9.1 FUNCTIONAL DESCRIPTION—The purpose of this service is to enable the external test equipment to request vehicle specific vehicle information such as Vehicle Identification Number (VIN) and Calibration IDs. Some of this information may be required by regulations and some may be desirable to be reported in a standard format if supported by the vehicle manufacturer. INFOTYPEs are defined in Appendix G.

An optional feature of this service is for the ECU to indicate which INFOTYPEs are supported (support of INFOTYPE $00 is required for ISO 9141-2). INFOTYPE $00 is a bit-encoded value that indicates support for INFOTYPEs from $01 to $20. INFOTYPE $20 indicates support for INFOTYPEs $21 through $40, etc. This is the same concept as used for PID support in services $01 and $02 as specified in Appendix A. If PID (Parameter ID)/TID (Test ID)/INFOTYPE $00 is not supported, then the ECU does not use this feature to indicate PID (Parameter ID)/TID (Test ID)/INFOTYPE support.

For request messages with INFOTYPEs not equal to $00 the positive response messages may not be sent by the ECU(s) within in the P2max timing window as specified in Section 4.1.2. The external test equipment shall maintain a list of ECUs, which support the INFOTYPEs not equal to $00 in order to justify, whether it shall expect a response message from this ECU or not. This applies to the following protocols:

a. ISO 9141-2: If the positive response message is not received within $P2_{K\text{-}Line}$, the external test equipment shall stop retrying the request message after one (1) minute from the original request. The retry message shall be sent at least every four (4) seconds. The retry message keeps the bus alive and prevents the external test equipment from having to re-initialise the bus ($P3_{K\text{-}Line}$ time out). The ECU shall not re-initialise the service $09 internal routine. Refer to Section 4.1.4.3.1.
b. SAE J1850: If the response message is not received within thirty (30) seconds, the external test equipment shall re-send (retry) the request message. The ECU shall not re-initiate the service $09 internal routine, but send the positive response message if not already sent. In order to achieve a maximum time out of one (1) minute the external test equipment shall perform no more than one (1) retry. Refer to Section 4.1.4.3.3.

5.9.2 MESSAGE DATA BYTES

5.9.2.1 Request Vehicle Information Request Message Definition (Read Supported InfoType)

TABLE 84—REQUEST VEHICLE INFORMATION REQUEST MESSAGE (READ SUPPORTED INFOTYPE)

Data Byte	Parameter Name	Cvt	Hex Value	Mnemonic
#1	**Request vehicle information request SID**	**M**	**09**	**SIDRQ**
#2	InfoType (see Appendix A)	M	xx	INFTYP

Downloaded from SAE International by Tara Casaletto, Monday, January 09, 2023

5.9.2.2 Request Vehicle Information Response Message Definition (Report Supported InfoType)

TABLE 85—REQUEST VEHICLE INFORMATION RESPONSE MESSAGE (REPORT SUPPORTED INFOTYPE)

Data Byte	Parameter Name	Cvt	Hex Value	Mnemonic
#1	Request vehicle information response SID	**M**	**49**	**SIDPR**
#2	InfoType	M	xx	INFTYP_
#3	MessageCount	M	xx	MC_
	data record of InfoType = [			DATAREC_
#4	Data A: supported InfoTypes,	M/C	xx	DATA_A
#5	Data B: supported InfoTypes,	M/C	xx	DATA_B
#6	Data C: supported InfoTypes,	M/C	xx	DATA_C
#7	Data D: supported InfoTypes]	M/C	xx	DATA_D
C = Conditional — Data A - D shall not be included if InfoType equals an odd number (MessageCount)				

5.9.2.3 Request Vehicle Information Request Message Definition (Read InfoType Values)

TABLE 86—REQUEST VEHICLE INFORMATION REQUEST MESSAGE (READ INFOTYPE VALUES)

Data Byte	Parameter Name	Cvt	Hex Value	Mnemonic
#1	**Request vehicle information request SID**	**M**	**09**	**SIDRQ**
#2	InfoType	M	xx	INFTYP_

5.9.2.4 Request Vehicle Information Response Message Definition (report InfoType values)

TABLE 87—REQUEST VEHICLE INFORMATION RESPONSE MESSAGE (REPORT INFOTYPE VALUES)

Data Byte	Parameter Name	Cvt	Hex Value	Mnemonic
#1	**Request vehicle information response SID**	**M**	**49**	**SIDPR**
#2	InfoType	M	xx	INFTYP_
#3	MessageCount	M	xx	MC_
#4	data record of InfoType = [Data A,	M/C	xx	DATA_A
#5	Data B,	M/C	xx	DATA_B
#6	Data C,	M/C	xx	DATA_C
#7	Data D]	M/C	xx	DATA_D
C = Conditional — data A - D is only present if the requested InfoType equals an even number				

5.9.3 PARAMETER DEFINITION

5.9.3.1 Vehicle Information Types Supported—Refer to Appendix A.

5.9.3.2 Vehicle Information Types and Data Byte Descriptions—Refer to Appendix G.

5.9.3.3 MessageCount Description—Refer to Appendix G.

Downloaded from SAE International by Tara Casaletto, Monday, January 09, 2023

5.9.4 MESSAGE EXAMPLE—The example below shows how the "Request vehicle information" service shall be implemented.

5.9.4.1 Step #1: Request Vehicle Information (Request Supported InfoType) from Vehicle—The external test equipment requests all supported InfoTypes from the vehicle. Refer to the example of service $01 how to request supported PIDs (same concept is used for supported InfoTypes). As a result of the supported InfoType request the external test equipment creates an internal list of supported PIDs for each ECU: The ECU #1 (ECM) supports the following InfoTypes: $01, $02, $03, $04, $05, $06, $07, and $08. Since there is only one ECU, which meets emission-related legislative requirements, no response messages from another ECU will occur.

5.9.4.2 Step #2: Request InfoTypes from Vehicle—Now the external test equipment requests the following InfoType:

— InfoType $01: MC_VIN = 5 response messages; supported by ECU#1

TABLE 88—REQUEST VEHICLE INFORMATION REQUEST MESSAGE

Message direction:	**External test equipment → All ECUs**		
Message Type:	**Request**		
Data Byte	**Description (all values are in hexadecimal)**	**Byte Value (Hex)**	**Mnemonic**
#1	Request vehicle information request SID	09	SIDRQ
#2	InfoType: MessageCount VIN	01	INFTYP

TABLE 89—REQUEST VEHICLE INFORMATION RESPONSE MESSAGE

Message direction:	**ECU#1 → External test equipment**		
Message Type:	**Response**		
Data Byte	**Description (all values are in hexadecimal)**	**Byte Value (Hex)**	**Mnemonic**
#1	Request vehicle information response SID	49	SIDPR
#2	InfoType: MessageCount VIN	01	INFTYP
#3	MessageCount VIN = 5 response messages	05	MC_VIN

Now the external test equipment requests the following InfoType:

— InfoType $02: VIN = [1G1JC5444R7252367] supported by ECU#1

TABLE 90—REQUEST VEHICLE INFORMATION REQUEST MESSAGE

Message direction:	**External test equipment → All ECUs**		
Message Type:	**Request**		
Data Byte	**Description (all values are in hexadecimal)**	**Byte Value (Hex)**	**Mnemonic**
#1	Request vehicle information request SID	09	SIDRQ
#2	InfoType: VIN	02	INFTYP

Downloaded from SAE International by Tara Casaletto, Monday, January 09, 2023

TABLE 91—REQUEST VEHICLE INFORMATION RESPONSE MESSAGE (1)

Message direction:	**ECU#1 → External test equipment**		
Message Type:	**Response**		
Data Byte	**Description (all values are in hexadecimal)**	**Byte Value (Hex)**	**Mnemonic**
#1	Request vehicle information response SID	49	SIDPR
#2	InfoType: VIN	02	INFTYP
#3	MessageCount VIN = 1st response message	01	MC_VIN
#4	Data A: Fill byte	00	DATA_A
#5	Data B: Fill byte	00	DATA_B
#6	Data C: Fill byte	00	DATA_C
#7	Data D: ‘1’	31	DATA_D

TABLE 92—REQUEST VEHICLE INFORMATION RESPONSE MESSAGE (2)

Message direction:	**ECU#1 → External test equipment**		
Message Type:	**Response**		
Data Byte	**Description (all values are in hexadecimal)**	**Byte Value (Hex)**	**Mnemonic**
#1	Request vehicle information response SID	49	SIDPR
#2	InfoType: VIN	02	INFTYP
#3	MessageCount VIN = 2nd response message	02	MC_VIN
#4	Data A: ‘G’	47	DATA_A
#5	Data B: ‘1’	31	DATA_B
#6	Data C: ‘J’	4A	DATA_C
#7	Data D: ‘C’	43	DATA_D

TABLE 93—REQUEST VEHICLE INFORMATION RESPONSE MESSAGE (3)

Message direction:	ECU#1 → External test equipment		
Message Type:	Response		
Data Byte	**Description (all values are in hexadecimal)**	**Byte Value (Hex)**	**Mnemonic**
#1	Request vehicle information response SID	49	SIDPR
#2	InfoType: VIN	02	INFTYP
#3	MessageCount VIN = 3rd response message	03	MC_VIN
#4	Data A: ‘5’	35	DATA_A
#5	Data B: ‘4’	34	DATA_B
#6	Data C: ‘4’	34	DATA_C
#7	Data D: ‘4’	34	DATA_D

Downloaded from SAE International by Tara Casaletto, Monday, January 09, 2023

TABLE 94—REQUEST VEHICLE INFORMATION RESPONSE MESSAGE (4)

Message direction:	ECU#1 → External test equipment		
Message Type:	Response		
Data Byte	**Description (all values are in hexadecimal)**	**Byte Value (Hex)**	**Mnemonic**
#1	Request vehicle information response SID	49	SIDPR
#2	InfoType: VIN	02	INFTYP
#3	MessageCount VIN = 4th response message	04	MC_VIN
#4	Data A: ‘R’	52	DATA_A
#5	Data B: ‘7’	37	DATA_B
#6	Data C: ‘2’	32	DATA_C
#7	Data D: ‘5’	35	DATA_D

TABLE 95—REQUEST VEHICLE INFORMATION RESPONSE MESSAGE (5)

Message direction:	ECU#1 → External test equipment		
Message Type:	Response		
Data Byte	**Description (all values are in hexadecimal)**	**Byte Value (Hex)**	**Mnemonic**
#1	Request vehicle information response SID	49	SIDPR
#2	InfoType: VIN	02	INFTYP
#3	MessageCount VIN = 5th response message	05	MC_VIN
#4	Data A: ‘2’	32	DATA_A
#5	Data B: ‘3’	33	DATA_B
#6	Data C: ‘6’	36	DATA_C
#7	Data D: ‘7’	37	DATA_D

Now the external test equipment requests the following InfoType:

— InfoType $03: MessageCount Calibration ID = $04; supported by ECU#1

TABLE 96—REQUEST VEHICLE INFORMATION REQUEST MESSAGE

Message direction:	External test equipment → All ECUs		
Message Type:	Request		
Data Byte	**Description (all values are in hexadecimal)**	**Byte Value (Hex)**	**Mnemonic**
#1	Request vehicle information request SID	09	SIDRQ
#2	InfoType: MessageCount Calibration ID	03	INFTYP

TABLE 97—REQUEST VEHICLE INFORMATION RESPONSE MESSAGE

Message direction:	ECU#1 → External test equipment		
Message Type:	Response		
Data Byte	**Description (all values are in hexadecimal)**	**Byte Value (Hex)**	**Mnemonic**
#1	Request vehicle information response SID	49	SIDPR
#2	InfoType: MessageCount Calibration ID	03	INFTYP
#3	MessageCount Calibration ID = 4 response messages	04	MC_CALID

Downloaded from SAE International by Tara Casaletto, Monday, January 09, 2023

Now the external test equipment requests the following InfoType:

— InfoType $04: CALID = [JMB*36761500]; supported by ECU#1;

TABLE 98—REQUEST VEHICLE INFORMATION REQUEST MESSAGE

Message direction:	External test equipment → All ECUs		
Message Type:	Request		
Data Byte	**Description (all values are in hexadecimal)**	**Byte Value (Hex)**	**Mnemonic**
#1	Request vehicle information request SID	09	SIDRQ
#2	InfoType: Calibration ID	04	INFTYP

TABLE 99—REQUEST VEHICLE INFORMATION RESPONSE MESSAGE (1)

Message direction:	ECU#1 → External test equipment		
Message Type:	Response		
Data Byte	**Description (all values are in hexadecimal)**	**Byte Value (Hex)**	**Mnemonic**
#1	Request vehicle information response SID	49	SIDPR
#2	InfoType: Calibration ID	04	INFTYP
#3	MessageCount Calibration ID = 1st response message	01	MC_CALID
#4	Data A: ‘J’	4A	DATA_A
#5	Data B: ‘M’	4D	DATA_B
#6	Data C: ‘B’	42	DATA_C
#7	Data D: ‘*’	2A	DATA_D

TABLE 100—REQUEST VEHICLE INFORMATION RESPONSE MESSAGE (2)

Message direction:	ECU#1 → External test equipment		
Message Type:	Response		
Data Byte	**Description (all values are in hexadecimal)**	**Byte Value (Hex)**	**Mnemonic**
#1	Request vehicle information response SID	49	SIDPR
#2	InfoType: Calibration ID	04	INFTYP
#3	MessageCount Calibration ID = 2nd response message	02	MC_CALID
#4	Data A: ‘3’	33	DATA_A
#5	Data B: ‘6’	36	DATA_B
#6	Data C: ‘7’	37	DATA_C
#7	Data D: ‘6’	36	DATA_D

Downloaded from SAE International by Tara Casaletto, Monday, January 09, 2023

TABLE 101—REQUEST VEHICLE INFORMATION RESPONSE MESSAGE (3)

Message direction:	ECU#1 → External test equipment		
Message Type:	Response		
Data Byte	**Description (all values are in hexadecimal)**	**Byte Value (Hex)**	**Mnemonic**
#1	Request vehicle information response SID	49	SIDPR
#2	InfoType: Calibration ID	04	INFTYP
#3	MessageCount Calibration ID = 3rd response message	03	MC_CALID
#4	Data A: '1'	31	DATA_A
#5	Data B: '5'	35	DATA_B
#6	Data C: '0'	30	DATA_C
#7	Data D: '0'	30	DATA_D

TABLE 102—REQUEST VEHICLE INFORMATION RESPONSE MESSAGE (4)

Message direction:	ECU#1 → External test equipment		
Message Type:	Response		
Data Byte	**Description (all values are in hexadecimal)**	**Byte Value (Hex)**	**Mnemonic**
#1	Request vehicle information response SID	49	SIDPR
#2	InfoType: Calibration ID	04	INFTYP
#3	MessageCount Calibration ID = 4th response message	04	MC_CALID
#4	Data A: Fill byte	00	DATA_A
#5	Data B: Fill byte	00	DATA_B
#6	Data C: Fill byte	00	DATA_C
#7	Data D: Fill byte	00	DATA_D

Now the external test equipment requests the following InfoType:

— InfoType $05: MessageCount Calibration Verification Number = $06; supported by ECU#1 and ECU#2

TABLE 103—REQUEST VEHICLE INFORMATION REQUEST MESSAGE

Message direction:	External test equipment → All ECUs		
Message Type:	Request		
Data Byte	**Description (all values are in hexadecimal)**	**Byte Value (Hex)**	**Mnemonic**
#1	Request vehicle information request SID	09	SIDRQ
#2	InfoType: MessageCount Calibration Verification Number	05	INFTYP

TABLE 104—REQUEST VEHICLE INFORMATION RESPONSE MESSAGE

Message direction:	ECU#1 → External test equipment		
Message Type:	Response		
Data Byte	**Description (all values are in hexadecimal)**	**Byte Value (Hex)**	**Mnemonic**
#1	Request vehicle information response SID	49	SIDPR
#2	InfoType: MessageCount Calibration Verification Number	05	INFTYP
#3	MessageCount Calibration Verification Number = 2 response messages	02	MC_CVN

Downloaded from SAE International by Tara Casaletto, Monday, January 09, 2023

TABLE 105—REQUEST VEHICLE INFORMATION RESPONSE MESSAGE

Message direction:	ECU#2 → External test equipment		
Message Type:	Response		
Data Byte	**Description (all values are in hexadecimal)**	**Byte Value (Hex)**	**Mnemonic**
#1	Request vehicle information response SID	49	SIDPR
#2	InfoType: MessageCount Calibration Verification Number	05	INFTYP
#3	MessageCount Calibration Verification Number = 1 response message	01	MC_CVN

Now the external test equipment requests the following InfoType:

— InfoType $06: CVN#1 = [17 91 BC 82]; supported by ECU#1
— InfoType $06: CVN#2 = [16 E0 62 BE]; supported by ECU#1
— InfoType $06: CVN = [98 12 34 76]; supported by ECU#2

TABLE 106—REQUEST VEHICLE INFORMATION REQUEST MESSAGE

Message direction:	External test equipment → All ECUs		
Message Type:	Request		
Data Byte	**Description (all values are in hexadecimal)**	**Byte Value (Hex)**	**Mnemonic**
#1	Request vehicle information request SID	09	SIDRQ
#2	InfoType: Calibration Verification Number	06	INFTYP

TABLE 107—REQUEST VEHICLE INFORMATION RESPONSE MESSAGE (1)

Message direction:	ECU#1 → External test equipment		
Message Type:	Response		
Data Byte	**Description (all values are in hexadecimal)**	**Byte Value (Hex)**	**Mnemonic**
#1	Request vehicle information response SID	49	SIDPR
#2	InfoType: Calibration Verification Number	06	INFTYP
#3	MessageCount Calibration Verification Number = 1st response message	01	MC_CVN
#4	Data A: 17	17	DATA_A
#5	Data B: 91	91	DATA_B
#6	Data C: BC	BC	DATA_C
#7	Data D: 82	82	DATA_D

NOTE— Depending on which protocol the vehicle supports the following situations may occur:

— If the vehicle supports ISO 9141-2 the external test equipment may need to repeat the request message multiple times before the ECU(s) send a response message.
— If the vehicle supports SAE J1850 the external test equipment may need to repeat the request message before the ECU(s) send a response message.
— If the vehicle supports ISO 14230-4 the ECU(s) may send a negative response message with response code $22 - conditionsNotCorrect if e.g., the engine is running. After the vehicle conditions have been adjusted to meet this service request the external test equipment shall repeat the request message and the ECU(s) shall send a positive response message.

Downloaded from SAE International by Tara Casaletto, Monday, January 09, 2023

TABLE 108—REQUEST VEHICLE INFORMATION RESPONSE MESSAGE (2)

Message direction:	ECU#1 → External test equipment		
Message Type:	Response		
Data Byte	**Description (all values are in hexadecimal)**	**Byte Value (Hex)**	**Mnemonic**
#1	Request vehicle information response SID	49	SIDPR
#2	InfoType: Calibration Verification Number	06	INFTYP
#3	MessageCount Calibration Verification Number = 2nd response message	02	MC_CVN
#4	Data A: 16	16	DATA_A
#5	Data B: E0	E0	DATA_B
#6	Data C: 62	62	DATA_C
#7	Data D: BE	BE	DATA_D

TABLE 109—REQUEST VEHICLE INFORMATION RESPONSE MESSAGE (3)

Message direction:	ECU#2 → External test equipment		
Message Type:	Response		
Data Byte	**Description (all values are in hexadecimal)**	**Byte Value (Hex)**	**Mnemonic**
#1	Request vehicle information response SID	49	SIDPR
#2	InfoType: Calibration Verification Number	06	INFTYP
#3	MessageCount Calibration Verification Number = 1st response message	01	MC_CVN
#4	Data A: 98	98	DATA_A
#5	Data B: 12	12	DATA_B
#6	Data C: 34	34	DATA_C
#7	Data D: 76	76	DATA_D

Now the external test equipment requests the following InfoType:

— InfoType $07: MessageCount In-use Performance Tracking = $08; supported by ECU#1

TABLE 110—REQUEST VEHICLE INFORMATION REQUEST MESSAGE

Message direction:	External test equipment → All ECUs		
Message Type:	Request		
Data Byte	**Description (all values are in hexadecimal)**	**Byte Value (Hex)**	**Mnemonic**
#1	Request vehicle information request SID	09	SIDRQ
#2	InfoType: MessageCount In-use Performance Tracking	07	INFTYP

TABLE 111—REQUEST VEHICLE INFORMATION RESPONSE MESSAGE

Message direction:	ECU#1 → External test equipment		
Message Type:	Response		
Data Byte	**Description (all values are in hexadecimal)**	**Byte Value (Hex)**	**Mnemonic**
#1	Request vehicle information response SID	49	SIDPR
#2	InfoType: MessageCount In-use Performance Tracking	07	INFTYP
#3	MessageCount In-use Performance Tracking = 8 response messages	08	MC_IPT

Downloaded from SAE International by Tara Casaletto, Monday, January 09, 2023

Now the external test equipment requests the following InfoType:

— InfoType $08: MC_IPT = 8 response messages; supported by ECU#1;

TABLE 112—REQUEST VEHICLE INFORMATION REQUEST MESSAGE

Message direction:	**External test equipment → All ECUs**		
Message Type:	**Request**		
Data Byte	**Description (all values are in hexadecimal)**	**Byte Value (Hex)**	**Mnemonic**
#1	Request vehicle information request SID	09	SIDRQ
#2	InfoType: In-use Performance Tracking	08	INFTYP

TABLE 113—REQUEST VEHICLE INFORMATION RESPONSE MESSAGE (1)

Message direction:	**ECU#1 → External test equipment**		
Message Type:	**Response**		
Data Byte	**Description (all values are in hexadecimal)**	**Byte Value (Hex)**	**Mnemonic**
#1	Request vehicle information response SID	49	SIDPR
#2	InfoType: In-use Performance Tracking	08	INFTYP
#3	MessageCount In-use Performance Tracking = 1st response message	01	MC_IPT
#4	OBDCOND_A: 1024 counts	04	OBDCOND_A
#5	OBDCOND_B: 1024 counts	00	OBDCOND_B
#6	IGNCNTR_A: 3337 counts	0D	IGNCNTR_A
#7	IGNCNTR_B: 3337 counts	09	IGNCNTR_B

TABLE 114—REQUEST VEHICLE INFORMATION RESPONSE MESSAGE (2)

Message direction:	**ECU#1 → External test equipment**		
Message Type:	**Response**		
Data Byte	**Description (all values are in hexadecimal)**	**Byte Value (Hex)**	**Mnemonic**
#1	Request vehicle information response SID	49	SIDPR
#2	InfoType: In-use Performance Tracking	08	INFTYP
#3	MessageCount In-use Performance Tracking = 2nd response message	02	MC_IPT
#4	CATCOMP1_A: 824 counts	03	CATCOMP1_A
#5	CATCOMP1_B: 824 counts	38	CATCOMP1_B
#6	CATCOND1_A: 945 counts	03	CATCOND1_A
#7	CATCOND1_B: 945 counts	B1	CATCOND1_B

Downloaded from SAE International by Tara Casaletto, Monday, January 09, 2023

TABLE 115—REQUEST VEHICLE INFORMATION RESPONSE MESSAGE (3)

Message direction:	ECU#1 → External test equipment		
Message Type:	Response		
Data Byte	**Description (all values are in hexadecimal)**	**Byte Value (Hex)**	**Mnemonic**
#1	Request vehicle information response SID	49	SIDPR
#2	InfoType: In-use Performance Tracking	08	INFTYP
#3	MessageCount In-use Performance Tracking = 3rd response message	03	MC_IPT
#4	CATCOMP2_A: 711 counts	02	CATCOMP2_A
#5	CATCOMP2_B: 711 counts	C7	CATCOMP2_B
#6	CATCOND2_A: 945 counts	03	CATCOND2_A
#7	CATCOND2_B: 945 counts	B1	CATCOND2_B

TABLE 116—REQUEST VEHICLE INFORMATION RESPONSE MESSAGE (4)

Message direction:	ECU#1 → External test equipment		
Message Type:	Response		
Data Byte	**Description (all values are in hexadecimal)**	**Byte Value (Hex)**	**Mnemonic**
#1	Request vehicle information response SID	49	SIDPR
#2	InfoType: In-use Performance Tracking	08	INFTYP
#3	MessageCount In-use Performance Tracking = 4th response message	04	MC_IPT
#4	O2SCOMP1_A: 737 counts	02	O2SCOMP1_A
#5	O2SCOMP1_B: 737 counts	E1	O2SCOMP1_B
#6	O2SCOND1_A: 924 counts	03	O2SCOND1_A
#7	O2SCOND1_B: 924 counts	9C	O2SCOND1_B

TABLE 117—REQUEST VEHICLE INFORMATION RESPONSE MESSAGE (5)

Message direction:	ECU#1 → External test equipment		
Message Type:	Response		
Data Byte	**Description (all values are in hexadecimal)**	**Byte Value (Hex)**	**Mnemonic**
#1	Request vehicle information response SID	49	SIDPR
#2	InfoType: In-use Performance Tracking	08	INFTYP
#3	MessageCount In-use Performance Tracking = 5th response message	05	MC_IPT
#4	O2SCOMP2_A: 724 counts	02	O2SCOMP2_A
#5	O2SCOMP2_B: 724 counts	D4	O2SCOMP2_B
#6	O2SCOND2_A: 833 counts	03	O2SCOND2_A
#7	O2SCOND2_B: 833 counts	41	O2SCOND2_B

Downloaded from SAE International by Tara Casaletto, Monday, January 09, 2023

TABLE 118—REQUEST VEHICLE INFORMATION RESPONSE MESSAGE (6)

Message direction:	ECU#1 → External test equipment		
Message Type:	Response		
Data Byte	**Description (all values are in hexadecimal)**	**Byte Value (Hex)**	**Mnemonic**
#1	Request vehicle information response SID	49	SIDPR
#2	InfoType: In-use Performance Tracking	08	INFTYP
#3	MessageCount In-use Performance Tracking = 6th response message	06	MC_IPT
#4	EGRCOMP_A: 997 counts	03	EGRCOMP_A
#5	EGRCOMP_B: 997 counts	E5	EGRCOMP_B
#6	EGRCOND_A: 1010 counts	03	EGRCOND_A
#7	EGRCOND_B: 1010 counts	F2	EGRCOND_B

TABLE 119—REQUEST VEHICLE INFORMATION RESPONSE MESSAGE (7)

Message direction:	ECU#1 → External test equipment		
Message Type:	Response		
Data Byte	**Description (all values are in hexadecimal)**	**Byte Value (Hex)**	**Mnemonic**
#1	Request vehicle information response SID	49	SIDPR
#2	InfoType: In-use Performance Tracking	08	INFTYP
#3	MessageCount In-use Performance Tracking = 7th response message	07	MC_IPT
#4	AIRCOMP_A: 937 counts	03	AIRCOMP_A
#5	AIRCOMP_B: 937 counts	A9	AIRCOMP_B
#6	AIRCOND_A: 973 counts	03	AIRCOND_A
#7	AIRCOND_B: 973 counts	CD	AIRCOND_B

TABLE 120—REQUEST VEHICLE INFORMATION RESPONSE MESSAGE (8)

Message direction:	ECU#1 → External test equipment		
Message Type:	Response		
Data Byte	**Description (all values are in hexadecimal)**	**Byte Value (Hex)**	**Mnemonic**
#1	Request vehicle information response SID	49	SIDPR
#2	InfoType: In-use Performance Tracking	08	INFTYP
#3	MessageCount In-use Performance Tracking = 8th response message	08	MC_IPT
#4	EVAPCOMP_A: 68 counts	00	EVAPCOMP_A
#5	EVAPCOMP_B: 68 counts	44	EVAPCOMP_B
#6	EVAPCOND_A: 97 counts	00	EVAPCOND_A
#7	EVAPCOND_B: 97 counts	61	EVAPCOND_B

Downloaded from SAE International by Tara Casaletto, Monday, January 09, 2023

6. Diagnostic Service Definition for ISO 15765-4

6.1 Service $01 - Request Current Powertrain Diagnostic Data

6.1.1 FUNCTIONAL DESCRIPTION—The purpose of this service is to allow access to current emission-related data values, including analogue inputs and outputs, digital inputs and outputs, and system status information. The request for information includes a parameter identification (PID) value that indicates to the on-board system the specific information requested. PID specifications, scaling information, and display formats are included in Appendix B.

The ECU(s) will respond to this message by transmitting the requested data value last determined by the system. All data values returned for sensor readings will be actual readings, not default or substitute values used by the system because of a fault with that sensor.

Not all PIDs are applicable or supported by all systems. PID $00 is a bit-encoded value that indicates for each ECU which PIDs are supported. PID $00 indicates support for PIDs from $01 to $20. PID $20 indicates support for PIDs $21 through $40, etc. This is the same concept for PIDs/OBD Monitor IDs/TIDs/InfoTypes support in services $01, $02, $06, $08, $09. PID $00 is required for those ECUs that respond to a corresponding service $01 request message as specified in Appendix A. PID $00 is optional for those ECUs that do not respond to additional service $01 request messages.

The order of the PIDs in the response message is not required to match the order in the request message.

6.1.2 MESSAGE DATA BYTES

6.1.2.1 Request Current Powertrain Diagnostic Data Request Message Definition (Read Supported PIDs)

TABLE 121—REQUEST CURRENT POWERTRAIN DIAGNOSTIC DATA REQUEST MESSAGE (READ SUPPORTED PIDS)

Data Byte	Parameter Name	Cvt	Hex Value	Mnemonic
#1	**Request current powertrain diagnostic data request SID**	**M**	**01**	**SIDRQ**
#2	PID#1 (PIDs supported: see Appendix A)	M	xx	PID
#3	PID#2 (PIDs supported: see Appendix A)	U	xx	PID
#4	PID#3 (PIDs supported: see Appendix A)	U	xx	PID
#5	PID#4 (PIDs supported: see Appendix A)	U	xx	PID
#6	PID#5 (PIDs supported: see Appendix A)	U	xx	PID
#7	PID#6 (PIDs supported: see Appendix A)	U	xx	PID
U = User Optional — PID may be included to avoid multiple PID supported request messages				

NOTE— To request PIDs supported range from $C1 - $FF another request message with PID#1 = $C0 and PID#2 = $E0 shall be sent to the vehicle.

Downloaded from SAE International by Tara Casaletto, Monday, January 09, 2023

6.1.2.2 Request Current Powertrain Diagnostic Data Response Message Definition (Report Supported PIDs)— ECU(s) must respond to all supported ranges if requested. A range is defined as a block of 32 PIDs (e.g., range #1: PID $01-$20). The ECU shall not respond to unsupported PID ranges unless subsequent ranges have a supported PID(s).

TABLE 122—REQUEST CURRENT POWERTRAIN DIAGNOSTIC DATA RESPONSE MESSAGE (REPORT SUPPORTED PIDS)

Data Byte	Parameter Name	Cvt	Hex Value	Mnemonic
#1	**Request current powertrain diagnostic data response SID**	**M**	**41**	**SIDPR**
	data record of supported PIDs = [			PIDREC_
#2	1st supported PID	M	xx	PID
#3	Data A: supported PIDs,	M	xx	DATA_A
#4	Data B: supported PIDs,	M	xx	DATA_B
#5	Data C: supported PIDs,	M	xx	DATA_C
#6	Data D: supported PIDs]	M	xx	DATA_D
:	:	:	:	:
	data record of supported PIDs = [			PIDREC_
#n-4	mth supported PID	C1	xx	PID
#n-3	Data A: supported PIDs,	C2	xx	DATA_A
#n-2	Data B: supported PIDs,	C2	xx	DATA_B
#n-1	Data C: supported PIDs,	C2	xx	DATA_C
#n	Data D: supported PIDs]	C2	xx	DATA_D

C1 = Conditional — PID value shall be the same value as included in the request message if supported by the ECU
C2 = Conditional — value indicates PIDs supported; range of supported PIDs depends on selected PID value (see C1)

NOTE— The response message shall only include the PID(s) and Data A - D which are supported by the ECU. If the request message includes (a) PID value(s) which are not supported by the ECU those shall not be included in the response message.

6.1.2.3 Request Current Powertrain Diagnostic Data Request Message Definition (Read PID Values)

TABLE 123—REQUEST CURRENT POWERTRAIN DIAGNOSTIC DATA REQUEST MESSAGE

Data Byte	Parameter Name	Cvt	Hex Value	Mnemonic
#1	**Request current powertrain diagnostic data request SID**	**M**	**01**	**SIDRQ**
#2	PID#1 (see Appendix B)	M/C	xx	PID
#3	PID#2 (see Appendix B)	U/C	xx	PID
#4	PID#3 (see Appendix B)	U/C	xx	PID
#5	PID#4 (see Appendix B)	U/C	xx	PID
#6	PID#5 (see Appendix B)	U/C	xx	PID
#7	PID#6 (see Appendix B)	U/C	xx	PID

U = User Optional — the parameter may be present or not
C = Conditional — if a PID is not supported but requested then there shall be no response for that PID

Downloaded from SAE International by Tara Casaletto, Monday, January 09, 2023

6.1.2.4 Request Current Powertrain Diagnostic Data Response Message Definition (Report PID Values)

TABLE 124—REQUEST CURRENT POWERTRAIN DIAGNOSTIC DATA RESPONSE MESSAGE

Data Byte	Parameter Name	Cvt	Hex Value	Mnemonic
#1	**Request current powertrain diagnostic data response SID**	**M**	**41**	**SIDPR**
	data record of 1st supported PID = [			PIDREC_
#2	PID#1	M	xx	PID
#3	data A,	M	xx	DATA_A
#4	data B,	C1	xx	DATA_B
#5	data C,	C1	xx	DATA_C
#6	data D]	C1	xx	DATA_D
:	:	:	:	:
	data record of mth supported PID = [			PIDREC_
#n-4	PID#m	C2	xx	PID
#n-3	data A,	C2	xx	DATA_A
#n-2	data B,	C3	xx	DATA_B
#n-1	data C,	C3	xx	DATA_C
#n	data D]	C3	xx	DATA_D

C1 = Conditional — “data B - D” depend on selected PID value
C2 = Conditional — parameter is only present if supported by the ECU
C3 = Conditional — parameters and values for “data B - D” depend on selected PID number and are only included if PID is supported by the ECU

NOTE— Not all PIDs, which are included in the request message may be supported by all emission-related ECUs, which shall comply with this specification. Therefore, each vehicle ECU, which supports at least one (1) PID, shall send a response message including the PID(s) with data.

6.1.3 PARAMETER DEFINITION

6.1.3.1 PIDs Supported—“Appendix A” specifies the interpretation of the data record of supported PIDs.

6.1.3.2 PID and Data Byte Descriptions—“Appendix B” specifies standardised emission-related parameters.

6.1.4 MESSAGE EXAMPLE—The following example shows how the “Request current powertrain diagnostic data” service shall be implemented.

6.1.4.1 Step #1: Request Supported PIDs from Vehicle—The external test equipment requests supported PIDs ($00, $20, $40, $60, $80, $A0) from the vehicle. Refer to Appendix A to interpret the data bytes in the response messages.

NOTE— ECU(s) must respond to all supported ranges if requested. A range is defined as a block of 32 PIDs (e.g., range #1: PID $01-$20). The ECU shall not respond to unsupported PID ranges unless subsequent ranges have a supported PID(s).

Downloaded from SAE International by Tara Casaletto, Monday, January 09, 2023

TABLE 125—REQUEST CURRENT POWERTRAIN DIAGNOSTIC DATA REQUEST MESSAGE

Message direction:	External test equipment → All ECUs		
Message Type:	Request		
Data Byte	**Description (All PID values are in hexadecimal)**	**Byte Value (Hex)**	**Mnemonic**
#1	Request current powertrain diagnostic data request SID	01	SIDRQ
#2	PID used to determine PID support for PIDs 01-20	00	PID
#3	PID used to determine PID support for PIDs 21-40	20	PID
#4	PID used to determine PID support for PIDs 41-60	40	PID
#5	PID used to determine PID support for PIDs 61-80	60	PID
#6	PID used to determine PID support for PIDs 81-A0	80	PID
#7	PID used to determine PID support for PIDs A1-C0	A0	PID

TABLE 126—ECU#1 RESPONSE: REQUEST CURRENT POWERTRAIN DIAGNOSTIC DATA RESPONSE MESSAGE

Message direction:	ECU#1 → External test		
Message Type:	Response		
Data Byte	**Description (All PID values are in hexadecimal)**	**Byte Value (Hex)**	**Mnemonic**
#1	Request current powertrain diagnostic data response SID	41	SIDPR
#2	PID requested	00	PID
#3	Data byte A, representing support for PIDs 01, 03-08	10111111b = $BF	DATA_A
#4	Data byte B, representing support for PIDs 09, 0B-10	10111111b = $BF	DATA_B
#5	Data byte C, representing support for PIDs 11, 13, 15	10101000b = $A8	DATA_C
#6	Data byte D, representing support for PIDs 19, 1C, 20	10010001b = $91	DATA_D
#7	PID requested	20	PID
#8	Data byte A, representing support for PID 21	10000000b = $80	DATA_A
#9	Data byte B, representing no support for PIDs 29-30	00000000b = $00	DATA_B
#10	Data byte C , representing no support for PIDs 31-38	00000000b = $00	DATA_C
#11	Data byte D, representing no support for PIDs 39-40	00000000b = $00	DATA_D

TABLE 127—ECU#2 RESPONSE: REQUEST CURRENT POWERTRAIN DIAGNOSTIC DATA RESPONSE MESSAGE

Message direction:	ECU#2 → External test equipment		
Message Type:	Response		
Data Byte	**Description (All PID values are in hexadecimal)**	**Byte Value (Hex)**	**Mnemonic**
#1	Request current powertrain diagnostic data response SID	41	SIDPR
#2	PID requested	00	PID
#3	Data byte A, representing support for PID 01	10000000b = $80	DATA_A
#4	Data byte B, representing support for PID 0D	00001000b = $08	DATA_B
#5	Data byte C , representing no support for PIDs 11-18	00000000b = $00	DATA_C
#6	Data byte D, representing no support for PIDs 19-20	00000000b = $00	DATA_D

Downloaded from SAE International by Tara Casaletto, Monday, January 09, 2023

Now the external test equipment creates an internal list of supported PIDs for each ECU. The ECU #1 (ECM) supports the following PIDs: $01, $03 - $09, $0B - $11, $13, $15, $19, $1C, $20, $21.

The ECU #2 (TCM) supports the following PIDs: $01 and $0D.

6.1.4.2 *Step #2: Request Multiple PIDs from Vehicle*—Now the external test equipment requests a combination of a maximum of six (6) PIDs in one request message to gain best performance of displaying current data.

— PID $15: Bank 1 - Sensor 2, PID is supported by ECU #1
— PID $01: Number of emission-related DTCs and MIL status, PID is supported by ECU #1 and #2
— PID $05: Engine coolant temperature, PID is supported by ECU #1
— PID $03: Fuel system 1 status, PID is supported by ECU #1
— PID $0C: Engine speed, PID is supported by ECU #1
— PID $0D: Vehicle speed PID is supported by ECU #2

TABLE 128—REQUEST CURRENT POWERTRAIN DIAGNOSTIC DATA REQUEST MESSAGE

Message direction:	**External test equipment → All ECUs**		
Message Type:	**Request**		
Data Byte	**Description (All PID values are in hexadecimal)**	**Byte Value (Hex)**	**Mnemonic**
#1	Request current powertrain diagnostic data request SID	01	SIDRQ
#2	PID: Bank 1 - Sensor 2	15	PID(15)
#3	PID: Number of emission-related DTCs and MIL status	01	PID(01)
#4	PID: Engine coolant temperature	05	PID(05)
#5	PID: Fuel system 1 status	03	PID(03)
#6	PID: Engine speed	0C	PID(0C)
#7	PID: Vehicle speed	0D	PID(0D)

Downloaded from SAE International by Tara Casaletto, Monday, January 09, 2023

TABLE 129—ECU#1 RESPONSE: REQUEST CURRENT POWERTRAIN DIAGNOSTIC DATA RESPONSE MESSAGE

Message direction:	**ECU#1 → External test equipment**		
Message Type:	**Response**		
Data Byte	**Description (All PID values are in hexadecimal)**	**Byte Value (Hex)**	**Mnemonic**
#1	Request current powertrain diagnostic data response SID	41	SIDPR
#2	PID: Engine coolant temperature	05	PID(05)
#3	Data byte A	6E	DATA(A)
#4	PID: Number of emission-related DTCs and MIL status	01	PID(01)
#5	MIL: ON; Number of emission-related DTCs: 03	83	DATA(A)
#6	Misfire -, Fuel system -, Comprehensive monitoring	33	DATA(B)
#7	Catalyst -, Heated catalyst -, …, monitoring supported	FF	DATA(C)
#8	Catalyst -, Heated catalyst -, …, monitoring test complete/not complete	63	DATA(D)
#9	PID: Bank 1 - Sensor 2	15	PID(15)
#10	Bank 2 - Sensor 2: 0.8 Volt	A0	DATA(A)
#11	Bank 2 - Sensor 2: 93.7 %	78	DATA(B)
#12	PID: Engine speed	0C	PID(0C)
#13	Data byte A: 667 rpm	0A	DATA(A)
#14	Data byte B: 667 rpm	6B	DATA(B)
#15	PID: Fuel system 1 status	03	PID(03)
#16	Data byte A: Closed loop - using oxygen sensor(s) as feedback for fuel control	02	DATA(A)
#17	Data byte B	00	DATA(B)

TABLE 130—ECU#2 RESPONSE: REQUEST CURRENT POWERTRAIN DIAGNOSTIC DATA RESPONSE MESSAGE

Message direction:	**ECU#2 → External test equipment**		
Message Type:	**Response**		
Data Byte	**Description (All PID values are in hexadecimal)**	**Byte Value (Hex)**	**Mnemonic**
#1	Request current powertrain diagnostic data response SID	41	SIDPR
#2	PID: Vehicle speed	0D	PID(0D)
#3	Data byte A	23	DATA(A)
#4	PID: Number of emission-related DTCs and MIL status	01	PID(01)
#5	MIL: OFF; Number of emission-related DTCs: 01	01	DATA(A)
#6	Comprehensive monitoring: supported, test complete	44	DATA(B)
#7	Catalyst -, Heated catalyst -, …, monitoring supported	00	DATA(C)
#8	Catalyst -, Heated catalyst -, …, monitoring test complete/not complete	00	DATA(D)

Downloaded from SAE International by Tara Casaletto, Monday, January 09, 2023

6.2 Service $02 - Request Powertrain Freeze Frame Data

6.2.1 FUNCTIONAL DESCRIPTION—The purpose of this service is to allow access to emission-related data values in a freeze frame. This allows expansion to meet manufacturer specific requirements not necessarily related to the required freeze frame, and not necessarily containing the same data values as the required freeze frame. The request message includes a parameter identification (PID) value that indicates to the on-board system the specific information requested. PID specifications, scaling information, and display formats for the freeze frame are included in Appendix B.

The ECU(s) will respond to this message by transmitting the requested data value stored by the system. All data values returned for sensor readings will be actual stored readings, not default or substitute values used by the system because of a fault with that sensor.

Service $02 PID $02 indicates the DTC that caused the freeze frame data to be stored. If freeze frame data is not stored in the ECU, the system shall report $00 00 as the DTC. Any data reported when the stored DTC is $00 00 may not be valid.

The frame number byte will indicate $00 for the freeze frame data. Manufacturers may optionally save additional freeze frames and use this service to obtain that data by specifying the freeze frame number in the request message. If a manufacturer uses these additional freeze frames, they will be stored under conditions specified by the manufacturer, and contain data specified by the manufacturer.

Not all PIDs are applicable or supported by all systems. PID $00 is a bit-encoded value that indicates for each ECU which PIDs are supported. PID $00 indicates support for PIDs from $01 to $20. PID $20 indicates support for PIDs $21 through $40, etc. This is the same concept for PIDs/TIDs/InfoTypes support in services $01, $02, $06, $08, $09. PID $00 is required for those ECUs that respond to a corresponding service $02 request message as specified in Appendix A. PID $00 is optional for those ECUs that do not respond to additional service $02 request messages.

The order of the PIDs in the response message is not required to match the order in the request message.

6.2.2 MESSAGE DATA BYTES

6.2.2.1 Request Powertrain Freeze Frame Data Request Message Definition (Read Supported PIDs)

TABLE 131—REQUEST POWERTRAIN FREEZE FRAME DATA REQUEST MESSAGE (READ SUPPORTED PIDS)

Data Byte	Parameter Name	Cvt	Hex Value	Mnemonic
#1	Request powertrain freeze frame data request SID	M	02	SIDRQ
#2	PID#1 (PIDs supported: Appendix A)	M	xx	PID
#3	frame #	M	xx	FRNO_
#4	PID#2 (PIDs supported: Appendix A)	U	xx	PID
#5	frame #	U/C	xx	FRNO_
#6	PID#3 (PIDs supported: Appendix A)	U	xx	PID
#7	frame #	U/C	xx	FRNO_
U = User Optional — PID may be included to reduce multiple PID supported request messages C = Conditional — parameter is only included if preceding PID# is included				

NOTE— To request PIDs supported range from $61 - $FF, multiple request messages with PIDs = $60, $80, $A0, $C0 and $E0 shall be sent to the vehicle.

Downloaded from SAE International by Tara Casaletto, Monday, January 09, 2023

6.2.2.2 Request Powertrain Feeze Fame Data Response Message Definition (Report supported PIDs)—ECU(s) must respond to all supported ranges if requested. A range is defined as a block of 32 PIDs (e.g., range #1: PID $01-$20). The ECU shall not respond to unsupported PID ranges unless subsequent ranges have a supported PID(s).

TABLE 132—REQUEST POWERTRAIN FREEZE FRAME DATA RESPONSE MESSAGE (REPORT SUPPORTED PIDS)

Data Byte	Parameter Name	Cvt	Hex Value	Mnemonic
#1	**Request powertrain freeze frame data response SID**	**M**	**42**	**SIDPR**
#2	1st supported PID	M	00	PID
#3	frame #	M	xx	FRNO_
	data record of supported PIDs = [			DATAREC
#4	Data A: supported PIDs,	M	xx	DATA_A
#5	Data B: supported PIDs,	M	xx	DATA_B
#6	Data C: supported PIDs,	M	xx	DATA_C
#7	Data D: supported PIDs]	M	xx	DATA_D
:	:	:	:	:
#n-5	mth supported PID	C1	xx	PID
#n-4	frame #	C1	xx	FRNO_
	data record of supported PIDs = [			DATAREC
#n-3	Data A: supported PIDs,	C2	xx	DATA_A
#n-2	Data B: supported PIDs,	C2	xx	DATA_B
#n-1	Data C: supported PIDs,	C2	xx	DATA_C
#n	Data D: supported PIDs]	C2	xx	DATA_D

C1 = Conditional — PID value shall be the same value as included in the request message if supported by the ECU
C2 = Conditional — value indicates PIDs supported; range of supported PIDs depends on selected PID value (see C1)

NOTE— The response message shall only include the PID(s) and Data A - D which are supported by the ECU. If the request message includes (a) PID value(s) which are not supported by the ECU those shall not be included in the response message.

6.2.2.3 Request Powertrain Freeze Frame Data Request Message Definition (Read Freeze Frame PID Values)

TABLE 133—REQUEST POWERTRAIN FREEZE FRAME DATA REQUEST MESSAGE (READ FREEZE FRAME PID VALUES)

Data Byte	Parameter Name	Cvt	Hex Value	Mnemonic
#1	**Request powertrain freeze frame data request SID**	**M**	**02**	**SIDRQ**
#2	PID#1 (see Appendix B)	M/C1	xx	PID
#3	frame #	M	xx	FRNO
#4	PID#2 (see Appendix B)	U/C1	xx	PID
#5	frame #	C2	xx	FRNO
#6	PID#3 (see Appendix B)	U/C1	xx	PID
#7	frame #	C2	xx	FRNO

U = User Optional — the parameter may be present or not
C1 = Conditional — if a PID is not supported but requested then there shall be no response for that PID
C2 = Conditional — parameter is only present if preceding PID# is present

Downloaded from SAE International by Tara Casaletto, Monday, January 09, 2023

6.2.2.4 Request Powertrain Freeze Frame Data Response Message Definition (Report Freeze Frame PID Values)

TABLE 134—REQUEST POWERTRAIN FREEZE FRAME DATA RESPONSE MESSAGE (REPORT FREEZE FRAME PID VALUES)

Data Byte	Parameter Name	Cvt	Hex Value	Mnemonic
#1	**Request powertrain freeze frame data response SID**	**M**	**42**	**SIDPR**
#2	1st supported PID	M	xx	PID_
#3	frame #	M	xx	FRNO_
#4 #5 #6 #7	data record of 1st supported PID = [data A, data B, data C, data D]	M C1 C1 C1	xx xx xx xx	DATA_A DATA_B DATA_C DATA_D
:	:	:	:	:
#2	mth supported PID	C2	xx	PID_
#3	frame #	C2	xx	FRNO_
#4 #5 #6 #7	data record of mth supported PID = [data A, data B, data C, data D]	C3 C4 C4 C4	xx xx xx xx	DATA_A DATA_B DATA_C DATA_D

C1 = Conditional — “data B - D” depend on selected PID
C2 = Conditional — parameter shall be the same value as included in the request message if supported
C3 = Conditional — data A shall be included if preceding PID is supported
C4 = Conditional — parameters and values for “data B - D” depend on selected PID number

6.2.3 PARAMETER DEFINITION

6.2.3.1 PIDs Supported—“Appendix A” specifies the interpretation of the data record of supported PIDs.

6.2.3.2 PID and Data Byte Descriptions—“Appendix B” specifies standardized emission-related parameters.

6.2.3.3 Frame # Description—The frame number identifies the freeze frame, which includes emission-related data values in case an emission-related DTC is detected by the ECU.

6.2.4 MESSAGE EXAMPLE—The example below shows how the “Request powertrain freeze frame data” service shall be implemented.

6.2.4.1 Step #1: Request Supported Powertrain Freeze Fame PIDs from Vehicle—The external test equipment requests all supported powertrain freeze frame PIDs of freeze frame $00 from the vehicle. Refer to the example of service $01 how to request supported PIDs.

As a result of the supported PID request the external test equipment creates an internal list of supported PIDs for each ECU: ECU #1 (ECM) supports the following PIDs: $01 - $09, $0B - $0E, ECU #2 (TCM) does not support any PIDs for this service.

6.2.4.2 Step #2: Request PID $02 “DTC which Caused Freeze Frame to be Stored” from Vehicle

Case #1: Freeze Frame Data are Stored in ECU #1:
Now the external test equipment requests PID $02 of freeze frame $00 from the vehicle. Since the ECU #2 (TCM) doesn’t store a freeze frame data record only the ECU #1 (ECM) will send a response message. In this example the freeze frame data are stored based on a DTC P0130 occurrence. The parameter value of PID $02 “DTC that caused required freeze frame data storage” is set to the DTC P0130.

Downloaded from SAE International by Tara Casaletto, Monday, January 09, 2023

TABLE 135—REQUEST POWERTRAIN FREEZE FRAME DATA REQUEST MESSGAE

Message direction:	External test equipment → All ECUs		
Message Type:	Request		
Data Byte	**Description (all values are in hexadecimal)**	**Byte Value (Hex)**	**Mnemonic**
#1	Request powertrain freeze frame data request SID	02	SIDRQ
#2	PID: Number of emission-related DTCs and MIL status	01	PID
#3	Frame #	00	FRNO
#4	PID: DTC that caused required freeze frame data storage	02	PID
#5	Frame #	00	FRNO

TABLE 136—REQUEST POWERTRAIN FREEZE FRAME DATA RESPONSE MESSAGE

Message direction:	ECU #1 → External test equipment		
Message Type:	Response		
Data Byte	**Description (all values are in hexadecimal)**	**Byte Value (Hex)**	**Mnemonic**
#1	Request powertrain freeze frame data response SID	42	SIDRQ
#2	PID: DTC that caused required freeze frame data storage	02	PID
#3	Frame #	00	FRNO
#4	DTC High Byte of P0130	01	DATA_A
#5	DTC Low Byte of P0130	30	DATA_B
#6	PID: Number of emission-related DTCs and MIL status	01	PID
#7	Frame #	00	FRNO
#8	MIL: ON; Number of emission-related DTCs: 01	81	DATA_A
#9	Misfire -, Fuel system -, Comprehensive monitoring	33	DATA_B
#10	Catalyst -, Heated catalyst -, …, monitoring supported	FF	DATA_C
#11	Catalyst -, Heated catalyst -, …, monitoring test complete/not complete	63	DATA_D

NOTE— ECU#2 does not store freeze frame data and therefore does not send a response message.

Now the external test equipment requests the parameter value of PID $0C “Engine Speed”, PID $05 “Engine coolant temperature”, and PID $04 “Load” stored in the freeze frame.

TABLE 137—REQUEST POWERTRAIN FREEZE FRAME DATA REQUEST MESSAGE

Message direction:	External test equipment → All ECUs		
Message Type:	Request		
Data Byte	**Description (all values are in hexadecimal)**	**Byte Value (Hex)**	**Mnemonic**
#1	Request powertrain freeze frame data request SID	02	SIDRQ
#2	PID: Engine Speed	0C	PID
#3	Frame #	00	FRNO
#4	PID: Engine coolant temperature	05	PID
#5	Frame #	00	FRNO
#4	PID: Load	04	PID
#5	Frame #	00	FRNO

Downloaded from SAE International by Tara Casaletto, Monday, January 09, 2023

TABLE 138—REQUEST POWERTRAIN FREEZE FRAME DATA RESPONSE MESSAGE

Message direction:	ECU #1 → External test equipment		
Message Type:	Response		
Data Byte	**Description (all values are in hexadecimal)**	**Byte Value (Hex)**	**Mnemonic**
#1	Request powertrain freeze frame data response SID	42	SIDRQ
#2	PID: Engine Speed	0C	PID
#3	Frame #	00	FRNO
#4	High Byte: Engine Speed: 2080 rpm	20	DATA_A
#5	Low Byte: Engine Speed: 2080 rpm	80	DATA_B
#6	PID: Load	04	PID
#7	Frame #	00	FRNO
#8	Load: 50.2 %	80	DATA_A
#9	PID: Engine coolant temperature	05	PID
#10	Frame #	00	FRNO
#11	Engine coolant temperature: 0 °C	28	DATA_A

Case #2: No Freeze Frame Data are Stored in any ECU:

If no freeze frame data are stored then the parameter value of PID $02 “DTC that caused required freeze frame data storage” is set to $00 00. If the external test equipment requests a PID ≠ $00 (excluding $00 and $02) the ECU shall not send a response message.

TABLE 139—REQUEST POWERTRAIN FREEZE FRAME DATA REQUEST MESSAGE

Message direction:	External test equipment → All ECUs		
Message Type:	Request		
Data Byte	**Description (all values are in hexadecimal)**	**Byte Value (Hex)**	**Mnemonic**
#1	Request powertrain freeze frame data request SID	02	SIDRQ
#2	PID: Number of emission-related DTCs and MIL status	01	PID
#3	Frame #	00	FRNO
#4	PID: DTC that caused required freeze frame data storage	02	PID
#5	Frame #	00	FRNO

TABLE 140—REQUEST POWERTRAIN FREEZE FRAME DATA RESPONSE MESSAGE

Message direction:	ECU #1 → External test equipment		
Message Type:	Response		
Data Byte	**Description (all values are in hexadecimal)**	**Byte Value (Hex)**	**Mnemonic**
#1	Request powertrain freeze frame data response SID	42	SIDRQ
#2	PID: DTC that caused required freeze frame data storage	02	PID
#3	Frame #	00	FRNO
#4	DTC High Byte of P0000 {no freeze frame data stored}	00	DATA_A
#5	DTC Low Byte of P0000 {no freeze frame data stored}	00	DATA_B

Downloaded from SAE International by Tara Casaletto, Monday, January 09, 2023

6.3 Service $03 - Request Emission-Related Diagnostic Trouble Codes

6.3.1 FUNCTIONAL DESCRIPTION—The purpose of this service is to enable the external test equipment to obtain "confirmed" emission-related DTCs.

Send a Service $03 request for all emission-related DTCs. Each ECU that has DTCs will respond with one (1) message containing all emission-related DTCs. If an ECU does not have emission-related DTCs then it shall respond with a message indicating no DTCs are stored by setting the parameter # of DTC to $00.

DTCs are transmitted in two (2) bytes of information for each DTC. The first two (2) bits (high order) of the first (1) byte for each DTC will be zeros to indicate whether the DTC is a Powertrain, Chassis, Body, or Network DTC (refer to SAE J2012 for additional interpretation of this structure). The second two (2) bits will indicate the first digit of the DTC (0 through 3). The second (2) nibble of the first (1) byte and the entire second (2) byte are the next three (3) hexadecimal characters of the actual DTC reported as hexadecimal. A Powertrain DTC transmitted as $0143 shall be displayed as P0143.

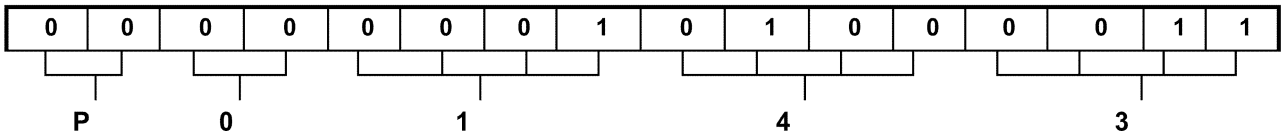

FIGURE 14—DIAGNOSTIC TROUBLE CODE ENCODING EXAMPLE DTC P0143

6.3.2 MESSAGE DATA BYTES

6.3.2.1 Request Emission-Related DTC Rquest Message Definition

TABLE 141—REQUEST EMISSION-RELATED DTC REQUEST MESSAGE

Data Byte	Parameter Name	Cvt	Hex Value	Mnemonic
#1	**Request emission-related DTC request SID**	**M**	**03**	**SIDRQ**

6.3.2.2 Request Emission-Related DTC Response Message Definition

TABLE 142—REQUEST EMISSION-RELATED DTC RESPONSE MESSAGE

Data Byte	Parameter Name	Cvt	Hex Value	Mnemonic
#1	**Request emission-related DTC response SID**	**M**	**43**	**SIDPR**
#2	# of DTC = [no emission-related DTCs stored emission-related DTCs stored]	M	xx = [00, 01 - FF	#OFDTC
#3 #4	DTC#1 (High Byte) DTC#1 (Low Byte)	C C	xx xx	DTC1HI DTC1LO
:	:	:	xx	
#n-1 #n	DTC#m (High Byte) DTC#m (Low Byte)	C C	xx xx	DTCmHI DTCmLO
C = Conditional — DTC#1 - DTC#m are only included if # of DTC parameter value ≠ $00				

Downloaded from SAE International by Tara Casaletto, Monday, January 09, 2023

6.3.3 PARAMETER DEFINITION

6.3.3.1 # of DTC Parameter Description—The # of DTC parameter reports the emission-related DTC(s) currently (at the time of the request message processing) stored in the ECU(s).

6.3.4 MESSAGE EXAMPLE—The example below shows how the "Request emission-related DTCs" service shall be implemented. The external test equipment requests emission-related DTCs from the vehicle. The ECU#1 (ECM) has six (6) DTCs stored, the ECU #2 (TCM) has one (1) DTC stored, and the ECU #3 (ABS/Traction Control) has no DTC stored.

— ECU #1 (ECM): P0143, P0196, P0234, P02CD, P0357, P0A24
— ECU #2 (TCM): P0443
— ECU #3 (ABS/Traction Control): no emission-related DTC stored

TABLE 143—REQUEST EMISSION-RELATED DIAGNOSTIC TROUBLE CODES REQUEST MESSAGE

Message direction:	**External test equipment → All ECUs**		
Message Type:	**Request**		
Data Byte	**Description (all values are in hexadecimal)**	**Byte Value (Hex)**	**Mnemonic**
#1	Request emission-related DTCs request SID	03	SIDRQ

TABLE 144—REQUEST EMISSION-RELATED DIAGNOSTIC TROUBLE CODES RESPONSE MESSAGES

Message direction:	**ECU #1 → External test equipment**		
Message Type:	**Response**		
Data Byte	**Description (all values are in hexadecimal)**	**Byte Value (Hex)**	**Mnemonic**
#1	Request emission-related DTCs response SID	43	SIDRQ
#2	# of DTC {number of emission-related DTCs stored in this ECU}	06	#OFDTC
#2	DTC High Byte of P0143	01	DTC1HI
#3	DTC Low Byte of P0143	43	DTC1LO
#4	DTC High Byte of P0196	01	DTC2HI
#5	DTC Low Byte of P0196	96	DTC2LO
#6	DTC High Byte of P0234	02	DTC3HI
#7	DTC Low Byte of P0234	34	DTC3LO
#8	DTC High Byte of P02CD	02	DTC4HI
#9	DTC Low Byte of P02CD	CD	DTC4LO
#10	DTC High Byte of P0357	03	DTC5HI
#11	DTC Low Byte of P0357	57	DTC5LO
#12	DTC High Byte of P0A24	0A	DTC6HI
#13	DTC Low Byte of P0A24	24	DTC6LO

Downloaded from SAE International by Tara Casaletto, Monday, January 09, 2023

TABLE 145—REQUEST EMISSION-RELATED DIAGNOSTIC TROUBLE CODES RESPONSE MESSAGE

Message direction:	ECU #3 → External test equipment		
Message Type:	Response		
Data Byte	**Description (all values are in hexadecimal)**	**Byte Value (Hex)**	**Mnemonic**
#1	Request emission-related DTCs response SID	43	SIDRQ
#2	# of DTC {number of emission-related DTCs stored in this ECU}	00	#OFDTC

TABLE 146—REQUEST EMISSION-RELATED DIAGNOSTIC TROUBLE CODES RESPONSE MESSAGE

Message direction:	ECU #2 → External test equipment		
Message Type:	Response		
Data Byte	**Description (all values are in hexadecimal)**	**Byte Value (Hex)**	**Mnemonic**
#1	Request emission-related DTCs response SID	43	SIDPR
#2	# of DTC {number of emission-related DTCs stored in this ECU}	01	#OFDTC
#3	DTC High Byte of P0443	04	DTC1HI
#4	DTC Low Byte of P0443	43	DTC1LO

6.4 Service $04 - Clear/Reset Emission-Related Diagnostic Information

6.4.1 FUNCTIONAL DESCRIPTION—The purpose of this service is to provide a means for the external test equipment to command ECUs to clear all emission-related diagnostic information. This includes:

- Number of diagnostic trouble codes (can be read with Service $01, PID $01)
- Diagnostic trouble codes (can be read with Service $03)
- Trouble code for freeze frame data (can be read with Service $02, PID $02)
- Freeze frame data (can be read with Service $02)
- Status of system monitoring tests (can be read with Service $01, PID $01)
- On-board monitoring test results (can be read with Services $06 and $07)
- Distance travelled while MIL is activated (can be read with Service $01, PID $21)
- Number of warm-ups since DTC cleared (can be read with Service $01, PID $30)
- Distance since diagnostic trouble codes cleared (can be read with Service $01, PID $31)
- Minutes run by the engine while MIL activated (can be read with Service $01, PID $4D)
- Time since diagnostic trouble codes cleared (can be read with Service $01, PID $4E)

Other manufacturer specific “clearing/resetting” actions may also occur in response to this request message. All ECUs shall respond to this request message with ignition ON and with the engine not running.

For safety and/or technical design reasons, ECUs that can not perform this operation under other conditions, such as with the engine running shall send a negative response message with response code $22 - conditionsNotCorrect.

6.4.2 MESSAGE DATA BYTES

6.4.2.1 Clear/Reset Emission-Related Diagnostic Information Request Message Definition

TABLE 147—CLEAR/RESET EMISSION-RELATED DIAGNOSTIC INFORMATION REQUEST MESSAGE

Data Byte	Parameter Name	Cvt	Hex Value	Mnemonic
#1	**Clear/reset emission-related diagnostic information request SID**	**M**	**04**	**SIDRQ**

Downloaded from SAE International by Tara Casaletto, Monday, January 09, 2023

6.4.2.2 Clear/Reset Emission-Related Diagnostic Information Response Message Definition

TABLE 148—CLEAR/RESET EMISSION-RELATED DIAGNOSTIC INFORMATION RESPONSE MESSAGE

Data Byte	Parameter Name	Cvt	Hex Value	Mnemonic
#1	Clear/reset emission-related diagnostic information response SID	M	44	SIDPR

6.4.3 PARAMETER DEFINITION—This service does not support any parameters.

6.4.4 MESSAGE EXAMPLE—The example below shows how the "Clear/reset emission-related diagnostic information" service shall be implemented if ignition is ON and with the engine not running.

The external test equipment commands the vehicle to Clear/reset emission-related diagnostic information.

TABLE 149—CLEAR/RESET EMISSION-RELATED DIAGNOSTIC INFORMATION REQUEST MESSAGE

Message direction:	External test equipment → All ECUs		
Message Type:	Request		
Data Byte	**Description (all values are in hexadecimal)**	**Byte Value (Hex)**	**Mnemonic**
#1	Clear/reset emission-related diagnostic information request SID	04	SIDRQ

TABLE 150—CLEAR/RESET EMISSION-RELATED DIAGNOSTIC INFORMATION RESPONSE MESSAGE

Message direction:	ECU#1 → External test equipment		
Message Type:	Response		
Data Byte	**Description (all values are in hexadecimal)**	**Byte Value (Hex)**	**Mnemonic**
#1	Clear/reset emission-related diagnostic information response SID	44	SIDPR

TABLE 151—CLEAR/RESET EMISSION-RELATED DIAGNOSTIC INFORMATION RESPONSE MESSAGE

Message direction:	ECU#2 → External test equipment		
Message Type:	Response		
Data Byte	**Description (all values are in hexadecimal)**	**Byte Value (Hex)**	**Mnemonic**
#1	Clear/reset emission-related diagnostic information response SID	44	SIDPR

TABLE 152—NEGATIVE RESPONSE MESSAGE

Message direction:	ECU#1 → External test equipment		
Message Type:	Response		
Data Byte	**Description (all values are in hexadecimal)**	**Byte Value (Hex)**	**Mnemonic**
#1	Negative Response Service Identifier	7F	SIDNR
#2	Clear/reset emission-related diagnostic information request SID	04	SIDRQ
#3	Negative Response Code: conditionsNotCorrect	22	NR_CNC

Downloaded from SAE International by Tara Casaletto, Monday, January 09, 2023

6.5 Service $05 - Request Oxygen Sensor Monitoring Test Results—Service $05 is not supported for CAN. The functionality of service $05 is implemented in service $06.

6.6 Service $06 - Request On-Board Monitoring Test Results for Specific Monitored Systems

6.6.1 FUNCTIONAL DESCRIPTION—The purpose of this service is to allow access to the results for on-board diagnostic monitoring tests of specific components / systems that are continuously monitored (e.g., mis-fire monitoring) and non-continuously monitored (e.g., catalyst system).

The request message for test values includes an On-Board Diagnostic Monitor ID (see Appendix D) that indicates the information requested. Unit and Scaling information is included in Appendix E.

The vehicle manufacturer is responsible for assigning “Manufacturer Defined Test IDs” for different tests of a monitored system. The latest test values (results) are to be retained, even over multiple ignition OFF cycles, until replaced by more recent test values (results). Test values (results) are requested by On-Board Diagnostic Monitor ID. Test values (results) are always reported with the Minimum and Maximum Test Limits. The Unit and Scaling ID included in the response message defines the scaling and unit to be used by the external test equipment to display the test values (results), Minimum Test Limit, and Maximum Test Limit information.

If an On-Board Diagnostic Monitor has not been completed at least once since Clear/reset emission-related diagnostic information or battery disconnect, then the parameters Test Value (Results), Minimum Test Limit, and Maximum Test Limit shall be set to zero ($00) values.

Not all On-Board Diagnostic Monitor IDs are applicable or supported by all systems. On-Board Diagnostic Monitor ID $00 is a bit-encoded value that indicates for each ECU which On-Board Diagnostic Monitor IDs are supported. On-Board Diagnostic Monitor ID $00 indicates support for On-Board Diagnostic Monitor IDs from $01 to $20. On-Board Diagnostic Monitor ID $20 indicates support for On-Board Diagnostic Monitor IDs $21 through $40, etc. This is the same concept for PIDs/TIDs/InfoTypes support in services $01, $02, $06, $08, and $09. On-Board Diagnostic Monitor ID $00 is required for those ECUs that respond to a corresponding service $06 request message as specified in Appendix A. On-Board Diagnostic Monitor ID $00 is optional for those ECUs that do not respond to additional service $06 request messages.

6.6.2 MESSAGE DATA BYTES

6.6.2.1 Request On-Board Monitoring Test Results for Specific Monitored Systems Request Message Definition (Read Supported OBDMIDs)

TABLE 153—REQUEST ON-BOARD MONITORING TEST RESULTS FOR SPECIFIC MONITORED SYSTEMS REQUEST MESSAGE (READ SUPPORTED OBDMIDs)

Data Byte	Parameter Name	Cvt	Hex Value	Mnemonic
#1	Request on-board monitoring test results for specific monitored systems request SID	M	06	SIDRQ
#2	On-Board Diagnostic Monitor ID (OBDMIDs supported: Appendix A)	M	xx	OBDMID
#3	On-Board Diagnostic Monitor ID (OBDMIDs supported: Appendix A)	U	xx	OBDMID
#4	On-Board Diagnostic Monitor ID (OBDMIDs supported: Appendix A)	U	xx	OBDMID
#5	On-Board Diagnostic Monitor ID (OBDMIDs supported: Appendix A)	U	xx	OBDMID
#6	On-Board Diagnostic Monitor ID (OBDMIDs supported: Appendix A)	U	xx	OBDMID
#7	On-Board Diagnostic Monitor ID (OBDMIDs supported: Appendix A)	U	xx	OBDMID
U = User Optional — OBDMID may be included to avoid multiple OBDMID supported request messages				

Downloaded from SAE International by Tara Casaletto, Monday, January 09, 2023

NOTE— To request OBDMIDs supported range from $C1 - $FF another request message with OBDMID#1 = $C0 and OBDMID#2 = $E0 shall be sent to the vehicle

6.6.2.2 *Request On-Board Monitoring Test Results for Specific Monitored Systems Response Message Definition (Report Supported OBDMIDs)*—ECU(s) must respond to all supported ranges if requested. A range is defined as a block of 32 OBDMIDs (e.g., range #1: OBDMID $01-$20). The ECU shall not respond to unsupported OBDMID ranges unless subsequent ranges have a supported OBDMID(s).

TABLE 154—REQUEST ON-BOARD MONITORING TEST RESULTS FOR SPECIFIC MONITORED SYSTEMS RESPONSE MESSAGE (REPORT SUPPORTED OBDMIDs)

Data Byte	Parameter Name	Cvt	Hex Value	Mnemonic
#1	**Request on-board monitoring test results for specific monitored systems response SID**	**M**	**46**	**SIDPR**
	data record of supported OBDMID = [			OBDMIDRE
#2	1st supported OBDMID	M	xx	C
#3	Data A: supported OBDMIDs,	M	xx	OBDMID
#4	Data B: supported OBDMIDs,	M	xx	DATA_A
#5	Data C: supported OBDMIDs,	M	xx	DATA_B
#6	Data D: supported OBDMIDs]	M	xx	DATA_C DATA_D
:	:	:	:	:
	data record of supported OBDMID = [			OBDMIDRE
#n-4	mth supported OBDMID	C1	xx	C
#n-3	Data A: supported OBDMIDs,	C2	xx	OBDMID
#n-2	Data B: supported OBDMIDs,	C2	xx	DATA_A
#n-1	Data C: supported OBDMIDs,	C2	xx	DATA_B
#n	Data D: supported OBDMIDs]	C2	xx	DATA_C DATA_D
C1 = Conditional — OBDMID value shall be the same value as included in the request message if supported by the ECU C2 = Conditional — value indicates OBDMIDs supported; range of supported OBDMIDs depends on selected OBDMID value (see C1)				

NOTE— The response message shall only include the OBDMID(s) and Data A - D which are supported by the ECU. If the request message includes (a) OBDMID value(s) which are not supported by the ECU those shall not be included in the response message.

6.6.2.3 *Request On-Board Monitoring Test Results for Specific Monitored Systems Request Message Definition (Read OBDMID Test Values)*

TABLE 155—REQUEST ON-BOARD MONITORING TEST RESULTS FOR SPECIFIC MONITORED SYSTEMS REQUEST MESSAGE (READ OBDMID TEST VALUES)

Data Byte	Parameter Name	Cvt	Hex Value	Mnemonic
#1	**Request on-board monitoring test results for specific monitored systems request SID**	**M**	**06**	**SIDRQ**
#2	On-Board Diagnostic Monitor ID	M	xx	OBDMID

Downloaded from SAE International by Tara Casaletto, Monday, January 09, 2023

6.6.2.4 Request On-Board Monitoring Test Results for Specific Monitored Systems Response Message Definition (Report OBDMID Test Values)

TABLE 156—REQUEST ON-BOARD MONITORING TEST RESULTS FOR SPECIFIC MONITORED SYSTEMS RESPONSE MESSAGE (REPORT OBDMID TEST VALUES)

Data Byte	Parameter Name	Cvt	Hex Value	Mnemonic
#1	**Request on-board monitoring test results for specific monitored systems response SID**	**M**	**46**	**SIDPR**
	data record of supported OBDMID = [			OBDMIDREC
#2	On-Board Diagnostic Monitor ID	M	xx	
#3	Std./Manuf. Defined TID#1	M	xx	OBDMID
#4	Unit And Scaling ID#1	M	xx	S/MDTID
#5	Test Value (High Byte)#1	M	xx	UASID
#6	Test Value (Low Byte)#1	M	xx	TVHI
#7	Min. Test Limit (High Byte)#1	M	xx	TVLO
#8	Min. Test Limit (Low Byte)#1	M	xx	MINTLHI
#9	Max. Test Limit (High Byte)#1	M	xx	MINTLLO
#10	Max. Test Limit (Low Byte)#1]	M	xx	MAXTLHI MAXTLLO
:	:	:	:	:
	data record of supported OBDMID = [			OBDMIDREC
#n-8	On-Board Diagnostic Monitor ID	C1	xx	
#n-7	Std./Manuf. Defined TID#m	C2	xx	OBDMID
#n-6	Unit And Scaling ID#m	C2	xx	S/MDTID
#n-5	Test Value (High Byte)#m	C2	xx	UASID
#n-4	Test Value (Low Byte)#m	C2	xx	TVHI
#n-3	Min. Test Limit (High Byte)#m	C2	xx	TVLO
#n-2	Min. Test Limit (Low Byte)#m	C2	xx	MINTLHI
#n-1	Max. Test Limit (High Byte)#m	C2	xx	MINTLLO
#n	Max. Test Limit (Low Byte)#m]	C2	xx	MAXTLHI MAXTLLO

C1 = Conditional — parameter is only present if more than one (1) Manufacturer Defined TID is supported by the ECU for the requested Monitor ID.
C2 = Conditional — parameter and value depends on selected Manufacturer Defined TID number and are only included if the Manufacturer Defined TID is supported by the ECU. The value shall be zero ($00) in case the On-Board Diagnostic Monitor has not been completed at least once since Clear/reset emission-related diagnostic information or battery disconnect.

6.6.3 PARAMETER DEFINITION

6.6.3.1 On-Board Diagnostic Monitor IDs Supported—The On-Board Diagnostic Monitor IDs supported is the same concept as used for PID support in services $01 and $02 as specified in Appendix A.

6.6.3.2 On-Board Diagnostic Monitor ID Description—The On-Board Diagnostic Monitor ID is a one (1) byte parameter and is defined in Appendix A. An On-Board Diagnostic Monitor may have more than one (1) monitor test (Test ID).

NOTE— The On-Board Diagnostic Monitor ID is similar to the Test ID parameter specified in service $06 in Section 6.6.3.1.

6.6.3.3 Standardized and Manufacturer Defined Test ID Description—The Standardized and Manufacturer Defined Test ID is a one (1) byte parameter. For example, the On-Board Diagnostic Monitor “Oxygen Sensor Monitor Bank 1 - Sensor 1” may have the following Standardized Test ID:

The table below specifies the range of identifiers.

Downloaded from SAE International by Tara Casaletto, Monday, January 09, 2023

TABLE 157—STANDARDIZED TEST ID DESCRIPTION

Range (Hex)	Description
00	Reserved by document
01	Rich to lean sensor threshold voltage (constant)
02	Lean to rich sensor threshold voltage (constant)
03	Low sensor voltage for switch time calculation (constant)
04	High sensor voltage for switch time calculation (constant)
05	Rich to lean sensor switch time (calculated)
06	Lean to rich sensor switch time (calculated)
07	Minimum sensor voltage for test cycle (calculated)
08	Maximum sensor voltage for test cycle (calculated)
09	Time between sensor transitions (calculated)
0A	Sensor period (calculated)
0B	EWMA (Exponential Weighted Moving Average) misfire counts for last 10 driving cycles (calculated) Calculation: 0.1 * (current counts) + 0.9 * (previous average) Initial value for (previous average) = 0 This TEST ID shall be reported with OBD Monitor IDs A2 – AD (refer to Appendix D) and the Scaling ID 24 (refer to Appendix E).
0C	Misfire counts for last/current driving cycles (calculated)
0D - 7F	Reserved for future standardisation

TABLE 158—MANUFACTURER DEFINED TEST ID DESCRIPTION

Range (Hex)	Description
80 - FE	Manufacturer Defined Test ID range - this parameter is an identifier for the test performed within the On-Board Diagnostic Monitor.
FF	Reserved by document

Results of latest mandated on-board oxygen sensor monitoring tests, see figure below.

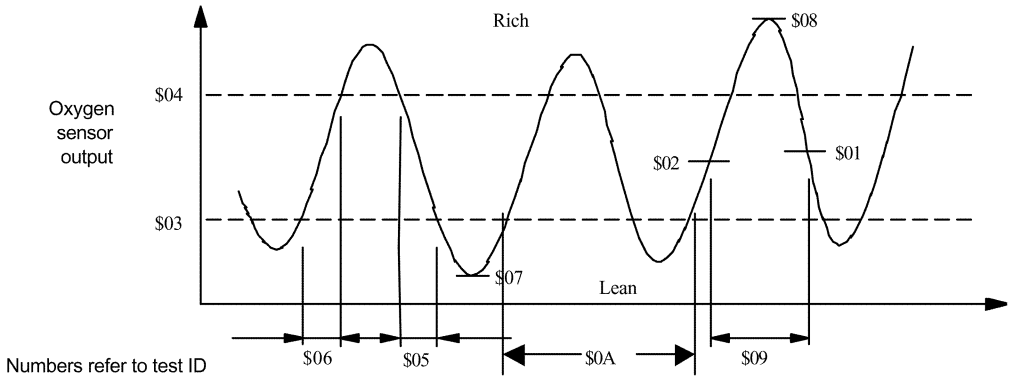

FIGURE 15—STANDARDIZED TEST ID VALUE EXAMPLE

Downloaded from SAE International by Tara Casaletto, Monday, January 09, 2023

6.6.3.4 *Unit and Scaling ID Definition*—The Unit and Scaling ID is a one (1) byte identifier to reference the scaling and unit to be used by the external test equipment to calculate and display the test values (results), Minimum Test Limit, and the Maximum Test Limit for the Standardized and Manufacturer Defined Test ID requested. All standardized Unit and Scaling IDs are specified in “Appendix E” of this document

6.6.3.5 *Test Value (Result) Description*—The Test Value represents the test result and is defined in the table below.

TABLE 159—TEST VALUE DESCRIPTION

Parameter name	# of bytes	Description
Test Value	2 (High and Low Byte)	Test Value (Result) - this value shall be calculated and displayed by the external test equipment based on the Unit and Scaling ID included in the response message. The Test Value shall be within the Minimum and Maximum Test Limit to indicate a "Pass" result.

6.6.3.6 *Minimum Test Limit Description*—The Minimum Test Limit parameter is defined in the table below.

TABLE 160—MINIMUM TEST LIMIT DESCRIPTION

Parameter name	# of bytes	Description
Minimum Test Limit	2 (High and Low Byte)	The Minimum Test Limit shall be calculated and displayed by the external test equipment based on the Unit and Scaling ID included in the response message. The Unit and Scaling IDs are specified in Appendix E of this document. The Minimum Test Limit shall be the minimum value for the monitor identified by the On-Board Diagnostic Monitor ID. For the Standardized Test IDs which are constant values the Minimum Test Limit shall be the same value as reported for the Test Value. The following conditions apply: — if the Test Value is less than the Minimum Test Value results in a "Fail" condition, — if the Test Value equals the Minimum Test Value results in a "Pass" condition, — if the Test Value is greater than the Minimum Test Value results in a "Pass" condition.

6.6.3.7 *Maximum Test Limit description*—The Maximum Test Limit parameter is defined in the table below.

TABLE 161—MAXIMUM TEST LIMIT DESCRIPTION

Parameter name	# of bytes	Description
Maximum Test Limit	2 (High and Low Byte)	The Maximum Test Limit shall be calculated and displayed by the external test equipment based on the Unit and Scaling ID included in the response message. The Unit and Scaling IDs are specified in Appendix E of this document. The Maximum Test Limit shall be the maximum value for the monitor identified by the On-Board Diagnostic Monitor ID. For the Standardized Test IDs which are constant values the Maximum Test Limit shall be the same value as reported for the Test Value. The following conditions apply: — if the Test Value is less than the Maximum Test Value results in a "Pass" condition, — if the Test Value equals the Maximum Test Value results in a "Pass" condition, — if the Test Value is greater than the Maximum Test Value results in a "Fail" condition.

Downloaded from SAE International by Tara Casaletto, Monday, January 09, 2023

6.6.4 MESSAGE EXAMPLE—The example below shows how the "Request on-board monitoring test results for specific monitored systems" service shall be implemented.

6.6.4.1 Step #1: Request On-Board Monitoring Test Results for Specific Nonitored Systems (Request for Supported OBDMIDs)—The external test equipment requests all supported OBDMIDs from the vehicle. Refer to the example of service $01 how to request supported PIDs (same concept is used for supported OBDMIDs).

As a result of the supported OBDMID request the external test equipment creates an internal list of supported OBDMIDs for each ECU: The ECU #1 (ECM) supports OBDMIDs $01, $05, $11, and $21. The ECU #2 (TCM) does not support any OBDMIDs.

6.6.4.2 Step #2: Request Current Powertrain Diagnostic Data (Service $01, PID $01)—Prior to requesting OBD Monitor test results the external test equipment shall evaluate if the monitor is complete. The status of the monitor is included in the response message of service $01, PID $01 data byte B - D (see Appendix B).

6.6.4.3 Step #3: Request On-Board Monitoring Test Results for Specific Monitored Systems—The external test equipment sends a "Request on-board monitoring test results for specific monitored systems" message with one supported OBDMID in the request message to the vehicle. In this example the request message includes the following OBDMID:

— request message: OBDMID $01 - Oxygen Sensor Monitor Bank 1 - Sensor 1

TABLE 162—REQUEST OXYGEN SENSOR MONITORING TEST RESULTS REQUEST MESSAGE

Message direction:	**External test equipment → All ECUs**		
Message Type:	**Request**		
Data Byte	**Description (all values are in hexadecimal)**	**Byte Value (Hex)**	**Mnemonic**
#1	Request on-board monitoring test results for specific monitored systems request SID	06	SIDRQ
#2	OBDMID: 01 - Oxygen Sensor Monitor Bank 1 - Sensor 1	01	OBDMID

Downloaded from SAE International by Tara Casaletto, Monday, January 09, 2023

TABLE 163—REQUEST OXYGEN SENSOR MONITORING TEST RESULTS RESPONSE MESSAGE

Message direction:	ECU #1 → External test equipment		
Message Type:	Response		
Data Byte	**Description (all values are in hexadecimal)**	**Byte Value (Hex)**	**Mnemonic**
#1	Request on-board monitoring test results for specific monitored systems response SID	46	SIDPRQ
#2	OBDMID: 01 - Oxygen Sensor Monitor Bank 1 - Sensor 1	01	OBDMID
#3	Standardised Test ID: 01 - Rich to lean sensor threshold voltage (constant)	01	STID
#4	Unit And Scaling ID: Voltage	0A	UASID
#5	Test Value High Byte:	06	TESTVAL
#6	Test Value Low Byte: 0.365 V	60	TESTVAL
#7	Minimum Test Limit High Byte:	06	MINLIMIT
#8	Minimum Test Limit Low Byte: 0.365 V	60	MINLIMIT
#9	Maximum Test Limit High Byte:	06	MAXLIMIT
#10	Maximum Test Limit Low Byte: 0.365 V	60	MAXLIMIT
#11	OBDMID: 01 - Oxygen Sensor Monitor Bank 1 - Sensor 1	01	OBDMID
#12	Standardized Test ID: 05 - Rich to lean sensor switch time (calculated)	05	STID
#13	Unit And Scaling ID: Time	10	UASID
#14	Test Value High Byte	00	TESTVAL
#15	Test Value Low Byte: 0.072 s (0 min, 0 s)	48	TESTVAL
#16	Minimum Test Limit High Byte	00	MINLIMIT
#17	Minimum Test Limit Low Byte: 0.000 s (0 min, 0 s)	00	MINLIMIT
#18	Maximum Test Limit High Byte	00	MAXLIMIT
#19	Maximum Test Limit Low Byte: 0.100 s (0 min, 0 s)	64	MAXLIMIT
#20	OBDMID: 01 - Oxygen Sensor Monitor Bank 1 - Sensor 1	01	OBDMID
#21	Manufacturer Defined Test ID: 133 - the name of this Test ID shall be documented in the vehicle Service Information!	85	MDTID
#22	Unit And Scaling ID: Counts	24	UASID
#23	Test Value High Byte	00	TESTVAL
#24	Test Value Low Byte: 150 counts	96	TESTVAL
#25	Minimum Test Limit High Byte	00	MINLIMIT
#26	Minimum Test Limit Low Byte: 75 counts	4B	MINLIMIT
#27	Maximum Test Limit High Byte	FF	MAXLIMIT
#28	Maximum Test Limit Low Byte: 65535 counts	FF	MAXLIMIT

NOTE— ECU#2 does not support any Test IDs and therefore does not send a response message.

Downloaded from SAE International by Tara Casaletto, Monday, January 09, 2023

6.6.4.4 Request On-Board Monitoring Test Results for Specific Monitored Systems—In this example the requested monitor has not been completed once. The request message includes the following OBDMID:

— request message: OBDMID $21 - Catalyst Monitor Bank 1

TABLE 164—REQUEST CATALYST MONITOR BANK 1 MONITORING TEST RESULTS REQUEST MESSAGE

Message direction:	**External test equipment → All ECUs**		
Message Type:	**Request**		
Data Byte	**Description (all values are in hexadecimal)**	**Byte Value (Hex)**	**Mnemonic**
#1	Request on-board monitoring test results for specific monitored systems request SID	06	SIDRQ
#2	OBDMID: 21 - Catalyst Monitor Bank 1	21	OBDMID

TABLE 165—REQUEST CATALYST MONITOR BANK 1 MONITORING TEST RESULTS RESPONSE MESSAGE

Message direction:	**ECU #1 → External test equipment**		
Message Type:	**Response**		
Data Byte	**Description (all values are in hexadecimal)**	**Byte Value (Hex)**	**Mnemonic**
#1	Request on-board monitoring test results for specific monitored systems response SID	46	SIDPRQ
#2	OBDMID: 21 - Catalyst Monitor Bank 1	21	OBDMID
#3	Manufacturer Defined Test ID: 135	87	MDTID
#4	Unit And Scaling ID: Percent	2E	UASID
#5	Test Value High Byte: Monitor not completed at least once since erasure	00	TESTVAL
#6	Test Value Low Byte: 0.00 %	00	TESTVAL
#7	Minimum Test Limit High Byte	00	MINLIMIT
#8	Minimum Test Limit Low Byte: 0.00 %	00	MINLIMIT
#9	Maximum Test Limit High Byte	00	MAXLIMIT
#10	Maximum Test Limit Low Byte: 0.00%	00	MAXLIMIT

NOTE— ECU#2 does not support any Test IDs and therefore does not send a response message.

6.7 Service $07 - Request Emission-Related Diagnostic Trouble Codes Detected During Current or Last Completed Driving Cycle

6.7.1 FUNCTIONAL DESCRIPTION—The purpose of this service is to enable the external test equipment to obtain "pending" diagnostic trouble codes detected during current or last completed driving cycle for emission-related components / systems that are tested or continuously monitored during normal driving conditions. Service $07 is required for all DTCs and is independent of Service $03. The intended use of this data is to assist the service technician after a vehicle repair, and after clearing diagnostic information, by reporting test results after a single driving cycle. If the test failed during the driving cycle, the DTC associated with that test will be reported. Test results reported by this service do not necessarily indicate a faulty component / system. If test results indicate a failure after additional driving, then the MIL will be illuminated and a DTC will be set and reported with service $03, indicating a faulty component / system. This service can always be used to request the results of the latest test, independent of the setting of a DTC.

Test results for these components / systems are reported in the same format as the DTCs in Service $03 - refer to the functional description for service $03.

Downloaded from SAE International by Tara Casaletto, Monday, January 09, 2023

6.7.2 MESSAGE DATA BYTES

6.7.2.1 Request Emission-Related Diagnostic Trouble Codes Detected During Current or Last Completed Driving Cycle Request Message Definition

TABLE 166—REQUEST EMISSION-RELATED DIAGNOSTIC TROUBLE CODES DETECTED DURING CURRENT OR LAST COMPLETED DRIVING CYCLE REQUEST MESSAGE

Data Byte	Parameter Name	Cvt	Hex Value	Mnemonic
#1	**Request emission-related diagnostic trouble codes detected during current or last completed driving cycle request SID**	**M**	**07**	**SIDRQ**

6.7.2.2 Request Emission-Related Diagnostic Trouble Codes Detected During Current or Last Completed Driving Cycle Response Message Definition

TABLE 167—REQUEST EMISSION-RELATED DIAGNOSTIC TROUBLE CODES DETECTED DURING CURRENT OR LAST COMPLETED DRIVING CYCLE RESPONSE MESSAGE

Data Byte	Parameter Name	Cvt	Hex Value	Mnemonic
#1	Request emission-related diagnostic trouble codes detected during current or last completed driving cycle response SID	M	47	SIDPR
#2	# of DTC = [no emission-related DTCs # of emission-related DTCs]	M	 00 01 - FF	#OFDTC
#3 #4	DTC#1 (High Byte) DTC#1 (Low Byte)	C C	xx xx	DTC1HI DTC1LO
:	:	:	xx	
#n-1 #n	DTC#m (High Byte) DTC#m (Low Byte)	C C	xx xx	DTCmHI DTCmLO
C = Conditional — DTC#1 - DTC#m are only included if # of DTC parameter value ≠ $00				

6.7.3 PARAMETER DEFINITION—This service does not support any parameters.

6.7.4 MESSAGE EXAMPLE—Refer to message example of service $03.

6.8 Service $08 - Request Control of On-Board System, Test or Component

6.8.1 FUNCTIONAL DESCRIPTION—The purpose of this service is to enable the external test equipment to control the operation of an on-board system, test or component.

The data bytes will be specified, if necessary, for each Test ID in Appendix F, and will be unique for each Test ID.

Possible uses for these data bytes in the request message are:

— Turn on-board system/test/component ON
— Turn on-board system/test/component OFF
— Cycle on-board system/test/component for ‘n’ seconds.

Possible uses for these data bytes in the response message are:

— Report system status
— Report test results

Downloaded from SAE International by Tara Casaletto, Monday, January 09, 2023

Not all TIDs are applicable or supported by all systems. TID $00 is a bit-encoded value that indicates for each ECU which TIDs are supported. TID $00 indicates support for TIDs from $01 to $20. TID $20 indicates support for TIDs $21 through $40, etc. This is the same concept for PIDs/TIDs/InfoTypes support in services $01, $02, $06, $08, $09. TID $00 is required for those ECUs that respond to a corresponding service $08 request message as specified in Appendix A. TID $00 is optional for those ECUs that do not respond to additional service $08 request messages.

The order of the TIDs in the response message is not required to match the order in the request message.

6.8.2 MESSAGE DATA BYTES

6.8.2.1 Request Control of On-Board Device Request Message Definition (Read Supported TIDs)

TABLE 168—REQUEST CONTROL OF ON-BOARD DEVICE REQUEST MESSAGE (READ SUPPORTED TIDS)

Data Byte	Parameter Name	Cvt	Hex Value	Mnemonic
#1	**Request control of on-board device request SID**	**M**	**08**	**SIDRQ**
#2	TID#1 (Test IDs supported: Appendix A)	M	xx	TID
#3	TID#2 (Test IDs supported: Appendix A)	U	xx	TID
#4	TID#3 (Test IDs supported: Appendix A)	U	xx	TID
#5	TID#4 (Test IDs supported: Appendix A)	U	xx	TID
#6	TID#5 (Test IDs supported: Appendix A)	U	xx	TID
#7	TID#6 (Test IDs supported: Appendix A)	U	xx	TID
U = User Optional — TID may be included to avoid multiple TID supported request messages				

NOTE— To request TIDs supported range from $C1 - $FF another request message with TID#1 = $C0 and TID#2 = $E0 shall be sent to the vehicle

6.8.2.2 Request Control of On-Board Device Response Message Definition (Report Supported TIDs)—ECU(s) must respond to all supported ranges if requested. A range is defined as a block of 32 TIDs (e.g., range #1: TID $01-$20). The ECU shall not respond to unsupported TID ranges unless subsequent ranges have a supported TID(s).

TABLE 169—REQUEST CONTROL OF ON-BOARD DEVICE RESPONSE MESSAGE (REPORT SUPPORTED TIDS)

Data Byte	Parameter Name	Cvt	Hex Value	Mnemonic
#1	**Request control of on-board device response message SID**	**M**	**48**	**SIDPR**
	data record of supported TIDs = [			TIDREC_
#2	1st supported TID	M	xx	TID
#3	Data A: supported TIDs,	M	xx	DATA_A
#4	Data B: supported TIDs,	M	xx	DATA_B
#5	Data C: supported TIDs,	M	xx	DATA_C
#6	Data D: supported TIDs]	M	xx	DATA_D
:	:	:	:	:
	data record of supported TIDs = [			TIDREC_
#n-4	mth supported TID	C1	xx	TID
#n-3	Data A: supported TIDs,	C2	xx	DATA_A
#n-2	Data B: supported TIDs,	C2	xx	DATA_B
#n-1	Data C: supported TIDs,	C2	xx	DATA_C
#n	Data D: supported TIDs]	C2	xx	DATA_D
C1 = Conditional — TID value shall be the same value as included in the request message if supported by the ECU C2 = Conditional — value indicates TIDs supported; range of supported TIDs depends on selected TID value (see C1)				

Downloaded from SAE International by Tara Casaletto, Monday, January 09, 2023

NOTE— The response message shall only include the TID(s) and Data A - D which are supported by the ECU. If the request message includes (a) TID value(s) which are not supported by the ECU those shall not be included in the response message.

6.8.2.3 Request Control of On-Board System Request Message Definition (Read TID Values)

TABLE 170—REQUEST CONTROL OF ON-BOARD DEVICE REQUEST MESSAGE (READ TID VALUES)

Data Byte	Parameter Name	Cvt	Hex Value	Mnemonic
#1	**Request control of on-board device request SID**	**M**	**08**	**SIDRQ**
	data record of Test ID = [			TIDREC
#2	Test ID (request Test ID values)	M/C1	xx	TID
#3	Data A,	C2	xx	DATA_A
#4	Data B,	C2	xx	DATA_B
#5	Data C,	C2	xx	DATA_C
#6	Data D,	C2	xx	DATA_D
#7	Data E]	C2	xx	DATA_E
C1 = Conditional — Test ID value shall be one of the supported Test IDs of previous response message C2 = Conditional — presence and values of Data A - E parameter depend on Test ID				

6.8.2.4 Request Control of On-Board Device Response Message Definition (Report TID Values)

TABLE 171—REQUEST CONTROL OF ON-BOARD DEVICE RESPONSE MESSAGE (REPORT TID VALUES)

Data Byte	Parameter Name	Cvt	Hex Value	Mnemonic
#1	**Request control of on-board device response SID**	**M**	**48**	**SIDPR**
	data record of Test ID = [			TIDREC
#2	Test ID (report Test ID values)	M/C1	xx	TID
#3	Data A,	C2	xx	DATA_A
#4	Data B,	C2	xx	DATA_B
#5	Data C,	C2	xx	DATA_C
#6	Data D,	C2	xx	DATA_D
#7	Data E]	C2	xx	DATA_E
C1 = Conditional — Test ID value shall be the same value as included in the request message C2 = Conditional — presence and values of Data A - E parameter depend on Test ID				

6.8.3 PARAMETER DEFINITION

6.8.3.1 Test IDs Supported—Refer to Appendix A.

6.8.3.2 Test ID Description—Refer to Appendix F.

6.8.4 MESSAGE EXAMPLE—The example below shows how “Request control of on-board system, test or component” service shall be implemented.

6.8.4.1 Step #1: Request Control of On-Board System, Test or Component (Request for Supported Test IDs)— The external test equipment requests all supported Test IDs from the vehicle. Refer to the example of service $01 how to request supported PIDs (same concept is used for supported TIDs).

As a result of the supported TID request the external test equipment creates an internal list of supported PIDs for each ECU: The ECU #1 (ECM) supports Test ID $01. The ECU #2 (TCM) does not support any Test IDs and therefore does not send a response message.

Downloaded from SAE International by Tara Casaletto, Monday, January 09, 2023

6.8.4.2 *Step #2: Request Control of On-Board Device (Service $08, Test ID $01)*—The external test equipment sends a "Request control of on-board device" message with one (1) supported Test ID $01 to the vehicle.

TABLE 172—REQUEST CONTROL OF ON-BOARD DEVICE REQUEST MESSAGE

Message direction:	External test equipment → All ECUs		
Message Type:	Request		
Data Byte	**Description (all values are in hexadecimal)**	**Byte Value (Hex)**	**Mnemonic**
#1	Request control of on-board device request SID	08	SIDRQ
#2	Test ID: 01 - Evaporative system leak test	01	TID

TABLE 173—REQUEST CONTROL OF ON-BOARD DEVICE RESPONSE MESSAGE

Message direction:	ECU #1 → External test equipment		
Message Type:	Response		
Data Byte	**Description (all values are in hexadecimal)**	**Byte Value (Hex)**	**Mnemonic**
#1	Request control of on-board device response SID	48	SIDPR
#2	Test ID: 01 - Evaporative system leak test	01	TID

In the following example the conditions of the system are not proper to run the Evaporative system leak test. Therefore the ECM (ECU #1) responds with a negative response message with response code $22 - conditionsNotCorrect. The TCM (ECU #2) does not respond because it previously reported that it does not support the Evaporative system leak test.

TABLE 174—REQUEST CONTROL OF ON-BOARD DEVICE REQUEST MESSAGE

Message direction:	External test equipment → All ECUs		
Message Type:	Request		
Data Byte	**Description (all values are in hexadecimal)**	**Byte Value (Hex)**	**Mnemonic**
#1	Request control of on-board device request SID	08	SIDRQ
#2	Test ID: 01 - Evaporative system leak test	01	TID

TABLE 175—NEGATIVE RESPONSE MESSAGE

Message direction:	ECU#1 → External test equipment		
Message Type:	Response		
Data Byte	**Description (all values are in hexadecimal)**	**Byte Value (Hex)**	**Mnemonic**
#1	Negative Response Service Identifier	7F	SIDNR
#2	Request control of on-board device request SID	08	SIDRQ
#3	Negative Response Code: conditionsNotCorrect	22	NR_CNC

Downloaded from SAE International by Tara Casaletto, Monday, January 09, 2023

6.9 Service $09 - Request Vehicle Information

6.9.1 FUNCTIONAL DESCRIPTION—The purpose of this service is to enable the external test equipment to request vehicle specific vehicle information such as Vehicle Identification Number (VIN) and Calibration IDs. Some of this information may be required by regulations and some may be desirable to be reported in a standard format if supported by the vehicle manufacturer.

Not all Infotypes are applicable or supported by all systems. Infotype $00 is a bit-encoded value that indicates for each ECU which Infotypes are supported. Infotype $00 indicates support for Infotypes from $01 to $20. Infotype $20 indicates support for Infotypes $21 through $40, etc. This is the same concept for PIDs/TIDs/Infotypes support in services $01, $02, $06, $08, $09. Infotype $00 is required for those ECUs that respond to a corresponding service $09 request message as specified in Appendix A. Infotype $00 is optional for those ECUs that do not respond to additional service $09 request messages.

6.9.2 MESSAGE DATA BYTES

6.9.2.1 Request Vehicle Information Request Message Definition (Request Supported InfoType)

TABLE 176—REQUEST VEHICLE INFORMATION REQUEST MESSAGE (REQUEST SUPPORTED INFO TYPE)

Data Byte	Parameter Name	Cvt	Hex Value	Mnemonic
#1	**Request vehicle information request SID**	**M**	**09**	**SIDRQ**
#2	InfoType#1 (InfoTypes supported: Appendix A)	M	xx	INFTYP
#3	InfoType#2 (InfoTypes supported: Appendix A)	U	xx	INFTYP
#4	InfoType#3 (InfoTypes supported: Appendix A)	U	xx	INFTYP
#5	InfoType#4 (InfoTypes supported: Appendix A)	U	xx	INFTYP
#6	InfoType#5 (InfoTypes supported: Appendix A)	U	xx	INFTYP
#7	InfoType#6 (InfoTypes supported: Appendix A)	U	xx	INFTYP
U = User Optional — InfoType may be included to avoid multiple InfoType supported request messages				

NOTE— To request InfoTypes supported range from $C1 - $FF another request message with InfoType#1 = $C0 and InfoType#2 = $E0 shall be sent to the vehicle

Downloaded from SAE International by Tara Casaletto, Monday, January 09, 2023

6.9.2.2 Request Vehicle Information Response Message Definition (Report Supported InfoType)—ECU(s) must respond to all supported ranges if requested. A range is defined as a block of 32 InfoTypes (e.g., range #1: InfoType $01-$20). The ECU shall not respond to unsupported InfoType ranges unless subsequent ranges have a supported InfoType(s).

TABLE 177—REQUEST VEHICLE INFORMATION RESPONSE MESSAGE (REPORT SUPPORTED INFO TYPE)

Data Byte	Parameter Name	Cvt	Hex Value	Mnemonic
#1	**Request vehicle information response SID**	**M**	**49**	**SIDPR**
	data record of supported InfoTypes = [			INFTYPREC
#2	1st supported InfoType	M	xx	INFTYP
#3	Data A: supported InfoTypes,	M	xx	DATA_A
#4	Data B: supported InfoTypes,	M	xx	DATA_B
#5	Data C: supported InfoTypes,	M	xx	DATA_C
#6	Data D: supported InfoTypes]	M	xx	DATA_D
:	:	:	:	:
	data record of supported InfoTypes = [			INFTYPREC
#n-4	mth supported InfoType	C1	xx	INFTYP
#n-3	Data A: supported InfoTypes,	C2	xx	DATA_A
#n-2	Data B: supported InfoTypes,	C2	xx	DATA_B
#n-1	Data C: supported InfoTypes,	C2	xx	DATA_C
#n	Data D: supported InfoTypes]	C2	xx	DATA_D
C1 = Conditional — INFOTYPE value shall be the same value as included in the request message if supported by the ECU C2 = Conditional — value indicates INFOTYPEs supported; range of supported INFOTYPEs depends on selected INFOTYPE value (see C1)				

NOTE— The response message shall only include the INFOTYPEs and Data A - D which are supported by the ECU. If the request message includes (a) INFOTYPE value(s) which are not supported by the ECU those shall not be included in the response message.

6.9.2.3 Request Vehicle Information Request Message Definition (Read InfoType Values)

TABLE 178—REQUEST VEHCLE INFORMATION REQUEST MESSAGE (READ INFO TYPE VALUES)

Data Byte	Parameter Name	Cvt	Hex Value	Mnemonic
#1	**Request vehicle information request SID**	**M**	**09**	**SIDRQ**
#2	InfoType (read InfoType values)	M	xx	INFTYP

6.9.2.4 Request Vehicle Information Response Message Definition (report InfoType values)—

TABLE 179—REQUEST VEHICLE INFORMATION RESPONSE MESSAGE (REPORT INFO TYPE VALUES)

Data Byte	Parameter Name	Cvt	Hex Value	Mnemonic
#1	**Request vehicle information response SID**	**M**	**49**	**SIDPR**
	data record of InfoType = [			INFTYPREC
#2	InfoType (report InfoType values)	M/C1	xx	INFTYP
#3	NOfDataItems	M/C1	xx	NODI
#4	data #1,	M/C2	xx	DATA_#1
#5	data #2,	C2	xx	DATA_#2
:	:	C2	xx	:
#m	data #m]	C2	xx	DATA_#m
C1 = Conditional — InfoType value shall be the same value as included in the request message C2 = Conditional — data #1 - #m depend on selected InfoType value				

Downloaded from SAE International by Tara Casaletto, Monday, January 09, 2023

6.9.3 PARAMETER DEFINITION

6.9.3.1 Vehicle Information Types Supported—Refer to Appendix A.

6.9.3.2 Vehicle Information Type Description—Refer to Appendix G.

6.9.3.3 Number of Data Items Data Byte Description—This parameter defines the number of data items included in the response message which are identified and belong to the InfoType reported. For example, a request message with the InfoType for CVN (Calibration Verification Number) may cause the ECU to send a response message which contains multiple CVNs. The amount of CVNs is included in the "Number of data items" parameter.

6.9.4 MESSAGE EXAMPLE—The example below shows how the "Request vehicle information" service shall be implemented.

6.9.4.1 Step #1: Request Vehicle Information (Request Supported InfoType) from Vehicle—The external test equipment requests all supported InfoTypes (InfoType#1 = $00) from the vehicle. The ECU #1 (ECM) and the ECU #2 (TCM) send a response message with InfoTypes supported information for InfoTypes $01 - $20.

Now the external test equipment creates an internal list of supported InfoTypes for each ECU. The ECU #1 (ECM) supports the following InfoTypes: $02, $04, $06, and $08. The ECU #2 (TCM) supports InfoTypes: $04 and $06.

6.9.4.2 Step #2: Request InfoTypes from Vehicle—Now the external test equipment requests a combination of three (3) InfoTypes:

— InfoType $02: VIN = [1G1JC5444R7252367] supported by ECU #1
— InfoType $04: Cal. ID#1 = [JMB*36761500] supported by ECU #1
— InfoType $04: Cal. ID#2 = [JMB*47872611] supported by ECU #1
— InfoType $06: Cal. CVN#1 = [1791BC82] supported by ECU #1
— InfoType $06: Cal. CVN#2 = [16E062BE] supported by ECU #1
— InfoType $08: IPT = [04000D09 ... 00440061] supported by ECU #1
— InfoType $04: Cal. ID = [JMA*431299110000] supported by ECU #2
— InfoType $06: Cal. CVN = [98123476] supported by ECU #2

TABLE 180—REQUEST VEHICLE INFORMATION REQUEST MESSAGE

Message direction:	**External test equipment → All ECUs**		
Message Type:	**Request**		
Data Byte	**Description (all values are in hexadecimal)**	**Byte Value (Hex)**	**Mnemonic**
#1	Request vehicle information request SID	09	SIDRQ
#2	InfoType: 02 - VIN (Vehicle Identification Number)	02	INFTYP

Downloaded from SAE International by Tara Casaletto, Monday, January 09, 2023

TABLE 181—REQUEST VEHICLE INFORMATION RESPONSE MESSAGE

Message direction:	ECU #1 → External test equipment		
Message Type:	Response		
Data Byte	**Description (all values are in hexadecimal)**	**Byte Value (Hex)**	**Mnemonic**
#1	Request vehicle information response SID	49	SIDPR
#2	InfoType: 02 - VIN (Vehicle Information Number)	02	INFTYP
#3	Number of data items: 01	01	NODI
#4	1st ASCII character of VIN: ‘1’	31	VIN
#5	2nd ASCII character of VIN: ‘G’	47	VIN
#6	3rd ASCII character of VIN: ‘1’	31	VIN
#7	4th ASCII character of VIN: ‘J’	4A	VIN
#8	5th ASCII character of VIN: ‘C’	43	VIN
#9	6th ASCII character of VIN: ‘5’	35	VIN
#10	7th ASCII character of VIN: ‘4’	34	VIN
#11	8th ASCII character of VIN: ‘4’	34	VIN
#12	9th ASCII character of VIN: ‘4’	34	VIN
#13	10th ASCII character of VIN: ‘R’	52	VIN
#14	11th ASCII character of VIN: ‘7’	37	VIN
#15	12th ASCII character of VIN: ‘2’	32	VIN
#16	13th ASCII character of VIN: ‘5’	35	VIN
#17	14th ASCII character of VIN: ‘2’	32	VIN
#18	15th ASCII character of VIN: ‘3’	33	VIN
#19	16th ASCII character of VIN: ‘6’	36	VIN
#20	17th ASCII character of VIN: ‘7’	37	VIN

Now the external test equipment requests the following InfoType:

— InfoType $04: CALID#1 = [JMB*36761500] and CALID#2 =[JMB*47872611]; supported by ECU#1;

TABLE 182—REQUEST VEHICLE INFORMATION REQUEST MESSAGE

Message direction:	External test equipment → All ECUs		
Message Type:	Request		
Data Byte	**Description (all values are in hexadecimal)**	**Byte Value (Hex)**	**Mnemonic**
#1	Request vehicle information request SID	09	SIDRQ
#2	InfoType: Calibration ID	04	INFTYP

Downloaded from SAE International by Tara Casaletto, Monday, January 09, 2023

TABLE 183—REQUEST VEHICLE INFORMATION RESPONSE MESSAGE (1ST)

Message direction:	ECU#1 → External test equipment		
Message Type:	Response		
Data Byte	**Description (all values are in hexadecimal)**	**Byte Value (Hex)**	**Mnemonic**
#1	Request vehicle information response SID	49	SIDPR
#2	InfoType: Calibration ID	04	INFTYP
#3	Number of data items: 02	02	NODI
#4	Data A: ‘J’	4A	DATA_A
#5	Data B: ‘M’	4D	DATA_B
#6	Data C: ‘B’	42	DATA_C
#7	Data D: ‘*’	2A	DATA_D
#8	Data E: ‘3’	33	DATA_E
#9	Data F: ‘6’	36	DATA_F
#10	Data G: ‘7’	37	DATA_G
#11	Data H: ‘6’	36	DATA_H
#12	Data I: ‘1’	31	DATA_I
#13	Data J: ‘5’	35	DATA_J
#14	Data K: ‘0’	30	DATA_K
#15	Data L: ‘0’	30	DATA_L
#16	Data M: Fill byte	00	DATA_M
#17	Data N: Fill byte	00	DATA_N
#18	Data O: Fill byte	00	DATA_O
#19	Data O: Fill byte	00	DATA_P
#20	Data A: ‘J’	4A	DATA_A
#21	Data B: ‘M’	4D	DATA_B
#22	Data C: ‘B’	42	DATA_C
#23	Data D: ‘*’	2A	DATA_D
#24	Data E: ‘4’	34	DATA_E
#25	Data F: ‘7’	37	DATA_F
#26	Data G: ‘8’	38	DATA_G
#27	Data H: ‘7’	37	DATA_H
#28	Data I: ‘2’	32	DATA_I
#29	Data J: ‘6’	36	DATA_J
#30	Data K: ‘1’	31	DATA_K
#31	Data L: ‘1’	31	DATA_L
#32	Data M: Fill byte	00	DATA_M
#33	Data N: Fill byte	00	DATA_N
#34	Data O: Fill byte	00	DATA_O
#35	Data P: Fill byte	00	DATA_P

NOTE— The same response message with different data byte content will be sent by ECU #2 in this example.

Downloaded from SAE International by Tara Casaletto, Monday, January 09, 2023

In the following example the ECUs needs more time than $P2_{CAN}$ to calculate the Calibration Verification Number(s). Therefore both ECUs respond with negative response messages with response code $78 - RequestCorrectlyReceived-ResponsePending as long as the positive response message is not ready in the ECU.

Now the external test equipment requests the following InfoType:

— InfoType $06: CVN#1 = [17 91 BC 82] and CVN#2 = [16 E0 62 BE]; supported by ECU#1
— InfoType $06: CVN = [98 12 34 76]; supported by ECU#2

TABLE 184—REQUEST VEHICLE INFORMATION REQUEST MESSAGE

Message direction:	**External test equipment → All ECUs**		
Message Type:	**Request**		
Data Byte	**Description (all values are in hexadecimal)**	**Byte Value (Hex)**	**Mnemonic**
#1	Request vehicle information request SID	09	SIDRQ
#2	InfoType: Calibration Verification Number	06	INFTYP

TABLE 185—NEGATIVE RESPONSE MESSAGE

Message direction:	**ECU#1 → External test equipment**		
Message Type:	**Response**		
Data Byte	**Description (all values are in hexadecimal)**	**Byte Value (Hex)**	**Mnemonic**
#1	Negative Response Service Identifier	7F	SIDNR
#2	Request vehicle information request SID	09	SIDRQ
#3	Negative Response Code: RequestCorrectlyReceived-ResponsePending	78	NR_ RCR_RP

TABLE 186—NEGATIVE RESPONSE MESSAGE

Message direction:	**ECU#2 → External test equipment**		
Message Type:	**Response**		
Data Byte	**Description (all values are in hexadecimal)**	**Byte Value (Hex)**	**Mnemonic**
#1	Negative Response Service Identifier	7F	SIDNR
#2	Request vehicle information request SID	09	SIDRQ
#3	Negative Response Code: RequestCorrectlyReceived-ResponsePending	78	NR_RCR_ RP

Downloaded from SAE International by Tara Casaletto, Monday, January 09, 2023

TABLE 187—REQUEST VEHICLE INFORMATION RESPONSE MESSAGE (1ST)

Message direction:	ECU#1 → External test equipment		
Message Type:	Response		
Data Byte	**Description (all values are in hexadecimal)**	**Byte Value (Hex)**	**Mnemonic**
#1	Request vehicle information response SID	49	SIDPR
#2	InfoType: Calibration Verification Number	06	INFTYP
#3	Number of data items: 02	02	NODI
#4	Data A: 17	17	DATA_A
#5	Data B: 91	91	DATA_B
#6	Data C: BC	BC	DATA_C
#7	Data D: 82	82	DATA_D
#8	Data E: 16	16	DATA_E
#9	Data F: E0	E0	DATA_F
#10	Data G: 62	62	DATA_G
#11	Data H: BE	BE	DATA_H

TABLE 188—REQUEST VEHICLE INFORMATION RESPONSE MESSAGE (1ST)

Message direction:	ECU#2 → External test equipment		
Message Type:	Response		
Data Byte	**Description (all values are in hexadecimal)**	**Byte Value (Hex)**	**Mnemonic**
#1	Request vehicle information response SID	49	SIDPR
#2	InfoType: Calibration Verification Number	06	INFTYP
#3	Number of data items: 01	01	NODI
#4	Data A: 98	98	DATA_A
#5	Data B: 12	12	DATA_B
#6	Data C: 34	34	DATA_C
#7	Data D: 76	76	DATA_D

Now the external test equipment requests the following InfoType:

— InfoType $08: IPT; supported by ECU#1;

TABLE 189—REQUEST VEHICLE INFORMATION REQUEST MESSAGE

Message direction:	External test equipment → All ECUs		
Message Type:	Request		
Data Byte	**Description (all values are in hexadecimal)**	**Byte Value (Hex)**	**Mnemonic**
#1	Request vehicle information request SID	09	SIDRQ
#2	InfoType: In-use Performance Tracking	08	INFTYP

Downloaded from SAE International by Tara Casaletto, Monday, January 09, 2023

TABLE 190—REQUEST VEHICLE INFORMATION RESPONSE MESSAGE (1)

Message direction:	ECU#1 → External test equipment		
Message Type:	Response		
Data Byte	**Description (all values are in hexadecimal)**	**Byte Value (Hex)**	**Mnemonic**
#1	Request vehicle information response SID	49	SIDPR
#2	InfoType: In-use Performance Tracking	08	INFTYP
#3	Number of data items: 16	10	NODI
#4	OBDCOND_A: 1024 counts	04	OBDCOND_A
#5	OBDCOND_B: 1024 counts	00	OBDCOND_B
#6	IGNCNTR_A: 3337 counts	0D	IGNCNTR_A
#7	IGNCNTR_B: 3337 counts	09	IGNCNTR_B
#8	CATCOMP1_A: 824 counts	03	CATCOMP1_A
#9	CATCOMP1_B: 824 counts	38	CATCOMP1_B
#10	CATCOND1_A: 945 counts	03	CATCOND1_A
#11	CATCOND1_B: 945 counts	B1	CATCOND1_B
#12	CATCOMP2_A: 711 counts	02	CATCOMP2_A
#13	CATCOMP2_B: 711 counts	C7	CATCOMP2_B
#14	CATCOND2_A: 945 counts	03	CATCOND2_A
#15	CATCOND2_B: 945 counts	B1	CATCOND2_B
#16	O2SCOMP1_A: 737 counts	02	O2SCOMP1_A
#17	O2SCOMP1_B: 737 counts	E1	O2SCOMP1_B
#18	O2SCOND1_A: 924 counts	03	O2SCOND1_A
#19	O2SCOND1_B: 924 counts	9C	O2SCOND1_B
#20	O2SCOMP2_A: 724 counts	02	O2SCOMP2_A
#21	O2SCOMP2_B: 724 counts	D4	O2SCOMP2_B
#22	O2SCOND2_A: 833 counts	03	O2SCOND2_A
#23	O2SCOND2_B: 833 counts	41	O2SCOND2_B
#24	EGRCOMP_A: 997 counts	03	EGRCOMP_A
#25	EGRCOMP_B: 997 counts	E5	EGRCOMP_B
#26	EGRCOND_A: 1010 counts	03	EGRCOND_A
#27	EGRCOND_B: 1010 counts	F2	EGRCOND_B
#28	AIRCOMP_A: 937 counts	03	AIRCOMP_A
#29	AIRCOMP_B: 937 counts	A9	AIRCOMP_B
#30	AIRCOND_A: 973 counts	03	AIRCOND_A
#31	AIRCOND_B: 973 counts	CD	AIRCOND_B
#32	EVAPCOMP_A: 68 counts	00	EVAPCOMP_A
#33	EVAPCOMP_B: 68 counts	44	EVAPCOMP_B
#34	EVAPCOND_A: 97 counts	00	EVAPCOND_A
#35	EVAPCOND_B: 97 counts	61	EVAPCOND_B

Downloaded from SAE International by Tara Casaletto, Monday, January 09, 2023

7. *Notes*

7.1 Marginal Indicia—The change bar (I) located in the left margin is for the convenience of the user in locating areas where revisions have been made to the previous issue of the report. An (R) symbol to the left of the document title indicates a complete revision of the report.

PREPARED BY THE SAE VEHICLE ELECTRICAL AND ELECTRONICS
DIAGNOSTIC SYSTEMS STANDARDS COMMITTEE

Downloaded from SAE International by Tara Casaletto, Monday, January 09, 2023

APPENDIX A

(NORMATIVE)
PID (PARAMETER ID)/OBDMID (ON-BOARD MONITOR ID) /TID (TEST ID)/INFOTYPE SUPPORTED DEFINITION

This Appendix specifies standardized hex values to be used in the request message for services $01, $02, $05, $06, $08, and $09 to retrieve supported PIDs, OBDMIDs, TIDs, and INFOTYPEs.

TABLE A1—SUPPORTED PID/OBDMID/TID/INFOTYPE DEFINITION

Requested PID/OBDMID/TID/ INFOTYPE (hex)	Scaling/bit Number of data bytes = 4 Data A - D or B - E: bit evaluation PID/OBDMID/TID/INFOTYPE supported (Hex)			External test equipment SI (metric) / English display
00	Data A bit 7 Data A bit 6 : Data D bit 0	01 02 : 20	0 = not supported 1 = supported	The external test equipment creates an internal table in its memory to maintain a list of “Supported PIDs/ OBDMIDs/TIDs/ INFOTYPEs” for each ECU which responds on a service request message with the requested PID/OBDMID/TID/ INFOTYPE ($00, $20, … $C0). The external test equipment shall only request PID/ OBDMID/TID/INFOTYPE $20, $40, $60, $80, $A0, and $C0 if bit 0 of Data D in the previous “Supported PID/ OBDMID/TID/INFOTYPE” response message is set to ‘1’. This indicates that there are additional PID/ OBDMID/ TID/INFOTYPE(s) supported (linked list).
20	Data A bit 7 Data A bit 6 : Data D bit 0	21 22 : 40	0 = not supported 1 = supported	
40	Data A bit 7 Data A bit 6 : Data D bit 0	41 42 : 60	0 = not supported 1 = supported	
60	Data A bit 7 Data A bit 6 : Data D bit 0	61 62 : 80	0 = not supported 1 = supported	
80	Data A bit 7 Data A bit 6 : Data D bit 0	81 82 : A0	0 = not supported 1 = supported	
A0	Data A bit 7 Data A bit 6 : Data D bit 0	A1 A2 : C0	0 = not supported 1 = supported	
C0	Data A bit 7 Data A bit 6 : Data D bit 0	C1 C2 : E0	0 = not supported 1 = supported	
E0	Data A bit 7 Data A bit 6 : Data D bit 1 Data D bit 0	E1 E2 : FF reserved (set to 0)	0 = not supported 1 = supported	

Downloaded from SAE International by Tara Casaletto, Monday, January 09, 2023

APPENDIX B

(NORMATIVE)
PIDS (PARAMETER ID) FOR SERVICE $01 AND $02 SCALING AND DEFINITION

This Appendix uses the following nomenclature for numbering and units for the U.S., European notation, and External Test Equipment display. The following table includes an example.

TABLE B1—NUMBERING AND UNITS FOR THE U.S., EUROPEAN NOTATION, AND EXTERNAL TEST EQUIPMENT DISPLAY

Annex example	U.S. notation	European notation	External Test Equipment display
4750.75 min^{-1}	4,750.75 min^{-1}	4.750,75 min^{-1}	4750.75 min^{-1}

TABLE B2—PID $01 DEFINITION

PID (hex)	Description	Data byte	Scaling/bit	External test equipment SI (Metric) / English display
01	Monitor status since DTCs cleared			
	The bits in this PID shall report two pieces of information for each monitor: a) Monitor status since DTCs were last cleared, saved in NVRAM or Keep Alive RAM. b) Monitors supported on this vehicle.			
	Number of emission-related DTCs and MIL status	A (bit)	byte 1 of 4	DTC and MIL status:
	# of DTCs stored in this ECU	0-6	hex to decimal	DTC_CNT: xxxd
	Malfunction Indicator Lamp (MIL) Status	7	0 = MIL OFF; 1 = MIL ON	MIL: OFF or ON
	The MIL status shall indicate "OFF" during the key on, engine off bulb check unless the MIL has also been commanded "ON" for a detected malfunction.			
	Supported tests which are continuous	B (bit)	byte 2 of 4 (Low Nibble)	Support status of continuous monitors:
	Misfire monitoring	0	0 =monitor not supported (NO) 1 =monitor supported (YES)	MIS_SUP: NO or YES
	Misfire monitoring shall be supported on both, spark ignition and compression vehicles if the vehicle utilises a misfire monitor.			
	Fuel system monitoring	1	0 =monitor not supported (NO) 1 =monitor supported (YES)	FUEL_SUP: NO or YES
	Fuel system monitoring shall be supported on vehicles that utilise oxygen sensors for closed loop fuel feedback control, and utilise a fuel system monitor, typically spark ignition engines.			
	Comprehensive component monitoring	2	0 =monitor not supported (NO) 1 =monitor supported (YES)	CCM_SUP: NO or YES
	Comprehensive component monitoring shall be supported on spark ignition and compression ignition vehicles that utilise comprehensive component monitoring.			
	reserved (bit shall be reported as ‘0’)	3		---

Downloaded from SAE International by Tara Casaletto, Monday, January 09, 2023

TABLE B3—PID $01 DEFINITION (CONTINUED)

PID (hex)	Description	Data byte	Scaling/bit	External test equipment SI (Metric) / English display
	Status of continuous monitoring tests since DTC cleared:	B (bit)	byte 2 of 4 (High Nibble)	Completion status of continuous monitors since DTC cleared:
	Misfire monitoring	4	0 =monitor complete, or not applicable (YES) 1 =monitor not complete (NO)	MIS_RDY: YES or NO
	Misfire monitoring shall always indicate complete for spark ignition engines. Misfire monitoring shall indicate complete for compression ignition engines after the misfire evaluation is complete.			
	Fuel system monitoring	5	0 =monitor complete, or not applicable (YES) 1 =monitor not complete (NO)	FUEL_RDY: YES or NO
	Fuel system monitoring shall always indicate complete for both spark ignition and compression ignition engines.			
	Comprehensive component monitoring	6	0 =monitor complete, or not applicable (YES) 1 =monitor not complete (NO)	CCM_RDY: YES or NO
	Comprehensive component monitoring shall always indicate complete on both spark ignition and compression ignition engines.			
	Reserved (bit shall be reported as ‘0’)	7		---
	Supported tests run at least once per trip	C (bit)	byte 3 of 4	Support status of non-continuous monitors:
	Catalyst monitoring	0	0 =monitor not supported (NO) 1 =monitor supported (YES)	CAT_SUP: NO or YES
	Heated catalyst monitoring	1		HCAT_SUP: NO or YES
	Evaporative system monitoring	2		EVAP_SUP: NO or YES
	Secondary air system monitoring	3		AIR_SUP: NO or YES
	A/C system refrigerant monitoring	4		ACRF_SUP: NO or YES
	Oxygen sensor monitoring	5		O2S_SUP: NO or YES
	Oxygen sensor heater monitoring	6		HTR_SUP: NO or YES
	EGR system monitoring	7		EGR_SUP: NO or YES
	Status of tests run at least once per trip	D (bit)	byte 4 of 4	Completion status of non-continuous monitors since DTCs cleared:
	Catalyst monitoring	0	0 =monitor complete, or not applicable (YES) 1 =monitor not complete (NO)	CAT_RDY: YES or NO
	Heated catalyst monitoring	1		HCAT_RDY: YES or NO
	Evaporative system monitoring	2		EVAP_RDY: YES or NO
	Secondary air system monitoring	3		AIR_RDY: YES or NO
	A/C system refrigerant monitoring	4		ACRF_RDY: YES or NO
	Oxygen sensor monitoring	5		O2S_RDY: YES or NO
	Oxygen sensor heater monitoring	6		HTR_RDY: YES or NO
	EGR system monitoring	7		EGR_RDY: YES or NO

Downloaded from SAE International by Tara Casaletto, Monday, January 09, 2023

TABLE B4—PID $02 DEFINITION

PID (hex)	Description	Data byte	Min. value	Max. value	Scaling	External test equipment SI (Metric) / English display
02	DTC that caused required freeze frame data storage ($0000 indicates no freeze frame data)	A, B	00 00	FF FF	Hexadecimal e.g., P01AB (DTCs defined in SAE J2012	DTCFRZF: Pxxxx, Cxxxx, Bxxxx, Uxxxx

TABLE B5—PID $03 DEFINITION

PID (hex)	Description	Data Byte	Scaling/bit	External test equipment SI (Metric) / English display
03	Fuel system 1 status:	A (bit)	byte 1 of 2	FUELSYS1:
	(unused bits shall be reported as ‘0’; no more than one bit at a time can be set to a ‘1’ of that bank)	0	1 = Open loop - has not yet satisfied conditions to go closed loop	OL
		1	1 = Closed loop - using oxygen sensor(s) as feedback for fuel control	CL
		2	1 = Open loop due to driving conditions (e.g., power enrichment, deceleration enleanment)	OL-Drive
		3	1 = Open loop - due to detected system fault	OL-Fault
		4	1 = Closed loop, but fault with at least one oxygen sensor - may be using single oxygen sensor for fuel control	CL-Fault
		5-7	reserved (bits shall be reported as ‘0’)	---
	NOTE Fuel systems do not normally refer to injector banks. Fuel systems are intended to represent completely different fuel systems that can independently enter and exit closed loop fuel. Banks of injectors on a V-engine are generally not independent and share the same closed-loop enablement criteria.			
	Fuel system 2 status:	B (bit)	byte 2 of 2	FUELSYS2:
	(unused bits shall be reported as ‘0’; no more than one bit at a time can be set to a ‘1’ of that bank)	0	1 = Open loop - has not yet satisfied conditions to go closed loop	OL
		1	1 = Closed loop - using oxygen sensor(s) as feedback for fuel control	CL
		2	1 = Open loop due to driving conditions (e.g., power enrichment, deceleration enleanment)	OL-Drive
		3	1 = Open loop - due to detected system fault	OL-Fault
		4	1 = Closed loop, but fault with at least one oxygen sensor - may be using single oxygen sensor for fuel control	CL-Fault
		5-7	reserved (bits shall be reported as ‘0’)	---

Downloaded from SAE International by Tara Casaletto, Monday, January 09, 2023

TABLE B6—PID $04 - $05 DEFINITION

PID (hex)	Description	Data byte	Min. value	Max. value	Scaling/bit	External test equipment SI (Metric) / English display
04	Calculated LOAD Value!	A	0 %	100 %	100/255 %	LOAD_PCT: xxx.x %
	The OBD regulations previously defined CLV as: (current airflow / peak airflow @sea level) * (BARO @ sea level / BARO) * 100% Various manufacturers have implemented this calculation in a variety of ways. The following definition, although a little more restrictive, will standardise and improve the accuracy the calculation. LOAD_PCT = [current airflow] / [(peak airflow at WOT@STP as a function of rpm) * (BARO/29.92) * SQRT(298/(AAT+273))] — Where: STP = Standard Temperature and Pressure = 25 °C, 29.92 in Hg BARO, SQRT = square root, — WOT = wide open throttle, AAT = Ambient Air Temperature and is in °C Characteristics of LOAD_PCT are: — Reaches 1.0 at WOT at any altitude, temperature or rpm for both naturally aspirated and boosted engines. — Indicates percent of peak available torque. — Linearly correlated with engine vacuum — Often used to schedule power enrichment. — Compression ignition engines (diesels) shall support this PID using fuel flow in place of airflow for the above calculations. NOTE Both spark ignition and compression ignition engines shall support PID $04. See PID $43 for an additional definition of engine LOAD.					
05	Engine Coolant Temperature	A	–40 °C	+215 °C	1 °C with –40 °C offset	ECT: xxx °C (xxx °F)
	ECT shall display engine coolant temperature derived from an engine coolant temperature sensor or a cylinder head temperature sensor. Many diesels do not use either sensor and may substitute Engine Oil Temperature instead.					

Downloaded from SAE International by Tara Casaletto, Monday, January 09, 2023

TABLE B7—PID $06 - $09 DEFINITION

PID (hex)	Description	Data byte	Min. value	Max. value	Scaling/bit	External test equipment SI (Metric) / English display
06	Short Term Fuel Trim - Bank 1 (use if only 1 fuel trim value) Short Term Fuel Trim - Bank 3	A B	–100 % (lean)	+99.22 % (rich)	100/128 % (0 % at 128)	SHRTFT1: xxx.x % SHRTFT3: xxx.x %
	Short Term Fuel Trim Bank 1/3 shall indicate the correction being utilised by the closed loop fuel algorithm. If the fuel system is in open loop, SHRTFT1/3 shall report 0% correction. NOTE Data B shall only be included in the response message of a PID $06 if supported by the vehicle. If PID $1D Oxygen Sensor Location of Bank 1, 2, 3, 4 is supported then the external test equipment shall determine based on the data content (Bank 3 supported) of PID $1D if Data B of PID $06 is supported or not.					
07	Long Term Fuel Trim - Bank 1 (use if only 1 fuel trim value) Long Term Fuel Trim - Bank 3	A B	–100 % (lean)	+99.22 % (rich)	100/128 % (0 % at 128)	LONGFT1: xxx.x % LONGFT3: xxx.x %
	Fuel trim correction for Bank 1/3 stored in Non-volatile RAM or Keep-alive RAM. LONGFT shall indicate the correction being utilised by the fuel control algorithm at the time the data is requested, in both open loop and closed loop fuel control. If no correction i s utilised in open loop fuel, LONGFT shall report 0% correction. If long-term fuel trim is not utilised at all by the fuel control algorithm, the PID shall not be supported. NOTE Data B shall only be included in the response message of a PID $07 if supported by the vehicle. If PID $1D Oxygen Sensor Location of Bank 1, 2, 3, 4 is supported then the external test equipment shall determine based on the data content (Bank 3 supported) of PID $1D if Data B of PID $07 is supported or not.					
08	Short Term Fuel Trim - Bank 2 (use if only 1 fuel trim value) Short Term Fuel Trim - Bank 4	A B	–100 % (lean)	+99.22 % (rich)	100/128 % (0 % at 128)	SHRTFT2: xxx.x % SHRTFT4: xxx.x %
	Short Term Fuel Trim Bank 2/4 shall indicate the correction being utilised by the closed loop fuel algorithm. If the fuel system is in open loop, SHRTFT24 shall report 0% correction. NOTE Data B shall only be included in the response message of a PID $08 if supported by the vehicle. If PID $1D Oxygen Sensor Location of Bank 1, 2, 3, 4 is supported then the external test equipment shall determine based on the data content (Bank 4 supported) of PID $1D if Data B of PID $08 is supported or not.					
09	Long Term Fuel Trim – Bank 2 (use if only 1 fuel trim value) Long Term Fuel Trim - Bank 4	A B	–100 % (lean)	+99.22 % (rich)	100/128 % (0 % at 128)	LONGFT2: xxx.x % LONGFT4: xxx.x %
	Fuel trim correction for Bank 2/4 stored in Non-volatile RAM or Keep-alive RAM. LONGFT shall indicate the correction being utilised by the fuel control algorithm at the time the data is requested, in both open loop and closed loop fuel control. If no correction i s utilised in open loop fuel, LONGFT shall report 0% correction. If long-term fuel trim is not utilised at all by the fuel control algorithm, the PID shall not be supported. NOTE Data B shall only be included in the response message of a PID $09 if supported by the vehicle. If PID $1D Oxygen Sensor Location of Bank 1, 2, 3, 4 is supported then the external test equipment shall determine based on the data content (Bank 4 supported) of PID $1D if Data B of PID $09 is supported or not.					

Downloaded from SAE International by Tara Casaletto, Monday, January 09, 2023

TABLE B8—PID $0A - $11 DEFINITION

PID (hex)	Description	Data byte	Min. value	Max. value	Scaling/bit	External test equipment SI (Metric) / English display
0A	Fuel Rail Pressure (gauge)	A	0 kPa (gauge)	765 kPa (gauge)	3 kPa per bit (gauge)	FRP: xxx kPa (xx.x psi)
	FRP shall display fuel rail pressure at the engine when the reading is referenced to atmosphere (gauge pressure). For systems supporting a fuel pressure sensor, one of the following 3 PIDs is required: 0A, 22, or 23. Support for more than one of these PIDs is not allowed.					
0B	Intake Manifold Absolute Pressure	A	0 kPa (absolute)	255 kPa (absolute)	1 kPa per bit (absolute)	MAP: xxx kPa (xx.x inHg)
	MAP shall display manifold pressure derived from a Manifold Absolute Pressure sensor, if a sensor is utilised. If a vehicle uses both a MAP and MAF sensor, both the MAP and MAF PIDs shall be supported.					
0C	Engine RPM	A, B	0 min^{-1}	16383.75 min^{-1}	¼ rpm per bit	RPM: xxxxx min^{-1}
0D	Vehicle Speed Sensor	A	0 km/h	255 km/h	1 km/h per bit	VSS: xxx km/h (xxx mph)
	VSS shall display vehicle road speed, if utilised by the control module strategy. Vehicle speed may be derived from a vehicle speed sensor, calculated by the PCM using other speed sensors, or obtained from the vehicle serial data communication bus.					
0E	Ignition Timing Advance for #1 Cylinder	A	–64 °	63.5 °	½ ° with 0 ° at 128	SPARKADV: xx °
	Ignition timing spark advance for #1 cylinder (not including mechanical advance)					
0F	Intake Air Temperature	A	–40 °C	+215 °C	1 °C with -40 °C offset	IAT: xxx °C (xxx °F)
	IAT shall display intake manifold air temperature, if utilised by the control module strategy. IAT may be obtained directly from a sensor, or may be inferred by the control strategy using other sensor inputs.					
10	Air Flow Rate from Mass Air Flow Sensor	A, B	0 g/s	655.35 g/s	0.01 g/s	MAF: xxx.xx g/s (xxxx.x lb/min)
	MAF shall display the airflow rate as measured by the MAF sensor, if a sensor is utilised.					
11	Absolute Throttle Position	A	0 %	100 %	100/255 %	TP: xxx.x %
	Absolute throttle position (not “relative” or “learned” throttle position) shall be displayed as a normalised value, scaled from 0 to 100%. For example, if a 0 to 5.0 volt sensor is used (uses a 5.0 volt reference voltage), and the closed throttle position is a 1.0 volts, TP shall display (1.0 / 5.0) = 20% at closed throttle and 50% at 2.5 volts. Throttle position at idle will usually indicate greater than 0%, and throttle position at wide open throttle will usually indicate less than 100%. For systems where the output is proportional to the input voltage, this value is the percent of maximum input reference voltage. For systems where the output is inversely proportional to the input voltage, this value is 100% minus the percent of maximum input reference voltage. NOTE See PID $45 for a definition of Relative Throttle Position.					

Downloaded from SAE International by Tara Casaletto, Monday, January 09, 2023

TABLE B9—PID $12 DEFINITION

PID (hex)	Description	Data byte	Scaling/bit	External test equipment SI (Metric) / English display
12	Commanded Secondary Air Status	A (bit)	byte 1 of 1	AIR_STAT:
	(if supported, one, and only one bit at a time can be set to a 1)	0	1 =upstream of first catalytic converter	AIR_STAT: UPS
		1	1 =downstream of first catalytic converter inlet	AIR_STAT: DNS
		2	1 =atmosphere / off	AIR_STAT: OFF
		3-7	reserved (bits shall be reported as ‘0’)	---

TABLE B10—PID $13 DEFINITION

PID (hex)	Description	Data byte	Scaling/bit	External test equipment SI (Metric) / English display
13	Location of Oxygen Sensors	A (bit)	byte 1 of 1	O2SLOC:
	(where sensor 1 is closest to the engine. Each bit indicates the presence or absence of an oxygen sensor at the following location)	0	1 =Bank 1 - Sensor 1 present at that location	O2S11
		1	1 =Bank 1 - Sensor 2 present at that location	O2S12
		2	1 =Bank 1 - Sensor 3 present at that location	O2S13
		3	1 =Bank 1 - Sensor 4 present at that location	O2S14
		4	1 =Bank 2 - Sensor 1 present at that location	O2S21
		5	1 =Bank 2 - Sensor 2 present at that location	O2S22
		6	1 =Bank 2 - Sensor 3 present at that location	O2S23
		7	1 =Bank 2 - Sensor 4 present at that location	O2S24

NOTE— PID $13 shall only be supported by a given vehicle if PID $1D is not supported. In no case shall a vehicle support both PIDs.

Downloaded from SAE International by Tara Casaletto, Monday, January 09, 2023

TABLE B11—PID $14 - $1B DEFINITION

PID (hex)	Description Use if PID $13 is supported!	Data byte	Min. value	Max. value	Scaling/bit	External test equipment SI (Metric) / English display
14	Bank 1 – Sensor 1		These PIDs shall be used for a conventional, 0 to 1 Volt oxygen sensor. Any sensor with a different full scale value shall be normalised to provide nominal full scale at $C8 (200 decimal). Wide-range/linear oxygen sensors shall use PIDs $24 to $2B or PIDs $34 to $3B.			
15	Bank 1 – Sensor 2					
16	Bank 1 – Sensor 3					
17	Bank 1 – Sensor 4					
18	Bank 2 – Sensor 1					
19	Bank 2 – Sensor 2					
1A	Bank 2 – Sensor 3					
1B	Bank 2 – Sensor 4					
	Oxygen Sensor Output Voltage (Bx-Sy)	A	0 V	1.275 V	0.005 V	O2Sxy: x.xxx V
	Short Term Fuel Trim (Bx-Sy) (associated with this sensor $FF if this sensor is not used in the calculation)	B	–100.00 % (lean)	99.22 % (rich)	100/128 % (0 % at 128)	SHRTFTxy: xxx.x %

NOTE— The PIDs listed in the table above only apply if PID $13 is used to define the oxygen sensor location.

TABLE B12—PID $14 - $1B DEFINITION

PID (hex)	Description Use if PID $1D is supported!	Data byte	Min. value	Max. value	Scaling/bit	External test equipment SI (Metric) / English display
14	Bank 1 – Sensor 1		These PIDs shall be used for a conventional, 0 to 1 Volt oxygen sensor. Any sensor with a different full scale value shall be normalised to provide nominal full scale at $C8 (200 decimal). Wide-range/linear oxygen sensors shall use PIDs $24 to $2B or PIDs $34 to $3B.			
15	Bank 1 – Sensor 2					
16	Bank 2 – Sensor 1					
17	Bank 2 – Sensor 2					
18	Bank 3 – Sensor 1					
19	Bank 3 – Sensor 2					
1A	Bank 4 – Sensor 1					
1B	Bank 4 – Sensor 2					
	Oxygen Sensor Output Voltage (Bx-Sy)	A	0 V	1.275 V	0.005 V	O2Sxy: x.xxx V
	Short Term Fuel Trim (Bx-Sy) (associated with this sensor $FF if this sensor is not used in the calculation)	B	–100.00 % (lean)	99.22 % (rich)	100/128 % (0 % at 128)	SHRTFTxy: xxx.x %

NOTE— The PIDs listed in the table above only apply if PID $1D is used to define the oxygen sensor location.

Downloaded from SAE International by Tara Casaletto, Monday, January 09, 2023

TABLE B13—PID $1C DEFINITION

PID (hex)	Description	Data byte	Scaling	External test equipment SI (Metric) / English display
1C	OBD requirements to which vehicle is designed	A (hex)	byte 1 of 1 (State Encoded Variable)	OBDSUP:
		01	OBD II (California ARB)	OBD II
		02	OBD (Federal EPA)	OBD
		03	OBD and OBD II	OBD and OBD II
		04	OBD I	OBD I
		05	Not OBD compliant	NO OBD
		06	EOBD	EOBD
		07	EOBD and OBD II	EOBD and OBD II
		08	EOBD and OBD	EOBD and OBD
		09	EOBD, OBD and OBD II	EOBD, OBD and OBD II
		0A	JOBD	JOBD
		0B	JOBD and OBD II	JOBD and OBD II
		0C	JOBD and EOBD	JOBD and EOBD
		0D	JOBD, EOBD, and OBD II	JOBD, EOBD, and OBD II
		0E - FF	reserved by document	---

TABLE B14—PID $1D DEFINITION

PID (hex)	Description	Data byte	Scaling/bit	External test equipment SI (Metric) / English display
1D	Location of oxygen sensors	A (bit)	byte 1 of 1	O2SLOC:
	(where sensor 1 is closest to the engine. Each bit indicates the presence or absence of an oxygen sensor at the following location)	0	1 =Bank 1 - Sensor 1 present at that location	O2S11
		1	1 =Bank 1 - Sensor 2 present at that location	O2S12
		2	1 =Bank 2 - Sensor 1 present at that location	O2S21
		3	1 =Bank 2 - Sensor 2 present at that location	O2S22
		4	1 =Bank 3 - Sensor 1 present at that location	O2S31
		5	1 =Bank 3 - Sensor 2 present at that location	O2S32
		6	1 =Bank 4 - Sensor 1 present at that location	O2S41
		7	1 =Bank 4 - Sensor 2 present at that location	O2S42

NOTE— PID $1D shall only be supported by a given vehicle if PID $13 is not supported. In no case shall a vehicle support both PIDs.

Downloaded from SAE International by Tara Casaletto, Monday, January 09, 2023

TABLE B15—PID $1E DEFINITION

PID (hex)	Description	Data byte	Scaling/bit	External test equipment SI (Metric) / English display
1E	Auxiliary Input Status	A (bit)	byte 1 of 1	Auxiliary Input Status
	Power Take Off (PTO) Status	0	0 = PTO not active (OFF); 1 = PTO active (ON)	PTO_STAT: OFF or ON
		1-7	reserved (bits shall be reported as '0')	---

TABLE B16—PID $1F DEFINITION

PID (hex)	Description	Data byte	Min. value	Max. value	Scaling/bit	External test equipment SI (Metric) / English display
1F	Time Since Engine Start	A, B	0 sec.	65,535 sec.	1 second per count	RUNTM: xxxxx sec.
	RUNTM shall increment while the engine is running. It shall freeze if the engine stalls. RUNTM shall be reset to zero during every control module power-up and when entering the key-on, engine off position. RUNTM is limited to 65,535 seconds and shall not wrap around to zero.					

TABLE B17—PID $21 DEFINITION

PID (hex)	Description	Data byte	Min. value	Max. value	Scaling/ bit	External test equipment SI (Metric) / English display
21	Distance Travelled While MIL is Activated	A, B	0 km	65535 km	1 km per count	MIL_DIST: xxxxx km (xxxxx miles)
	Conditions for "Distance travelled" counter: • reset to $0000 when MIL state changes from deactivated to activated by this ECU • accumulate counts in km if MIL is activated (ON) • do not change value while MIL is not activated (OFF) • reset to $0000 if diagnostic information is cleared either by service $04 or 40 warm-up cycles without MIL activated • do not wrap to $0000 if value is $FFFF					

TABLE B18—PID $22 DEFINITION

PID (hex)	Description	Data byte	Min. value	Max. value	Scaling/bit	External test equipment SI (Metric) / English display
22	Fuel Rail Pressure relative to manifold vacuum	A, B	0 kPa	5177.27 kPa	0.079 kPa per bit unsigned, 1 kPa = 0.1450377 PSI	FRP: xxxx.xxx kPa (xxx.x PSI)
	FRP shall display fuel rail pressure at the engine when the reading is referenced to manifold vacuum (relative pressure). For systems supporting a fuel pressure sensor, one of the following 3 PIDs is required: 0A, 22, or 23. Support for more than one of these PIDs is not allowed.					

Downloaded from SAE International by Tara Casaletto, Monday, January 09, 2023

TABLE B19—PID $23 DEFINITION

PID (hex)	Description	Data byte	Min. value	Max. value	Scaling/bit	External test equipment SI (Metric) / English display
23	Fuel Rail Pressure	A, B	0 kPa	655350 kPa	10 kPa per bit unsigned, 1 kPa = 0.1450377 PSI	FRP: xxxxxx kPa (xxxxx.x PSI)
	FRP shall display fuel rail pressure at the engine when the reading is referenced to atmosphere (gage pressure). Diesel fuel pressure and gasoline direct injection systems have a higher pressure range than FRP PID $0A. For systems supporting a fuel pressure sensor, one of the following 3 PIDs is required: 0A, 22, or 23. Support for more than one of these PIDs is not allowed.					

TABLE B20—PID $24 - $2B DEFINITION

PID (hex)	Description Use if PID $1D is supported!	Data byte	Min. value	Max. value	Scaling/bit	External test equipment SI (Metric) / English display
24	Bank 1 – Sensor 1 (wide range O2S)		PIDs $24 to $2B shall be used for linear or wide-ratio Oxygen Sensors when equivalence ratio and voltage are displayed			
25	Bank 1 – Sensor 2 (wide range O2S)					
26	Bank 1 – Sensor 3 (wide range O2S)					
27	Bank 1 – Sensor 4 (wide range O2S)					
28	Bank 2 – Sensor 1 (wide range O2S)					
29	Bank 2 – Sensor 2 (wide range O2S)					
2A	Bank 2 – Sensor 3 (wide range O2S)					
2B	Bank 2 – Sensor 4 (wide range O2S)					
	Equivalence Ratio (lambda) (Bx-Sy)	A, B	0	1.999	0.0000305	EQ_RATxy: x.xxx
	Oxygen Sensor Voltage (Bx-Sy)	C, D	0 V	7.999 V	0.000122 V	O2Sxy: x.xxx V

NOTE— The PIDs listed in the table above only apply if PID $13 is used to define the oxygen sensor location.

TABLE B21—PID $24 - $2B DEFINITION

PID (hex)	Description Use if PID $1D is supported!	Data byte	Min. value	Max. value	Scaling/bit	External test equipment SI (Metric) / English display
24	Bank 1 - Sensor 1 (wide range O2S)		PIDs $24 to $2B shall be used for linear or wide-ratio Oxygen Sensors when equivalence ratio and voltage are displayed			
25	Bank 1 - Sensor 2 (wide range O2S)					
26	Bank 2 - Sensor 1 (wide range O2S)					
27	Bank 2 - Sensor 2 (wide range O2S)					
28	Bank 3 - Sensor 1 (wide range O2S)					
29	Bank 3 - Sensor 2 (wide range O2S)					
2A	Bank 4 - Sensor 1 (wide range O2S)					
2B	Bank 4 - Sensor 2 (wide range O2S)					
	Equivalence Ratio (lambda) (Bx-Sy)	A, B	0	1.999	0.0000305	EQ_RATxy: x.xxx
	Oxygen Sensor Voltage (Bx-Sy)	C, D	0 V	7.999 V	0.000122 V	O2Sxy: x.xxx V

NOTE— The PIDs listed in the table above only apply if PID $1D is used to define the oxygen sensor location.

Downloaded from SAE International by Tara Casaletto, Monday, January 09, 2023

TABLE B22—PID $2C - $2D DEFINITION

PID (hex)	Description	Data byte	Min. value	Max. value	Scaling/bit	External test equipment SI (Metric) / English display
2C	Commanded EGR	A	0% (no flow)	100% (max. flow)	100/255 %	EGR_PCT: xxx.x%
	Commanded EGR displayed as a percent. EGR_PCT shall be normalised to the maximum EGR commanded output control parameter. EGR systems use a variety of methods to control the amount of EGR delivered to the engine. 1) If an on/off solenoid is used – EGR_PCT shall display 0% when the EGR is commanded off, 100% when the EGR system is commanded on. 2) If a vacuum solenoid is duty cycled, the EGR duty cycle from 0 to 100% shall be displayed. 3) If a linear or stepper motor valve is used, the fully closed position shall be displayed as 0%, the fully open position shall be displayed as 100%. Intermediate positions shall be displayed as a percent of the full-open position. For example, a stepper-motor EGR valve that moves from 0 to 128 counts shall display 0% at 0 counts, 100% at 128 counts and 50% at 64 counts. 4) Any other actuation method shall be normalised to display 0% when no EGR is commanded and 100% at the maximum commanded EGR position.					
2D	EGR Error = (EGR actual – EGR commanded) / EGR commanded * 100%	A	–100 % (less than commanded)	+99.22 % (more than commanded)	100/128 % (0 % at 128)	EGR_ERR: xxx.x%
	EGR error, as a percent of commanded EGR. Often, EGR valve control outputs are not in the same engineering units as the EGR feedback input sensors. For example, an EGR valve can be controlled using a duty-cycled vacuum solenoid, however, the feedback input sensor is a position sensor. This makes it impossible to display "actual" versus "commanded" in the same engineering units. EGR error solved this problem by displaying a normalised (non-dimensional) EGR system feedback parameter. EGR error is defined to be: (actual EGR – commanded EGR) / commanded EGR. For example if 10% EGR is commanded and 5% is delivered to the engine, the EGR_ERR is (5% – 10%) / 10 = -50% error. EGR_ERR may be computed using various control parameters such as position, steps, counts, etc. All EGR systems must react to quickly changing conditions in the engine; therefore, EGR_ERR will generally show errors during transient conditions. Under steady condition, the error will be minimised (no necessarily zero, however) if the EGR system is under control. If the control system does not use closed loop control, EGR_ERR shall not be supported. When commanded EGR is 0%, EGR error is technically undefined. In this case EGR error should be set to 0% when actual EGR = 0% or EGR error should be set to 99.2% when actual EGR > 0%.					

Downloaded from SAE International by Tara Casaletto, Monday, January 09, 2023

TABLE B23—PID $2E - $32 DEFINITION

PID (hex)	Description	Data byte	Min. value	Max. value	Scaling/bit	External test equipment SI (Metric) / English display
2E	Commanded Evaporative Purge	A	0% no flow	100% max. flow	100/255 %	EVAP_PCT: xxx.x %
	Commanded evaporative purge control valve displayed as a percent. EVAP_PCT shall be normalised to the maximum EVAP purge commanded output control parameter. 1)If an on/off solenoid is used – EVAP_PCT shall display 0% when purge is commanded off, 100% when purge is commanded on. 2)If a vacuum solenoid is duty cycled, the EVAP purge valve duty cycle from 0 to 100% shall be displayed. 3)If a linear or stepper motor valve is used, the fully closed position shall be displayed as 0%, the fully open position shall be displayed as 100%. Intermediate positions shall be displayed as a percent of the full-open position. For example, a stepper-motor EVAP purge valve that moves from 0 to 128 counts shall display 0% at 0 counts, 100% at 128 counts and 50% at 64 counts. 4)Any other actuation method shall be normalised to display 0% when no purge is commanded and 100% at the maximum commanded purge position/flow.					
2F	Fuel Level Input	A	0% no fuel	100% max. fuel capacity	100/255 %	FLI: xxx.x %
	FLI shall indicate nominal fuel tank liquid fill capacity as a percent of maximum, if utilised by the control module for OBD monitoring. FLI may be obtained directly from a sensor, may be obtained indirectly via the vehicle serial data communication bus, or may be inferred by the control strategy using other sensor inputs. Vehicles that use gaseous fuels shall display the percent of useable fuel capacity.					
30	Number of warm-ups since diagnostic trouble codes cleared	A	0	255	1 warm-up per count	WARM_UPS: xxx
	Number of OBD warm-up cycles since all DTCs were cleared (via an external test equipment or possibly, a battery disconnect). A warm-up is defined in the OBD regulations to be sufficient vehicle operation such that coolant temperature rises by at least 22 °C (40 °F) from engine starting and reaches a minimum temperature of 70 °C (160 °F) (60 °C (140 °F) for diesels). This PID is not associated with any particular DTC. It is simply an indication for I/M, of the last time an external test equipment was used to clear DTCs. If greater than 255 warm ups have occurred, WARM_UPS shall remain at 255 and not wrap to zero.					
31	Distance since diagnostic trouble codes cleared	A, B	0 km	65,535 km	1 km per count	CLR_DIST: xxxxx km (xxxxx miles)
	Distance accumulated since DTCs were cleared (via an external test equipment or possibly, a battery disconnect). This PID is not associated with any particular DTC. It is simply an indication for I/M (Inspection/Maintenance), of the last time an external test equipment was used to clear DTCs. If greater than 65,535 km have occurred, CLR_DIST shall remain at 65,535 km and not wrap to zero.					
32	Evap System Vapor Pressure	A, B	($8000) –8192 Pa (–32.8878 inH2O)	($7FFF) 8191 Pa (32.8838 inH2O)	0.25 Pa per bit signed	EVAP_VP: xxxx.xx Pa (xx.xxx in H2O)
	Evaporative system vapor pressure, if utilised by the control module. The pressure signal is normally obtained from a sensor located in the fuel tank (FTP – Fuel Tank Pressure) or a sensor in an evaporative system vapor line.					

Downloaded from SAE International by Tara Casaletto, Monday, January 09, 2023

TABLE B24—PID $33 DEFINITION

PID (hex)	Description	Data byte	Min. value	Max. value	Scaling/bit	External test equipment SI (Metric) / English display
33	Barometric Pressure	A	0 kPa (absolute)	255 kPa (absolute)	1 kPa per bit (absolute)	BARO: xxx kPa (xx.x inHg)
	Barometric pressure utilised by the control module. BARO is normally obtained from a dedicated BARO sensor, from a MAP sensor at key-on and during certain modes of driving, or inferred from a MAF sensor and other inputs during certain modes of driving. The control module shall report BARO from whatever source it is derived from. NOTE Some weather services report local BARO values adjusted to sea level. In these cases, the reported value may not match the displayed value on the external test equipment. NOTE If BARO is inferred while driving and stored in non-volatile RAM or Keep-alive RAM, BARO may not be accurate after a battery disconnect or total memory clear.					

TABLE B25—PID $34 - $3B DEFINITION

PID (hex)	Description Use if PID $1D is supported!	Data byte	Min. value	Max. value	Scaling/bit	External test equipment SI (Metric) / English display
34	Bank 1 - Sensor 1 (wide range O2S)		PIDs $34 to $3B shall be used for linear or wide-ratio Oxygen Sensors when equivalence ratio and current are displayed			
35	Bank 1 - Sensor 2 (wide range O2S)					
36	Bank 1 - Sensor 3 (wide range O2S)					
37	Bank 1 - Sensor 4 (wide range O2S)					
38	Bank 2 - Sensor 1 (wide range O2S)					
39	Bank 2 - Sensor 2 (wide range O2S)					
3A	Bank 2 - Sensor 3 (wide range O2S)					
3B	Bank 2 - Sensor 4 (wide range O2S)					
	Equivalence Ratio (lambda) (Bx-Sy)	A, B	0	1.999	0.0000305	EQ_RATxy: x.xxx
	Oxygen Sensor Current (Bx-Sy)	C, D	–128 mA	127.996 mA	0.00390625 mA ($8000 = 0 mA)	O2Sxy: x.xxx mA

NOTE— The PIDs listed in the table above only apply if PID $13 is used to define the oxygen sensor location.

Downloaded from SAE International by Tara Casaletto, Monday, January 09, 2023

TABLE B26—PID $34 - $3B DEFINITION

PID (hex)	Description Use if PID $1D is supported!	Data byte	Min. value	Max. value	Scaling/bit	External test equipment SI (Metric) / English display
34	Bank 1 - Sensor 1 (wide range O2S)		PIDs $34 to $3B shall be used for linear or wide-ratio Oxygen Sensors when equivalence ratio and current are displayed			
35	Bank 1 - Sensor 2 (wide range O2S)					
36	Bank 2 - Sensor 1 (wide range O2S)					
37	Bank 2 - Sensor 2 (wide range O2S)					
38	Bank 3 - Sensor 1 (wide range O2S)					
39	Bank 3 - Sensor 2 (wide range O2S)					
3A	Bank 4 - Sensor 1 (wide range O2S)					
3B	Bank 4 - Sensor 2 (wide range O2S)					
	Equivalence Ratio (lambda) (Bx-Sy)	A, B	0	1.999	0.0000305	EQ_RATxy: x.xxx
	Oxygen Sensor Current (Bx-Sy)	C, D	-128 mA	127.996 mA	0.00390625 mA ($8000 = 0 mA)	O2Sxy: x.xxx mA

NOTE— The PIDs listed in the table above only apply if PID $1D is used to define the oxygen sensor location.

TABLE B27—PID $3C - $3F DEFINITION

PID (hex)	Description	Data byte	Min. value	Max. value	Scaling/bit	External test equipment SI (Metric) / English display
3C	Catalyst Temperature Bank 1, Sensor 1	A, B	–40 °C	+6513.5 °C	0.1 °C / bit with –40 °C offset	CATEMP11: xxxx.x °C (xxxx.x °F)
	CATEMP11 shall display catalyst substrate temperature for a bank 1 catalyst, if utilised by the control module strategy for OBD monitoring, or the Bank 1, Sensor 1 catalyst temperature sensor. CATEMP11 may be obtained directly from a sensor, or may be inferred by the control strategy using other sensor inputs.					
3D	Catalyst Temperature Bank 2, Sensor 1	A, B	–40 °C	+6513.5 °C	0.1 °C / bit with –40 °C offset	CATEMP21: xxxx.x °C (xxxx.x °F)
	CATEMP21 shall display catalyst substrate temperature for a bank 2 catalyst, if utilised by the control module strategy for OBD monitoring, or the Bank 2, Sensor 1 catalyst temperature sensor. CATEMP21 may be obtained directly from a sensor, or may be inferred by the control strategy using other sensor inputs.					
3E	Catalyst Temperature Bank 1, Sensor 2	A, B	–40 °C	+6513.5 °C	0.1 °C / bit with –40 °C offset	CATEMP12: xxxx.x °C (xxxx.x °F)
	CATEMP12 shall display catalyst substrate temperature for an additional bank 1 catalyst, if utilised by the control module strategy for OBD monitoring, or the Bank 1, Sensor 2 catalyst temperature sensor. CATEMP12 may be obtained directly from a sensor, or may be inferred by the control strategy using other sensor inputs.					
3F	Catalyst Temperature Bank 2, Sensor 2	A, B	–40 °C	+6513.5 °C	0.1 °C / bit with –40 °C offset	CATEMP22: xxxx.x °C (xxxx.x °F)
	CATEMP22 shall display catalyst substrate temperature for an additional bank 2 catalyst, if utilised by the control module strategy for OBD monitoring, or the Bank 2, Sensor 2 catalyst temperature sensor. CATEMP22 may be obtained directly from a sensor, or may be inferred by the control strategy using other sensor inputs.					

Downloaded from SAE International by Tara Casaletto, Monday, January 09, 2023

TABLE B28—PID $41 DEFINITION

PID (hex)	Description	Data byte	Scaling/bit	External Test Equipment
41	Monitor status this driving cycle			
	The bit in this PID shall report two pieces of information for each monitor: 1) Monitor enable status for the current driving cycle. This bit shall indicate when a monitor is disabled in a manner such that there is no way for the driver to operate the vehicle for the remainder of the driving cycle and make the monitor run. Typical examples are: — Engine-off soak not long enough (e.g., cold start temperature conditions not satisfied), — Monitor maximum time limit or number of attempts/aborts exceeded, —Ambient air temperature too low or too high, — BARO too low (high altitude). The monitor shall not indicate "disabled" for operator-controlled conditions such as rpm, load, throttle position, minimum time limit not exceeded, ECT, TP, etc. 2) Monitor completion status for the current driving/monitoring cycle. Status shall be reset to "not complete" upon starting a new monitoring cycle. Note that some monitoring cycles can include various engine-operating conditions; other monitoring cycles begin after the ignition key is turned off. Some status bits on a given vehicle can utilise engine-running monitoring cycles while others can utilise engine-off monitoring cycles. Resetting the bits to "not complete" upon starting the engine will accommodate most engine-running and engine-off monitoring cycles, however, manufacturers are free to define their own monitoring cycles. NOTE PID $41 bits shall be utilised for all non-continuous monitors which are supported, and change completion status in PID $01. If a non-continuous monitor is not supported or always shows "complete", the corresponding PID $41 bits shall indicate disabled and complete. PID $41 bits may be utilised at the vehicle manufacturer's discretion for all continuous monitors which are supported with the exception of bit 03 which shall always show CCM (Comprehensive Component Monitoring) as enabled for spark ignition and compression ignition engines.			

Downloaded from SAE International by Tara Casaletto, Monday, January 09, 2023

TABLE B29—PID $41 DEFINITION (CONTINUED)

		A (bit)	**byte 1 of 4**	
	Reserved - shall be reported as $00	0-7		---
	Enable status of continuous monitors this monitoring cycle:	**B (bit)**	**byte 2 of 4 (Low Nibble)**	**Enable status of continuous monitors this monitoring cycle: NO means disabled for rest of this monitoring cycle or not supported in PID $01, YES means enabled for this monitoring cycle.**
	Misfire monitoring Fuel system monitoring Comprehensive component monitoring reserved (bit shall be reported as ‘0’)	0 1 2 3	0 = monitor disabled for rest of this monitoring cycle or not supported (NO) 1 = monitor enabled for this monitoring cycle (YES)	MIS_ENA: NO or YES FUEL_ENA: NO or YES CCM_ENA: YES
	Completion status of continuous monitors this monitoring cycle:	**B (bit)**	**byte 2 of 4 (High Nibble)**	**Completion status of continuous monitors this monitoring cycle:**
	Misfire monitoring Fuel system monitoring Comprehensive component monitoring reserved (bit shall be reported as ‘0’)	4 5 6 7	See PID $01 to determine which monitors are supported 0 = monitor complete this monitoring cycle, or not supported (YES) 1 = monitor not complete this monitoring cycle (NO)	MIS_CMPL: YES or NO FUELCMPL: YES or NO CCM_CMPL: YES or NO

TABLE B30—PID $41 DEFINITION (CONTINUED)

PID (hex)	Description	Data byte	Scaling/bit	External test equipment SI (Metric) / English display
41	Monitor status this driving cycle			
	Enable status of non-continuous monitors this monitoring cycle:	**C (bit)**	**byte 3 of 4**	**Enable status of non-continuous monitors this monitoring cycle:**
	Catalyst monitoring Heated catalyst monitoring Evaporative system monitoring Secondary air system monitoring A/C system refrigerant monitoring Oxygen sensor monitoring Oxygen sensor heater monitoring EGR system monitoring	0 1 2 3 4 5 6 7	0 =monitor disabled for rest of this monitoring cycle (NO) 1 =monitor enabled for this monitoring cycle (YES)	CAT_ENA: YES or NO HCAT_ENA: YES or NO EVAP_ENA: YES or NO AIR_ENA: YES or NO ACRF_ENA: YES or NO O2S_ENA: YES or NO HTR_ENA: YES or NO EGR_ENA: YES or NO
	Completion status of non-continuous monitors this monitoring cycle:	**D (bit)**	**byte 4 of 4**	**Completion status of non-continuous monitors this monitoring cycle:**
	Catalyst monitoring Heated catalyst monitoring Evaporative system monitoring Secondary air system monitoring A/C system refrigerant monitoring Oxygen sensor monitoring Oxygen sensor heater monitoring EGR system monitoring	0 1 2 3 4 5 6 7	See PID $01 to determine which monitors are supported. 0 =monitor disabled for rest of this monitoring cycle (NO) 1 =monitor enabled for this monitoring cycle (YES)	CAT_CMPL: YES or NO HCATCMPL: YES or NO EVAPCMPL: YES or NO AIR_CMPL: YES or NO ACRF_CMPL: YES or NO O2S_CMPL: YES or NO HTR_CMPL: YES or NO EGR_CMPL: YES or NO

Downloaded from SAE International by Tara Casaletto, Monday, January 09, 2023

TABLE B31—PID $42 DEFINITION

PID (hex)	Description	Data byte	Min. value	Max. value	Scaling/bit	External test equipment SI (Metric) / English display
42	Control module voltage	A, B	0 V	65.535 V	0.001 V per bit	VPWR: xx.xxx V
	VPWR – power input to the control module. VPWR is normally battery voltage, less any voltage drop in the circuit between the battery and the control module. NOTE 42-volt vehicles may utilise multiple voltages for different systems on the vehicle. VPWR represents the voltage at the control module; it may be significantly different than battery voltage.					

TABLE B32—PID $43 DEFINITION

PID (hex)	Description	Data byte	Min. value	Max. value	Scaling/bit	External test equipment SI (Metric) / English display
43	Absolute Load Value	A, B	0 %	25700 %	100/255 %	LOAD_ABS: xxx.x%
	The absolute load value has some different characteristics than the LOAD_PCT defined in PID 04 This definition, although restrictive, will standardise the calculation. LOAD_ABS is the normalised value of air mass per intake stroke displayed as a percent. LOAD_ABS = [air mass (g / intake stroke)] / [1.184 (g / intake stroke) * cylinder displacement in litres] Derivation: — air mass (g / intake stroke) = [total engine air mass (g/sec)] / [rpm (revs/min)* (1 min / 60 sec) * (1/2 # of cylinders (strokes / rev)], — LOAD_ABS = [air mass (g)/intake stroke] / [maximum air mass (g)/intake stroke at WOT@STP at 100% volumetric efficiency] * 100%. Where: — STP = Standard Temperature and Pressure = 25 °C, 29.92 in Hg (101.3 kPa) BARO, WOT = wide open throttle. The quantity (maximum air mass (g)/intake stroke at WOT@STP at 100% volumetric efficiency) is a constant for a given cylinder swept volume. The constant is 1.184 (g/litre 3) * cylinder displacement (litre 3/intake stroke) based on air density at STP. Characteristics of LOAD_ABS are: — Ranges from 0 to approximately 0.95 for naturally aspirated engines, 0 – 4 for boosted engines, — Linearly correlated with engine indicated and brake torque, — Often used to schedule spark and EGR rates, — Peak value of LOAD_ABS correlates with volumetric efficiency at WOT., — Indicates the pumping efficiency of the engine for diagnostic purposes. Spark ignition engine are required to support PID $43. Compression ignition (diesel) engines are not required to support this PID. NOTE See PID $04 for an additional definition of engine LOAD.					

Downloaded from SAE International by Tara Casaletto, Monday, January 09, 2023

TABLE B33—PID $44 DEFINITION

PID (hex)	Description	Data byte	Min. value	Max. value	Scaling/bit	External test equipment SI (Metric) / English display
44	Commanded Equivalence Ratio	A, B	0	1.999	0.0000305	EQ_RAT: x.xxx
	Fuel systems that utilise conventional oxygen sensor shall display the commanded open loop equivalence ratio while the fuel control system is in open loop. EQ_RAT shall indicate 1.0 while in closed loop fuel. Fuel systems that utilise wide-range/linear oxygen sensors shall display the commanded equivalence ratio in both open loop and closed loop operation. To obtain the actual A/F ratio being commanded, multiply the stoichiometric A/F ratio by the equivalence ratio. For example, for gasoline, stoichiometric is 14.64:1 ratio. If the fuel control system was commanding an 0.95 EQ_RAT, the commanded A/F ratio to the engine would be 14.64 * 0.95 = 13.9 A/F					

TABLE B34—PID $45 DEFINITION

PID (hex)	Description	Data byte	Min. value	Max. value	Scaling/bit	External test equipment SI (Metric) / English display
45	Relative Throttle Position	A	0 %	100 %	100/255 %	TP_R: xxx.x %
	Relative or "learned" throttle position shall be displayed as a normalised value, scaled from 0 to 100%. TP_R should display a value of 0% at the "learned closed-throttle position. For example, if a 0 to 5.0 volt sensor is used (uses a 5.0 volt reference voltage), and the closed throttle position is a 1.0 volts, TP shall display (1.0 – 1.0 / 5.0) = 0% at closed throttle and 30% at 2.5 volts. Because of the closed-throttle offset, wide open throttle will usually indicate substantially less than 100%. For systems where the output is proportional to the input voltage, this value is the percent of maximum input reference voltage. For systems where the output is inversely proportional to the input voltage, this value is 100% minus the percent of maximum input reference voltage. See PID $11 for a definition of Absolute Throttle Position.					

TABLE B35—PID $46 DEFINITION

PID (hex)	Description	Data byte	Min. value	Max. value	Scaling/bit	External test equipment SI (Metric) / English display
46	Ambient air temperature (same scaling as IAT - $0F)	A	–40 °C	+215 °C	1 °C with –40 °C offset	AAT: xxx °C / xxx °F
	AAT shall display ambient air temperature, if utilised by the control module strategy for OBD monitoring. AAT may be obtained directly from a sensor, may be obtained indirectly via the vehicle serial data communication bus, or may be inferred by the control strategy using other sensor inputs.					

TABLE B36—PID $47 DEFINITION

PID (hex)	Description	Data byte	Min. value	Max. value	Scaling/bit	External test equipment SI (Metric) / English display
47	Absolute Throttle Position B	A	0 %	100 %	100/255 %	TP_B: xxx.x %
	Absolute throttle position B, if utilised by the control module, (not “relative” or “learned” throttle position) shall be displayed as a normalised value, scaled from 0 to 100%. For example, if a 0 to 5.0 volt sensor is used (uses a 5.0 volt reference voltage), and the closed throttle position is a 1.0 volts, TP_B shall display (1.0 / 5.0) = 20% at closed throttle and 50% at 2.5 volts. Throttle position at idle will usually indicate greater than 0%, and throttle position at wide open throttle will usually indicate less than 100%. For systems where the output is proportional to the input voltage, this value is the percent of maximum input reference voltage. For systems where the output is inversely proportional to the input voltage, this value is 100% minus the percent of maximum input reference voltage.					

Downloaded from SAE International by Tara Casaletto, Monday, January 09, 2023

TABLE B37—PID $48 DEFINITION

PID (hex)	Description	Data byte	Min. value	Max. value	Scaling/bit	External test equipment SI (Metric) / English display
48	Absolute Throttle Position C	A	0 %	100 %	100/255 %	TP_C: xxx.x %
	Absolute throttle position C, if utilised by the control module, (not “relative” or “learned” throttle position) shall be displayed as a normalised value, scaled from 0 to 100%. For example, if a 0 to 5.0 volt sensor is used (uses a 5.0 volt reference voltage), and the closed throttle position is a 1.0 volts, TP_C shall display (1.0 / 5.0) = 20% at closed throttle and 50% at 2.5 volts. Throttle position at idle will usually indicate greater than 0%, and throttle position at wide open throttle will usually indicate less than 100%. For systems where the output is proportional to the input voltage, this value is the percent of maximum input reference voltage. For systems where the output is inversely proportional to the input voltage, this value is 100% minus the percent of maximum input reference voltage.					

TABLE B38—PID $49 DEFINITION

PID (hex)	Description	Data byte	Min. value	Max. value	Scaling/bit	External test equipment SI (Metric) / English display
49	Accelerator Pedal Position D	A	0 %	100 %	100/255 %	APP_D: xxx.x %
	Accelerator Pedal Position D, if utilised by the control module, (not “relative” or “learned” pedal position) shall be displayed as a normalised value, scaled from 0 to 100%. For example, if a 0 to 5.0 volt sensor is used (uses a 5.0 volt reference voltage), and the closed pedal is 1.0 volt, APP_D shall display (1.0 / 5.0) = 20% at closed pedal and 50% at 2.5 volts. Pedal position at idle will usually indicate greater than 0%, and pedal position at wide open pedal will usually indicate less than 100%. For systems where the output is proportional to the input voltage, this value is the percent of maximum input reference voltage. For systems where the output is inversely proportional to the input voltage, this value is 100% minus the percent of maximum input reference voltage.					

TABLE B39—PID $4A DEFINITION

PID (hex)	Description	Data byte	Min. value	Max. value	Scaling/bit	External test equipment SI (Metric) / English display
4A	Accelerator Pedal Position E	A	0 %	100 %	100/255 %	APP_E: xxx.x %
	Accelerator Pedal Position E, if utilised by the control module, (not “relative” or “learned” pedal position) shall be displayed as a normalised value, scaled from 0 to 100%. For example, if a 0 to 5.0 volt sensor is used (uses a 5.0 volt reference voltage), and the closed pedal is 1.0 volt, APP_E shall display (1.0 / 5.0) = 20% at closed pedal and 50% at 2.5 volts. Pedal position at idle will usually indicate greater than 0%, and pedal position at wide open pedal will usually indicate less than 100%. For systems where the output is proportional to the input voltage, this value is the percent of maximum input reference voltage. For systems where the output is inversely proportional to the input voltage, this value is 100% minus the percent of maximum input reference voltage.					

Downloaded from SAE International by Tara Casaletto, Monday, January 09, 2023

TABLE B40—PID $4B DEFINITION

PID (hex)	Description	Data byte	Min. value	Max. value	Scaling/bit	External test equipment SI (Metric) / English display
4B	Accelerator Pedal Position F	A	0 %	100 %	100/255 %	APP_F: xxx.x %
	Accelerator Pedal Position F, if utilised by the control module, (not “relative” or “learned” pedal position) shall be displayed as a normalised value, scaled from 0 to 100%. For example, if a 0 to 5.0 volt sensor is used (uses a 5.0 volt reference voltage), and the closed pedal is 1.0 volt, APP_F shall display (1.0 / 5.0) = 20% at closed pedal and 50% at 2.5 volts. Pedal position at idle will usually indicate greater than 0%, and pedal position at wide open pedal will usually indicate less than 100%. For systems where the output is proportional to the input voltage, this value is the percent of maximum input reference voltage. For systems where the output is inversely proportional to the input voltage, this value is 100% minus the percent of maximum input reference voltage.					

TABLE B41—PID $4C DEFINITION

PID (hex)	Description	Data byte	Min. value	Max. value	Scaling/bit	External test equipment SI (Metric) / English display
4C	Commanded Throttle Actuator Control	A	0% (closed throttle)	100% (wide open throttle)	100/255 %	TAC_PCT: xxx.x%
	Commanded TAC displayed as a percent. TAC_PCT shall be normalised to the maximum TAC commanded output control parameter. TAC systems use a variety of methods to control the amount of throttle opening. 1) If a linear or stepper motor is used, the fully closed throttle position shall be displayed as 0%, the fully open throttle position shall be displayed as 100%. Intermediate positions shall be displayed as a percent of the full-open throttle position. For example, a stepper-motor TAC that moves the throttle from 0 to 128 counts shall display 0% at 0 counts, 100% at 128 counts and 50% at 64 counts. 2) Any other actuation method shall be normalised to display 0% when the throttle is commanded closed and 100% when the throttle is commanded open.					

TABLE B42—PID $4D DEFINITION

PID (hex)	Description	Data byte	Min. value	Max. value	Scaling/ bit	External test equipment SI (Metric) / English display
4D	Minutes run by the engine while MIL activated	A, B	0 min	65535 min 1092.25 hours	1 min per count	MIL_TIME: xxxx hrs, xx min
	Conditions for “Minutes run by the engine while MIL activated” counter: • reset to $0000 when MIL state changes from deactivated to activated by this ECU • accumulate counts in minutes if MIL is activated (ON) • do not change value while MIL is not activated (OFF) • reset to $0000 if diagnostic information is cleared either by service $04 or 40 warm-up cycles without MIL activated • do not wrap to $0000 if value is $FFFF					

Downloaded from SAE International by Tara Casaletto, Monday, January 09, 2023

TABLE B43—PID $4E DEFINITION

PID (hex)	Description	Data byte	Min. value	Max. value	Scaling/bit	External test equipment SI (Metric) / English display
4E	Time since diagnostic trouble codes cleared	A, B	0 min	65535 min 1092.25 hours	1 min per count	CLR_TIME: xxxx hrs, xx min
	Time accumulated since DTCs were cleared (via an external test equipment or possibly, a battery disconnect). This PID is not associated with any particular DTC. It is simply an indication for I/M (Inspection/Maintenance), of the last time an external test equipment was used to clear DTCs. If greater than 65,535 min have occurred, CLR_TIME shall remain at 65,535 min and not wrap to zero.					

TABLE B44—PID $4F - $FF DEFINITION

PID (hex)	Description	Data byte	Min. value	Max. value	Scaling/bit	External test equipment SI (Metric) / English display
4F - FF	Reserved by document	---	---	---	---	---

Downloaded from SAE International by Tara Casaletto, Monday, January 09, 2023

APPENDIX C

(NORMATIVE)
TIDS (TEST ID) FOR SERVICE $05 SCALING AND DEFINITION

This appendix only applies to ISO 9141-2, SAE J1850, and ISO 14230-4.

TABLE C1—TEST ID SCALING DESCRIPTION

Test ID	Description	Min. ($00)	Max. ($FF)	Scaling/bit
$01	Rich to lean sensor threshold voltage (constant)	0 V	1.275 V	0.005 V
$02	Lean to rich sensor threshold voltage (constant)	0 V	1.275 V	0.005 V
$03	Low sensor voltage for switch time calculation (constant)	0 V	1.275 V	0.005 V
$04	High sensor voltage for switch time calculation (constant)	0 V	1.275 V	0.005 V
$05	Rich to lean sensor switch time (calculated)	0 s	1.02 s	0.004 s
$06	Lean to rich sensor switch time (calculated)	0 s	1.02 s	0.004 s
$07	Minimum sensor voltage for test cycle (calculated)	0 V	1.275 V	0.005 V
$08	Maximum sensor voltage for test cycle (calculated)	0 V	1.275 V	0.005 V
$09	Time between sensor transitions (calculated)	0 s	10.2 s	0.04 s
$0A	Sensor period (calculated)	0 s	10.2 s	0.04 s
$0B-$1F	reserved - to be specified by SAE and/or ISO			
$21-$2F	manufacturer Test ID description	0 s	1.02 s	0.004 s
$30-$3F	:	0 s	10.2 s	0.04 s
$41-$4F	:	0 V	1.275 V	0.005 V
$50-$5F	:	0 V	12.75 V	0.05 V
$61-$6F	:	0 Hz	25.5 Hz	0.1 Hz
$70-$7F	:	0 counts	255 counts	1 count
$81-$9F	manufacturer Test ID description	manufacturer specific values / units		
$A1-$BF	:	:		
$C1-$DF	:	:		
$E1-$FF	:	:		

Downloaded from SAE International by Tara Casaletto, Monday, January 09, 2023

APPENDIX D

(NORMATIVE)
OBDMIDS (ON-BOARD DIAGNOSTIC MONITOR ID) DEFINITION FOR SERVICE $06

This appendix only applies to ISO 15765-4.

TABLE D1—STANDARD ON-BOARD DIAGNOSTIC MONITOR ID DEFINITION

OBDMID (Hex)	On-Board Diagnostic Monitor ID name
00	**OBD Monitor IDs supported ($01 - $20)**
01	Oxygen Sensor Monitor Bank 1 - Sensor 1
02	Oxygen Sensor Monitor Bank 1 - Sensor 2
03	Oxygen Sensor Monitor Bank 1 - Sensor 3
04	Oxygen Sensor Monitor Bank 1 - Sensor 4
05	Oxygen Sensor Monitor Bank 2 - Sensor 1
06	Oxygen Sensor Monitor Bank 2 - Sensor 2
07	Oxygen Sensor Monitor Bank 2 - Sensor 3
08	Oxygen Sensor Monitor Bank 2 - Sensor 4
09	Oxygen Sensor Monitor Bank 3 - Sensor 1
0A	Oxygen Sensor Monitor Bank 3 - Sensor 2
0B	Oxygen Sensor Monitor Bank 3 - Sensor 3
0C	Oxygen Sensor Monitor Bank 3 - Sensor 4
0D	Oxygen Sensor Monitor Bank 4 - Sensor 1
0E	Oxygen Sensor Monitor Bank 4 - Sensor 2
0F	Oxygen Sensor Monitor Bank 4 - Sensor 3
10	Oxygen Sensor Monitor Bank 4 - Sensor 4
11 - 1F	**Reserved by document for future standardization**
20	**OBD Monitor IDs supported ($21 - $40)**
21	Catalyst Monitor Bank 1
22	Catalyst Monitor Bank 2
23	Catalyst Monitor Bank 3
24	Catalyst Monitor Bank 4
25 – 30	**Reserved by document for future standardization**
31	EGR Monitor Bank 1
32	EGR Monitor Bank 2
33	EGR Monitor Bank 3
34	EGR Monitor Bank 4
35 - 38	**Reserved by document for future standardization**
39	EVAP Monitor (Cap Off)
3A	EVAP Monitor (0.090")
3B	EVAP Monitor (0.040”)
3C	EVAP Monitor (0.020”)
3D	Purge Flow Monitor
3E - 3F	**Reserved by document for future standardization**

Downloaded from SAE International by Tara Casaletto, Monday, January 09, 2023

TABLE D1—STANDARD ON-BOARD DIAGNOSTIC MONITOR ID DEFINITION

OBDMID (Hex)	On-Board Diagnostic Monitor ID name
40	**OBD Monitor IDs supported ($41 - $60)**
41	Oxygen Sensor Heater Monitor Bank 1 - Sensor 1
42	Oxygen Sensor Heater Monitor Bank 1 - Sensor 2
43	Oxygen Sensor Heater Monitor Bank 1 - Sensor 3
44	Oxygen Sensor Heater Monitor Bank 1 - Sensor 4
45	Oxygen Sensor Heater Monitor Bank 2 - Sensor 1
46	Oxygen Sensor Heater Monitor Bank 2 - Sensor 2
47	Oxygen Sensor Heater Monitor Bank 2 - Sensor 3
48	Oxygen Sensor Heater Monitor Bank 2 - Sensor 4
49	Oxygen Sensor Heater Monitor Bank 3 - Sensor 1
4A	Oxygen Sensor Heater Monitor Bank 3 - Sensor 2
4B	Oxygen Sensor Heater Monitor Bank 3 - Sensor 3
4C	Oxygen Sensor Heater Monitor Bank 3 - Sensor 4
4D	Oxygen Sensor Heater Monitor Bank 4 - Sensor 1
4E	Oxygen Sensor Heater Monitor Bank 4 - Sensor 2
4F	Oxygen Sensor Heater Monitor Bank 4 - Sensor 3
50	Oxygen Sensor Heater Monitor Bank 4 - Sensor 4
51 - 5F	**Reserved by document for future standardization**
60	**OBD Monitor IDs supported ($61 - $80)**
61	Heated Catalyst Monitor Bank 1
62	Heated Catalyst Monitor Bank 2
63	Heated Catalyst Monitor Bank 3
64	Heated Catalyst Monitor Bank 4
65 - 70	**Reserved by document for future standardization**
71	Secondary Air Monitor 1
72	Secondary Air Monitor 2
73	Secondary Air Monitor 3
74	Secondary Air Monitor 4
75 - 7F	**Reserved by document for future standardization**
80	**OBD Monitor IDs supported ($81 - $A0)**
81	Fuel System Monitor Bank 1
82	Fuel System Monitor Bank 2
83	Fuel System Monitor Bank 3
84	Fuel System Monitor Bank 4
85 - 9F	**Reserved by document for future standardization**
A0	**OBD Monitor IDs supported ($A1 - $C0)**
A1	Mis-Fire Monitor General Data
A2	Mis-Fire Cylinder 1 Data
A3	Mis-Fire Cylinder 2 Data
A4	Mis-Fire Cylinder 3 Data
A5	Mis-Fire Cylinder 4 Data
A6	Mis-Fire Cylinder 5 Data
A7	Mis-Fire Cylinder 6 Data

Downloaded from SAE International by Tara Casaletto, Monday, January 09, 2023

TABLE D1—STANDARD ON-BOARD DIAGNOSTIC MONITOR ID DEFINITION

OBDMID (Hex)	On-Board Diagnostic Monitor ID name
A8	Mis-Fire Cylinder 7 Data
A9	Mis-Fire Cylinder 8 Data
AA	Mis-Fire Cylinder 9 Data
AB	Mis-Fire Cylinder 10 Data
AC	Mis-Fire Cylinder 11 Data
AD	Mis-Fire Cylinder 12 Data
AE - BF	**Reserved by document for future standardisation**
C0	**OBD Monitor IDs supported ($C1 - $E0)**
C1 - DF	**Reserved by document for future standardisation**
E0	**OBD Monitor IDs supported ($E1 - $FF)**
E1 - FF	**Vehicle Manufacturer defined OBDM IDs**

Oxygen Sensor and Catalyst Configuration examples

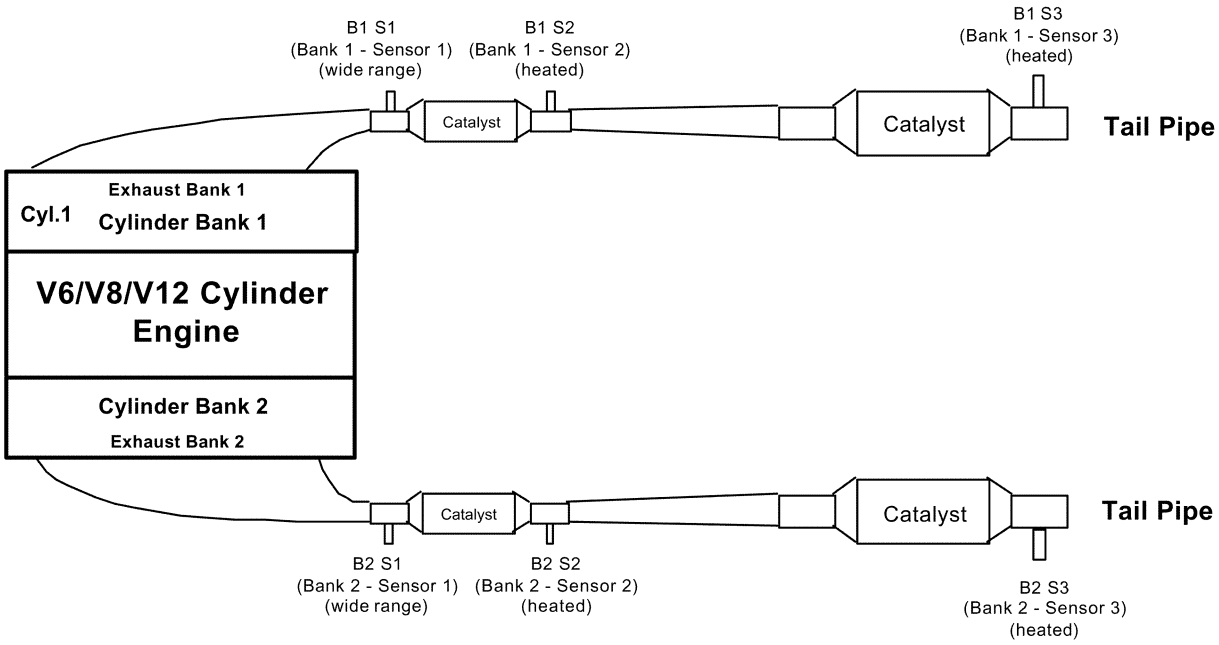

FIGURE D1—V6/V8/V12 CYLINDER ENGINE WITH 2 EXHAUST BANKS AND 4 CATALYSTS EXAMPLE

Downloaded from SAE International by Tara Casaletto, Monday, January 09, 2023

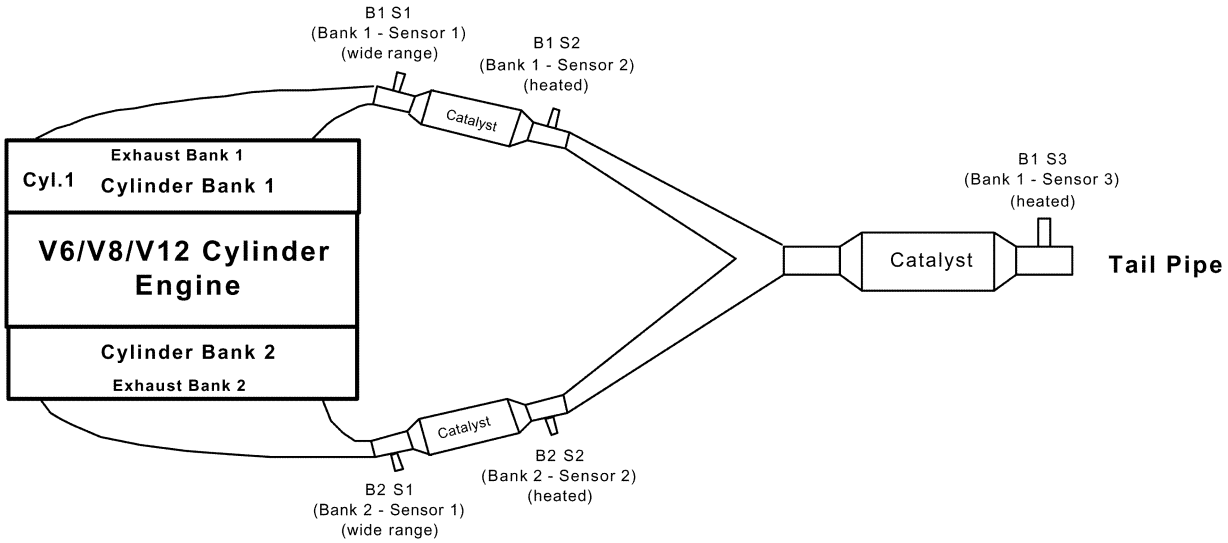

FIGURE D2—V6V8/V12 CYLINDER ENGINE WITH 2 EXHAUST BANKS AND 3 CATALYSTS EXAMPLE

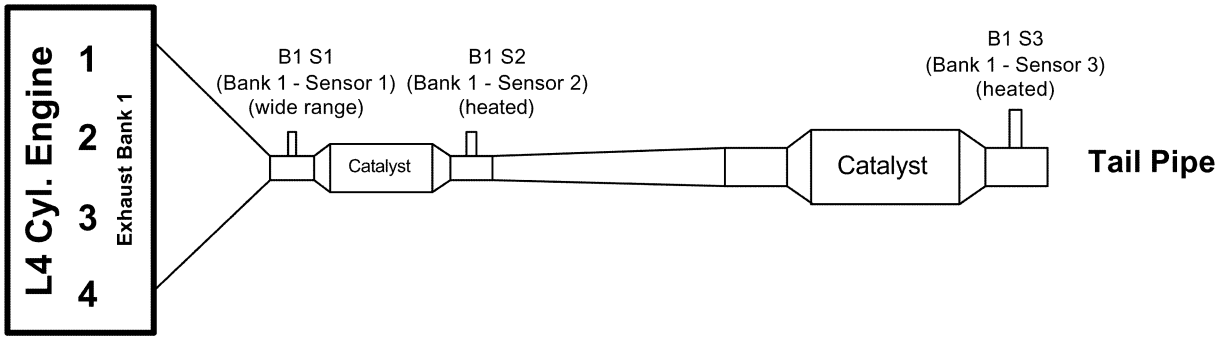

FIGURE D3—L4 CYLINDER ENGINE WITH 1 EXHAUST BANK AND 2 CATALYSTS EXAMPLE

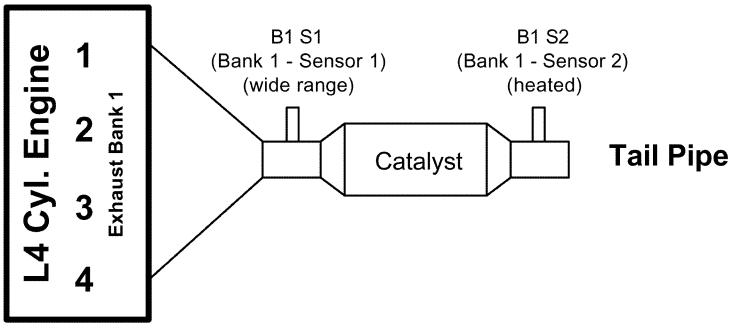

FIGURE D4—L4 CYLINDER ENGINE WITH 1 EXHAUST BANK AND 1 CATALYST EXAMPLE

Downloaded from SAE International by Tara Casaletto, Monday, January 09, 2023

APPENDIX E

(NORMATIVE)
UNIT AND SCALING ID DEFINITION FOR SERVICE $06

This appendix only applies to ISO 15765-4. The Unit and Scaling IDs are separated into two ranges, $01 - $7F are unsigned Scaling Identifiers, and $80 - $FE are signed Scaling Identifiers. Unit and Scaling IDs $00 and $FF are reserved for future definition and shall not be defined as Unit and Scaling Identifiers.

Bit 7 = '0'	**unsigned** Scaling Identifier range
Bit 7 = '1'	**signed** Scaling Identifier range

=

7	6	5	4	3	2	1	0

FIGURE E1—UNSIGNED/SIGNED SCALING IDENTIFIER RANGE ENCODING

E.1 Unsigned Unit and Scaling Identifiers definition

TABLE E1—UNIT AND SCALING ID $01 DEFINITION

Unit and Scaling ID (hex)	Description	Scaling/bit	Min. value		Max. value		External test equipment SI (metric) display
			(hex)	(dec.)	(hex)	(dec.)	
01	Raw Value	1 per bit	0000	0	FFFF	65535	xxxxx
		hex to decimal	Data Range examples:				Display examples:
		unsigned	$0000		0		0
			$FFFF		+65535		65535

TABLE E2—UNIT AND SCALING ID $02 DEFINITION

Unit and Scaling ID (hex)	Description	Scaling/bit	Min. value		Max. value		External test equipment SI (Metric) display
			(hex)	(dec.)	(hex)	(dec.)	
02	Raw Value	0.1 per bit	0000	0	FFFF	6553.5	xxxx.x
		hex to decimal	Data Range examples:				Display examples:
		unsigned	$0000		0		0.0
			$FFFF		+6553.5		6553.5

Downloaded from SAE International by Tara Casaletto, Monday, January 09, 2023

TABLE E3—UNIT AND SCALING ID $03 DEFINITION

Unit and Scaling ID (hex)	Description	Scaling/bit	Min. value		Max. value		External test equipment SI (Metric) display
			(hex)	(dec.)	(hex)	(dec.)	
03	Raw Value	0.01 per bit	0000	0	FFFF	655.35	xxx.xx
		hex to decimal	Data Range examples:				Display examples:
		unsigned	$0000		0		0.00
			$FFFF		+655.35		655.35

TABLE E4— UNIT AND SCALING ID $04 DEFINITION

Unit and Scaling ID (hex)	Description	Scaling/bit	Min. value		Max. value		External test equipment SI (Metric) display
			(hex)	(dec.)	(hex)	(dec.)	
04	Raw Value	0.001 per bit	0000	0	FFFF	65.535	xx.xxx
		hex to decimal	Data Range examples:				Display examples:
		unsigned	$0000		0		0.000
			$FFFF		+65.535		65.535

TABLE E5—UNIT AND SCALING ID $05 DEFINITION

Unit and Scaling ID (hex)	Description	Scaling/bit	Min. value		Max. value		External test equipment SI (Metric) display
			(hex)	(dec.)	(hex)	(dec.)	
05	Raw Value	0.0000305 per bit	0000	0	FFFF	1.999	x.xxx
		hex to decimal	Data Range examples:				Display examples:
		unsigned	$0000		0		0.000
			$FFFF		+1.999		1.999

TABLE E6—UNIT AND SCALING ID $06 DEFINITION

Unit and Scaling ID (hex)	Description	Scaling/bit	Min. value		Max. value		External test equipment SI (Metric) display
			(hex)	(dec.)	(hex)	(dec.)	
06	Raw Value	0.0000305 per bit	0000	0	FFFF	19.988	xx.xxx
		hex to decimal	Data Range examples:				Display examples:
		unsigned	$0000		0		0.000
			$FFFF		+19.988		19.988

Downloaded from SAE International by Tara Casaletto, Monday, January 09, 2023

TABLE E7—UNIT AND SCALING ID $07 DEFINITION

Unit and Scaling ID (hex)	Description	Scaling/bit	Min. value		Max. value		External test equipment SI (Metric) display
			(hex)	(dec.)	(hex)	(dec.)	
07	rotational	0.25 rpm per bit	0000	0 rpm	FFFF	16384 rpm	xxxxx rpm
	frequency	unsigned	Data Range examples:				Display examples:
			$0000	0 rpm			0 rpm
			$0002	+0.5 rpm			1 rpm
			$FFFC	+16383 rpm			16383 rpm
			$FFFD	+16383.25 rpm			16383 rpm
			$FFFE	+16383.50 rpm			16384 rpm
			$FFFF	+16383.75 rpm			16384 rpm

TABLE E8—UNIT AND SCALING ID $08 DEFINITION

Unit and Scaling ID (hex)	Description	Scaling/bit	Min. value		Max. value		External test equipment SI (Metric) display	
			(hex)	(dec.)	(hex)	(dec.)		
08	Speed	0.01 km/h per bit	0000	0 km/h	FFFF	655.35 km/h	xxx.xx km/h (xxx.xx mph)	
		unsigned	Data Range examples:				Display examples:	
	Conversion km/h -> mph:		$0000	0 km/h			0.00 km/h	(0.00 mph)
	1 km/h = 0.62137 mph		$0064	+1 km/h			1.00 km/h	(0.62 mph)
			$03E7	+9.99 km/h			9.99 km/h	(6.21 mph)
			$FFFF	+655.35 km/h			655.35 km/h	(407.21 mph)

TABLE E9—UNIT AND SCALING ID $09 DEFINITION

Unit and Scaling ID (hex)	Description	Scaling/bit	Min. value		Max. value		External test equipment SI (Metric) display	
			(hex)	(dec.)	(hex)	(dec.)		
09	Speed	1 km/h per bit	0000	0 km/h	FFFF	65535 km/h	xxxxx km/h (xxxxx mph)	
		unsigned	Data Range examples:				Display examples:	
	Conversion km/h -> mph:		$0000	0 km/h			0 km/h	(0 mph)
	1 km/h = 0.62137 mph		$0064	+100 km/h			100 km/h	(62 mph)
			$03E7	+999 km/h			999 km/h	(621 mph)
			$FFFF	+65535 km/h			65535 km/h	(40721 mph)

Downloaded from SAE International by Tara Casaletto, Monday, January 09, 2023

TABLE E10—UNIT AND SCALING ID $0A DEFINITION

Unit and Scaling ID (hex)	Description	Scaling/bit	Min. value		Max. value		External test equipment SI (Metric) display
			(hex)	(dec.)	(hex)	(dec.)	
0A	Voltage	0.122 mV per bit	0000	0 V	FFFF	7.99 V	x.xxxx V
		unsigned	Data Range examples:				Display examples:
	Conversion mV -> V:		$0000		0 mV		0.0000 V
	1000 mV = 1 V		$0001		+0.122 mV		0.0001 V
			$2004		+999.912 mV		0.9999 V
			$FFFF		+7995 mV		7.9953 V

TABLE E11—UNIT AND SCALING ID $0B DEFINITION

Unit and Scaling ID (hex)	Description	Scaling/bit	Min. value		Max. value		External test equipment SI (Metric) display
			(hex)	(dec.)	(hex)	(dec.)	
0B	Voltage	0.001 V per bit	0000	0 V	FFFF	65.535 V	xx.xxx V
		unsigned	Data Range examples:				Display examples:
	Conversion mV -> V:		$0000		0 mV		0.000 V
	1000 mV = 1 V		$0001		+1 mV		0.001 V
			$FFFF		+65535 mV		65.535 V

TABLE E12—UNIT AND SCALING ID $0C DEFINITION

Unit and Scaling ID (hex)	Description	Scaling/bit	Min. value		Max. value		External test equipment SI (Metric) display
			(hex)	(dec.)	(hex)	(dec.)	
0C	Voltage	0.01 V per bit	0000	0 V	FFFF	655.35 V	xxx.xxx V
		unsigned	Data Range examples:				Display examples:
	Conversion mV -> V:		$0000		0 mV		0.000 V
	1000 mV = 1 V		$0001		+10 mV		0.010 V
			$FFFF		+655350 mV		655.350 V

Downloaded from SAE International by Tara Casaletto, Monday, January 09, 2023

TABLE E13—UNIT AND SCALING ID $0D DEFINITION

Unit and Scaling ID (hex)	Description	Scaling/bit	Min. value		Max. value		External test equipment SI (Metric) display
			(hex)	(dec.)	(hex)	(dec.)	
0D	Current	0.00390625 mA	0000	0 A	FFFF	255.996 mA	xxx.xxx mA
		per bit, unsigned	Data Range examples:				Display examples:
			$0000		0 mA		0.000 mA
			$0001		0.004 mA		0.004 mA
			$8000		+128 mA		128.000 mA
			$FFFF		+255.996 mA		255.996 mA

TABLE E14—UNIT AND SCALING ID $0E DEFINITION

Unit and Scaling ID (hex)	Description	Scaling/bit	Min. value		Max. value		External test equipment SI (Metric) display
			(hex)	(dec.)	(hex)	(dec.)	
0E	Current	0.001 A per bit	0000	0 A	FFFF	65.535 A	xx.xxx A
		unsigned	Data Range examples:				Display examples:
	Conversion mA -> A:		$0000		0 A		0.000 A
	1000 mA = 1 A		$8000		+32.768 A		32.768 A
			$FFFF		+65.535 A		65.535 A

TABLE E15—UNIT AND SCALING ID $0F DEFINITION

Unit and Scaling ID (hex)	Description	Scaling/bit	Min. value		Max. value		External test equipment SI (Metric) display
			(hex)	(dec.)	(hex)	(dec.)	
0F	Current	0.01 A per bit	0000	0 A	FFFF	655.35 A	xxx.xxx A
		unsigned	Data Range examples:				Display examples:
	Conversion mA -> A:		$0000		0 mA		0.000 A
	1000 mA = 1 A		$0001		+10 mA		0.010 A
			$FFFF		+655350 mA		655.350 A

Downloaded from SAE International by Tara Casaletto, Monday, January 09, 2023

TABLE E16—UNIT AND SCALING ID $10 DEFINITION

Unit and Scaling ID (hex)	Description	Scaling/bit	Min. value		Max. value		External test equipment SI (Metric) display
			(hex)	(dec.)	(hex)	(dec.)	
10	Time	1 ms per bit	0000	0 ms	FFFF	65535 ms	xx.xxx s (x min, xx s)
		unsigned	Data Range examples:				Display examples:
	Conversion s -> min -> h:		$0000		0 ms		0.000 s (0 min, 0 s)
	60 s = 1 min		$8000		+32768 ms		32.768 s (0 min, 33 s)
	60 min = 1 h		$EA60		+60000 ms (1 min)		60.000 s (1 min, 0 s)
			$FFFF		+65535 ms (1 min, 6 s)		65.535 s (1 min, 6 s)

TABLE E17—UNIT AND SCALING ID $11 DEFINITION

Unit and Scaling ID (hex)	Description	Scaling/bit	Min. value		Max. value		External test equipment SI (Metric) display
			(hex)	(dec.)	(hex)	(dec.)	
11	Time	100 ms per bit	0000	0 s	FFFF	6553.5 s	xxxx.x s (x h, x min, xx s)
		unsigned	Data Range examples:				Display examples:
	Conversion s -> min -> h:		$0000		0 s		0.000 s (0 h, 0 min, 0 s)
	60 s = 1 min		$8000		+3276.8 s		3276.8 s (0 h, 54 min, 37 s)
	60 min = 1 h		$EA60		+6000 s (1 h 40 min)		6000 s (1 h, 40 min, 0 s)
			$FFFF		+6553.5 s (1 hr, 49 min, 13 s)		6553.5 s (1 h, 49 min, 13 s)

TABLE E18—UNIT AND SCALING ID $12 DEFINITION

Unit and Scaling ID (hex)	Description	Scaling/bit	Min. value		Max. value		External test equipment SI (Metric) display
			(hex)	(dec.)	(hex)	(dec.)	
12	Time	1 second per bit	0000	0 s	FFFF	65535 s	xxxxx s (xx h, xx min, xx s)
		unsigned	Data Range examples:				Display examples:
	Conversion s -> min -> h:		$0000		0 s		0 s (0 h, 0 min, 0 s)
	60 s = 1 min		$003C		+60 s		60 s (0 h, 1 min, 0 s)
	60 min = 1 h		$0E10		+3600 s		3600 s (1 h, 0 min, 0 s)
			$FFFF		+65535 s		65535 s (18 h, 12 min, 15 s)

Downloaded from SAE International by Tara Casaletto, Monday, January 09, 2023

TABLE E19—UNIT AND SCALING ID $13 DEFINITION

Unit and Scaling ID (hex)	Description	Scaling/bit	Min. value		Max. value		External test equipment SI (Metric) display
			(hex)	(dec.)	(hex)	(dec.)	
13	Resistance	1 mOhm per bit	0000	0 mOhm	FFFF	65535 mOhm	xx.xxx Ohm
		unsigned	Data Range examples:				Display examples:
	Conversion mOhm -> Ohm:		$0000		0 mOhm		0.000 Ohm
	1000 mOhm = 1 Ohm		$0001		+1 mOhm		0.001 Ohm
			$8000		+32768 mOhm		32.768 Ohm
			$FFFF		+65535 mOhm		65.535 Ohm

TABLE E20—UNIT AND SCALING ID $14 DEFINITION

Unit and Scaling ID (hex)	Description	Scaling/bit	Min. value		Max. value		External test equipment SI (Metric) display
			(hex)	(dec.)	(hex)	(dec.)	
14	Resistance	1 Ohm per bit	0000	0 Ohm	FFFF	65535 Ohm	xx.xxx kOhm
		unsigned	Data Range examples:				Display examples:
	Conversion Ohm -> kOhm:		$0000		0 Ohm		0.000 kOhm
	1000 Ohm = 1 kOhm		$0001		+1 Ohm		0.001 kOhm
			$8000		+32768 Ohm		32.768 kOhm
			$FFFF		+65535 Ohm		65.535 kOhm

TABLE E21—UNIT AND SCALING ID $15 DEFINITION

Unit and Scaling ID (hex)	Description	Scaling/bit	Min. value		Max. value		External test equipment SI (Metric) display
			(hex)	(dec.)	(hex)	(dec.)	
15	Resistance	1 kOhm per bit	0000	0 kOhm	FFFF	65535 kOhm	xxxxx kOhm
		unsigned	Data Range examples:				Display examples:
			$0000		0 kOhm		0 kOhm
			$0001		+1 kOhm		1 kOhm
			$8000		+32768 kOhm		32768 kOhm
			$FFFF		+65535 kOhm		65535 kOhm

Downloaded from SAE International by Tara Casaletto, Monday, January 09, 2023

TABLE E22—UNIT AND SCALING ID $16 DEFINITION

Unit and Scaling ID (hex)	Description	Scaling/bit	Min. value		Max. value		External test equipment SI (Metric) display	
			(hex)	(dec.)	(hex)	(dec.)		
16	Temperature	(0.1 °C per bit) - 40 °C unsigned	0000	–40 °C	FFFF	+6513.5 °C	xxxx.x °C (xxxx.x °F)	
			Data Range examples:				Display examples:	
			$0000	–40 °C			–40.0 °C	(–40.0 °F)
	Conversion °C -> °F:		$0001	–39.9 °C			–39.9 °C	(–39.8 °F)
	°F = °C * 1.8 + 32 °C		$00DC	–18.0 °C			–18.0 °C	(–0.4 °F)
			$0190	0 °C			0.0 °C	(32.0 °F)
			$FFFF	+6513.5 °C			6513.5 °C	(11756.3 °F)

TABLE E23—UNIT AND SCALING ID $17 DEFINITION

Unit and Scaling ID (hex)	Description	Scaling/bit	Min. value		Max. value		External test equipment SI (Metric) display	
			(hex)	(dec.)	(hex)	(dec.)		
17	Pressure (Gauge)	0.01 kPa per bit unsigned	0000	0 kPa	FFFF	655.35 kPa	xxx.xx kPa (Gauge) (xx.x PSI)	
Conversion kPa -> PSI:			Data Range examples:				Display examples:	
1 kPa (10 HPa) = 0.1450377 PSI			$0000	0 kPa			0.00 kPa	(0.0 PSI)
Additional Conversions:			$0001	+0.01 kPa			0.01 kPa	(0.0 PSI)
1 kPa = 4.0146309 inH2O 1 kPa = 101.9716213 mmH2O (millimeter of water) 1 kPa = 7.5006151 mmHg (millimeter of mercury) 1 kPa = 0.010 bar			$FFFF	+655.35 kPa			655.35 kPa	(95.1 PSI)

TABLE E24—UNIT AND SCALING ID $18 DEFINITION

Unit and Scaling ID (hex)	Description	Scaling/bit	Min. value		Max. value		External test equipment SI (Metric) display	
			(hex)	(dec.)	(hex)	(dec.)		
18	Pressure (Air pressure)	0.0117 kPa per bit unsigned	0000	0 kPa	FFFF	766.76 kPa	xxx.xxx kPa (Air) (xxx.x PSI)	
Conversion kPa -> PSI:			Data Range examples:				Display examples:	
1 kPa (10 HPa) = 0.1450377 PSI			$0000	0 kPa			0.000 kPa	(0.0 PSI)
Additional Conversions:			$0001	+0.0117 kPa			0.012 kPa	(0.0 PSI)
1 kPa = 4.0146309 inH2O 1 kPa = 101.9716213 mmH2O (millimeter of water) 1 kPa = 7.5006151 mmHg (millimeter of mercury) 1 kPa = 0.010 bar			$FFFF	+766.7595 kPa			766.760 kPa	(111.2 PSI)

Downloaded from SAE International by Tara Casaletto, Monday, January 09, 2023

TABLE E25—UNIT AND SCALING ID $19 DEFINITION

Unit and Scaling ID (hex)	Description	Scaling/bit	Min. value		Max. value		External test equipment SI (Metric) display
			(hex)	(dec.)	(hex)	(dec.)	
19	Pressure (Fuel pressure)	0.079 kPa per bit unsigned	0000	0 kPa	FFFF	5177.27 kPa	xxxx.xxx kPa (Gauge) (xxx.x PSI)

Conversion kPa -> PSI:	Data Range examples:		Display examples:	
1 kPa (10 HPa) = 0.1450377 PSI	$0000	0 kPa	0.000 kPa	(0.0 PSI)
Additional Conversions:	$0001	+0.079 kPa	0.079 kPa	(0.0 PSI)
1 kPa = 4.0146309 inH2O 1 kPa = 101.9716213 mmH2O (millimeter of water) 1 kPa = 7.5006151 mmHg (millimeter of mercury) 1 kPa = 0.010 bar	$FFFF	+5177.265 kPa	5177.265 kPa	(750.9 PSI)

TABLE E26—UNIT AND SCALING ID $1A DEFINITION

Unit and Scaling ID (hex)	Description	Scaling/bit	Min. value		Max. value		External test equipment SI (Metric) display
			(hex)	(dec.)	(hex)	(dec.)	
1A	Pressure (Gauge)	1 kPa per bit unsigned	0000	0 kPa	FFFF	65535 kPa	xxxxx kPa (Gauge) (xxxx.x PSI)

Conversion kPa -> PSI:	Data Range examples:		Display examples:	
1 kPa (10 HPa) = 0.1450377 PSI	$0000	0 kPa	0 kPa	(0.0 PSI)
Additional Conversions:	$0001	+1 kPa	1 kPa	(0.1 PSI)
1 kPa = 4.0146309 inH2O 1 kPa = 101.9716213 mmH2O (millimeter of water) 1 kPa = 7.5006151 mmHg (millimeter of mercury) 1 kPa = 0.010 bar	$FFFF	+65535 kPa	65535 kPa	(9505.0 PSI)

TABLE E27—UNIT AND SCALING ID $1B DEFINITION

Unit and Scaling ID (hex)	Description	Scaling/bit	Min. value		Max. value		External test equipment SI (Metric) display
			(hex)	(dec.)	(hex)	(dec.)	
1B	Pressure (Diesel Pressure)	10 kPa per bit unsigned	0000	0 kPa	FFFF	655350 kPa	xxxxxx kPa (Gauge) (xxxxx.x PSI)

Conversion kPa -> PSI:	Data Range examples:		Display examples:	
1 kPa (10 HPa) = 0.1450377 PSI	$0000	0 kPa	0 kPa	(0.0 PSI)
Additional Conversions:	$0001	+10 kPa	10 kPa	(1.5 PSI)
1 kPa = 4.0146309 inH2O 1 kPa = 101.9716213 mmH2O (millimeter of water) 1 kPa = 7.5006151 mmHg (millimeter of mercury) 1 kPa = 0.010 bar	$FFFF	+655350 kPa	655350 kPa	(95050.0 PSI)

Downloaded from SAE International by Tara Casaletto, Monday, January 09, 2023

TABLE E28—UNIT AND SCALING ID $1C DEFINITION

Unit and Scaling ID (hex)	Description	Scaling/bit	Min. value		Max. value		External test equipment SI (Metric) display
			(hex)	(dec.)	(hex)	(dec.)	
1C	Angle	0.01 ° per bit	0000	0 °	FFFF	655.35 °	xxx.xx °
		unsigned	Data Range examples:				Display examples:
			$0000		0 °		0.00 °
			$0001		+0.01 °		0.01 °
			$8CA0		+360 °		360.00 °
			$FFFF		+655.35 °		655.35 °

TABLE E29—UNIT AND SCALING ID $1D DEFINITION

Unit and Scaling ID (hex)	Description	Scaling/bit	Min. value		Max. value		External test equipment SI (Metric) display
			(hex)	(dec.)	(hex)	(dec.)	
1D	Angle	0.5 ° per bit	0000	0 °	FFFF	32767.5 °	xxxx.x °
		unsigned	Data Range examples:				Display examples:
			$0000		0 °		0 °
			$0001		0.5 °		0.5 °
			$FFFF		32767.5 °		32767.5 °

TABLE E30—UNIT AND SCALING ID $1E DEFINITION

Unit and Scaling ID (hex)	Description	Scaling/bit	Min. value		Max. value		External test equipment SI (Metric) display
			(hex)	(dec.)	(hex)	(dec.)	
1E	Equivalence ratio (lambda)	0.0000305 per bit unsigned	0000	0	FFFF	1.999	x.xxx lambda
			Data Range examples:				Display examples:
	measured Air/Fuel ratio divided by the stoichiometric Air/Fuel ratio (14.64 for gasoline)		$0000		0		0.000 lambda
			$8013		1		1.000 lambda
			$FFFF		1.999		1.999 lambda

Downloaded from SAE International by Tara Casaletto, Monday, January 09, 2023

TABLE E31—UNIT AND SCALING ID $1F DEFINITION

Unit and Scaling ID (hex)	Description	Scaling/bit	Min. value		Max. value		External test equipment SI (Metric) display
			(hex)	(dec.)	(hex)	(dec.)	
1F	Air/Fuel	0.05 per bit	0000	0	FFFF	3276.75	xxxx.xx A/F ratio
	Ratio	unsigned	Data Range examples:				Display examples:
	measured Air/Fuel ratio NOT		$0000		0		0.00 A/F ratio
	divided by the stoichiometric		$0001		0.05		0.05 A/F ratio
	Air/Fuel ratio (14.64 for gasoline)		$0014		1.00		1.00 A/F ratio
			$0126		14.7		14.70 A/F ratio
			$FFFF		3276.75		3276.75 A/F ratio

TABLE E32—UNIT AND SCALING ID $20 DEFINITION

Unit and Scaling ID (hex)	Description	Scaling/bit	Min. value		Max. value		External test equipment SI (Metric) display
			(hex)	(dec.)	(hex)	(dec.)	
20	Ratio	0.0039062 per bit	0000	0	FFFF	255.993	xxx.xxx
		unsigned	Data Range examples:				Display examples:
			$0000		0		0.000
			$0001		0.0039062		0.004
			$FFFF		255.993		255.993

TABLE E33—UNIT AND SCALING ID $21 DEFINITION

Unit and Scaling ID (hex)	Description	Scaling/bit	Min. value		Max. value		External test equipment SI (Metric) display
			(hex)	(dec.)	(hex)	(dec.)	
21	Frequency	1 mHz per bit	0000	0	FFFF	65.535	xx.xxx Hz
		unsigned	Data Range examples:				Display examples:
	Conversion mHz -> Hz -> kHz:		$0000		0 mHz		0.000 Hz
	1000 mHz = 1 Hz		$8000		32768 mHz		32.768 Hz
			$FFFF		65535 mHz		65.535 Hz

Downloaded from SAE International by Tara Casaletto, Monday, January 09, 2023

TABLE E34—UNIT AND SCALING ID $22 DEFINITION

Unit and Scaling ID (hex)	Description	Scaling/bit	Min. value		Max. value		External test equipment SI (Metric) display
			(hex)	(dec.)	(hex)	(dec.)	
22	Frequency	1 Hz per bit	0000	0 Hz	FFFF	65535 Hz	xxxxx Hz
		unsigned	Data Range examples:				Display examples:
	Conversion Hz -> KHz -> MHz:		$0000		0 Hz		0 Hz
	1000 Hz = 1 KHz		$8000		32768 Hz		32768 Hz
	1000 KHz = 1 MHz		$FFFF		65535 Hz		65535 Hz

TABLE E35—UNIT AND SCALING ID $23 DEFINITION

Unit and Scaling ID (hex)	Description	Scaling/bit	Min. value		Max. value		External test equipment SI (Metric) display
			(hex)	(dec.)	(hex)	(dec.)	
23	Frequency	1 KHz per bit	0000	0 KHz	FFFF	65535 KHz	xx.xxx MHz
		unsigned	Data Range examples:				Display examples:
	Conversion Hz -> KHz -> MHz:		$0000		0 KHz		0.000 MHz
	1000 Hz = 1 KHz		$8000		32768 KHz		32.768 MHz
	1000 KHz = 1 MHz		$FFFF		65535 KHz		65.535 MHz

TABLE E36—UNIT AND SCALING ID $24 DEFINITION

Unit and Scaling ID (hex)	Description	Scaling/bit	Min. value		Max. value		External test equipment SI (Metric) display
			(hex)	(dec.)	(hex)	(dec.)	
24	Counts	1 count per bit	0000	0 counts	FFFF	65535	xxxxx counts
		unsigned	Data Range examples:				Display examples:
			$0000		0 counts		0 counts
			$FFFF		65535 counts		65535 counts

TABLE E37—UNIT AND SCALING ID $25 DEFINITION

Unit and Scaling ID (hex)	Description	Scaling/bit	Min. value		Max. value		External test equipment SI (Metric) display
			(hex)	(dec.)	(hex)	(dec.)	
25	Distance	1 km per bit	0000	0	FFFF	65535	xxxxx km (xxxxx miles)
		unsigned	Data Range examples:				Display examples:
	Conversion km -> mile:		$0000		0 km		0 km (0 miles)
	1 km = 0.62137 miles		$FFFF		65535 km		65535 km (40721 miles)

Downloaded from SAE International by Tara Casaletto, Monday, January 09, 2023

TABLE E38—UNIT AND SCALING ID $26 DEFINITION

Unit and Scaling ID (hex)	Description	Scaling/bit	Min. value		Max. value		External test equipment SI (Metric) display
			(hex)	(dec.)	(hex)	(dec.)	
26	Voltage per time	0.1 mV/ms per bit	0000	0 V/ms	FFFF	6.5535 V/ms	xx.xxxx V/ms
		unsigned	Data Range examples:				Display examples:
	Conversion mV/ms -> V/ms:		$0000		0 mV/ms		0.0000 V/ms
	1000 mV/ms = 1 V/ms		$0001		0.1 mV/ms		0.0001 V/ms
			$FFFF		+6553.5 mV/ms		6.5535 V/ms

TABLE E39—UNIT AND SCALING ID $27 DEFINITION

Unit and Scaling ID (hex)	Description	Scaling/bit	Min. value		Max. value		External test equipment SI (Metric) display	
			(hex)	(dec.)	(hex)	(dec.)		
27	Weight per time	0.01 g/s per bit	0000	0 g/s	FFFF	655.35 g/s	xxx.xx g/s (x.xxx lb/s)	
		unsigned	Data Range examples:				Display examples:	
	Conversion g/s -> lb/s:		$0000		0 g/s		0.00 g/s	(0.00 lb/s)
	1 g/s = 0.0022046 lb/s		$0001		+0.01 g/s		0.01 g/s	(0.00 lb/s)
			$FFFF		+655.35 g/s		655.35 g/s	(1.445 lb/s)

TABLE E40—UNIT AND SCALING ID $28 DEFINITION

Unit and Scaling ID (hex)	Description	Scaling/bit	Min. value		Max. value		External test equipment SI (Metric) display	
			(hex)	(dec.)	(hex)	(dec.)		
28	Weight per time	1 g/s per bit	0000	0 g/s	FFFF	65535 g/s	xxxxx g/s (xxx.xx lb/s)	
		unsigned	Data Range examples:				Display examples:	
	Conversion g/s -> lb/s:		$0000		0 g/s		0 g/s	(0.00 lb/s)
	1 g/s = 0.0022046 lb/s		$0001		+1 g/s		1 g/s	(0.00 lb/s)
			$FFFF		+65535 g/s		65535 g/s	(144.48 lb/s)

Downloaded from SAE International by Tara Casaletto, Monday, January 09, 2023

TABLE E41—UNIT AND SCALING ID $29 DEFINITION

Unit and Scaling ID (hex)	Description	Scaling/bit	Min. value		Max. value		External test equipment SI (Metric) display
			(hex)	(dec.)	(hex)	(dec.)	
29	Pressure per time	0.25 Pa/s per bit unsigned	0000	0 kPa/s	FFFF	16.384 kPa/s	xx.xxx kPa/s (xx.xxx inH2O/s)
Conversion inH2O/s -> kPa/s:			Data Range examples:				Display examples:
1 inH2O/s = 0.2490889 kPa/s			$0000	0 Pa/s	0 inH2O/s		0.000 kPa/s (0.000 inH2O/s)
(inch of water) 1 inH2O = 249.0889 Pa			$0004	+1 Pa/s	+4.015 inH2O/s		0.001 kPa/s (4.002 inH2O/s)
(millimeter of water) 1 mmH2O = 9.80665 Pa (millimeter of mercury) 1 mmHg = 133.3224 Pa			$FFFF	+16384 Pa/s	+65.5348 inH2O/s		16.384 kPa/s (65.775 inH2O/s)

TABLE E42—UNIT AND SCALING ID $2A DEFINITION

Unit and Scaling ID (hex)	Description	Scaling/bit	Min. value		Max. value		External test equipment SI (Metric) display
			(hex)	(dec.)	(hex)	(dec.)	
2A	Weight per time	0.001 kg/h per bit	0000	0 kg/h	FFFF	65.535 kg/s	xx.xxx kg/h
		unsigned	Data Range examples:				Display examples:
	Conversion lbs/s -> kg/h:		$0000		0 kg/h		0.000 kg/h
	1 lbs/s = 0.4535924 kg/h		$0001		+0.001 kg/h		0.001 kg/h
			$FFFF		+65.535 kg/h		65.535 kg/h

TABLE E43—UNIT AND SCALING ID $2B DEFINITION

Unit and Scaling ID (hex)	Description	Scaling/bit	Min. value		Max. value		External test equipment SI (Metric) display
			(hex)	(dec.)	(hex)	(dec.)	
2B	Switches	hex to decimal	0000	0	FFFF	65535	xxxxx switches
		unsigned	Data Range examples:				Display examples:
			$0000		0 switches		0 switches
			$0001		+1 switches		1 switches
			$FFFF		+65535 switches		65535 switches

Downloaded from SAE International by Tara Casaletto, Monday, January 09, 2023

TABLE E44—UNIT AND SCALING ID $2C DEFINITION

Unit and Scaling ID (hex)	Description	Scaling/bit	Min. value		Max. value		External test equipment SI (Metric) display
			(hex)	(dec.)	(hex)	(dec.)	
2C	mass per cylinder	0.01 g/cyl per bit unsigned	0000	0 g/cyl	FFFF	655.35 g/cyl	xxx.xx g/cyl
			Data Range examples:				Display examples:
			$0000		0 g/cyl		0.00 g/cyl
			$0001		+0.01 g/cyl		0.01 g/cyl
			$FFFF		+655.35 g/cyl		655.35 g/cyl

TABLE E45—UNIT AND SCALING ID $2D DEFINITION

Unit and Scaling ID (hex)	Description	Scaling/bit	Min. value		Max. value		External test equipment SI (Metric) display
			(hex)	(dec.)	(hex)	(dec.)	
2D	Weight per stroke	0.01 mg/stroke unsigned	0000	0 mg/stroke	FFFF	655.35 mg/stroke	xxx.xx mg/stroke
			Data Range examples:				Display examples:
			$0000		0 mg/stroke		0.00 mg/stroke
			$0001		+0.01 mg/stroke		0.01 mg/stroke
			$FFFF		+655.35 mg/stroke		655.35 mg/stroke

TABLE E46—UNIT AND SCALING ID $2E DEFINITION

Unit and Scaling ID (hex)	Description	Scaling/bit	Min. value		Max. value		External test equipment SI (Metric) display
			(hex)	(dec.)	(hex)	(dec.)	
2E	True/False	state encoded unsigned	0000	false	0001	true	
			Data Range examples:				Display examples:
			$0000		false		false
			$0001		true		true

Downloaded from SAE International by Tara Casaletto, Monday, January 09, 2023

TABLE E47—UNIT AND SCALING ID $2F DEFINITION

Unit and Scaling ID (hex)	Description	Scaling/bit	Min. value		Max. value		External test equipment SI (Metric) display
			(hex)	(dec.)	(hex)	(dec.)	
2F	Percent	0.01 % per bit	0000	0 %	FFFF	655.35 %	xxx.xx %
		unsigned	Data Range examples:				Display examples:
			$0000		0 %		0.00 %
			$0001		+0.01 %		0.01 %
			$2710		+100 %		100.00 %
			$FFFF		+655.35 %		655.35 %

TABLE E48—UNIT AND SCALING ID $30 DEFINITION

Unit and Scaling ID (hex)	Description	Scaling/bit	Min. value		Max. value		External test equipment SI (Metric) display
			(hex)	(dec.)	(hex)	(dec.)	
30	Percent	0.001526 % per bit	0000	0 %	FFFF	100.00 %	xxx.xx %
		unsigned	Data Range examples:				Display examples:
			$0000		0 %		0.00 %
			$0001		+0.001526 %		0.00 %
			$FFFF		+100.00641 %		100.00 %

TABLE E49—UNIT AND SCALING ID $31 DEFINITION

Unit and Scaling ID (hex)	Description	Scaling/bit	Min. value		Max. value		External test equipment SI (Metric) display
			(hex)	(dec.)	(hex)	(dec.)	
31	volume	0.001 L per bit	0000	0 L	FFFF	65.535 L	xx.xxx L
		unsigned	Data Range examples:				Display examples:
			$0000		0 L		0.000 L
			$0001		+0.001 L		0.001 L
			$FFFF		+65.535 L		65.535 L

Downloaded from SAE International by Tara Casaletto, Monday, January 09, 2023

TABLE E50—UNIT AND SCALING ID $32 DEFINITION

Unit and Scaling ID (hex)	Description	Scaling/bit	Min. value		Max. value		External test equipment SI (Metric) display
			(hex)	(dec.)	(hex)	(dec.)	
32	length	0.0000305 inch	0000	0 inch	FFFF	1.999 inch	xx.xxx inch
		per bit , unsigned	Data Range examples:				Display examples:
	1 inch = 25.4 mm		$0000		0 inch		0.000 mm (0.000 inch)
			:		:		:
			$0010		+0.0004880 inch		0.012 mm (0.000 inch)
			$0011		+0.0005185 inch		0.013 mm (0.001 inch)
			$FFFF		+1.9988175 inch		50.770 mm (1.999 inch)

TABLE E51—UNIT AND SCALING ID $33 DEFINITION

Unit and Scaling ID (hex)	Description	Scaling/bit	Min. value		Max. value		External test equipment SI (Metric) display
			(hex)	(dec.)	(hex)	(dec.)	
33	Equivalence	0.00024414	0000	0	FFFF	15.99976	xx.xx lambda
	ratio (lambda)	per bit, unsigned	Data Range examples:				Display examples:
	measured Air/Fuel ratio		$0000		0		0.00 lambda
	divided by the stoichiometric		$0001		0.00		0.00 lambda
	Air/Fuel ratio (14.64 for gasoline)		$1000		1.00		1.00 lambda
			$E5BE		14.36		14.36 lambda
			$FFFF		16.00		16.00 lambda

NOTE— Unit And Scaling Identifiers in the unsigned range of $01 through $7F which are not specified are reserved by this document. Additional Scaling Identifiers shall be submitted to the SAE Vehicle E/E System Diagnostic Standards Committee or ISO/TC22/SC3/WG1 to consider for implementation in this document.

Downloaded from SAE International by Tara Casaletto, Monday, January 09, 2023

E.2 Signed Unit and Scaling Identifiers Definition

TABLE E52—UNIT AND SCALING ID $81 DEFINITION

Unit and Scaling ID (hex)	Description	Scaling/bit	Min. value		Max. value		External test equipment SI (Metric) display
			(hex)	(dec.)	(hex)	(dec.)	
81	Raw Value	1 per bit	8000	–32768	7FFF	+32767	xxxxx
		hex to decimal	Data Range examples:				Display examples:
		signed	$8000		–32768		–32768
			$FFFF		–1		–1
			$0000		0		0
			$0001		+1		1
			$7FFF		+32767		32767

TABLE E53—UNIT AND SCALING ID $82 DEFINITION

Unit and Scaling ID (hex)	Description	Scaling/bit	Min. value		Max. value		External test equipment SI (Metric) display
			(hex)	(dec.)	(hex)	(dec.)	
82	Raw Value	0.1 per bit	8000	–3276.8	7FFF	+3276.7	xxxx.x
		hex to decimal	Data Range examples:				Display examples:
		signed	$8000		-3276.8		–3276.8
			$FFFF		–0.1		–0.1
			$0000		0		0.0
			$0001		+0.1		0.1
			$7FFF		+3276.7		3276.7

TABLE E54—UNIT AND SCALING ID $83 DEFINITION

Unit and Scaling ID (hex)	Description	Scaling/bit	Min. value		Max. value		External test equipment SI (Metric) display
			(hex)	(dec.)	(hex)	(dec.)	
83	Raw Value	0.01 per bit	8000	–327.68	7FFF	+327.67	xxx.xx
		hex to decimal	Data Range examples:				Display examples:
		signed	$8000		–327.68		–327.68
			$FFFF		–0.01		–0.01
			$0000		0		0.00
			$0001		+0.01		0.01
			$7FFF		+327.67		32.767

Downloaded from SAE International by Tara Casaletto, Monday, January 09, 2023

TABLE E55—UNIT AND SCALING ID $84 DEFINITION

Unit and Scaling ID (hex)	Description	Scaling/bit	Min. value		Max. value		External test equipment SI (Metric) display
			(hex)	(dec.)	(hex)	(dec.)	
84	Raw Value	0.001 per bit	8000	–32.768	7FFF	+32.767	xx.xxx
		hex to decimal	Data Range examples:				Display examples:
		signed	$8000		–32.768		–32.768
			$FFFF		–0.001		–0.001
			$0000		0		0.000
			$0001		+0.001		0.001
			$7FFF		+32.767		32.767

TABLE E56—UNIT AND SCALING ID $85 DEFINITION

Unit and Scaling ID (hex)	Description	Scaling/bit	Min. value		Max. value		External test equipment SI (Metric) display
			(hex)	(dec.)	(hex)	(dec.)	
85	Raw Value	0.0000305 per bit	8000	–0.999	7FFF	0.999	x.xxx
		hex to decimal	Data Range examples:				Display examples:
		signed	$8000		–0.999424		–0.999
			$FFFF		–0.0000305		0.000
			$0000		0		0.000
			$0001		+0.0000305		0.000
			$7FFF		+0.999394		0.999

TABLE E57—UNIT AND SCALING ID $86 DEFINITION

Unit and Scaling ID (hex)	Description	Scaling/bit	Min. value		Max. value		External test equipment SI (Metric) display
			(hex)	(dec.)	(hex)	(dec.)	
86	Raw Value	0.000305 per bit	8000	–9.994	7FFF	9.994	x.xxx
		hex to decimal	Data Range examples:				Display examples:
		signed	$8000		–9.99424		–9.994
			$FFFF		–0.000305		0.000
			$0000		0		0.000
			$0001		+0.000305		0.000
			$7FFF		+9.99394		9.994

Downloaded from SAE International by Tara Casaletto, Monday, January 09, 2023

TABLE E58—UNIT AND SCALING ID $8A DEFINITION

Unit and Scaling ID (hex)	Description	Scaling/bit	Min. value		Max. value		External test equipment SI (Metric) display
			(hex)	(dec.)	(hex)	(dec.)	
8A	Voltage	0.122 mV per bit	8000	–3.9977 V	7FFF	3.9976 V	x.xxxx V
		signed	Data Range examples:				Display examples:
	Conversion mV -> V:		$8000		–3997.696 mV		–3.9977 V
	1000 mV = 1 V		$FFFF		–0.122 mV		–0.0001 V
			$0000		0 mV		0.0000 V
			$0001		0.122 mV		0.0001 V
			$7FFF		+3997.574 mV		3.9976 V

TABLE E59—UNIT AND SCALING ID $8B DEFINITION

Unit and Scaling ID (hex)	Description	Scaling/bit	Min. value		Max. value		External test equipment SI (Metric) display
			(hex)	(dec.)	(hex)	(dec.)	
8B	Voltage	0.001 mV per bit	8000	–32.768 V	7FFF	32.767 V	xx.xxx V
		signed	Data Range examples:				Display examples:
	Conversion mV -> V:		$8000		–32768 mV		–32.768 V
	1000 mV = 1 V		$FFFF		–1 mV		–0.001 V
			$0000		0 mV		0.000 V
			$0001		1 mV		0.001 V
			$7FFF		+32767 mV		32.767 V

TABLE E60—UNIT AND SCALING ID $8C DEFINITION

Unit and Scaling ID (hex)	Description	Scaling/bit	Min. value		Max. value		External test equipment SI (Metric) display
			(hex)	(dec.)	(hex)	(dec.)	
8C	Voltage	0.01 mV per bit	8000	–327.68 V	7FFF	327.67 V	xxx.xx V
		signed	Data Range examples:				Display examples:
	Conversion mV -> V:		$8000		–327680 mV		–327.68 V
	1000 mV = 1 V		$FFFF		–10 mV		–0.01 V
			$0000		0 mV		0.00 V
			$0001		+10 mV		0.01 V
			$7FFF		+327670 mV		327.67 V

Downloaded from SAE International by Tara Casaletto, Monday, January 09, 2023

TABLE E61—UNIT AND SCALING ID $8D DEFINITION

Unit and Scaling ID (hex)	Description	Scaling/bit	Min. value		Max. value		External test equipment SI (Metric) display
			(hex)	(dec.)	(hex)	(dec.)	
8D	Current	0.00390625 mA	8000	–128.0 mA	7FFF	127.996 mA	xxx.xxx mA
		per bit, signed	Data Range examples:				Display examples:
			$8000		–128 mA		–128.000 mA
			$FFFF		–0.00390625 mA		–0.004 mA
			$0000		+0 mA		0.000 mA
			$0001		0.00390625 mA		0.004 mA
			$7FFF		+127.996 mA		127.996 mA

TABLE E62—UNIT AND SCALING ID $8E DEFINITION

Unit and Scaling ID (hex)	Description	Scaling/bit	Min. value		Max. value		External test equipment SI (Metric) display
			(hex)	(dec.)	(hex)	(dec.)	
8E	Current	0.001 A per bit	8000	–32.768 A	7FFF	32.767 A	xx.xxx A
		signed	Data Range examples:				Display examples:
	Conversion mA -> A:		$8000		–32768 mA		–32.768 A
	1000 mA = 1 A		$FFFF		–1 mA		–0.001 A
			$0000		0 mA		0.000 A
			$0001		+1 mA		0.001 A
			$7FFF		+32767 mA		32.767 A

TABLE E63—UNIT AND SCALING ID $90 DEFINITION

Unit and Scaling ID (hex)	Description	Scaling/bit	Min. value		Max. value		External test equipment SI (Metric) display
			(hex)	(dec.)	(hex)	(dec.)	
90	Time	1 ms per bit	8000	–32.768 s	7FFF	+32.767 s	xx.xxx s
		signed	Data Range examples:				Display examples:
			$8000		–32768 ms		–32.768 s
			$0001		+1 ms		+0.001 s
			$7FFF		+32767 ms		32.767 s

Downloaded from SAE International by Tara Casaletto, Monday, January 09, 2023

TABLE E64—UNIT AND SCALING ID $96 DEFINITION

Unit and Scaling ID (hex)	Description	Scaling/bit	Min. value		Max. value		External test equipment SI (Metric) display	
			(hex)	(dec.)	(hex)	(dec.)		
96	Temperature	0.1 °C per bit	8000	–3276.8 °C	7FFF	+3276.7 °C	xxxx.x °C (xxxx.x °F)	
		signed	Data Range examples:				Display examples:	
	Conversion °C-> °F:		$8000		–3276.8 °C		–3276.8 °C	(–5886.2 °F)
	°F = °C * 1.8 + 32 °C		$FE70		–40 °C		–40.0 °C	(–40.0 °F)
			$FFFF		–0.1 °C		–0.1 °C	(31.8 °F)
			$0000		0 °C		0.0 °C	(32.0 °F)
			$0001		+0.1 °C		0.1 °C	(32.2 °F)
			$4E20		+2000 °C		2000.0 °C	(3632.0 °F)
			$7FFF		+3276.7 °C		3276.7 °C	(5930.1 °F)

TABLE E65—UNIT AND SCALING ID $9C DEFINITION

Unit and Scaling ID (hex)	Description	Scaling/bit	Min. value		Max. value		External test equipment SI (Metric) display
			(hex)	(dec.)	(hex)	(dec.)	
9C	Angle	0.01 ° per bit	8000	–327.68 °	7FFF	+327.67 °	xxx.xx °
		signed	Data Range examples:				Display examples:
			$8000		–327.68 °		–327.68 °
			$F060		–40 °		–40.00 °
			$FFFF		–0.01 °		–0.01 °
			$0000		0 °		0.00 °
			$0FA0		+40 °		+40.00 °
			$7FFF		+327.67 °		+327.67 °

Downloaded from SAE International by Tara Casaletto, Monday, January 09, 2023

TABLE E66—UNIT AND SCALING ID $9D DEFINITION

Unit and Scaling ID (hex)	Description	Scaling/bit	Min. value		Max. value		External test equipment SI (Metric) display
			(hex)	(dec.)	(hex)	(dec.)	
9D	Angle	0.5 ° per bit	8000	–16384 °	7FFF	16383 °	xxxxx.x °
		signed	Data Range examples:				Display examples:
			$8000	–16384 °			–16384.0 °
			$FF60	–80 °			–80.0 °
			$FFFF	–0.5 °			–0.5 °
			$0000	0 °			0.0 °
			$0001	+0.5 °			0.5 °
			$00A0	+80 °			+80.0 °
			$7FFF	+16383.5 °			16383.5 °

TABLE E67—UNIT AND SCALING ID $A8 DEFINITION

Unit and Scaling ID (hex)	Description	Scaling/bit	Min. value		Max. value		External test equipment SI (Metric) display	
			(hex)	(dec.)	(hex)	(dec.)		
A8	Weight per	1 g/s per bit	8000	–32768 g/s	7FFF	+32767 g/s	xxxxx g/s (xx.xx lb/s)	
	time	signed	Data Range examples:				Display examples:	
	Conversion g/s -> lb/s:		$8000	–32768 g/s			–32768 g/s	(–72.24 lb/s)
	1 g/s = 0.0022046 lb/s		$FFFF	–1 g/s			–1 g/s	(–0.00 lb/s)
			$0000	0 g/s			0 g/s	(0.00 lb/s)
			$0001	+1 g/s			1 g/s	(–0.00 lb/s)
			$7FFF	+32767 g/s			32767 g/s	(–72.24 lb/s)

TABLE E68—UNIT AND SCALING ID $A9 DEFINITION

Unit and Scaling ID (hex)	Description	Scaling/bit	Min. value		Max. value		External test equipment SI (Metric) display	
			(hex)	(dec.)	(hex)	(dec.)		
A9	Pressure per time	0.25 Pa/s per bit signed	8000	–8192 Pa/s	7FFF	8191.75 Pa/s	xxxx.xx Pa/s (xx.xxx inH2O/s)	
	Conversion PA -> inH2O:		Data Range examples:				Display examples:	
	1 Pa = 0.0040146309 inH2O		$8000	–8192 Pa/s			–8192.00 Pa/s	(–32.888 inH2O/s)
			$FFFC	–1 Pa/s			–1.00 Pa/s	(–0.004 inH2O/s)
			$0000	0 Pa/s			0.00 Pa/s	(0.000 inH2O/s)
			$0004	+1 Pa/s			1.00 Pa/s	(0.004 inH2O/s)
			$7FFF	+8191.75 Pa/s			8191.75 Pa/s	(32.887 inH2O/s)

Downloaded from SAE International by Tara Casaletto, Monday, January 09, 2023

TABLE E69—UNIT AND SCALING ID $AF DEFINITION

Unit and Scaling ID (hex)	Description	Scaling/bit	Min. value		Max. value		External test equipment SI (Metric) display
			(hex)	(dec.)	(hex)	(dec.)	
AF	Percent	0.01 % per bit	8000	–327.68 %	7FFF	+327.67 %	xxx.xx %
		signed	Data Range examples:				Display examples:
			$8000		–327.68 %		–327.68 %
			$D8F0		–100 %		–100.00 %
			$FFFF		–0.01 %		–0.10 %
			$0000		0 %		0.00 %
			$0001		+0.01 %		0.10 %
			$2710		+100 %		100.00 %
			$7FFF		+327.67 %		327.67 %

TABLE E70—UNIT AND SCALING ID $B0 DEFINITION

Unit and Scaling ID (hex)	Description	Scaling/bit	Min. value		Max. value		External test equipment SI (Metric) display
			(hex)	(dec.)	(hex)	(dec.)	
B0	Percent	0.003052 % per bit	8000	–100.01 %	7FFF	+100.00 %	xxx.xx %
		signed	Data Range examples:				Display examples:
			$8000		–100.007936 %		–100.01 %
			$FFFF		–0.003052 %		0.00 %
			$0000		0 %		0.00 %
			$0001		+0.003052 %		0.00 %
			$7FFF		+100.004884 %		+100.00 %

TABLE E71—UNIT AND SCALING ID $FD DEFINITION

Unit and Scaling ID (hex)	Description	Scaling/bit	Min. value		Max. value		External test equipment SI (Metric) display
			(hex)	(dec.)	(hex)	(dec.)	
FD	Pressure	0.001 kPa per	8000	–32.768 kPa	7FFF	+32.767 kPa	xx.xxx kPa
	(absolute)	bit, signed	Data Range examples:				Display examples:
			$8000		–32.768 kPa		–32.768 kPa
			$0001		+0.001 kPa		+0.001 kPa
			$7FFF		+32.767 kPa		+32.767 kPa

Downloaded from SAE International by Tara Casaletto, Monday, January 09, 2023

TABLE E72—UNIT AND SCALING ID $FE DEFINITION

Unit and Scaling ID (hex)	Description	Scaling/bit	Min. value		Max. value		External test equipment SI (Metric) display	
			(hex)	(dec.)	(hex)	(dec.)		
FE	Pressure	0.25 Pa per bit	8000	–8192 Pa	7FFF	8191.75 Pa	xxxx.xx Pa (xx.xxx inH2O)	
	(vacuum)	signed	Data Range examples:				Display examples:	
	Conversion PA -> inH2O:		$8000		–8192 Pa		–8192.00 Pa	(–32.888 inH2O)
	1 Pa = 0.0040146309 inH2O		$FFFC		–1 Pa		–1.00 Pa	(–0.004 inH2O)
			$0000		0 Pa		0.00 Pa/	(0.000 inH2O)
			$0004		+1 Pa		1.00 Pa	(0.004 inH2O)
			$7FFF		+8191.75 Pa		8191.75 Pa	(32.887 inH2O)

NOTE— Unit And Scaling Identifiers in the signed range of $80 through $FE which are not specified are reserved by this document. Additional Scaling identifiers shall be submitted to the SAE Vehicle E/E System Diagnostic Standards Committee or ISO/TC22/SC3/WG1 to consider for implementation in this document.

Downloaded from SAE International by Tara Casaletto, Monday, January 09, 2023

APPENDIX F

(NORMATIVE)
IDS (TEST ID) FOR SERVICE $08 SCALING AND DEFINITION

TABLE F1—TEST ID DESCRIPTION

Test ID #	Description
$01	**Evaporative system leak test** DATA_A - DATA_E should be set to $00 for a request and response message. For ISO 15765-4 protocol DATA_A - DATA_E shall not be included in the request and response message. If the conditions are not proper to run the test, the vehicle may either not respond to the request, or may respond with a manufacturer specified value as DATA_A which corresponds to the reason the test cannot be run. This service enables the conditions required to conduct an evaporative system leak test, but does not actually run the test. An example is to close a purge solenoid, preventing leakage if the system is pressurised. The vehicle manufacturer is responsible to determine the criteria to automatically stop the test (open the solenoid in the example) such as engine running, vehicle speed greater than zero, or exceeding a specified time period.
$02 - $FF	Reserved by this document

Downloaded from SAE International by Tara Casaletto, Monday, January 09, 2023

APPENDIX G

(NORMATIVE)
INFOTYPES FOR SERVICE $09 SCALING AND DEFINITION

TABLE G1—MESSAGECOUNT VIN DATA BYTE DESCRIPTION

InfoType (Hex)	Vehicle information data byte description	Scaling	Mnemonic
01	**MessageCount VIN** Number of messages to report Vehicle Identification Number (VIN) - For ISO 9141-2, ISO 14230-4, and SAE J1850, the message count in the response shall always be $05, and shall be reported for consistency in the use of this service. Support for ISO 15765-4 is optional, but if used, the message count in the response shall always be $01.	1 byte unsigned numeric	MC_VIN

TABLE G2— VEHICLE IDENTIFICATION NUMBER DATA BYTE DESCRIPTION

InfoType (Hex)	Description	Scaling	External test equipment SI (Metric) / English display
02	**Vehicle Identification Number**	17 ASCII characters	VIN: XXXXXXXXXXXXXXXXX
	For vehicles that provide electronic access to the VIN, it is recommended to report it using this format for ease of use by the external test equipment intended either for vehicle diagnostics or Inspection/Maintenance programmes. For ISO 9141-2, ISO 14230-4, SAE J1850 the response consists of the following messages: Message #1 shall contain three (3) filling bytes of $00, followed by VIN character #1, Message #2 shall contain VIN characters #2 to #5 inclusive, Message #3 shall contain VIN characters #6 to #9 inclusive, Message #4 shall contain VIN characters #10 to #13 inclusive, Message #5 shall contain VIN characters #14 to #17 inclusive. For ISO 15765-4 there is only one response message which contains all VIN characters without any filling bytes.		

TABLE G3—MESSAGECOUNT CALID DATA BYTE DESCRIPTION

InfoType (Hex)	Vehicle information data byte description	Scaling	Mnemonic
03	**MessageCount CALID** Number of messages to report calibration identifications - For ISO 9141-2, ISO 14230-4, and SAE J1850, the message count in the response shall always be a multiple of four (4) because four (4) messages are used to report each calibration identification. Support for ISO 15765-4 is optional, but if used, the message count in the response shall always be $01.	1 byte unsigned numeric	MC_CALID

Downloaded from SAE International by Tara Casaletto, Monday, January 09, 2023

TABLE G4—CALIBRATION IDENTIFICATIONS DATA BYTE DESCRIPTION

InfoType (Hex)	Description	Scaling	External test equipment SI (Metric) / English display
04	**Calibration Identifications**	16 ASCII characters	CALID: XXXXXXXXXXXXXXXX
	Multiple calibration identifications may be reported for a controller, depending on the software architecture. Calibration identifications can include a maximum of sixteen (16) characters. Each calibration identification can contain only printable ASCII characters, and will be reported as ASCII values. Any unused data bytes shall be reported as $00 and filled at the end of the calibration identification. Calibration identifications shall uniquely identify the software installed in the ECU. If regulations require calibration identifications for emission-related software, those shall be reported in a standardised format. Calibrations developed by any entity other than the vehicle manufacturer shall also contain unique calibration identification to indicate that a calibration is installed in the vehicle that is different from that developed by the vehicle manufacturer. Vehicle controllers that contain calibration identifications shall store and report sixteen (16) ASCII character calibration identifications, even though they may not use all sixteen (16) characters. This will allow modified calibration IDs to be reported that, include additional characters.		

TABLE G5—MESSAGECOUNT CVN DATA BYTE DESCRIPTION

InfoType (Hex)	Vehicle information data byte description	Scaling	Mnemonic
05	**MessageCount CVN** Number of messages to report Calibration Verification Numbers. - For ISO 9141-2, ISO 14230-4, and SAE J1850, the message count in the response shall be the number of CVNs to report, because one message is required to report each CVN. Support for ISO 15765-4 is optional, but if used, the message count in the response shall always be $01.	1 byte unsigned numeric	MC_CVN

Downloaded from SAE International by Tara Casaletto, Monday, January 09, 2023

TABLE G6—CALIBRATION VERIFICATION NUMBERS DATA BYTE DESCRIPTION

InfoType (Hex)	Description	Scaling	External test equipment SI (Metric) / English display
06	**Calibration Verification Numbers**	4 byte hex (most significant byte reported as Data A)	CVN: XXXXXXXX
	A Calibration Verification Number (CVN) is used to verify the integrity of the vehicle software. The vehicle manufacturer is responsible to determine how many CVNs are required and how the CVNs are calculated, e.g., checksum, and the areas of memory to be included in each calculation. If regulations require calibration verification numbers for emission-related software, those shall be reported in a standardised format. Generally, each calibration, as identified by a calibration ID number (InfoType $04), will also have at least one unique calibration verification number (CVN). Two (2) response methods to report the CVN(s) to an external test equipment are allowed. The method to be implemented in the vehicle is specified by the applicable regulations. Method #1:The CVN(s) must not be computed on demand, but instead shall be computed at least once per trip. A trip shall be of reasonable length (e.g., 5 - 10 minutes). The computed CVN(s) shall be stored in NVM (Non Volatile Memory) for immediate access by the external test equipment. Once the computation is completed for the very first time after a reprogramming event of the ECU(s) or a battery disconnect, the results shall be made available to the external test equipment even if the engine is running. If the CVN(s) are requested before they have been computed a negative response message with response code $78 – RequestCorrectlyReceived-ResponsePending shall be sent by the ECU(s) until the positive response message is available for the ISO 14230-4 and ISO 15765-4 protocols. For ISO 9141-2 and SAE J1850 protocols the external test equipment and ECU(s) shall behave as specified in Sections 4.1.4.3.1 and 4.1.4.3.3. Method #2:If method #1 does not apply the ECU(s)' on-board software shall compute the CVN(s) on an external test equipment request message. If the ECU(s) are not able to send an immediate positive response message a negative response message with response code $78 – RequestCorrectlyReceived-ResponsePending shall be sent by the ECU(s) until the positive response message is available for the ISO 14230-4 and ISO 15765-4 protocols. For ISO 9141-2 and SAE J1850 protocols the external test equipment and ECU(s) shall behave as specified in Sections 4.1.4.3.1 and 4.1.4.3.3. Calibrations developed by any entity other than the vehicle manufacturer will generally have a calibration verification number that is different from that calculated based on the calibration developed by the vehicle manufacturer. If the calculation technique does not use all four (4) bytes, the CVN shall be right justified and filled with $00.		

TABLE G7—MESSAGECOUNT IPT DATA BYTE DESCRIPTION

InfoType (Hex)	Vehicle information data byte description	Scaling	Mnemonic
07	**MessageCount IPT** Number of messages to report In-use Performance Tracking. - For ISO 9141-2, ISO 14230-4, and SAE J1850, the message count in the response shall be $08, because at this time sixteen (16) values are required to be reported, and one message is required to report two values. Support for ISO 15765-4 is optional, but if used, the message count in the response shall always be $01.	1 byte unsigned numeric	MC_IPT

Downloaded from SAE International by Tara Casaletto, Monday, January 09, 2023

TABLE G8—IN-USE PERFORMANCE TRACKING DATA BYTE DESCRIPTION

InfoType (Hex)	Description	# of data bytes	External test equipment SI (Metric) / English display
08	**In-use Performance Tracking**	32 byte	IPT:
	Scaling: unsigned numeric (most significant byte reported as Data A) This data is used to support possible regulatory requirements for In-use Performance Tracking. Manufacturers are required to implement software algorithms that track in-use performance for each of the following components: catalyst bank 1, catalyst bank 2, primary oxygen sensor bank 1, primary oxygen sensor bank 2, evaporative 0.020" leak detection system, EGR system, and secondary air system. The numerator for each component or system shall track the number of time that all conditions necessary for a specific monitor to detect a malfunction have been encountered. The denominator for each component or system shall track the number of times that the vehicle has been operated in the specified conditions. These conditions are specified for each monitored component or system. The ignition counter shall track the number of times that the engine has been started. All data items of the In-use Performance Tracking record have to be reported in the order as listed in this table. Data values which are not implemented (e.g., bank 2 of the catalyst monitor of a 1 bank system) shall be reported as $0000.		
	OBD Monitoring Conditions Encountered Counts	2 bytes	OBDCOND: xxxxx cnts
	OBD Monitoring Conditions Encountered Counts displays the number of times that the vehicle has been operated in the specified OBD monitoring conditions (general denominator).		
	Ignition Counter	2 bytes	IGNCNTR: xxxxx cnts
	Ignition Counter displays the count of the number of times that the engine has been started.		
	Catalyst Monitor Completion Counts Bank 1	2 bytes	CATCOMP1: xxxxx cnts
	Catalyst Monitor Completion Counts Bank 1 displays the number of times that all conditions necessary to detect a catalyst system bank 1 malfunction have been encountered (numerator).		
	Catalyst Monitor Conditions Encountered Counts Bank 1	2 bytes	CATCOND1: xxxxx cnts
	Catalyst Monitor Conditions Encountered Counts Bank 1 displays the number of times that the vehicle has been operated in the specified catalyst monitoring conditions (denominator).		
	Catalyst Monitor Completion Counts Bank 2	2 bytes	CATCOMP2: xxxxx cnts
	Catalyst Monitor Completion Counts Bank 2 displays the number of time that all conditions necessary to detect a catalyst system bank 2 malfunction have been encountered (numerator).		
	Catalyst Monitor Conditions Encountered Counts Bank 2	2 bytes	CATCOND2: xxxxx cnts
	Catalyst Monitor Conditions Encountered Counts Bank 2 displays the number of times that the vehicle has been operated in the specified catalyst monitoring conditions (denominator).		
	O2 Sensor Monitor Completion Counts Bank 1	2 bytes	O2SCOMP1: xxxxx cnts
	O2 Sensor Monitor Completion Counts Bank 1 displays the number of time that all conditions necessary to detect an oxygen sensor bank 1 malfunction have been encountered (numerator).		
	O2 Sensor Monitor Conditions Encountered Counts Bank 1	2 bytes	O2SCOND1: xxxxx cnts
	O2 Sensor Monitor Conditions Encountered Counts Bank 1 displays the number of times that the vehicle has been operated in the specified oxygen sensor monitoring conditions (denominator).		
	O2 Sensor Monitor Completion Counts Bank 2	2 bytes	O2SCOMP2: xxxxx cnts
	O2 Sensor Monitor Completion Counts Bank 2 displays the number of time that all conditions necessary to detect an oxygen sensor bank 2 malfunction have been encountered (numerator).		
	O2 Sensor Monitor Conditions Encountered Counts Bank 2	2 bytes	O2SCOND2: xxxxx cnts
	O2 Sensor Monitor Conditions Encountered Counts Bank 2 displays the number of times that the vehicle has been operated in the specified oxygen sensor monitoring conditions (denominator).		

Downloaded from SAE International by Tara Casaletto, Monday, January 09, 2023

TABLE G8—IN-USE PERFORMANCE TRACKING DATA BYTE DESCRIPTION

InfoType (Hex)	Description	# of data bytes	External test equipment SI (Metric) / English display
	EGR Monitor Completion Condition Counts	2 bytes	EGRCOMP: xxxxx cnts
	EGR Monitor Completion Condition Counts displays the number of time that all conditions necessary to detect an EGR system malfunction have been encountered (numerator).		
	EGR Monitor Conditions Encountered Counts	2 bytes	EGRCOND: xxxxx cnts
	EGR Monitor Conditions Encountered Counts displays the number of times that the vehicle has been operated in the specified EGR system monitoring conditions (denominator).		
	AIR Monitor Completion Condition Counts (Secondary Air)	2 bytes	AIRCOMP: xxxxx cnts
	AIR Monitor Completion Condition Counts (Secondary Air) displays the number of time that all conditions necessary to detect an AIR system malfunction have been encountered (numerator).		
	AIR Monitor Conditions Encountered Counts (Secondary Air)	2 bytes	AIRCOND: xxxxx cnts
	AIR Monitor Conditions Encountered Counts (Secondary Air) displays the number of times that the vehicle has been operated in the specified AIR system monitoring conditions (denominator).		
	EVAP Monitor Completion Condition Counts	2 bytes	EVAPCOMP: xxxxx cnts
	EVAP Monitor Completion Condition Counts displays the number of time that all conditions necessary to detect a 0.020" EVAP system leak malfunction have been encountered (numerator).		
	EVAP Monitor Conditions Encountered Counts	2 bytes	EVAPCOND: xxxxx cnts
	EVAP Monitor Conditions Encountered Counts displays the number of times that the vehicle has been operated in the specified EVAP system leak malfunction monitoring conditions (denominator).		

TABLE G9—RESERVED BY DOCUMENT

InfoType (Hex)	Vehicle information data byte description	Scaling	Mnemonic
09 - FF	Reserved by this document.	---	---

Downloaded from SAE International by Tara Casaletto, Monday, January 09, 2023

SAE J1979 Revised APR2002

Rationale—This document was revised by the joint efforts of SAE and ISO task forces, with cooperation from the California Air Resources Board (ARB), to include new On-Board Diagnostic (OBD) requirements for both European and california ARB OBD regulations. Proposed U.S. OBD regulations for the 2005 model year include new requirements for reporting additional data values in Service #01, OBD test results in Service $06, pending fault codes in Service $07, and software calibration verification number and in-use performance ratios in Service $09. This document also includes an enhanced discussion of timing requirements between request and response messages. A significant addition is the inclusion of ISO 15765-4 (CAN) as an allowable data link. Functionality for this protocol is identical to that for other diagnostic protocols, but message length requirements are different due to the network transport layer as defined in ISO 15765-2. The technical content of this document is identical to ISO 15013-5, which is the equivalent document that is referenced in European regulations.

Relationship of SAE Standard to ISO Standard—This document is technically equivalent to ISO/DIS 15031:April 30, 2002, except for minor reorganization of Sections 1 and 2.

Application—This document is intended to satisfy the data reporting requirements of On-Board Diagnostic (OBD) regulations in the United States and Europe, and any other region that may adopt similar requirements in the future. This document specifies:

a. Message formats for request and response messages,
b. Timing requirements between request messages from external test equipment and response messages from vehicles, and between those messages and subsequent request messages,
c. Behavior of both the vehicle and external test equipment if data is not available,
d. A set of diagnostic services, with corresponding content of request and response messages, to satisfy OBD regulations,

This document includes capabilities required to satisfy OBD requirements for multiple regions, model years, engine types, and vehicle types. Those regulations are not yet final for some regions, and are expected to change in the future. This document makes no attempt to interpret the regulations and does not include applicability of the included diagnostic services and data parameters for various vehicle applications. The user of this document is responsible to verify the applicability of each section of this document for a specific vehicle, engine, model year and region.

Reference Section

SAE J1850: MAY2001—Class B Data Communications Network Interface.

SAE J1930—Electrical/Electronic Systems Diagnostic Terms, Definitions, Abbreviations, and Acronyms - Equivalent to ISO/TR 15031-2: April 30, 2002

SAE J1978—OBD II Scan Tool - Equivalent to ISO/DIS 15031-4:December 14, 2001

SAE J2012—Diagnostic Trouble Code Definitions - Equivalent to ISO/DIS 15031-6:April 30, 2002

ISO 9141-2: 1994—Road vehicles - Diagnostic systems - Part 2: CARB requirements for interchange of digital information

ISO 9141-2: 1994/ Amd.1:1996—Road vehicles - Diagnostic systems - Part 2: CARB requirements for interchange of digital information Amendment 1

ISO 14230-4:2000—Road vehicles - Keyword protocol 2000 for diagnostic systems - Part 4: Requirements for emissions-related systems

Downloaded from SAE International by Tara Casaletto, Monday, January 09, 2023

ISO/DIS 15031-5: April 30, 2002—Road vehicles - Communication between vehicle and external test equipment for emissions-related diagnostics - Part 5: Emissions related diagnostic services

ISO 15765-2—Road vehicles – Diagnostics on Controller Area Network (CAN) – Part 2: Network layer services

ISO 15765-4—Road vehicles – Diagnostics on Controller Area Network (CAN) – Part 4: Requirements for emissions-related systems

SAE J1962—Diagnostic Connector - Equivalent to ISO/DIS 15031-3:December 14, 2001

ISO 15031-1:2001—Road vehicles - Communication between vehicle and external test equipment for emissions-related diagnostics - Part 1: General information

Developed by the SAE Vehicle Electrical and Electronics Diagnostic Systems Standards Committee and ISO/TC 22/SC3/WG 1 Serial Data Communication Work Group