US006043114A

United States Patent [19]

Kawagoe et al.

[11] **Patent Number: 6,043,114**

[45] **Date of Patent: Mar. 28, 2000**

[54] **PROCESS FOR MANUFACTURING A SEMICONDUCTOR WAFER, A SEMICONDUCTOR WAFER, PROCESS FOR MANUFACTURING A SEMICONDUCTOR INTEGRATED CIRCUIT DEVICE, AND SEMICONDUCTOR INTEGRATED CIRCUIT DEVICE**

[75] Inventors: **Hiroto Kawagoe**, Hinode-machi; **Tatsumi Shirasu**, Kawasaki; **Shogo Kiyota**, Tateno-machi; **Norio Suzuki**, Higashimurayama; **Eiichi Yamada**, Kumage-gun; **Yuji Sugino**, Nakakoma-gun; **Manabu Kitano**, Yanai; **Yoshihiko Sakurai**; **Takashi Naganuma**, both of Nakakoma-gun; **Hisashi Arakawa**, Kohfu, all of Japan

[73] Assignee: **Hitachi, Ltd.**, Tokyo, Japan

[21] Appl. No.: **08/934,774**

[22] Filed: **Sep. 22, 1997**

Related U.S. Application Data

[62] Division of application No. 08/508,483, Jul. 28, 1995, abandoned.

[30] **Foreign Application Priority Data**

Jul. 28, 1994 [JP] Japan 6-176872
Oct. 28, 1994 [JP] Japan 6-265529

[51] **Int. Cl.**[7] **H01L 21/336**; H01L 21/8234

[52] **U.S. Cl.** **438/197**; 438/222; 438/223; 438/224; 438/226; 438/227

[58] **Field of Search** 438/197, 222, 438/223, 224, 226, 227

[56] **References Cited**

U.S. PATENT DOCUMENTS

3,974,003 8/1976 Zirinsky et al. .
4,005,453 1/1977 Le Can et al. .
4,477,310 10/1984 Park et al. .
4,525,920 7/1985 Jacobs et al. .
4,564,416 1/1986 Homma et al. .
4,578,128 3/1986 Mundt et al. .
4,622,082 11/1986 Dyson et al. .
4,684,971 8/1987 Payne et al. .
4,717,686 1/1988 Jacobs et al. .
4,766,090 8/1988 Coquin et al. .
4,803,179 2/1989 Neppl et al. .
4,943,536 7/1990 Havemann .
5,216,269 6/1993 Middelhoek et al. .
5,237,188 8/1993 Iwai et al. .
5,396,093 3/1995 Lu .
5,508,540 4/1996 Ikeda et al. .
5,508,549 4/1996 Watanabe et al. .

OTHER PUBLICATIONS

Wolf, S., "Silicon Processing for the VLSI Era vol. 1," pp. 64–65, 1986.
Ghandhi, S., "VSLI Fabrication Principles Silicon and Gallium Arsenide," pp. 735–738, 1994.
Yamaguchi et al, "Process integration and device performance of a submicrometer BiCMOS with 16–GHz f(t) double Poly–Bipolar devices," IEEE Transactions on Electron Devices, vol. 36, No. 5 pp. 890–896, May 1989.

Primary Examiner—John F. Niebling
Assistant Examiner—Jonathan Hack
Attorney, Agent, or Firm—Antonelli, Terry, Stout & Kraus, LLP

[57] **ABSTRACT**

Over the principal surface of a semiconductor substrate body containing an impurity of a predetermined conduction type, there is formed an epitaxial layer which contains an impurity of the same conduction type as that of the former impurity and the same concentration as the designed one of the former impurity. After this, there are formed a well region which has the same conduction type as that of said impurity and its impurity concentration gradually lowered depthwise of said epitaxial layer. The well region is formed with the gate insulating films of MIS.FETs.

42 Claims, 19 Drawing Sheets

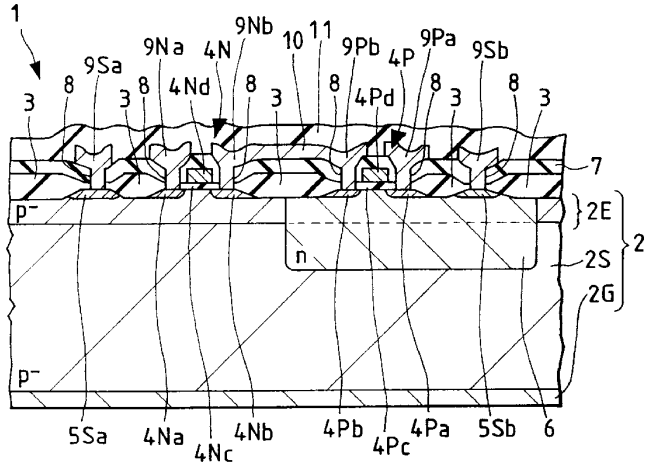

FIG. 1

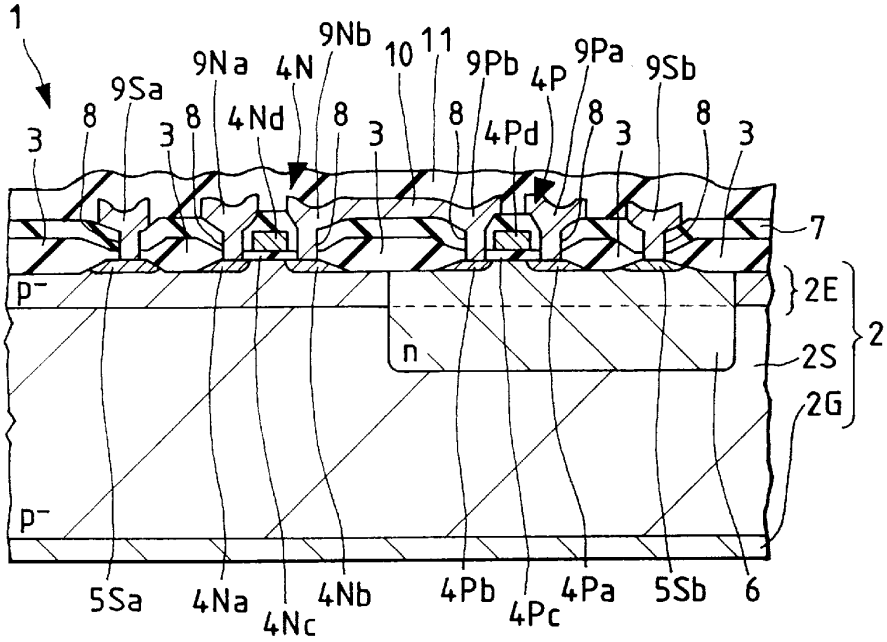
1
9Sa
9Na
4N
9Nb
10
11
9Pb
4P
9Pa
9Sb
3
8
4Nd
4Pd
7
p⁻
2E
n
2S
2
2G
5Sa
4Na
4Nc
4Nb
4Pb
4Pc
4Pa
5Sb
6

FIG. 2

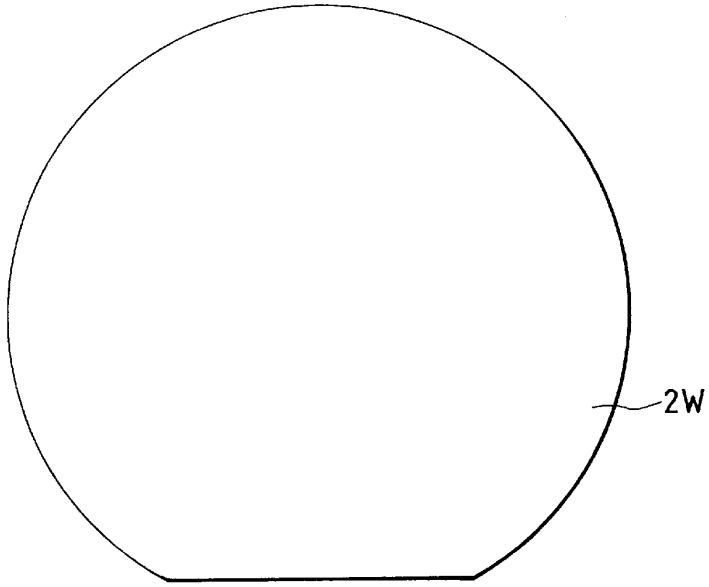
2W

FIG. 3

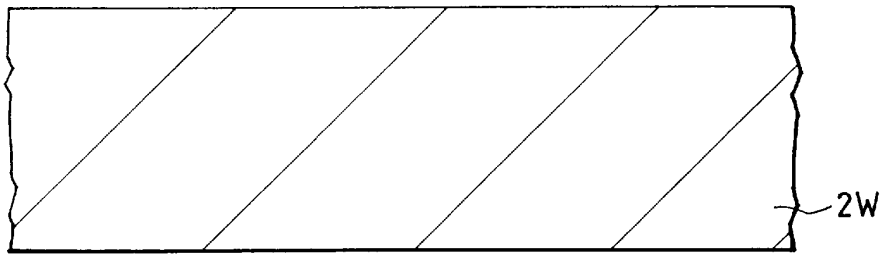

FIG. 4

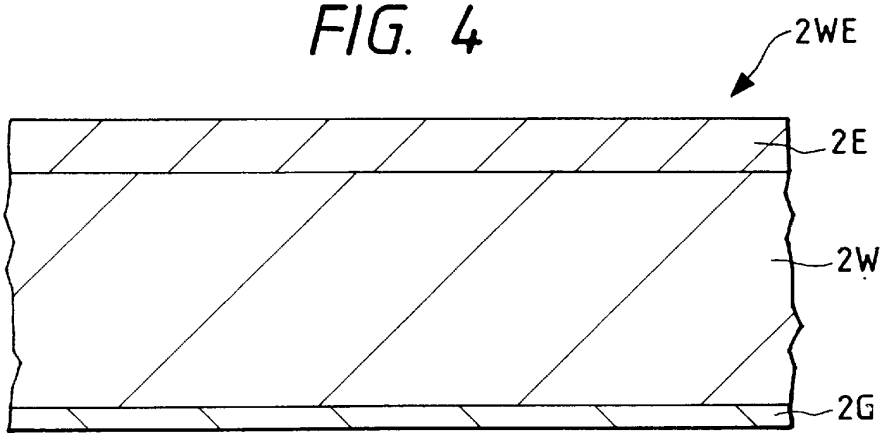

FIG. 5

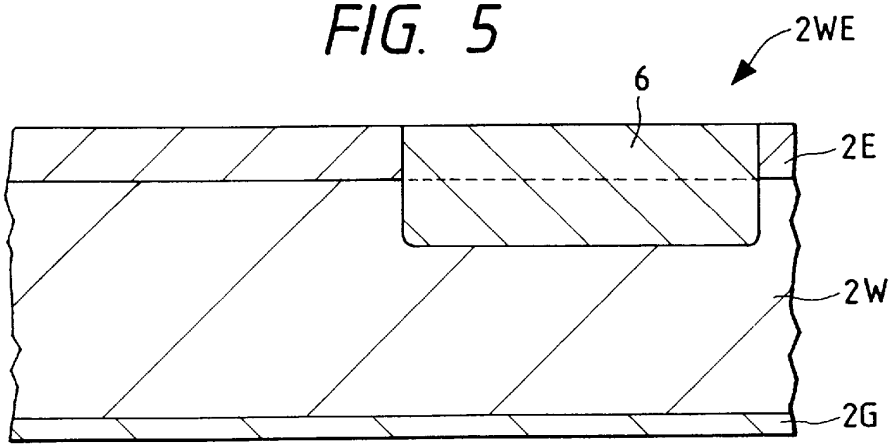

FIG. 6

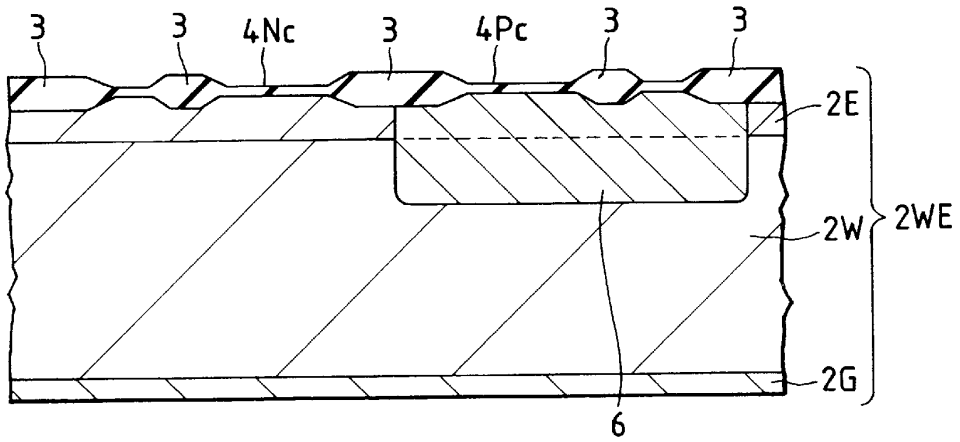
3
3
4Nc
3
4Pc
3
3
2E
2W
2WE
2G
6

FIG. 7

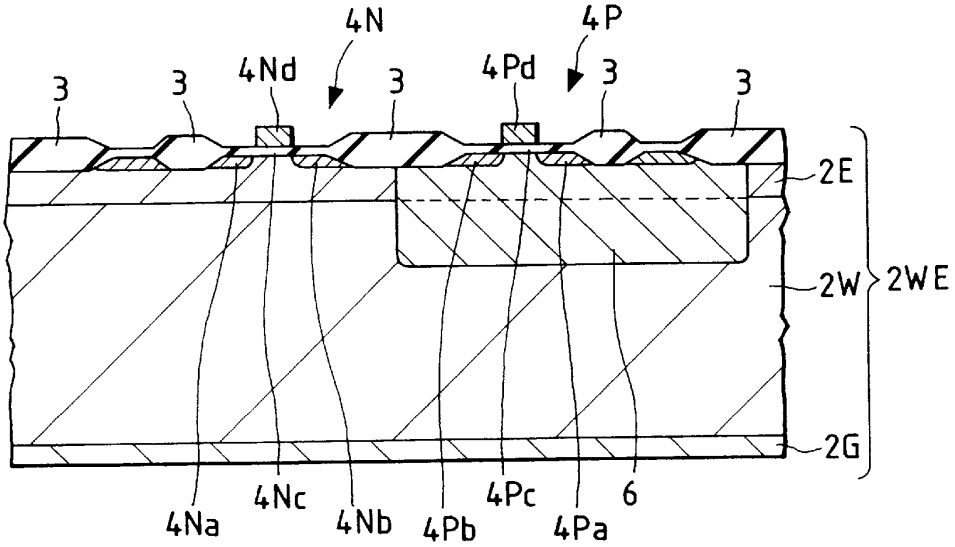
4N
4P
3
3
4Nd
3
4Pd
3
3
2E
2W
2WE
2G
4Na
4Nc
4Nb
4Pb
4Pc
4Pa
6

FIG. 8

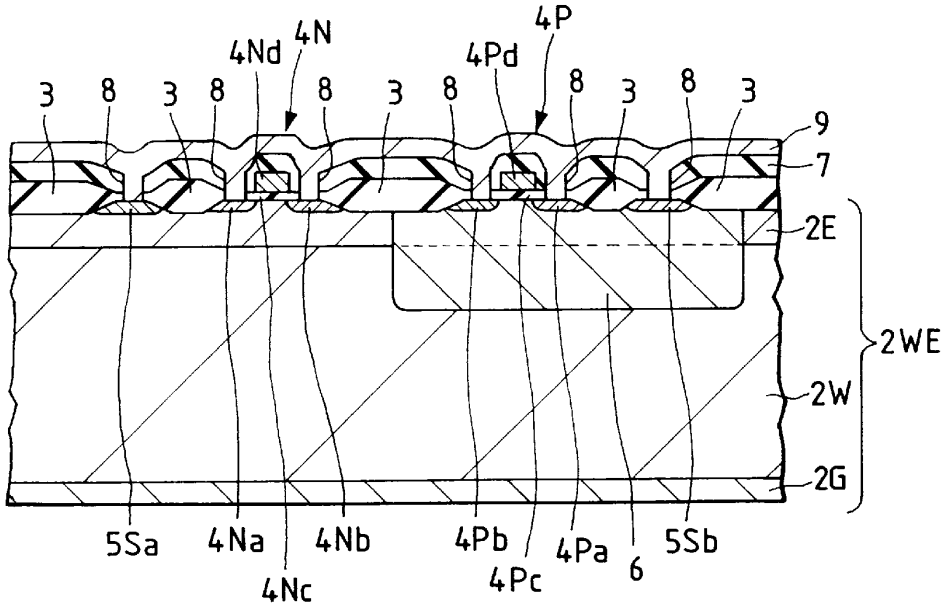
4Nd
4N
4Pd
4P
3
8
9
7
2E
2WE
2W
2G
5Sa
4Na
4Nb
4Nc
4Pb
4Pc
4Pa
6
5Sb

FIG. 9

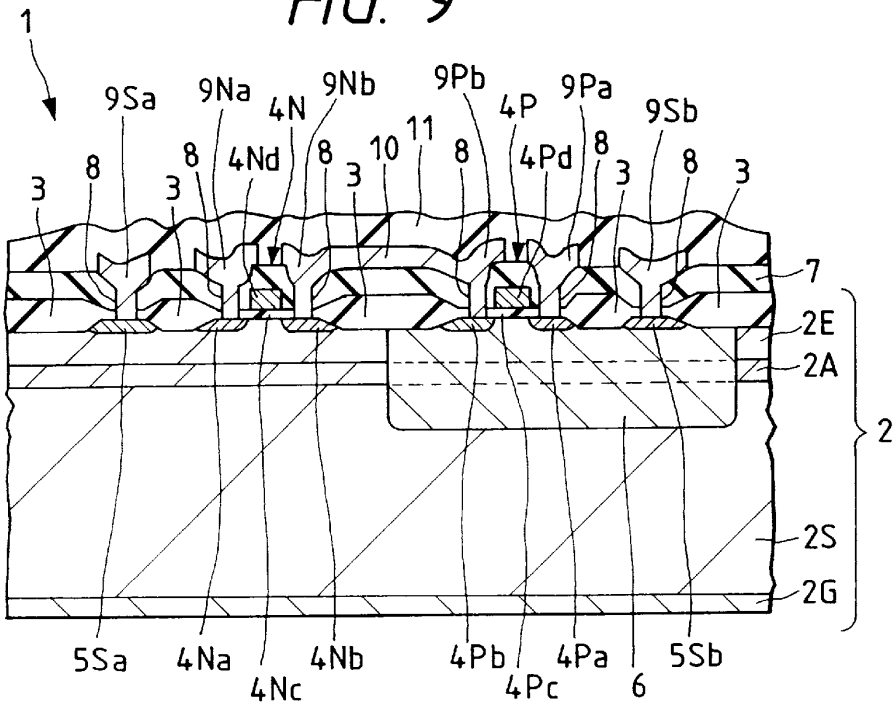
1
9Sa
9Na
4N
9Nb
9Pb
4P
9Pa
9Sb
11
10
4Nd
4Pd
3
8
7
2E
2A
2
2S
2G
5Sa
4Na
4Nb
4Nc
4Pb
4Pc
4Pa
6
5Sb

FIG. 10

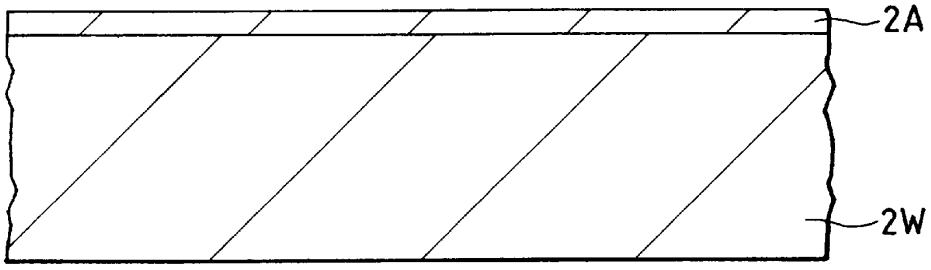

FIG. 11

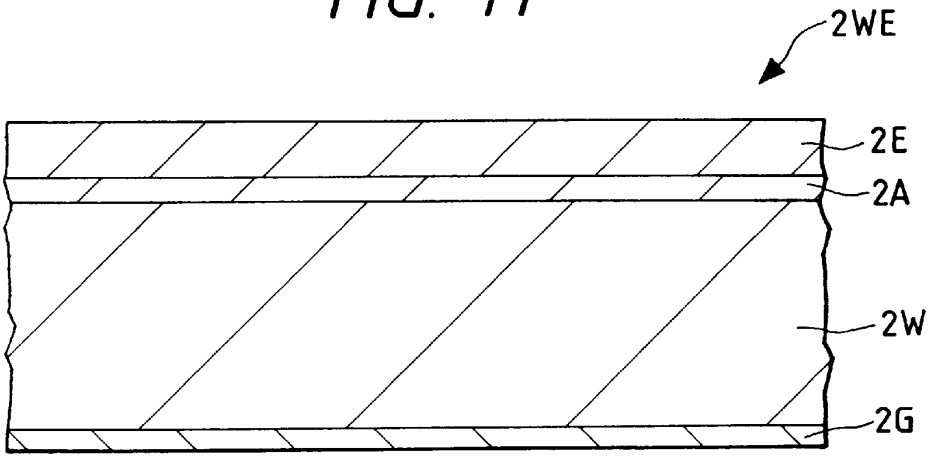

FIG. 12

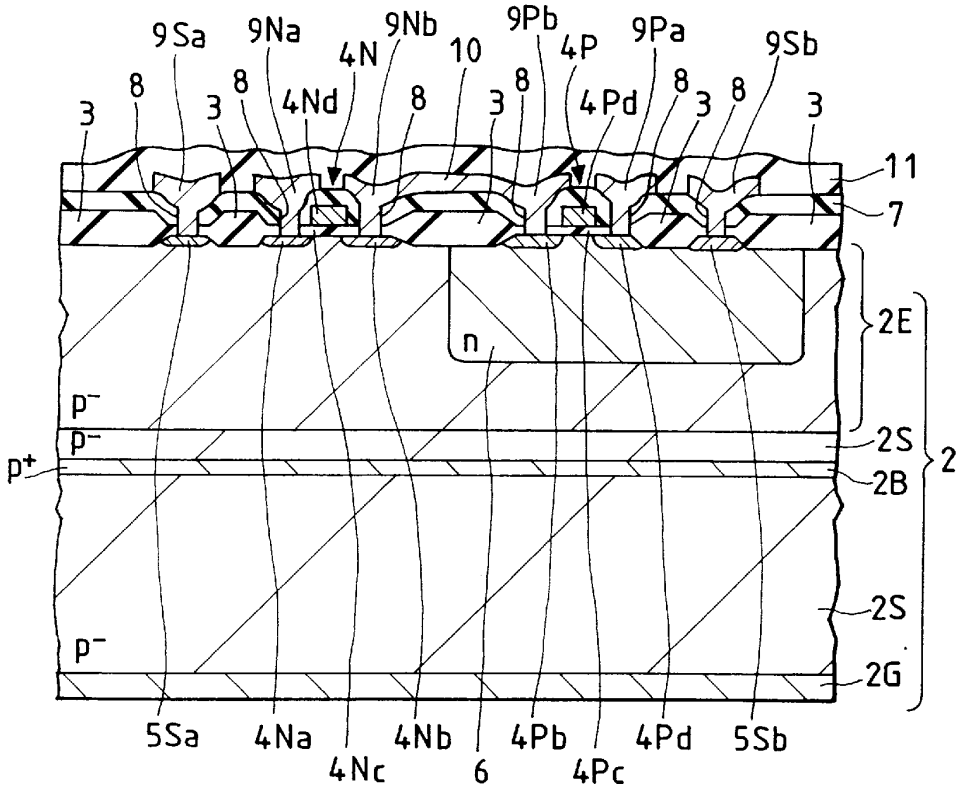
9Sa
9Na
9Nb
9Pb
9Pa
9Sb
4N
10
4P
8
3
4Nd
4Pd
11
7
2E
n
p⁻
2S
2
p⁺
2B
2G
5Sa
4Na
4Nc
4Nb
6
4Pb
4Pc
4Pd
5Sb

FIG. 13

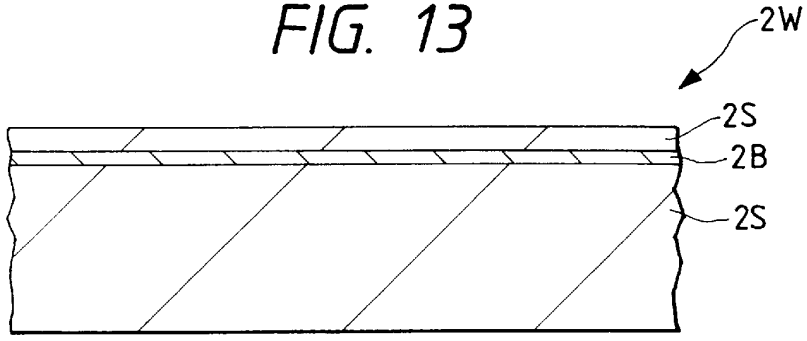
2W
2S
2B
2S

FIG. 14

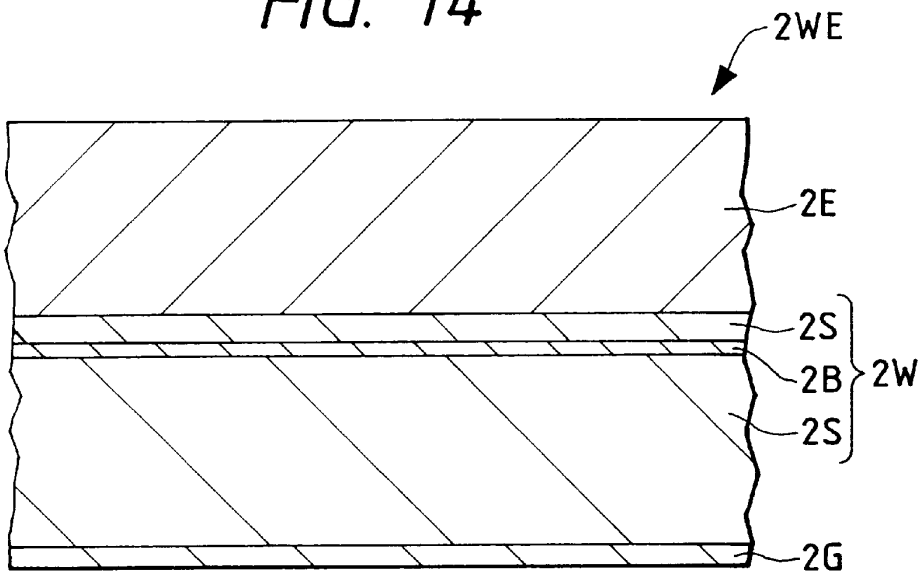

FIG. 15

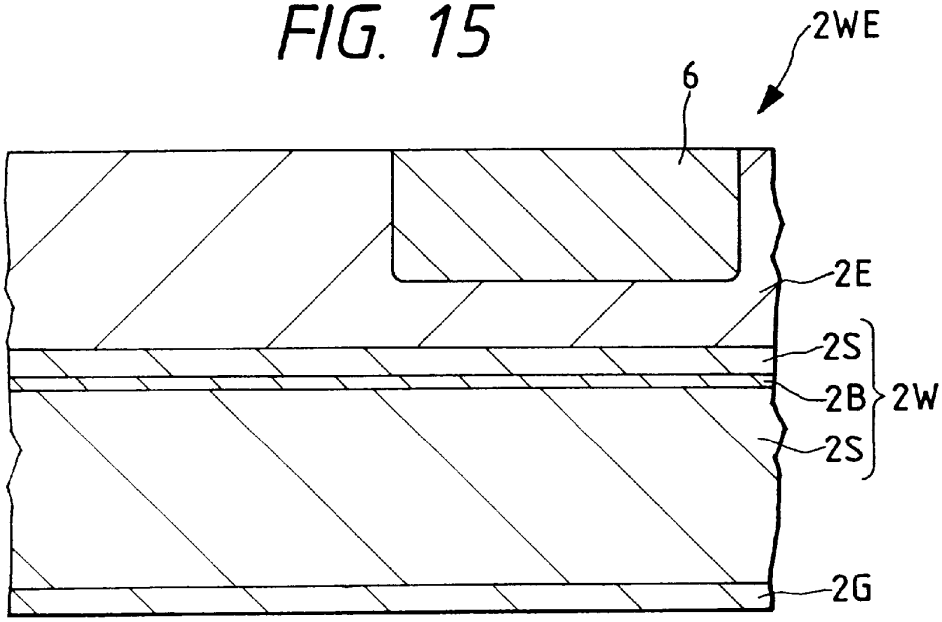

FIG. 16

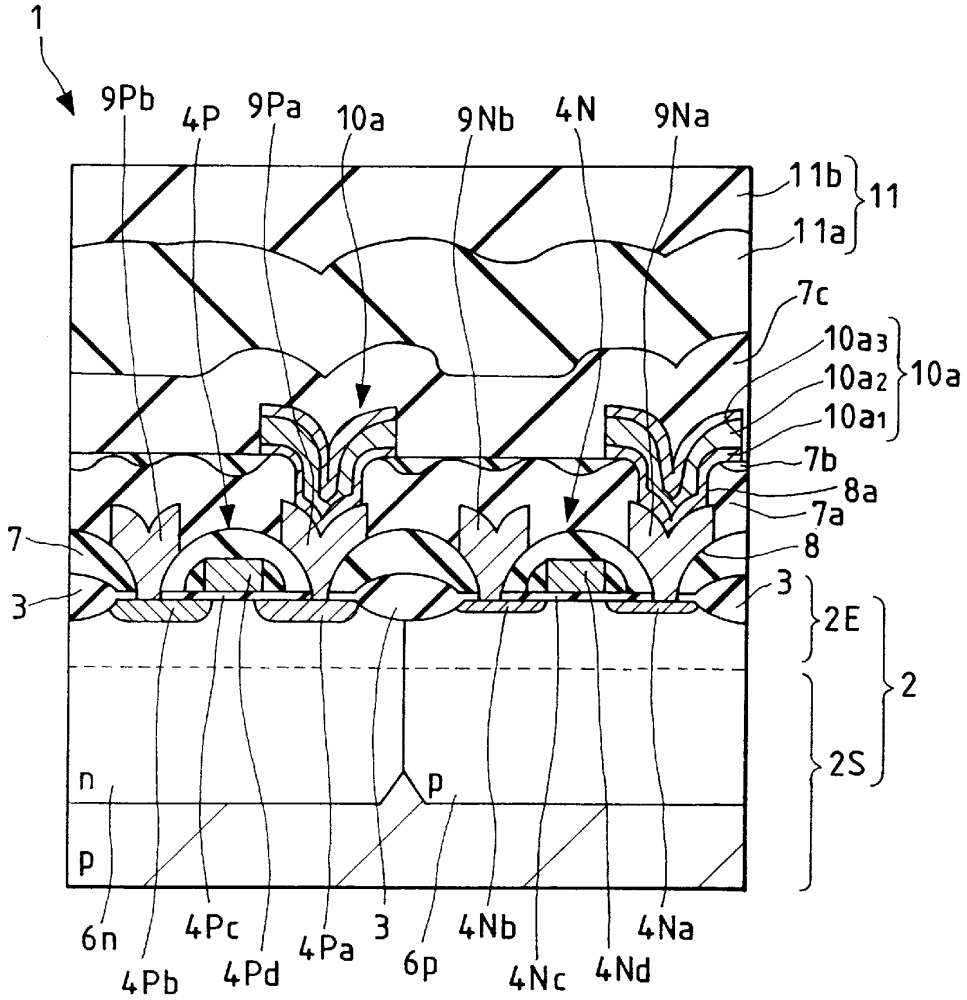
1
9Pb
4P
9Pa
10a
9Nb
4N
9Na
11b
11
11a
7c
10a3
10a2
10a
10a1
7b
8a
7a
8
7
3
3
2E
2
2S
n
p
p
6n
4Pb
4Pc
4Pd
4Pa
3
6p
4Nb
4Nc
4Nd
4Na

FIG. 17

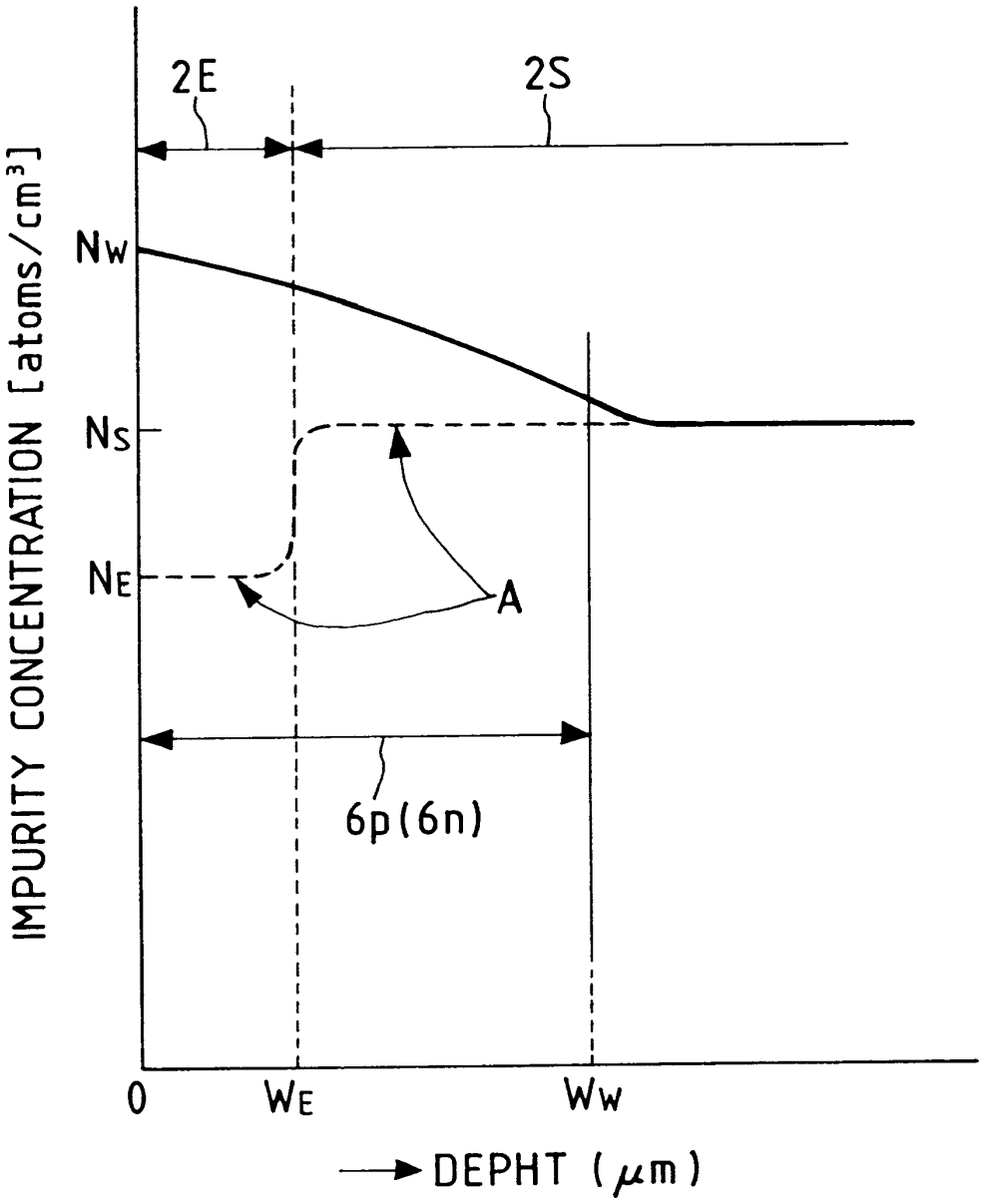
2E
2S
IMPURITY CONCENTRATION [atoms/cm³]
Nw
Ns
NE
A
6p(6n)
0
WE
Ww
DEPHT (μm)

FIG. 18
PRIOR ART

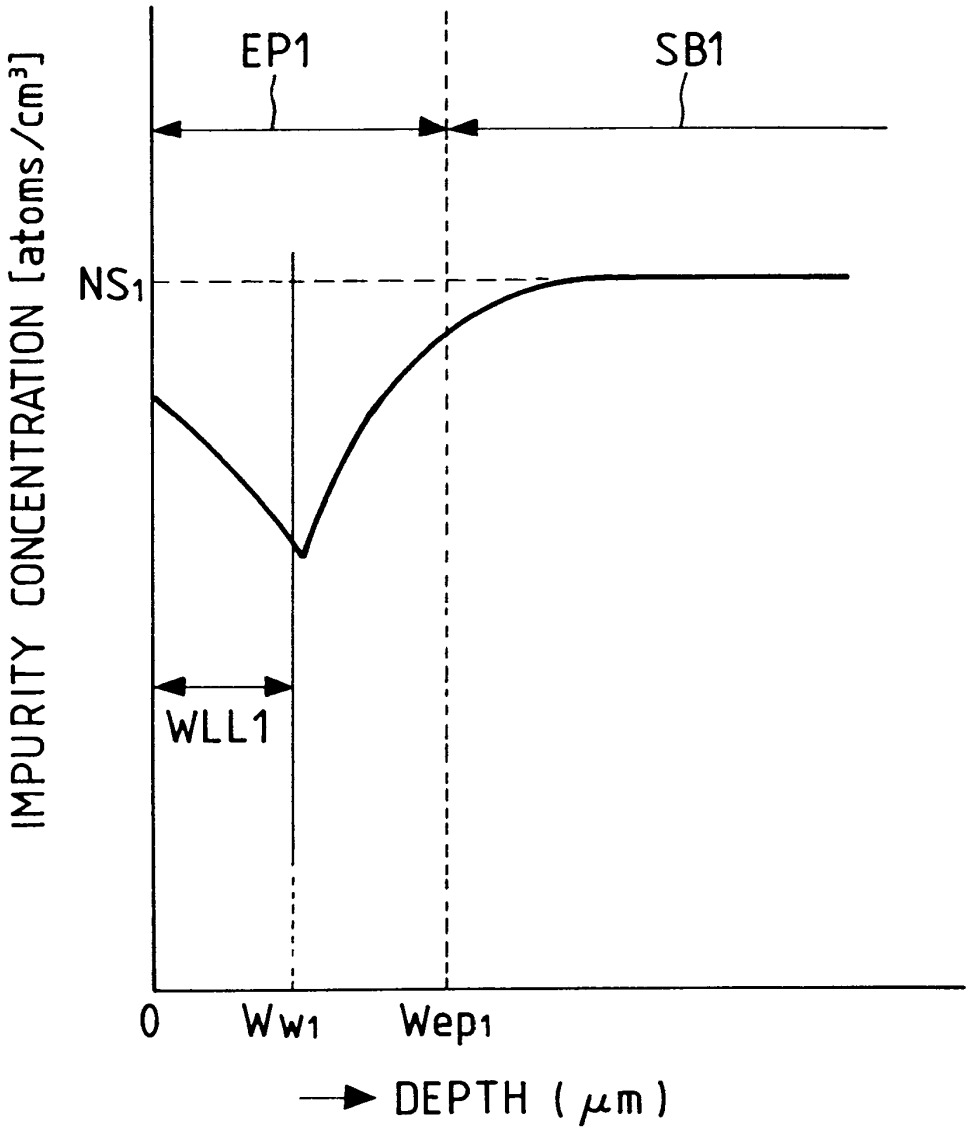

FIG. 19
PRIOR ART

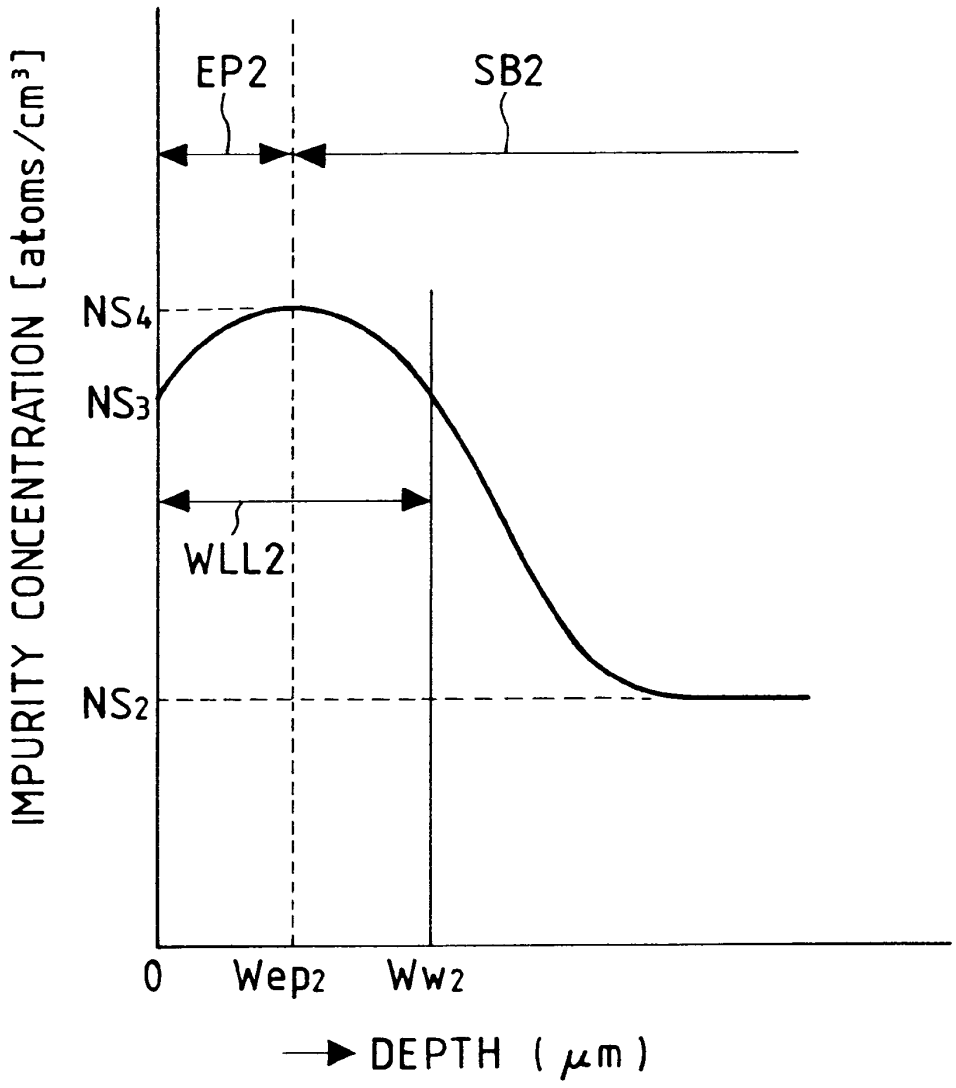

FIG. 20

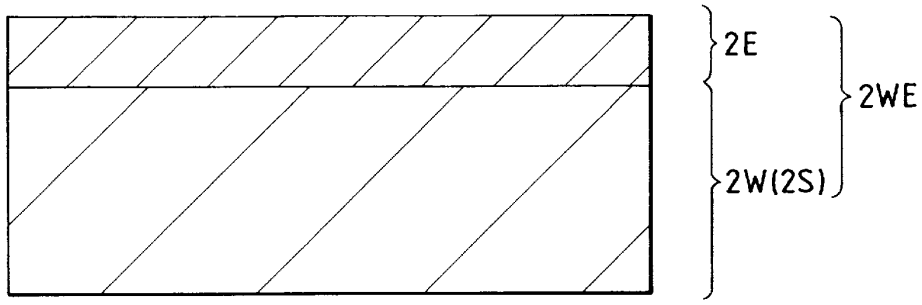

FIG. 21

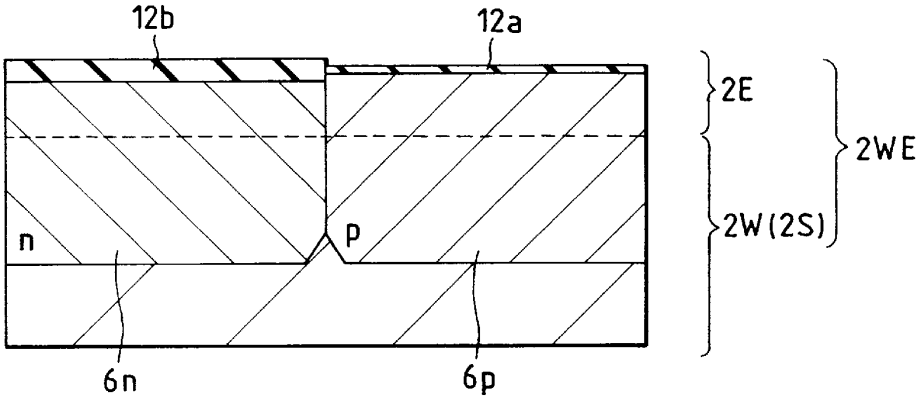

FIG. 22

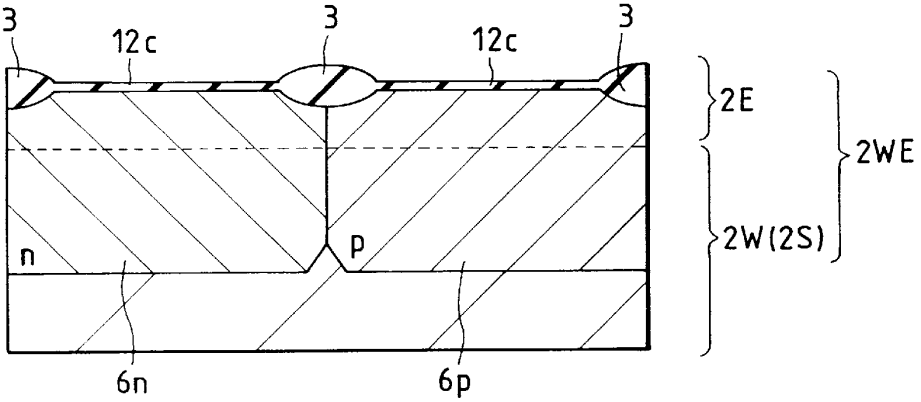

FIG. 23

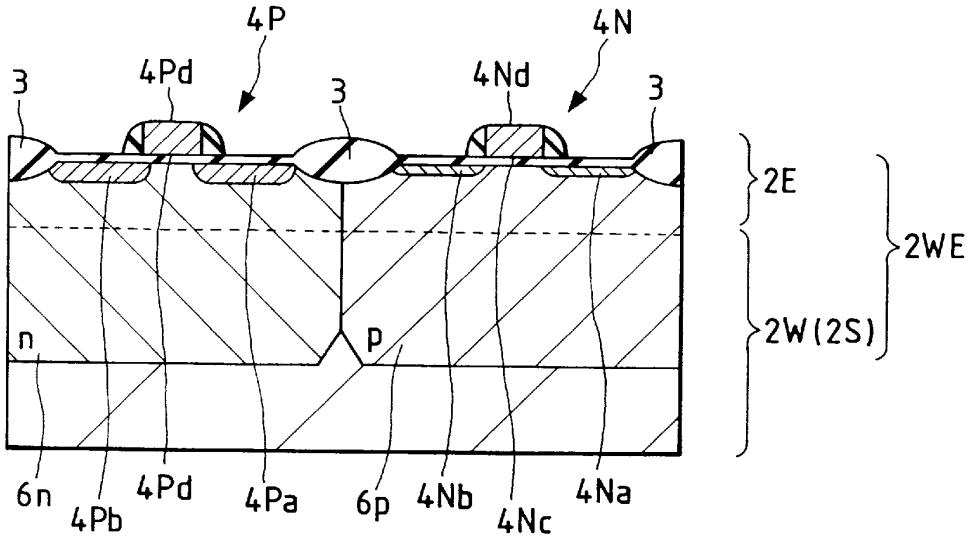
4P
4N
3
4Pd
3
4Nd
3
2E
2WE
2W(2S)
n
p
6n
4Pb
4Pd
4Pa
6p
4Nb
4Nc
4Na

FIG. 24

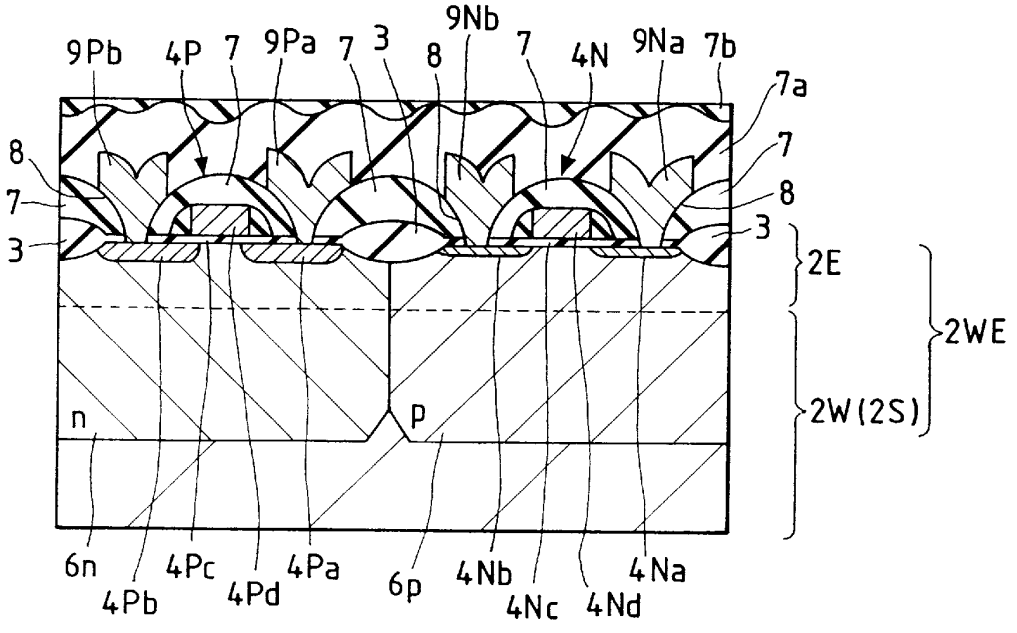
9Pb
4P
7
9Pa
7
3
9Nb
8
7
4N
9Na
7b
7a
8
7
7
8
3
3
2E
2WE
2W(2S)
n
p
6n
4Pb
4Pc
4Pd
4Pa
6p
4Nb
4Nc
4Nd
4Na

FIG. 25

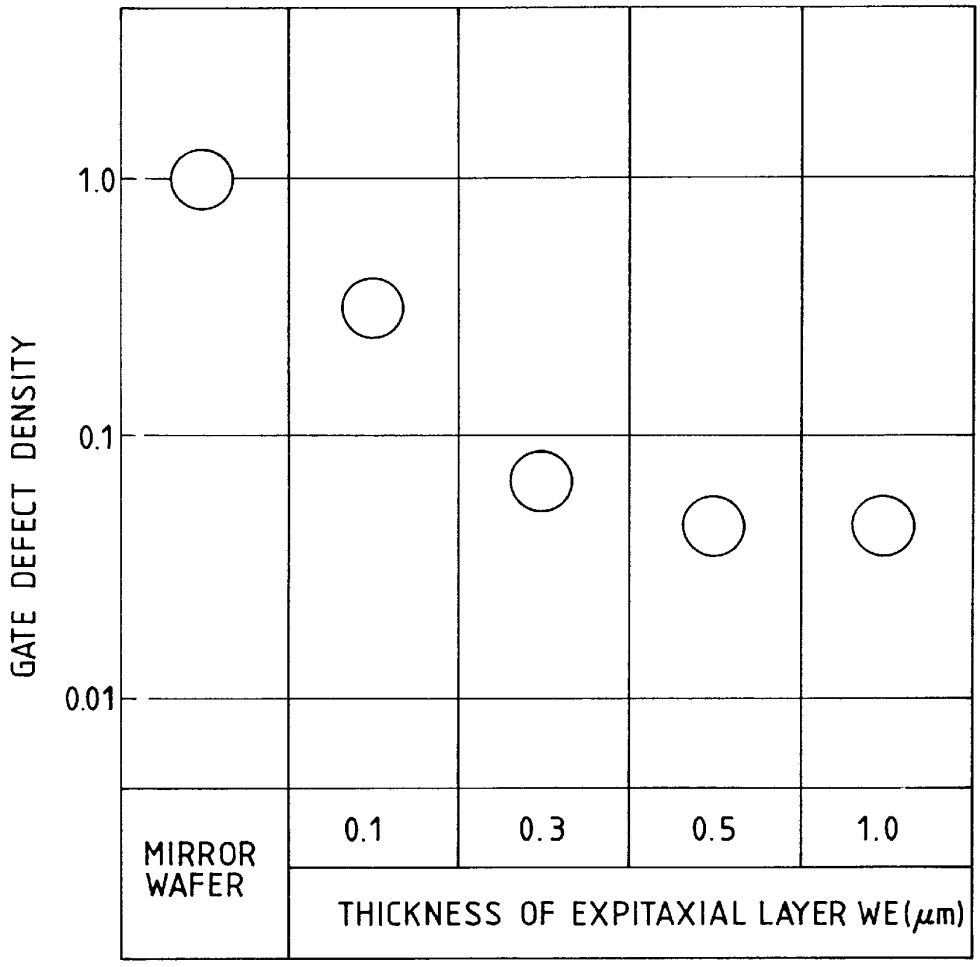
GATE DEFECT DENSITY
1.0
0.1
0.01
MIRROR WAFER
0.1
0.3
0.5
1.0
THICKNESS OF EXPITAXIAL LAYER WE(μm)

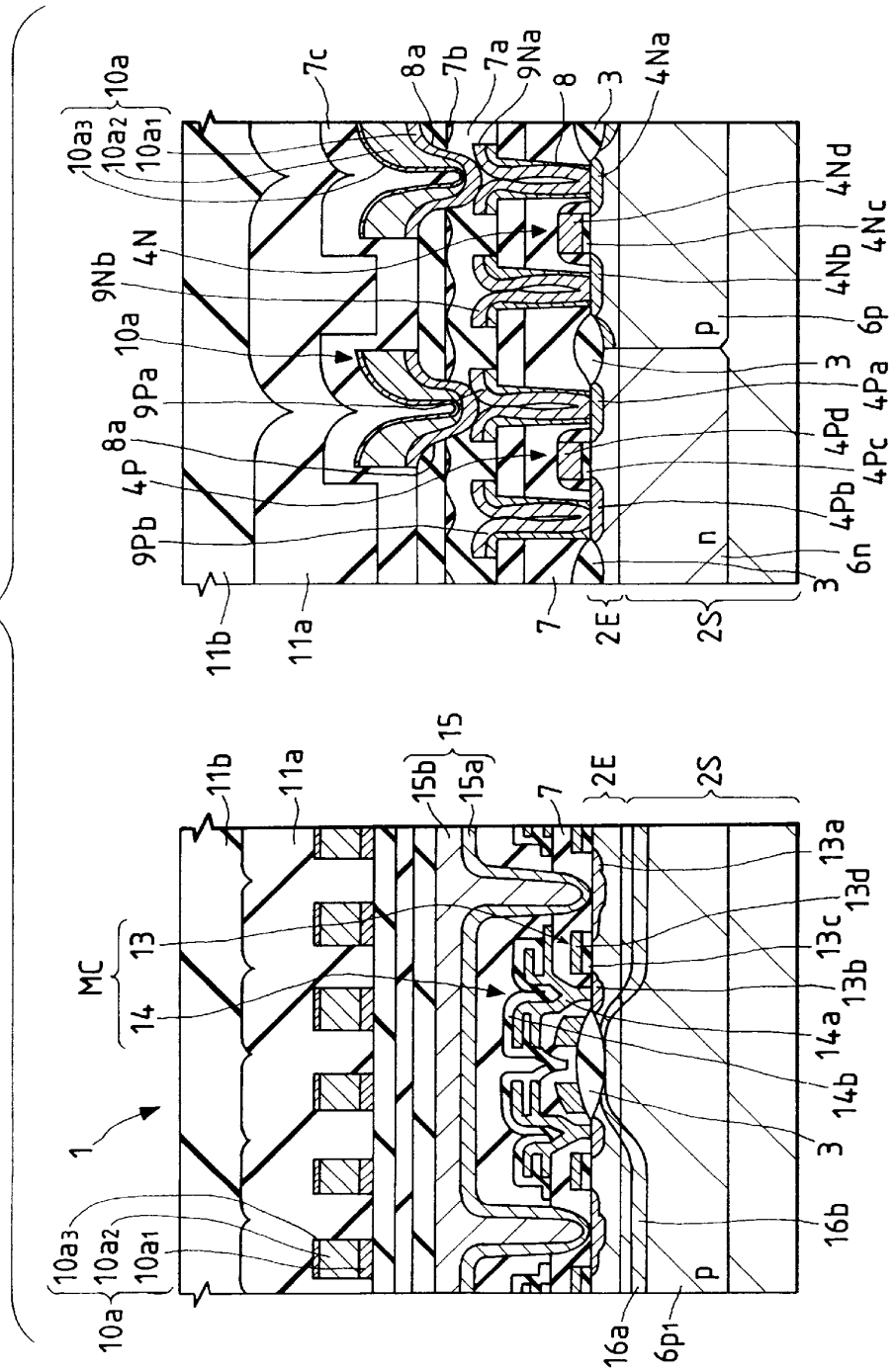
10a
10a3
10a2
10a1
7c
8a
7b
7a
9Na
8
3
4Na
4Nd
4Nc
4Nb
6p
4Pa
4Pc
4Pb
6n
9Nb
4N
10a
9Pa
8a
4P
9Pb
11b
11a
7
2E
2S
p
n
MC
13
14
1
15
15b
15a
13a
13d
13c
13b
14a
14b
16b
16a
6p1

FIG. 26(A)

FIG. 27(B)

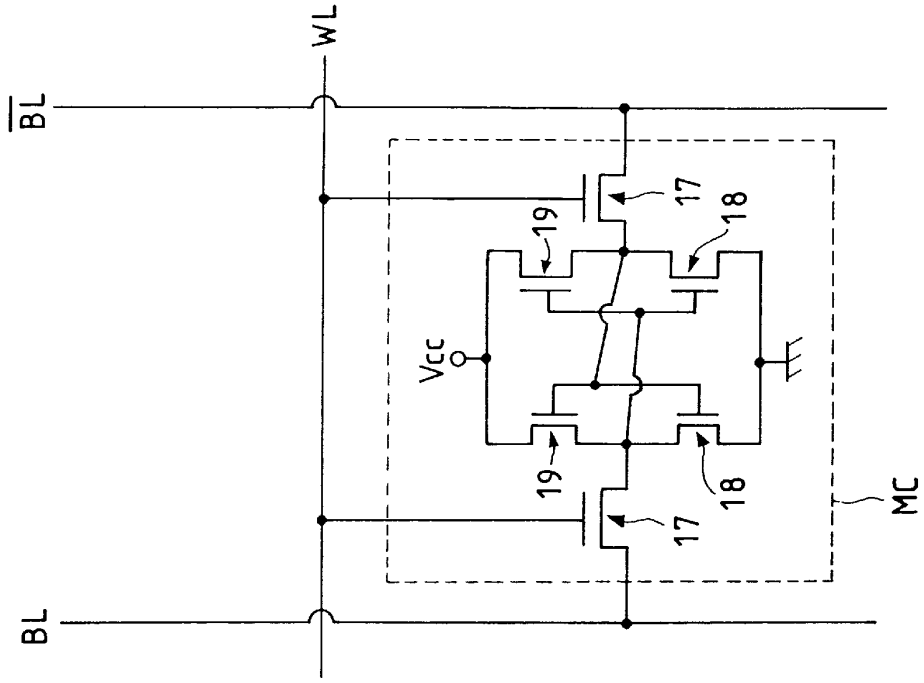

FIG. 26(B)

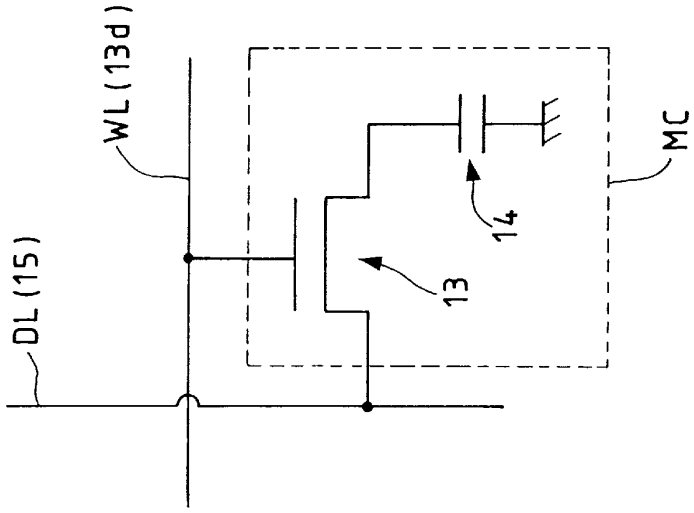

FIG. 27(A)

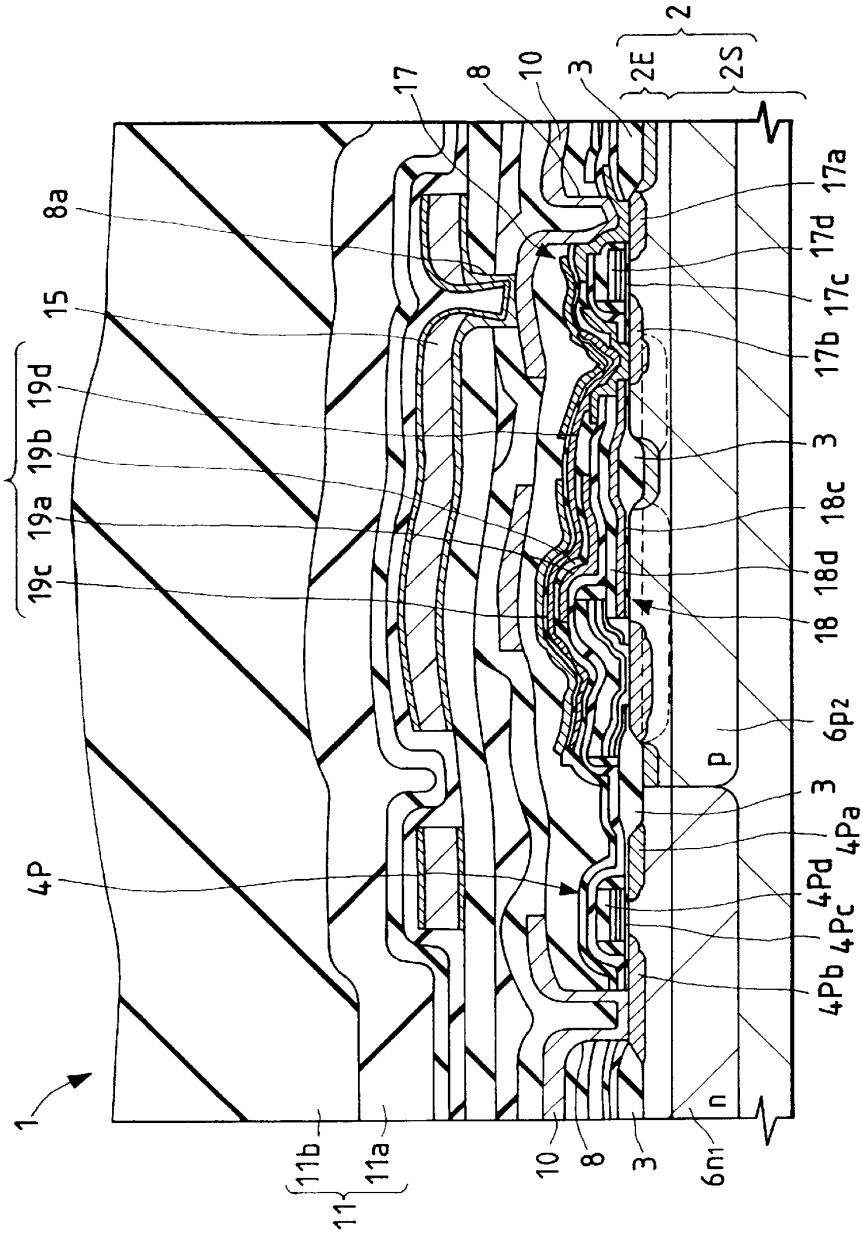
1
11b
11a
11
10
8
3
6n1
n
4P
4Pb
4Pc
4Pd
4Pa
3
p
6p2
18
18d
18c
3
17b
17c
17d
17a
19c
19a
19b
19d
19
15
8a
17
8
10
3
2E
2S
2

FIG. 28

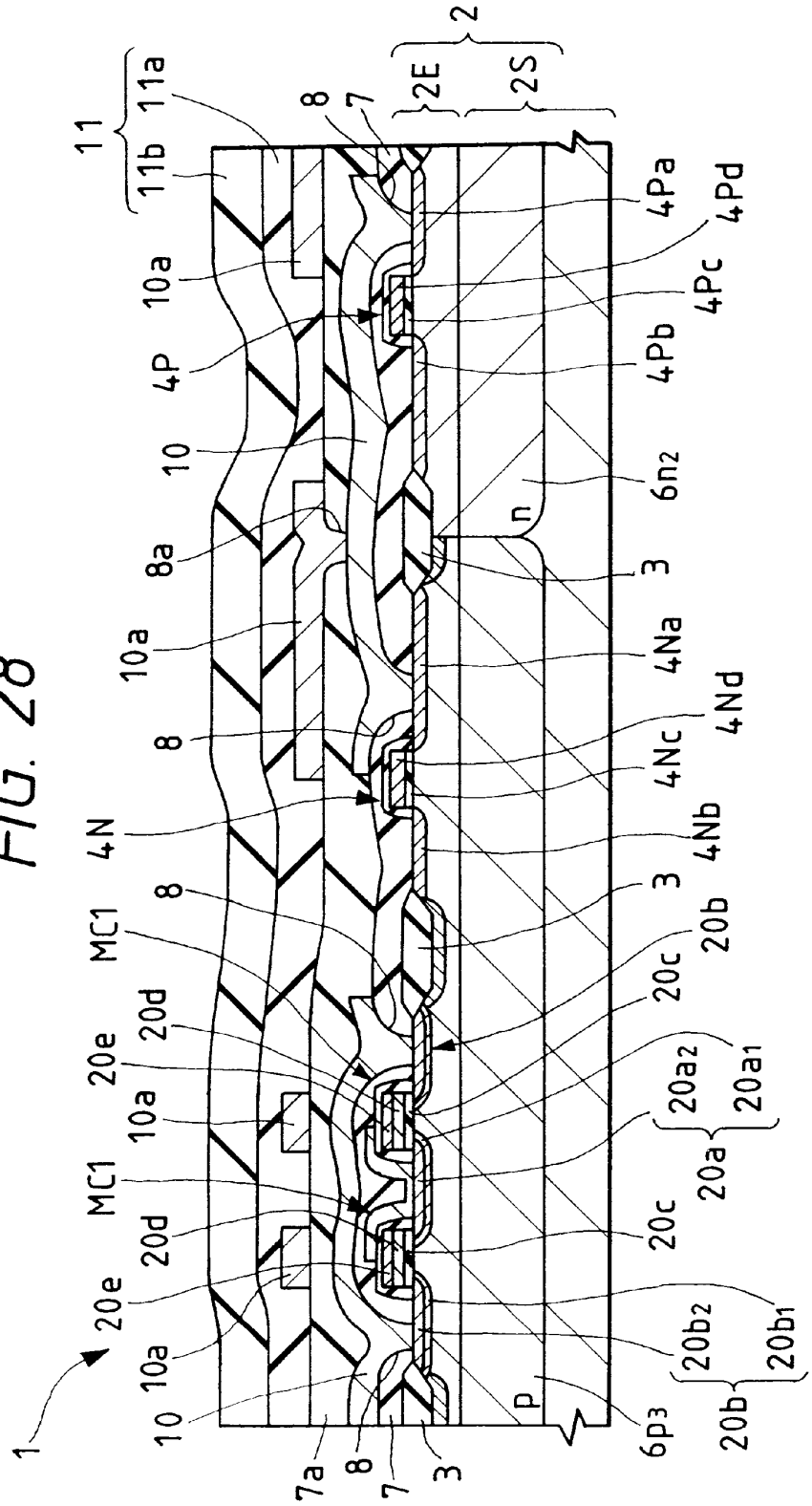
1
2
2E
2S
11
11a
11b
8
7
10a
4P
10
8a
4N
MC1
20d
20e
4Pa
4Pd
4Pc
4Pb
6n2
n
3
4Na
4Nd
4Nc
4Nb
20b
20c
20a2
20a1
20a
20b2
20b1
20b
p
6p3
7a

FIG. 29

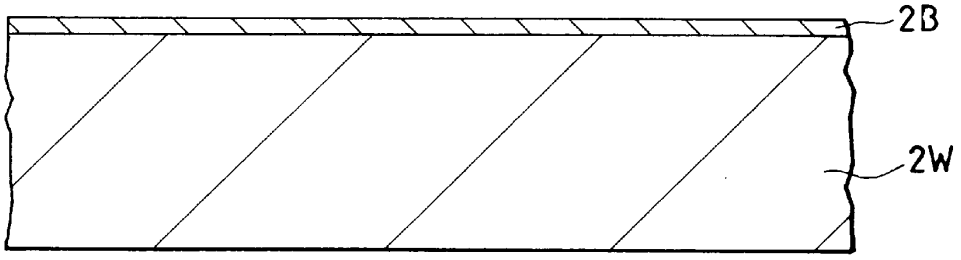

FIG. 30

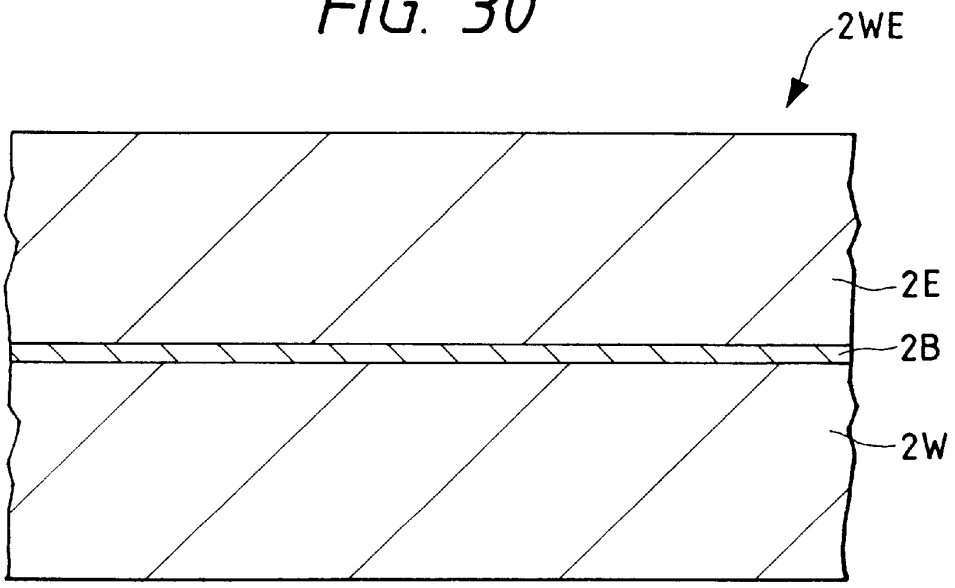

PROCESS FOR MANUFACTURING A SEMICONDUCTOR WAFER, A SEMICONDUCTOR WAFER, PROCESS FOR MANUFACTURING A SEMICONDUCTOR INTEGRATED CIRCUIT DEVICE, AND SEMICONDUCTOR INTEGRATED CIRCUIT DEVICE

This application is a Divisional application of application Ser. No. 08/508,483, filed Jul. 28, 1995 now abandoned.

BACKGROUND OF THE INVENTION

The present invention relates to a process for manufacturing a semiconductor wafer, a semiconductor wafer, a process for manufacturing a semiconductor integrated circuit device, and a semiconductor integrated circuit device and, more particularly, to a technique which is effective if applied to the so-called "epitaxial wafer manufacturing process" for forming an epitaxial layer over the surface of a semiconductor substrate body, an epitaxial wafer, a process for manufacturing a semiconductor integrated circuit device by using the epitaxial wafer, and a semiconductor integrated circuit device.

An epitaxial wafer is a semiconductor wafer which is formed with an epitaxial layer over the principal surface of a mirror-finished (or -polished) semiconductor mirror wafer (or polished wafer) by epitaxial growth. Incidentally, the epitaxial growth method is described, for example, on pp. 51 to 74 of "VLSI TECHNOLOGY", edited by S. M. Sze and issued in 1983 by McGraw-Hill. On the other hand, the polishing is described on pp. 39 to 42 of the same Publication, for example.

The epitaxial wafer is advantageous in that it is excellent in suppressing the soft errors and resisting to the latchup, and in that the gate insulating film to be formed over the epitaxial layer can have excellent breakdown characteristics to drastically reduce the defect density of the gate insulating film. Thus, application of the epitaxial wafer to the technique for manufacturing the semiconductor integrated circuit device.

As to this epitaxial wafer, there are the following two techniques.

The first technique is described on pp. 761 to 763 of "Applied Physics, Vol. 60, No. 8", issued on Aug. 10, 1991 by Japanese Association of Applied Physics. There is described an epitaxial wafer, in which a p^+-type (or n^+-type) semiconductor substrate is formed thereover with a p- (or n-) type epitaxial layer containing a p- (or n-) type impurity having a lower concentration than the p- (or n-) type impurity concentration of the semiconductor substrate.

In this case, there is described the structure in which a semiconductor region called the "well" is formed in the epitaxial layer and is formed thereover with a MOS FET. Since the well of this case is formed by the diffusion of the impurity from the surface of the epitaxial layer, the impurity concentration in the well is distributed to be high in the surface and low in its inside.

The second technique is described in Japanese Patent Laid-Open No. 260832/1989, for example and is directed to an epitaxial wafer which has a p-type epitaxial layer over a p-type semiconductor substrate. In this case, an element forming diffusion layer is formed to extend from the surface of the epitaxial layer to the upper portion of the semiconductor substrate.

Also described is a process, in which the semiconductor substrate body is doped at the time of forming the diffusion layer with a diffusion layer forming impurity so that simultaneously with the growth of the epitaxial layer over the semiconductor substrate body, the impurity in the upper portion of the semiconductor substrate body may be diffused to form the diffusion layer.

The distribution of the impurity concentration of this case is made to have such a plateau curve having a peak at the boundary between the epitaxial layer and the semiconductor substrate body that the impurity concentration is low at the surface side of the epitaxial layer, high at the boundary between the epitaxial layer and the semiconductor substrate body and low in the semiconductor substrate body.

The semiconductor integrated circuit device manufactured according to the aforementioned first technique is excellent in performance and reliability but has a problem in the cost because the semiconductor substrate used contains an (p^+-type or n^+-type) impurity in high concentration, is expensive, because an epitaxial layer having a large thickness is formed over the semiconductor substrate.

According to the aforementioned second technique, on the other hand, the diffusion layer is formed by the so-called "upper diffusion" to diffuse the impurity in the upper portion of the semiconductor substrate. As a result, the impurity concentration is so difficult to set that there arise a problem that the diffusion layer forming accuracy drops. Another problem is that it is obliged to change the LSI (i.e., Large Scale Integration circuit) manufacturing process using the so-called "mirror wafer".

SUMMARY OF THE PRESENT INVENTION

An object of the present invention is to provide a technique which can be implemented at comparatively low cost through the use of a semiconductor wafer having a semiconductor single crystal layer over a semiconductor substrate.

Another object of the present invention is to provide a technique capable of improving the performance and reliability of a semiconductor integrated circuit device and of simultanesusly reducing the cost for the semiconductor integrated circuit device.

An object of the present invention is to provide a technique capable of facilitating the control of forming a semiconductor region on the semiconductor wafer which has the semiconductor single crystal layer over the semiconductor substrate.

An object of the present invention is to provide a technique capable of using a process for manufacturing the semiconductor integrated circuit device using the so-called "mirror wafer", as it is.

The aforementioned and other objects and the novel features of the present invention will become apparent from the following description to be made with reference to the accompanying drawings.

Representatives of the invention disclosed herein will be briefly described in the following.

Specifically, according to the present invention, there is provided a process for manufacturing a semiconductor wafer, comprising the step of forming such a semiconductor single crystal layer over the surface of a relatively lightly doped semiconductor substrate body, which contains an impurity of a predetermined conduction type, as contains an impurity having the same conduction type as that of said impurity and the same concentration as the designed one of said impurity.

Moreover, according to the present invention, there is provided a process for manufacturing a semiconductor inte-

grated circuit device, comprising: the step of preparing a relatively lightly doped semiconductor substrate body, which contains an impurity of a predetermined conduction type, with a semiconductor single crystal layer formed over the surface of the semiconductor substrate body and containing an impurity having the same conduction type as that of said impurity and the same concentration as the designed one of said impurity; and the step of forming an oxide film over said semiconductor single crystal layer.

Moreover, according to the present invention, there is provided a process for manufacturing a semiconductor integrated circuit device, comprising: the step of preparing a relatively lightly doped semiconductor substrate body, which contains an impurity of a predetermined conduction type, with a semiconductor single crystal layer formed over the surface of the semiconductor substrate body and containing an impurity having the same conduction type as that of said impurity and a concentration not higher than that of said semiconductor substrate body; the step of forming a first semiconductor region extending from the surface of said semiconductor single crystal layer to the upper portion of said semiconductor substrate body and having the same conduction type as that of said impurity and its impurity concentration gradually lowered depthwise of said semiconductor single crystal layer; and the step of forming an oxide film over said semiconductor region.

Moreover, according to the present invention, there is provided a semiconductor integrated circuit device manufacturing method comprising the step of doping said semiconductor single crystal layer with the ions an impurity and then thermally diffusing said impurity, at the step of forming said first semiconductor region.

Moreover, according to the present invention, there is provided a semiconductor integrated circuit device manufacturing method characterized in that said first semiconductor region is a well to be used for forming a complementary MOS.FET (Metal-Oxide-Semiconductor.Field-Effect-Transistor) circuit (i.e., for forming a complementary MIS (Metal-Insulator-Semiconductor).FET circuit).

According to the aforementioned semiconductor wafer manufacturing process of the present invention, any semiconductor substrate body of high price and density (of p^+- or n^+-type) need not be used, and the semiconductor single crystal layer can be thinned, so that the cost for the semiconductor wafer capable of realizing high element characteristics and reliability can be lowered.

According to the aforementioned semiconductor integrated circuit device manufacturing process of the present invention, moreover, a gate insulating film having an excellent film quality can be formed by forming the gate insulating film of a MOS.FET over a semiconductor single crystal layer so that the gate insulating film can have its breakdown voltage raised to reduce the defect density of the gate insulating film. Moreover, the semiconductor substrate body of high price and density need not be used, but the semiconductor single crystal layer can be thinned to reduce the cost for the semiconductor integrated circuit device having high element characteristics and reliability.

According to the aforementioned semiconductor integrated circuit device manufacturing process of the present invention, moreover, the degree of freedom for setting the impurity concentration and depth is so high when a semiconductor region such as a well is formed in the semiconductor substrate, as to facilitate the control of the formation. As a result, it is possible to reduce the defective products thereby to improve the production yield. Moreover, the cost for the semiconductor integrated circuit device can be lowered.

According to the aforementioned semiconductor integrated circuit device manufacturing process of the present invention, moreover, the impurity concentration of the semiconductor substrate body below the semiconductor single crystal layer is made higher than that of the semiconductor single crystal layer, so that the resistance of the semiconductor substrate body can be relatively lowered to improve the resistance to the latchup.

According to the aforementioned semiconductor integrated circuit device manufacturing process of the present invention, moreover, since the first semiconductor region is formed by the ion implantation method and the thermal diffusion method, the semiconductor integrated circuit device can be manufactured without being accompanied by any change in the design or manufacture process but by using the same method as that of the semiconductor integrated circuit device having the so-called "mirror wafer", when it is to be manufactured by using the semiconductor wafer having the semiconductor single crystal layer over the semiconductor substrate body.

According to the aforementioned semiconductor integrated circuit device manufacturing process of the present invention, moreover, since the memory cell of the dynamic type random access memory is formed over the semiconductor single crystal layer having less defects such as the precipitation of oxygen, it is possible to reduce the junction leakage current in the source region and the drain region of the transfer MOS.FET of the memory cell. Since, moreover, the charge leakage in the capacitor of the memory cell can be suppressed to elongate the charge storage time period, it is possible to improve the refresh characteristics. As a result, it is possible to improve the performance, reliability and production yield of the dynamic type random access memory.

According to the aforementioned semiconductor integrated circuit device manufacturing process of the present invention, moreover, since the memory cell of the static type random access memory is formed over the semiconductor single crystal layer having less defects such as the precipitation of oxygen, the junction leakage current of the source region and drain region of the MOS FET composing the memory cell can be reduced to improve the data retention level thereby to reduce the data retention fault percentage. As a result, it is possible to improve the performance, reliability and production yield of the static type random access memory.

According to the aforementioned semiconductor integrated circuit device manufacturing process of the present invention, moreover, the memory cell of a read only memory capable of electrically erasing and programming data is formed over the semiconductor single crystal layer having less defects such as the precipitation of oxygen, so that the resistance to the data programming can be improved and so that the dispersion of the data erasure can be reduced. As a result, it is possible to improve the performance, reliability and production yield of the read only memory capable of electrically erasing and programming the data.

BRIEF DESCRIPTION OF THE DRAWINGS

FIG. **1** is a section showing an essential portion of a semiconductor integrated circuit device according to one embodiment of the present invention;

FIG. **2** is a top plan view showing a semiconductor wafer to be used at a step of manufacturing the semiconductor integrated circuit device of FIG. **1**;

FIG. **3** is a section showing an essential portion at a step of manufacturing the semiconductor integrated circuit device of FIG. **1**;

FIG. **4** is a section showing an essential portion at the step, as subsequent to FIG. **3**, of manufacturing the semiconductor integrated circuit device of FIG. **1**;

FIG. **5** is a section showing an essential portion at the step, as subsequent to FIG. **4**, of manufacturing the semiconductor integrated circuit device of FIG. **1**;

FIG. **6** is a section showing an essential portion at the step, as subsequent to FIG. **5**, of manufacturing the semiconductor integrated circuit device of FIG. **1**;

FIG. **7** is a section showing an essential portion at the step, as subsequent to FIG. **6**, of manufacturing the semiconductor integrated circuit device of FIG. **1**;

FIG. **8** is a section showing an essential portion at the step, as subsequent to FIG. **7**, of manufacturing the semiconductor integrated circuit device of FIG. **1**;

FIG. **9** is a section showing an essential portion of a semiconductor integrated circuit device according to another embodiment of the present invention;

FIG. **10** is a section showing an essential portion at a step of manufacturing the semiconductor integrated circuit device of FIG. **9**;

FIG. **11** is a section showing an essential portion at the step, as subsequent to FIG. **10**, of manufacturing the semiconductor integrated circuit device of FIG. **9**;

FIG. **12** is a section showing an essential portion of a semiconductor integrated circuit device according to another embodiment of the present invention;

FIG. **13** is a section showing an essential portion at a step of manufacturing the semiconductor integrated circuit device of FIG. **12**;

FIG. **14** is a section showing an essential portion at the step, as subsequent to FIG. **13**, of manufacturing the semiconductor integrated circuit device of FIG. **12**;

FIG. **15** is a section showing an essential portion at the step, as subsequent to FIG. **14**, of manufacturing the semiconductor integrated circuit device of FIG. **12**;

FIG. **16** is a section showing an essential portion of a semiconductor integrated circuit device according to another embodiment of the present invention;

FIG. **17** is an impurity distribution diagram in the semiconductor integrated circuit device of FIG. **16** and has an abscissa indicating the depth from the surface of an epitaxial layer **2**E and an ordinate indicating an impurity concentration;

FIG. **18** is an impurity distribution diagram in the semiconductor integrated circuit device, as has been described in the prior art and has an abscissa indicating the depth from the surface of an epitaxial layer EP**1** and an ordinate indicating an impurity concentration;

FIG. **19** is an impurity distribution diagram in the semiconductor integrated circuit device, as has been described in the prior art and has an abscissa indicating the depth from the surface of an epitaxial layer EP**2** and an ordinate indicating an impurity concentration;

FIG. **20** is a section showing an essential portion of a semiconductor substrate at a step of manufacturing the semiconductor integrated circuit device of FIG. **16**;

FIG. **21** is a section showing an essential portion of the semiconductor substrate at the step, as subsequent to FIG. **20**, of manufacturing the semiconductor integrated circuit device of FIG. **16**;

FIG. **22** is a section showing an essential portion of the semiconductor substrate at the step, as subsequent to FIG. **21**, of manufacturing the semiconductor integrated circuit device of FIG. **16**;

FIG. **23** is a section showing an essential portion of the semiconductor substrate at the step, as subsequent to FIG. **22**, of manufacturing the semiconductor integrated circuit device of FIG. **16**;

FIG. **24** is a section showing an essential portion of the semiconductor substrate at the step, as subsequent to FIG. **23**, of manufacturing the semiconductor integrated circuit device of FIG. **16**;

FIG. **25** is a graph diagram for explaining the effects of the semiconductor integrated circuit device of the present embodiment;

FIG. **26**(A) is a section showing an essential portion of a semiconductor integrated circuit device according to another embodiment of the present invention;

FIG. **26**(B) is a circuit diagram showing a memory cell of the semiconductor integrated circuit device of FIG. **26**(A);

FIG. **27**(A) is a section showing an essential portion of a semiconductor integrated circuit device according to another embodiment of the present invention;

FIG. **27**(B) is a circuit diagram showing a memory cell of the semiconductor integrated circuit device of FIG. **27**(A);

FIG. **28** is a section showing an essential portion of a semiconductor integrated circuit device according to another embodiment of the present invention;

FIG. **29** is a section showing an essential portion at a step of manufacturing a semiconductor integrated circuit device according to another embodiment of the present invention; and

FIG. **30** is a section showing an essential portion at the step, as subsequent to FIG. **29**, of manufacturing a semiconductor integrated circuit device according to another embodiment of the present invention.

DESCRIPTION OF THE PREFERRED EMBODIMENTS

The present invention will be described in detail in the following in connection with its embodiments with reference to the accompanying drawings.

(Embodiment 1)

FIG. **1** is a section showing an essential portion of a semiconductor integrated circuit device according to one embodiment of the present invention; FIG. **2** is a top plan view of a semiconductor wafer to be used in a process for manufacturing the semiconductor integrated circuit device of FIG. **1**; and FIGS. **3** to **8** are sections showing an essential portion in a process for manufacturing the semiconductor integrated circuit device of FIG. **1**.

As shown in FIG. **1**, a semiconductor substrate **2** constituting a semiconductor integrated circuit device **1** of the present embodiment 1 is constructed of a semiconductor substrate body **2**S, an epitaxial layer (i.e., semiconductor single crystal layer) **2**E and a gettering layer (i.e., trap region) **2**G.

Incidentally, the gettering layer is described, for example, on pp. 42 to 44 of "VLSI TECHNOLOGY", edited by S. M. Sze and issued in 1983 by McGraw-Hill.

The semiconductor substrate body **2**S is made of a single crystal of p^--type silicon (Si) having a thickness of about 500 to 800 μm, for example. The semiconductor substrate body **2**S is doped with a p-type impurity such as boron (B) in a concentration of about 1.3×10^{15} atoms/cm^3.

Over the principal surface of the semiconductor substrate body **2**S, there is formed the epitaxial layer **2**E which is made of a single crystal of p^--type Si, for example. This

epitaxial layer **2**E is doped with a p-type impurity such as boron in a concentration equal to the designed one of the semiconductor substrate body **2**S, e.g., 1.3×10^{15} atoms/cm^3.

Here, the designed impurity concentration is intended to cover an allowable value. Specifically, the equality to the designed impurity concentration means that, in case the semiconductor substrate body **2**S has its designed impurity concentration expressed by [impurity concentration: A]± [allowable value: α] and has an actual impurity concentration of A, the semiconductor substrate body **2**S and the epitaxial layer **2**E have equal impurity concentrations if the actual impurity concentration of the epitaxial layer **2**E is not at A but within A±α.

Thus, in the present embodiment 1, the p^--type epitaxial layer **2**E is formed over the relatively lightly doped p^--type semiconductor substrate body **2**S, and any precious heavily doped p^+-type semiconductor substrate body is not used so that the cost for the semiconductor substrate **2** can be reduced to one half or so.

In case the cost for the semiconductor substrate of the prior art having the p^--type epitaxial layer formed over the p^+-type semiconductor substrate body, for example, is 2.5 to 3 times as high as that of the ordinary semiconductor substrate having no epitaxial layer. On the contrary, the cost for the semiconductor substrate of the present embodiment 1 can be suppressed within 1.5 times as high as that of the ordinary semiconductor substrate. As a result, the cost for the semiconductor integrated circuit device can be lowered.

The epitaxial layer **2**E is made relatively thin to have a thickness of about 1 μm. As a result, the following effects can be attained.

At first, it is easy to control the setting of the thickness or resistivity of the epitaxial layer **2**E. Secondly, for the first reason, the apparatus used for forming the epitaxial layer is not required to have a high filming accuracy such as thickness uniformity or doping uniformity of the deposited film so that it needs not be expensive. Thirdly, the epitaxial layer can be easily formed to improve the throughput. Fourthly, for the first, second and third reasons, it is possible to reduce the cost for the semiconductor substrate **2**.

The lower limit of the thickness of the epitaxial layer **2**E is one half or more of the thickness of the gate insulating film in the later-described MOS.FET. This setting is made while considering that one half of the thickness of the gate insulating film of the MOS.FET goes into the side of the semiconductor substrate **2** when the gate insulating film is formed.

Specifically, in case the epitaxial layer **2**E is made thinner than one half of the thickness of a gate insulating film, its entirety is covered with the gate insulating film when this film is to be formed over the epitaxial layer **2**E. As a result, the structure is made such that the gate insulating film is formed over the semiconductor substrate body **2**S. This structure loses the effect of the case, in which the gate insulating film is formed over the epitaxial layer **2**E, namely, that an excellent gate insulating film can be formed to improve its breakdown voltage.

Incidentally, the lower limit of the thickness of the epitaxial layer **2**E is frequently set to 0.3 μm by evaluating the performance of the gate insulating film (e.g., the gate breakdown voltage), as will be described with reference to FIG. **25**.

On the other hand, the upper limit of the thickness of the epitaxial layer **2**E cannot be generally said because it depends upon the product or manufacturing conditions, but may desirably be less than 5 μm, for example, if the following is considered.

Specifically, first of all, the upper surface of the epitaxial layer **2**E can retain flatness. If the epitaxial layer **2**E is made thicker, the level difference of the principal surface of the semiconductor substrate body **2**S is accordingly increased, but no substantial difference is caused by the thickness of such extent.

If the principal surface has an excessively large roughness, a larger level difference than the focal depth may be made in a photolithography for the later-described MIS device forming step, thus causing a problem that the pattern cannot be formed by the photolithography.

Secondly, the cost for the mother material of the semiconductor substrate **2** or the semiconductor wafer (i.e., the later-described epitaxial wafer) can be suppressed within a low price. If the epitaxial layer **2**E is thickened, it is difficult to control the filming operation, as described above, so that the cost for the semiconductor wafer (i.e., the later-described epitaxial wafer) rises. However, this thickness will not invite a drastic increase in the cost.

Thirdly, the roughness, if any, on the principal surface of the semiconductor substrate body **2**S can be ignored. With the thickness of this order, the roughness will not make a large level difference.

Fourthly, when the epitaxial layer is to be formed over the semiconductor wafer (i.e., the later-described mirror wafer), it is possible to prevent any roughness (i.e., crown) from being formed in the vicinity of the outer circumference of the principal surface of the semiconductor wafer (i.e., the later-described mirror wafer). In case a thick epitaxial layer is to be formed over the semiconductor wafer (i.e., the later-described mirror wafer), the roughness called the crown will be formed in the vicinity of the outer periphery of the principal surface of the semiconductor wafer (i.e., the later-described mirror wafer). With the thickness of that order, the roughness is not formed (or can be ignored).

Considering the aforementioned points, the thickness of the epitaxial layer **2**E is preferred to range from 0.3 μm to 5 μm. However, the range of 0.3 μm to 3 μm is frequently employed, and the optimum range is from 0.3 μm to 1.0 μm.

Over the principal surface of the epitaxial layer **2**E, there is formed a field insulating film **3** which is made of silicon dioxide (SiO_2), for example. Incidentally, a channel stopper region is formed below the field insulating film **3**, although not shown.

The element forming region, as enclosed by the field insulating film **3**, is formed, for example, with an n-channel MOS.FET (as will be shortly referred to as "nMOS") **4**N and a p-channel MOS.FET (as will be shortly referred to as "pMOS") **4**P, and these nMOS **4**N and pMOS **4**P constitute a CMOS (i.e., Complementary Metal Oxide Semiconductor) circuit. Incidentally, the following description is directed to the MOS.FET, but the present invention may naturally be modified by a MIS.FET.

In the present embodiment 1, however, both the nMOS **4**N and the pMOS **4**P are given an ordinary MOS.FET structure but should not be limited thereto and may be made of MOS.FETs having the LDD (i.e., Lightly Doped Drain) structure.

The nMOS **4**N has the following components. Specifically, the NMOS **4**N is composed of: a pair of semiconductor regions **4**N*a* and **4**N*b* formed in the epitaxial layer **2**E and apart from each other; a gate insulating film **4**N*c* formed over the epitaxial layer **2**E; and a gate electrode **4**N*d* formed over the gate insulating film **4**N*c*.

The semiconductor regions **4**N*a* and **4**N*b* are regions for forming the source-drain regions of the nMOS **4**N. The

semiconductor regions **4N***a* and **4N***b* are doped with an n-type impurity such as phosphor (P) or arsenic (As) in a concentration (dose) of about 1×10^{15} atoms/cm^2. The semiconductor regions **4N***a* and **4N***b* are made as deep as about 0.5 μm and formed in the range of the thickness of the epitaxial layer **2E**.

The gate insulating film **4N***c* is made of SiO_2 having a thickness of about 18 nm, for example, and formed over the epitaxial layer **2E**. As a result, the following effects can be achieved.

First of all, by forming the gate insulating film **4N***c* of the MOS.FET over the semiconductor single crystal layer **2E** formed of the epitaxial layer **2E**, the gate insulating film **4N***c* having an excellent film quality can be formed, as described above, to improve its breakdown voltage. Secondly, the defect density (i.e., the number of defects to be caused within a predetermined range) of the gate insulating film **4N***c* can be improved (reduced) by one figure or more.

The gate electrode **4N***d* is made of a single layer film of poly-silicon having a low resistance, for example. Here, the gate electrode **4N***d* is not limited to the single layer film of poly-silicon of low resistance but can be modified in various manners. For example, the gate electrode **4N***d* may be constructed by laminating a silicide film of tungsten silicide (WSi_2) over the poly-silicon film of low resistance.

Incidentally, a semiconductor region **5S***a* formed over the epitaxial layer **2E** is a region for setting the substrate potential at the side of the nMOS **4N**. This semiconductor region **5S***a* is doped with a p-type impurity such as boron in a concentration (.dose) of about 1×10^{15} atoms/cm^2.

On the other hand, the pMOS **4P** is formed in an n-well **6** which is formed over the semiconductor substrate **2**. The n-well **6** is doped with an n-type impurity such as phosphor or arsenic in a concentration (dose) of 1×10^{13} atoms/cm^2. The n-well **6** is as deep as about 1.5~4 μm and extends deeper than the epitaxial layer **2E**. Specifically, the n-well **6** is formed in the epitaxial layer **2E** and the semiconductor substrate body **2S** to have a larger depth than the film thickness of the epitaxial layer **2E**.

The pMOS **4P** has the following components. Specifically, the pMOS **4P** is composed of: a pair of semiconductor regions **4P***a* and **4P***b* formed over the epitaxial layer **2E** and apart from each other; a gate insulating film **4P***c* formed over the epitaxial layer **2E**; and a gate electrode **4P***d* formed over the gate insulating film **4P***c*.

The semiconductor regions **4P***a* and **4P***b* are regions for forming the source-drain regions of the pMOS **4P**. The semiconductor regions **4P***a* and **4P***b* are doped with an p-type impurity such as boron in a concentration (dose) of about 1×10^{18} atoms/cm^2. The semiconductor regions **4P***a* and **4P***b* are made as deep as about 0.5 μm and formed in the range of the thickness of the epitaxial layer **2E**.

The gate insulating film **4P***c* is made of SiO_2 having a thickness of about 18 nm, for example, and formed over the epitaxial layer **2E**. As a result, the same effects as those of the nMOS **4N** can be achieved.

First of all, the gate insulating film **4P***c* having an excellent film quality can be formed, to improve its breakdown voltage. Secondly, the defect density of the gate insulating film **4P***c* can be improved (or reduced) by one figure or more.

The gate electrode **4P***d* is made of a single layer film of poly-silicon having a low resistance, for example. Here, the gate electrode **4P***d* is not limited to the single layer film of poly-silicon of low resistance but can be modified in various manners. For example, the gate electrode **4P***d* may be constructed by laminating a silicide film of WSi_2 over the poly-silicon film of low resistance.

Incidentally, a semiconductor region **5S***b* formed over the epitaxial layer **2E** is a region for setting the substrate potential at the side of the pMOS **4P**. This semiconductor region **5S***b* is doped with an n-type impurity such as phosphor or arsenic in a concentration (dose) of about 1×10^{18} atoms/cm^2.

On the semiconductor substrate **2**, there is deposited an insulating film **7** which is made of SiO_2, for example. This insulating film **7** is formed in predetermined positions with connection holes **8** for exposing the semiconductor regions **4N***a* and **4N***b* of the nMOS **4N**, the semiconductor regions **4P***a* and **4P***b* of the pMOS **4P**, and the semiconductor regions **5S***a* and **5S***b* for the substrate potential to the outside.

The semiconductor regions **4N***a* and **4N***b* of the aforementioned nMOS **4N** are electrically connected with electrodes **9N***a* and **9N***b*, respectively, through the connection holes **8**. On the other hand, the semiconductor regions **4P***a* and **4P***b* of the pMOS **4P** are electrically connected with electrodes **9P***a* and **9P***b*, respectively, through the connection hole **8**. Moreover, the semiconductor region **4N***b* of the nMOS **4N** is electrically connected with the semiconductor region **4P***b* of the pMOS **4P** through a first-layer wiring line **10** connecting the electrodes **9N***b* and **9P***b*.

On the other hand, the semiconductor regions **5S***a* and **5S***b* for the substrate potential are electrically connected with electrodes **9S***a* and **9S***b*, respectively, through the connection holes **8**.

Those electrodes **9N***a*, **9N***b*, **9P***a*, **9P***b*, **9S***a* and **9S***b* and first-layer wiring line **10** are made of an alloy of aluminum (Al)—Si—Copper (Cu), for example.

On the insulating film **7**, there is deposited a surface protecting film **11** which is formed by laminating a SiO_2 film and a silicon nitride (Si_3N_4) sequentially from the lower layer, for example. The surface protecting film **11** covers the electrodes **9N***a*, **9N***b*, **9P***a* , **9P***b*, **9S***a* and **9S***b* and the first-layer wiring line **10**.

On the other hand, the semiconductor substrate **2** is formed on its back with a gettering layer **2G**. This gettering layer **2G** is a functional layer for trapping a heavy metal element such as iron (Fe), nickel (Ni), Cu or chromium (Cr) and is formed by covering the back of the semiconductor substrate **2** with a semiconductor film of poly-silicon, for example.

With reference to FIGS. **1** to **8**, here will be described a process for manufacturing a semiconductor integrated circuit device according to the present embodiment 1.

First of all, a (not-shown) column-shaped p^--type Si single crystal having a crystal face of <100>azimuth is prepared by the Czochralski method. The impurity to be used is exemplified by a p-type impurity such as boron in a concentration of about 1.3×10^{15} atoms/cm^3.

Subsequently, the column-shaped p^--type Si single crystal cut into slices, and these slices are subjected, if desired, to a chamfering treatment, a surface cleaning treatment such as a chemical etching treatment, and a working strain removing treatment. After this, the slices have their principal surfaces mirror-polished by the chemical-mechanical polishing method or the like to prepare a mirror wafer **2W**, as shown in FIGS. **2** and **3**. Incidentally, the mirror wafer **2W** is the mother material of the aforementioned semiconductor substrate body **2S**.

Next, the poly-silicon is deposited on the back of the mirror wafer **2W**, as shown in FIG. **4**, by the CVD (i.e.,

Chemical Vapor Deposition) method to form the gettering layer **2**G. This gettering layer **2**G is a functional layer for trapping a heavy metal element.

Subsequently, the epitaxial layer **2**E, which is made of a p^--type Si single crystal as thin as about 1 μm, is formed over the principal surface (as located at the mirror surface side) of the mirror wafer **2**W by the CVD method (e.g., the epitaxial growth method) of about 980° C., for example, by using monosilane (SiH_4) gas and hydrogen (H_2) gas, thereby to manufacture an epitaxial wafer (or semiconductor wafer) **2**WE.

At this time, the impurity concentration in the epitaxial layer **2**E is set equal to the designed one of the mirror wafer **2**W. The epitaxial layer **2**E is doped with a p-type impurity such as boron in a concentration of about 1.3×10^{15} atoms/cm^3.

After this, the not-shown ion implantation mask is formed over the epitaxial wafer **2**WE and is then used to dope a predetermined position of the epitaxial wafer **2**WE, as shown in FIG. **5**, with an n-type impurity such as phosphor or arsenic by the ion implantation method. After this, the epitaxial wafer **2**WE is subjected to a heat treatment to form the n-well **6**.

An ion implantation impurity concentration (dose) for forming that n-well **6** is at about 1×10^{13} atoms/cm^2 and is as deep as about 1.5 to 4 μm and deeper than the epitaxial layer **2**E.

Next, as shown in FIG. **6**, the field insulating film **3** made of SiO_2 or the like is formed over the principal surface of the epitaxial layer **2**E by the LOCOS method or the like. After this, the element forming region, as enclosed by the field insulating film **3**, is simultaneously formed with the gate. insulating films **4**N*c* and **4**P*c* made of SiO_2 or the like having a thickness of about 180 angstroms by the thermal oxidation method or the like.

In the present embodiment 1, the gate insulating films **4**N*c* and **4**P*c* can be formed to have an excellent film quality by forming them over the epitaxial layer **2**E so that their breakdown voltages can be improved. Moreover, the gate insulating films **4**N*c* and **4**P*c* can have their defect densities improved by one figure or more.

Subsequently, as shown in FIG. **7**, the gate insulating films **4**N*d* and **4**P*d* of poly-silicon having a low resistance are simultaneously formed over the gate insulating films **4**N*c* and **4**P*c*. After this, the gate insulating films **4**N*d* and **4**P*d* are used as masks to form the paired gate insulating films **4**N*a* and **4**N*b* and the paired gate insulating films **4**P*a* and **4**P*b* by different ion implantation steps, to form the nMOS **4***n* and pMOS **4**P over the epitaxial wafer **2**WE.

After this, the semiconductor regions **5**S*a* and **5**S*b* are separately formed in predetermined positions of the epitaxial layer **2**E. After this, as shown in FIG. **8**, the insulating film **7** made of SiO_2, for example, is deposited over the epitaxial wafer **2**WE by the CVD method or the like.

Next, the insulating film **7** is formed with the connection holes **8** to expose the semiconductor regions **4**N*a* and **4**N*b* of the nMOS **4**N, the semiconductor regions **4**P*a* and **4**P*b* of the pMOS **4**P and the semiconductor regions **5**SA and **5**S*b* for the substrate potential to the outside. After this, a conductor film **9** made of the Al—Si—Cu alloy, for example, is deposited over the epitaxial wafer **2**WE by the sputtering method or the evaporation method.

Subsequently, the conductor film **9** is patterned by the dry etching method or the like to simultaneously form the electrodes **9**N*a*, **9**N*b*, **9**P*a*, **9**P*b*, **9**S*a* and **9**S*b* and the first wiring line **10**, as shown in FIG. **1**.

After this, the surface protecting film **11** is formed over the epitaxial wafer **2**WE by sequentially depositing the insulating film of SiO_2 and the insulating film of Si_3N_4, for example, by the CVD method or the like. After this, the epitaxial wafer **2**WE is divided into individual semiconductor chips to manufacture the semiconductor integrated circuit device **1**, as shown in FIG. **1**.

Thus, according to the present embodiment 1, the following effects can be achieved.

(1) Since the gate insulating film **4**N*c* of the nMOS **4**N and the gate insulating film **4**P*c* of the pMOS **4**P are formed over the epitaxial layer **2**E (or the semiconductor single crystal layer), the gate insulating films **4**N*c* and **4**P*c* having the excellent film quality can be formed to improve their breakdown voltages.

(2) Thanks to the aforementioned effect (1), it is possible to drastically reduce the defect densities of the gate insulating films **4**N*c* and **4**P*c*.

(3) Since the p^--type epitaxial layer **2**E is formed over the p^--type semiconductor substrate body **2**S so That any expensive heavily doped p^--type semiconductor substrate body is not used, the cost for the semiconductor substrate **2** (i.e., the epitaxial wafer **2**WE) can be reduced to as low as one half.

(4) Since the epitaxial layer **2**E is made relatively thin, the control of setting of the thickness of the epitaxial layer **2**E is easily accomplished so that the deposition apparatus for forming the epitaxial layer is neither required to have a precise control of deposition nor expensive. As a result, it is possible to lower the cost for the semiconductor substrate **2** (i.e., the epitaxial wafer **2**WE).

(5) Thanks to the aforementioned effects (3) and (4), it is possible to lower the cost for the semiconductor integrated circuit device.

(6) Since the epitaxial layer **2**E is made relatively thin, its upper surface can have its flatness retained.

(7) Thanks to the aforementioned effects (1), (2) and (6), it is possible to improve the performance, reliability and production yield of the semiconductor integrated circuit device.

(Embodiment 2)

FIG. **9** is a section showing an essential portion of a semiconductor integrated circuit device according to another embodiment of the present invention, and FIGS. **10** and **11** are sections showing an essential portion at steps of manufacturing the semiconductor integrated circuit device of FIG. **9**.

The present embodiment 2 is different from the embodiment 1 in that the semiconductor substrate body **2**S is formed over its principal surface with a non-defective layer **2**A, which is formed thereover with the epitaxial layer **2**E.

The non-defective layer **2**A is in the state having substantially neither any structural defect (e.g., the stacking fault or the dislocation loop) nor any precipitation of oxygen, of which the former is substantially zero whereas the latter is at about 0.1 cm^{-2}, when observed by the light scattering method. For example, the non-defective layer **2**A is made of a p^--type Si single crystal which have an impurity content and a concentration equal to those of the semiconductor substrate body **2**S.

With reference to FIGS. **9** to **11**, here will be described the process for manufacturing the semiconductor integrated circuit device **1** of the present embodiment 2.

First of all, as shown in FIG. **10**, the mirror wafer **2**W is prepared as in the foregoing embodiment 1. After this, the mirror wafer **2**W is heated at a temperature (e.g., at about 1,100° C. to 1,200° C. for 10 to 60 minutes) in the H_2 gas

atmosphere, for example, to form the non-defective layer **2A** over the principal surface of the mirror wafer **2W**.

Subsequently, as shown in FIG. **11**, poly-silicon, for example, is deposited on the back of the mirror wafer **2W** by the CVD method or the like to form the gettering layer **2G**. This gettering layer **2G** is a functional layer for trapping a heavy metal element.

After this, the epitaxial layer **2E** made of a p^--type Si single crystal having a relatively small thickness of about 1 μm, for example, is formed over the non-defective layer **2A** by the CVD method (e.g., the epitaxial growth method) using SiH_4 gas and H_2 gas, for example. At this time, the impurity and its concentration in the epitaxial layer **2E** are similar to those of the foregoing embodiment 1. Moreover, the subsequent steps are similar to those of the aforementioned embodiment 1, and their description will be omitted.

Thus, according to the present embodiment 2, the following effects can be achieved in addition to those obtained in the foregoing embodiment 1.

Specifically, since the non-detective layer **2A** is formed over the principal surface of the mirror wafer **2W** prior to the formation of the epitaxial layer **2E**, the epitaxial layer **2E** can be improved in its crystal growth to reduce the defects and dislocations drastically. As a result, it is possible to further improve the production yield, performance and reliability of the semiconductor integrated circuit device.

(Embodiment 3)

FIG. **12** is a section showing an essential portion of a semiconductor integrated circuit device according to another embodiment of the present invention, and FIGS. **13** to **15** are sections showing an essential portion in the steps of manufacturing the semiconductor integrated circuit device of FIG. **12**.

In the present embodiment 3, as will be described later in connection with the forming method with reference to FIG. **13**, a p^+-type semiconductor region (i.e., a heavily doped semiconductor region) **2B** is formed in a predetermined depth (of about 1 μm) of the entire principal surface of the semiconductor substrate body **2S**. The p^+-type semiconductor region **2B** is doped with a p-type impurity such as boron in a higher concentration of about 1×10^{18} atoms/cm^3 than that of the epitaxial layer **2E** or the semiconductor substrate body **2S**.

The p^+-type semiconductor region **2B** is a functional layer for suppressing the latchup of the CMOS circuit. Specifically, in the present embodiment 3, the p^+-type semiconductor region **2B** is formed so that the resistance of the surface layer side of the substrate can be drastically lowered to improve the resistance of the CMOS circuit to the latchup.

Moreover, the epitaxial layer **2E** is thicker at about 5 μm than those of the foregoing embodiments 1 and 2. The lower limit of the thickness of the epitaxial layer **2E** is set to a deeper value than that of the n-well **6** in the pMOS forming region.

This is because the p^+-type semiconductor region **2B** is formed in the n-well **6** to make it difficult to set the impurity concentration in the n-well **6** if the thickness of the epitaxial layer **2E** is made smaller than the depth of the n-well **6**. On the other hand, the upper limit of the thickness of the epitaxial layer **2E** may desirably be less than 5 μm. This is reasoned as in the foregoing embodiment 1. However, the thickness may exceed that value so long as an increase in the cost is allowed.

With reference to FIGS. **13** to **15**, here will be described the process for manufacturing such semiconductor integrated circuit device **1**.

First of all, as shown in FIG. **13**, the mirror wafer **2W** is prepared as in the foregoing embodiment 1. After this, the mirror wafer **2W** (or the semiconductor substrate body **2S**) is highly accurately doped with a p-type impurity such as boron to a predetermined depth (e.g., about 1 μm) from its principal surface. The impurity concentration at this time is about 1×10^{18} atoms/cm^3.

Subsequently, the mirror wafer **2W** is thermally treated to form the p^+-type semiconductor region **2B**. After this, a poly-silicon, for example, is deposited on the back of the mirror wafer **2W** by the CVD method or the like to form the gettering layer **2G**. This gettering layer **2G** is a functional layer for trapping a heavy metal element.

After this, the epitaxial layer **2E** (or the semiconductor single crystal layer) made of a p^--type Si single crystal having a thickness of about 5 μm, for example, is formed over the principal surface (as located at the mirror surface side) of the mirror wafer **2W**, as shown in FIG. **14**, by the CVD method (i.e., the epitaxial growth method) using SiH_4 and H_2 gas, for example, to form the epitaxial wafer **2WE**.

At this time, the impurity concentration in the epitaxial layer **2E** is set to be equal to the designed one of the mirror wafer **2W**. The epitaxial layer **2E** is doped with a p-type impurity such as boron, for example, in a concentration of about 1.5×10^{15} atoms/cm^3.

After this, the not-shown ion implantation mask is formed over the epitaxial wafer **2WE** and is then used as a mask to dope a predetermined position of the epitaxial wafer **2WE**, as shown in FIG. **15**, with an n-type impurity such as phosphor or arsenic by the ion implantation method. After this, the epitaxial wafer **2WE** is subjected to a heat treatment to form the n-well **6**.

In the present embodiment 3, the n-well **6** has a depth of about 3 μm and is formed in the epitaxial layer **2E**. The ion implantation impurity concentration (dose) for forming that n-well **6** is at about 1×10^{13} atoms/cm^2. The subsequent steps are similar to those of the aforementioned present embodiment 1 so that their description will be omitted.

Thus, in the present embodiment 3, the following effects can be achieved in addition to those of the aforementioned embodiment 1.

Specifically, since the p^+-type semiconductor region **2B** is formed in the p^--type semiconductor substrate body **2S**, the resistance at the side of the substrate surface can be drastically lowered to improve the resistance of the CMOS circuit to the latchup. As a result, it is possible to further improve the performance, reliability and production yield of the semiconductor integrated circuit device.

(Embodiment 4)

FIG. **16** is a section showing an essential portion of a semiconductor integrated circuit device according to another embodiment of the present invention; FIG. **17** is an impurity distribution diagram in the semiconductor integrated circuit device of FIG. **16**; FIGS. **18** and **19** are impurity distribution diagrams in the semiconductor integrated circuit device having been described in the prior art; FIGS. **20** to **24** are sections showing an essential portion in the steps of manufacturing the semiconductor integrated circuit device; and FIG. **25** is a graph for explaining the effects of the semiconductor integrated circuit device of the present embodiment. Incidentally, the portions identical to those of the foregoing embodiment 1 are designated at the common reference characters.

As shown in FIG. **16**, the relatively lightly doped semiconductor substrate body **2S** of the semiconductor integrated circuit device **1** of the present embodiment 4 is made of a p-type Si single crystal or the like, for example. The semiconductor substrate body **2S** is doped with a p-type impurity such as boron in a concentration of about 1.5×10^{15} atoms/cm^3.

The epitaxial layer **2**E made of a p^--type Si single crystal or the like is formed over a principal surface of the semiconductor substrate body **2**S. The epitaxial layer **2**E is doped with a p-type impurity such as boron in a concentration lower than the designed one of the semiconductor substrate body **2**S.

Thus, in the present embodiment 4, the p^--type epitaxial layer **2**E is formed over the p-type semiconductor substrate body **2**S as in the foregoing embodiment 1 so that the expensive p^+-type semiconductor substrate body need not be used and then the cost for the semiconductor substrate **2** is lowered to about one half.

Since, moreover, the impurity concentration of the semiconductor substrate body **2**S is made higher than that of the epitaxial layer **2**E, the resistance of the semiconductor substrate body **2**S can be made lower than that of the epitaxial layer **2**E to improve the resistance to the latchup.

As will be later shown in FIG. **17**, the epitaxial layer **2**E has a thickness W_E (from the surface of the epitaxial layer **2**E) similar to that of the foregoing embodiment 1, as exemplified by about 1 μm. As a result, it is possible to achieve the same effects as those described in connection with the foregoing embodiment 1. The upper and lower limits of the thickness of the epitaxial layer **2**E are similar to those of the foregoing embodiment 1.

The semiconductor substrate **2** is formed in its upper portion with a p-well (i.e., the first semiconductor region) **6***p* and an n-well (i.e., the first semiconductor region) **6***n*. The p-well **6***p* is doped with a p-type impurity such as boron. The p-well **6***p* is formed with the nMOS **4**N. On the other hand, the n-well **6***n* is doped with an n-type impurity such as phosphor. The n-well **6***n* is formed with the pMOS **4**P. As will be later shown in FIG. **17**, the depth W_W (i.e., the depth from the surface of the epitaxial layer **2**E) of the n-well **6***n* and the p-well **6***p* is larger than the thickness W_E of the epitaxial layer **2**E.

Incidentally, the CMOS circuit is constructed of the nMOS **4**N and the pMOS **4**P, which have their structures, materials and effects similar to those of the foregoing embodiment 1. On the other hand, the structures of the NMOS **4**N and the PMOS **4**P may be changed to the double drain (or double diffused drain) structure and the LDD (i.e., Lightly Doped Drain) structure.

On the insulating film **7**, there is deposited an insulating film **7***a* of SiO_2, for example, on which is deposited a flattening insulating film **7***b*. The insulating films **7**, **7***a* and **7***b* are formed with connection holes **8**a extending to reach the electrodes **9**N*b* and **9**P*b*, through which a second-layer wiring line **10***a* is electrically connected with the electrodes **9**N*a* and **9**P*a*.

The second-layer wiring line **10***a* is formed by depositing a barrier layer **10***a***1** of titanium nitride (TiN), a conductor layer **10***a***2** of an Al—Si—Cu alloy and a barrier layer **10***a***3** of titanium nitride sequentially from the lower layer.

An insulating film **7***c* of SiO_2, for example, is deposited on the insulating film **7***b* to cover the second-layer wiring line **10***a*. On the insulating film **7***c*, there is deposited the surface protecting film **11**. This surface protecting film **11** is formed by depositing an insulating film **11***a* of SiO_2 and an insulating film **11***b* of Si_3N_4, for example, sequentially from the lower layer.

Incidentally, in the present embodiment 4, the aforementioned p-well **6***p* and n-well **6***n* are formed to extend from the surface of the epitaxial layer **2**E to the upper portion of the semiconductor substrate body **2**S, as shown in FIGS. **16** and **17**, and the p-well **6***p* and n-well **6***n* have their impurity concentrations gradually lowered in the depthwise direction from the principal surface (having an impurity concentration N_W) of the epitaxial layer **2**E. Thus, the impurity concentration of the p-well **6***p* is given such a gradient that it is gradually lowered in the depthwise direction from the surface of the epitaxial layer **2**E, so that the influence to be caused by the carriers (or electrons) due to the α-ray is lowered. Specifically, the electrons produced by the α-ray are attracted to the substrate body **2**S by that concentration gradient and prevented from entering the p-well **6***p* so that the soft errors can be reduced in case the MIS memory of the DRAM or the like is formed in the p-well **6***p*. The impurity concentration N_W in the principal surface of the epitaxial layer **2**E of the p-well **6***p* and the n-well **6***n* is at about 6×10^{16} atoms/cm^3, so that the impurity concentration of the p-well **6***p* and the n-well **6***n* is at 5×10^{15} to 6×10^{16} atoms/cm^3.

In FIG. **17**, letter A plots the impurity concentration distributions of the epitaxial layer **2**E and semiconductor substrate body **2**S in the epitaxial wafer state, and indicates that the impurity concentration (N_E) of the epitaxial layer **2**E is lower than that (N_S) of the semiconductor substrate body **2**S, as described above. Thus, the p-well **6***p* is formed after the p^-- type epitaxial layer **2**E is formed over the p-type semiconductor substrate body **2**S, the well concentration (i.e., the concentration N_W of the well surface) of the p-well **6***p* is not influenced by the p-type impurity concentration of the semiconductor substrate body **2**S. Specifically, since the p^--type epitaxial layer **2**E is formed over the semiconductor substrate body **2**S, the well concentration N_W of the p-well **6***p* is not influenced by the dispersion of the p-type impurity concentration of the semiconductor substrate body **2**S so that the fluctuation of the Vth of the MIS.FET is not caused by that dispersion. As a result, the allowable concentration range can be widened more than the prior art with respect to the dispersion of the p-type impurity concentration of the semiconductor substrate body **2**S so that the cost for the semiconductor integrated circuit device can be lowered. In other words, in the prior art, only a narrow range can be used as the p-type impurity concentration of the semiconductor substrate body **2**S to raise the cost for the semiconductor integrated circuit device.

For comparisons, the impurity concentration distributions of the aforementioned two cases of the prior art are plotted in FIGS. **18** and **19**. Incidentally, FIG. **18** corresponds to the case of the aforementioned technique, as described on pp. 761 to 763 of "Applied Physics, Vol. 60, No. 8", issued on Aug. 10, 1991, by Japanese Association of Applied Physics, and FIG. **19** corresponds to the case of the aforementioned technique, as described in the Japanese Patent Laid-Open No. 260832/1989.

In the technique shown in FIG. **18**, the impurity concentration NS_1 of the semiconductor substrate body SB**1** is higher than that of the epitaxial layer EP**1**. Moreover, the well WLL**1** is formed in the epitaxial layer from the standpoint of setting the impurity concentration. This makes it necessary to make the epitaxial layer deeper, as at Wep**1**, than the well WLL**1**. In short, the thickness Wep**1** of the epitaxial layer has to be larger than the depth of the well WLL**1**. Moreover, the well WLL**1** of this case is formed by implanting the epitaxial layer EP**1** with the impurity from the surface thereof, so that the impurity concentration is higher in the substrate surface than in the inside.

In the technique shown in FIG. **19**, the impurity concentrations of both the semiconductor substrate body SB**2** and the editaxial layer EP**2** are set to be low, as at NS_2. The diffusion layer WLL**2** is formed to extend deeper, as at W_{W2}, than the depth Wep**2** of the epitaxial layer EP**2**. The diffusion layer WLL**2** of this case is formed by the diffusion (i.e., the

diffusion of the impurity of the semiconductor substrate body SB2 from the semiconductor substrate body to the epitaxial layer EP2) at the time when the epitaxial layer EP2 is formed over the semiconductor substrate body SB2 which has been doped in its upper portion with a diffusion layer forming impurity. As a result, the impurity concentration is low, as at NS_3, in the substrate surface but high, as at NS_4, in the boundary region between the epitaxial layer EP2 and the semiconductor substrate body SB2 and gets lower internally of the semiconductor substrate body.

With reference to FIGS. **20** to **24**, here will be described the process for manufacturing the semiconductor integrated circuit device of the present embodiment 4.

First of all, as shown in FIG. **20**, the mirror wafer **2**W or the mother material of the semiconductor substrate body **2**S made of a p-type Si single crystal is formed over its mirror surface with the epitaxial layer **2**E, which is made of an Si single crystal having the same conduction type as the mirror wafer **2**W and containing an impurity of a lower concentration than that of the mirror wafer **2**W, by the CVD method using SiH_4 gas and H_2 gas similar to those of the foregoing embodiment 1.

Here, the mirror wafer **2**W has an impurity concentration of about 1.5×10^{15} atoms/cm^3. Moreover, the epitaxial layer **2**E has a thickness W_E of about 1 μm, for example.

Subsequently, the mirror wafer **2**W is formed in its predetermined region with an insulating film **12***a* made of SiO_2 having a thickness of about 40 nm. After this, a (not-shown) insulating film made of Si_3N_4 having a thickness of about 50 nm, for example, is deposited on a predetermined region of the mirror wafer **2**W by the CVD method or the like.

After this, the film portion in the n-well forming region is removed from the insulating film of Si_3N_4 by the dry etching method or the like. After this, the film portion and the resist film of the p-well forming region in the insulating film of Si_3N_4 is used as a mask to dope the exposed portion of the epitaxial layer **2**E with the ions of an n-type impurity such as phosphor for forming the n-well. The ion implanting energy at this time is at about 125 KeV, and the dose is about 2×10^{13} atoms/cm^2.

After this, the film portion, as in the p-well forming region, of the insulating film of Si_3N_4 is used as a mask to form an insulating film **12***b* having a thickness of about 120 nm over the epitaxial layer **2**E at the n-well side. After this, the insulating film over the n-well forming region is used as an ion implantation mask to dope the exposed portion of the epitaxial layer **2**E with a p-type impurity such as boron for forming the p-well, for example. The ion implantation energy at this time is about 60 KeV, and the dose is;about 8×10^{12} atoms/cm^2, for example.

Next, the mirror wafer **2**W is subjected to an annealing treatment for extended diffusion for 3 hours, for example, to form the p-well **6***p* and the n-well **6***n* having a depth of about 3 μm, or example. The treatment temperature at this time is about 1,200° C., for example.

In the present embodiment 4, at this annealing treatment, the p-well **6***p* and the n-well **6***n* are extended from the surface of the epitaxial layer **2**E to the upper portion of the mirror wafer **2**W and made to have their impurity concentrations gradually lowered depthwise from the surface of the epitaxial layer **2**E. The impurity concentration of the p-well **6***p* and the n-well **6***n* is at 5×10^{15} to 6×10^{16} atoms/cm^3.

Subsequently, as shown in FIG. **22**, a pad oxide film **12***c* and the (not-shown) non-oxidizable insulating film of Si_3N_4 are deposited sequentially from the lower layer. After this, the non-oxidizable insulating film is removed from the element separating region but left at the element forming region.

After this, the non-oxidizable insulating film left unremoved is used as a mask to form the field insulating film **3** selectively in the element separating region. After this, as shown in FIG. **23**, the element forming region, as enclosed by the field insulating film **3**, is formed by the thermal oxidation method with the gate insulating films **4**N*c* and **4**P*c* made of SiO_2 having a thickness of about 180 angstroms, for example.

Thus in the present embodiment 4, too, the gate insulating films **4**N*c* and **4**P*c* are given an excellent film quality by forming them over the epitaxial layer **2**E so that their breakdown voltages can be improved. Moreover, the gate insulating films **4**N*c* and **4**P*c* can have their defect densities improved by one figure or more.

Subsequently, the gate insulating films **4**N*c* and **4**P*c* are simultaneously formed thereover with the gate electrodes **4**N*d* and **4**P*d* made of an n-type poly-silicon of low resistance, for example. After this, these gate electrodes **4**N*d* and P*d* are used as masks to form the paired semiconductor regions **4**N*a* and **4**N*b* and the paired semiconductor regions **4**P*a* and **4**P*b* by the separate ion implantation steps thereby to form the nMOS **4**N and pMOS **4**P over the epitaxial wafer **2**WE.

Here, the gate electrodes **4**N*d* and **4**P*d* should not be limited to those made of elemental poly-silicon but can be modified in various manners. For example, the gate electrodes **4**N*d* and **4**P*d* may be given the so-called "poly-cide structure", in which a refractory metal silicide film is deposited on poly-silicon of low resistance.

Moreover, the semiconductor region **4**N*a* of the NMOS **4**N is formed by doping it with ions of as in a dose of about 1×10^{15} atoms/cm^2, for example. On the other hand, the semiconductor region **4**P*a* of the pMOS **4**P is formed by doping it with ions of BF_2 in a dose of about 1×10^{15} atoms/cm^2, for example.

Incidentally, the semiconductor regions **4**N*a*, **4**N*b*, **4**P*a* and **4**P*b* may be exemplified by the double diffused drain structure or the LDD structure, as described above.

After this, as shown in FIG. **24**, the insulating film **7** of SiO_2 is deposited on the epitaxial wafer **2**WE by the CVD method or the like. This insulating film **7** is mainly composed of the BPSG (i.e., Boro Phospho Silicate Glass) containing B_2O_3 and P_2O_5.

Next, the insulating film **7** is formed with the connection holes **8** for exposing the semiconductor regions **4**N*a* and **4**N*b* of the nMOS **4**N and the semiconductor regions **4**P*a* and **4**P*b* of the pMOS **4**P to the outside. After this, the conductor film **9** of the Al—Si—Cu alloy, for example, is deposited on the epitaxial wafer **2**WE by the sputtering method or the evaporation method.

Subsequently, the conductor film **9** is patterned by the dry etching method or the like to form the electrodes **9**N*a*, **9**N*b*, **9**P*a*, **9**P*b*, **9**S*a* and **9**S*b*. After this, the insulating film **7***a* of SiO_2, for example, is deposited on the epitaxial wafer **2**WE by the CVD method of the like. After this, the flattening insulating film **7***b* of SiO_2 is deposited on the insulating film **7***a* by the CVD method or the like.

Next, the flattening insulating film **7***b* is flattened by the CMP (i.e., Chemical Mechanical Polishing) method or the like. After this, the insulating films **7**, **7***a* and **7***b* are formed with the connection holes **8***a* by the dry etching method, as shown in FIG. **16**.

Subsequently, the barrier layer **10***a***1** of TiN, the conductor layer **10***a***2** of the Al—Si—Cu alloy and the barrier layer **10***a***3** of TiN, for example, are deposited on the epitaxial wafer **2**WE sequentially from the lower layer by the sputtering method or the evaporation method.

Subsequently, those barrier layers **10***a***1** and **10***a***3** and conductor layer **10***a***2** are patterned by the dry etching method or the like to form the second-layer wiring line **10***a*. After this, the insulating film **7***c* of SiO_2, for example, is deposited on the epitaxial wafer **2**WE by the CVD method or the like.

After this, the insulating film **11***a* of SiO_2 is deposited on the insulating film **7***c* by the CVD method or the like. The insulating film **11***b* of Si_3N_4 is then deposited on the insulating film **11***a* by the CVD method or the like to from the surface protecting film **11**.

After this, the individual semiconductor chips are divided from the epitaxial wafer **2**WE to manufacture the semiconductor integrated circuit device **1**, as shown in FIG. **16**.

Here, in case the structure of the present embodiment 4 is applied to a 4M.DRAM (i.e., 4 Megabit Dynamic RAM), the results of the performances (e.g., the gate breakdown voltage) of the gate insulating film are plotted in FIG. **25**.

FIG. **25** plots the performances of the gate insulating film in case the MOS capacitor to have its gate breakdown voltage evaluated is prepared after the process for manufacturing the 4M.DRAM is executed to the step of forming the gate insulating film.

It is assumed here that: the gate insulating film has a thickness of about 18 nm; the gate electrode has an area of about 4.8 mm^2; and the gate electrode is made of phosphor-doped poly-silicon.

The abscissa indicates the thickness W_E of the epitaxial layer. On the other hand, the ordinate indicates the defect density which is calculated from the following equation by measuring the breakdown characteristics of about two hundreds of MOS capacitors on the semiconductor wafer (or the epitaxial wafer) and then by deciding the non-defective and defective produces according to the following standards. However, the densities are generally indicated in relative values with reference to the mirror wafer for the MOS.LSI having no epitaxial layer.

Standards for Deciding Products Non-Defective in Breakdown Voltage: Electric Field>10 MV/cm. Here, the electric current is at about 1 mA. For a gate defect density D, the number P of the capacitors measured, and the number N of the defective capacitors, D=(100/4.8)1n((P−N)/P).

Thanks to the structure of the present embodiment 4, as seen from FIG. **25**, it can be confirmed that the defect density can be reduced more by one figure or more than the case, in which the gate insulating film is formed over the mirror wafer, to provide an excellent gate breakdown performance.

As has been described hereinbefore, according to the present embodiment 4, the following effects can be achieved in addition to those of the foregoing embodiment 1.

(1) For manufacturing the semiconductor integrated circuit device, there can be used absolutely the same process as that of the case in which the CMOS circuit is to be formed over the mirror wafer. As a result, the semiconductor integrated circuit device having the CMOS circuit over the epitaxial wafer **2**WE can be formed without any change in the design or in the manufacture process.

(2) Since the impurity concentration of the epitaxial layer **2**E is made lower than that of the semiconductor substrate body **2**S, the resistance of the semiconductor substrate body **2**S can be made lower than that of the epitaxial layer **2**E to improve the resistance to the latchup.

(Embodiment 5)

FIG. **26**(A) is a section showing an essential portion of a semiconductor integrated circuit device according to another embodiment of the present invention.

The semiconductor integrated circuit device **1** of the present embodiment 5, as shown in FIG. **26**(A), is exemplified by a 16M.DRAM. FIG. **26**(B) is a circuit diagram showing a memory cell of the DRAM. In FIG. **26**(A), the lefthand side shows a memory cell region, and the righthand side shows a peripheral circuit region. Incidentally, this peripheral circuit region has the same structure as that of the foregoing embodiment 4, and its description will be omitted.

In the present embodiment 5, too, the impurity concentration of the epitaxial layer **2**E is made lower than that of the semiconductor substrate body **2**S, as in the foregoing embodiment 4.

As shown in FIGS. **26**(A) and **26**(B), one memory cell MC is constructed by one transfer MOS.FET **13** and one capacitor **14**.

The transfer MOS.FET **13** is composed of a pair of semiconductor regions **13***a* and **13***b* formed in a p-well **6***p***1**, a gate insulating film **13***c* formed over the epitaxial layer **2**E, and a gate electrode **13***d* formed over the gate insulating film **13***c*.

Here in the memory cell region, too, the p-well **6***p***1** is formed to extend from the surface of the epitaxial layer **2**E to the upper portion of the semiconductor substrate body **2**S, as located deeper than the epitaxial layer **2**E. Moreover, the impurity concentration of the p-well **6***p***1** is made gradually lower, as in the foregoing embodiment 4, depthwise of the semiconductor substrate **2**.

The paired semiconductor regions **13***a* and **13***b* are doped with an n-type impurity such as As. In the present embodiment 5, these semiconductor regions **13***a* and **13***b* are formed in the epitaxial layer **2**E having less defects due to the precipitation of oxygen, so that the junction leakage current can be reduced to improve the performance, reliability and production yield of the DRAM.

With one semiconductor region **13***a*, there is electrically connected a bit line (BL) **15**. This bit line **15** is composed, for example, of a conductor layer **15***a* made of polycrystalline silicon of low resistance and a conductor layer **15***b* formed over the former and made of tungsten silicide or the like.

With the other semiconductor region **13***b*, on the other hand, there is electrically connected a lower electrode **14***a* of the capacitor **14**. In the present embodiment 5, the semiconductor region **13***b* is formed in the epitaxial layer **2**E having less defects due to the precipitation of oxygen, so that the leakage of the charge accumulated in the capacitor **14** can be suppressed to elongate the charge storage time period thereby to improve the refresh characteristics.

The capacitor **14** is formed into a fin shape and constructed of the lower electrode **14***a*, an upper electrode **14***b*, and a (not-shown) insulating film interposed between those electrodes. However, the shape of the capacitor should not be limited to the fin but can be modified in various manners such as a cylindrical shape.

Incidentally, the gate electrode **13***d* of the transfer MOS-.FET **13** also acts as the word line (WL). Moreover, reference numerals **16***a* and **16***b* appearing in FIG. **26**(A) designate channel stopper regions.

Thus in the present embodiment 5, the following effects can be achieved in addition to those of the foregoing embodiment 1.

Specifically, since the semiconductor region **13***b* to be electrically connected with the lower electrode **14***a* of the capacitor **14** is formed in the epitaxial layer **2**E, the leakage of the charge accumulated in the capacitor **14** can be suppressed to elongate the charge storage time period thereby to improve the refresh level. As a result, it is possible to improve the performance, reliability and production yield of the DRAM.

(Embodiment 6)

FIG. **27**(A) is a section showing an essential portion of a semiconductor integrated circuit device according to another embodiment of the present invention.

The semiconductor integrated circuit device **1** of the present embodiment **6**, as shown in FIG. **27**(A), is exemplified by a 4M.SRAM (i.e., 4 Megabit Static RAM). In the present embodiment 6, too, the impurity concentration of the epitaxial layer **2**E is made lower than that of the semiconductor substrate body **2**S, as in the foregoing embodiment 4. FIG. **27**(B) is a circuit diagram showing a memory cell of the SRAM.

In the present embodiment 6, as shown in FIGS. **27**(A) and **27**(B), in the semiconductor substrate **2**, the memory cell region is formed with a p-well **6***p***2**, and the peripheral circuit region is formed with an n-well **6***n***1**.

These p-well **6***p***2** and n-well **6***n***1** are formed, as in the foregoing embodiments 4 and 5, to extend from the surface of the epitaxial layer **2**E to the upper portion of the semiconductor substrate body **2**S. Moreover, their impurity concentrations are made gradually lower depthwise of the semiconductor substrate **2** as in the foregoing embodiment 4.

The memory cell region is formed with a transfer MOS-.FET **17**, a drive MOS.FET **18** and a load MOS.FET **19**.

The transfer MOS.FET **17** is composed of: a pair of semiconductor regions **17***a* and **17***b* formed in the upper portion of the p-well **6***p***2**; a gate insulating film **17***c* formed over the epitaxial layer **2**E; and a gate electrode **17***d* formed over the gate insulating film **17***c*.

These semiconductor regions **17***a* and **17***b* are doped with an n-type impurity such as As. One semiconductor region **17***a* is electrically connected through the first-layer wiring line **10** with the bit line **15** (BL and $\overline{BL}$). The other semiconductor region **17***b* is electrically connected with a gate electrode **18***d* of the drive MOS.FET **18**.

Incidentally, the transfer MOS.FET **17** and the drive MOS.FET **18** have their gate electrodes **17***d* and **18***d* formed by depositing a refractory metal silicide on the conductor film made of poly-silicon of low resistance, and the transfer MOS.FET **17** has its gate electrode **17***d* connected with the word line WL.

Moreover, the gate insulating films **17***c* and **18***c* are made of SiO_2, for example. Still moreover, the paired semiconductor regions of the drive MOS.FET **18** are positioned in the direction of the channel length of the gate electrode **18***d*, although not shown.

The load MOS.FET **19** is composed of a gate electrode **19***a* made of poly-silicon of low resistance, and a pair of semiconductor regions **19***c* and **19***d* formed over the gate electrode **19***a* through a gate insulating film **19***b* and made of poly-silicon of low resistance. The semiconductor regions **19***c* and **19***d* are doped with an n-type impurity such as As.

The peripheral circuit region is formed with the PMOS **4**P, for example. This pMOS **4**P is composed of: the paired semiconductor regions **4**P*a* and **4**P*b* formed in the upper portion of the n-well **6***n***1**; the gate insulating film **4**P*c* formed over the epitaxial layer **2**E; and the gate electrode **4**P*d* formed over the gate insulating film **4**P*c*. These semiconductor region **4**P*a* and **4**P*b* are doped with a p-type impurity such as boron.

In the present embodiment 6, the following effects can be achieved in addition to those of the foregoing embodiment 1.

Specifically, according to the structure of the present embodiment 6, the memory cell (MC) of the SRAM is formed over the epitaxial layer **2**E having less defects due to the precipitation of oxygen so that the junction leakage current can be reduced in the paired semiconductor regions **17***a* and **17***b* of the transfer MOS.FET **17** and the (not-shown) paired semiconductor regions of the drive MOS.FET **18**, as composing the memory cell (MC). As a result, the data storage retaining characteristics (e.g., the data retention level) can be improved to reduce the data retention fault percentage. As a result, it is possible to improve the performance, reliability and production yield of the SRAM.

(Embodiment 7)

FIG. **28** is a section showing an essential portion of a semiconductor integrated circuit device according to another embodiment of the present invention.

The semiconductor integrated circuit device **1** of the present embodiment 7, as shown in FIG. **28**, is exemplified by a flash memory (i.e., flash EEPROM (Electrically Erasable Programmable ROM)) capable of electrically erasing/programming data. In the present embodiment 7, too, as in the foregoing embodiment 4, the impurity concentration of the epitaxial layer **2**E is made lower than that of the semiconductor substrate body **2**S.

In the present embodiment 7, too, the semiconductor substrate **2** is formed thereover with a p-well **6***p***3** and an n-well **6***n***2**. The p-well **6***p***3** and n-well **6***n***2** are formed, as in the foregoing embodiments 4 to 6, to extend from the surface of the epitaxial layer **2**E to the upper portion of the semiconductor substrate body **2**S. Moreover, their impurity concentrations are made gradually lower depthwise of the semiconductor region **2**, as in the foregoing embodiment 4.

The memory cell region is formed with a memory cell MC**1**. This memory cell MC**1** is constructed of a single MOS.FET. The memory cell MC**1** is composed of: a pair of semiconductor regions **20***a* and **20***b* formed in the upper portion of the p-well **6***p***3**; a gate insulating film **20***c* formed over the epitaxial layer **2**E; a floating gate electrode **20***d* formed over the gate insulating film **20***c*; a control gate electrode **20***e* formed over the floating gate electrode **20***d* through the (not-shown) insulating film.

One semiconductor region **20***a* is composed of a semiconductor region **20***a***1** and a semiconductor region **20***a***2** formed in the former. The semiconductor region **20***a***1** is doped with an n^--type impurity such as phosphor, and the semiconductor region **20***a***2** is doped with an n^+-type impurity such as As.

Moreover, the other semiconductor region **20***b* is composed of a semiconductor region **20***b***1** and a semiconductor region **20***b***2** formed in the former. The semiconductor region **20***b***1** is doped with a p^+-type impurity such as boron, and the semiconductor region **20***b***2** is doped with an n^+-type impurity such as As.

On the other hand, the peripheral circuit region is formed with the nMOS **4**N and the pMOS **4**P, for example. The NMOS **4**N is composed of: the paired semiconductor regions **4**N*a* and **4**N*b* formed in the upper portion of the p-well **6***p***3**; the gate insulating film **4**N*c* formed over the epitaxial layer **2**E; and the gate electrode **4**N*d* formed over the gate insulating film **4**N*c*. These semiconductor regions **4**N*a* and **4**N*b* are doped with an n-type impurity such as phosphor.

The pMOS **4**P is composed of: the paired semiconductor regions **4**P*a* and **4**P*b* formed in the upper portion of the n-well **6***n***2**; the gate insulating film **4**P*c* formed over the epitaxial layer **2**E; and the gate electrode **4**P*d* formed over the gate insulating film **4**P*c*. These semiconductor regions **4**P*a* and **4**P*b* are doped with a p-type impurity such as boron.

The semiconductor region **4**N*a* of the NMOS **4**N and the semiconductor region **4**P*a* of the PMOS **4**P are electrically

connected through the first-layer wiring line **10** to construct the CMOS circuit.

Thus in the present embodiment 7, the following effects can be achieved in addition to those of the foregoing embodiment 1.

Specifically, in the structure of the present embodiment 7, the memory cell of the flash memory (i.e., EEPROM) is formed over the epitaxial layer **2**E having less defects such as the precipitation of oxygen, so that the breakdown voltage of the gate insulating film **20***c* can be raised to improve the data programming resistance. Moreover, the erasure dispersion at the time of erasing the data can be reduced. As a result, it is possible to improve the performance, reliability and production yield of the flash memory (i.e., EEPROM).

Although our invention has been specifically described in connection with its embodiments, it should not be limited to its foregoing embodiments 1 to 7 but can naturally be modified in various manners without departing the gist thereof.

For example, the foregoing embodiments 1 to 3 have been described in case the gettering layer is made of poly-silicon. However, the present invention should not be limited thereto but can be modified in various manners. For example, the gettering layer may be formed by the method of mechanically forming a working strain on the back of the semiconductor substrate body, the method of properly adjusting or precipitating the oxygen element which is present in the semiconductor substrate body, or the method of doping the semiconductor substrate with carbon ions. Alternatively, the structure may be dispensed with the gettering layer. In the method of properly adjusting or precipitating the oxygen element in the aforementioned semiconductor substrate body, the substrate gettering effect can be enhanced by setting the oxygen concentration to about or more than 9×10^{17} atoms/cm^3. At the same time, the gate insulating film can be formed over the epitaxial layer formed over the semiconductor substrate body and containing no oxygen element, thereby to improve the breakdown characteristics of the gate insulating film. Specifically in the prior art for forming the gate insulating film directly over the principal surface of the semiconductor substrate body, if the oxygen concentration present in the semiconductor substrate body is made as high as 9×10^{17} atoms/cm^3, the oxygen is precipitated in the aforementioned principal surface so that any clean gate insulating film is not formed to deteriorate the breakdown characteristics of the gate insulating film. In the prior art, therefore, the oxygen concentration has to be lowered to make the gettering effect insufficient.

Moreover, the foregoing embodiments 1 to 7 have been described in case the epitaxial layer is formed by the epitaxial growth method using the SiH_4 gas. However, the present invention should not be limited thereto but can be modified in various manners. For example, the epitaxial layer may be formed by the epitaxial growth method using silicon tetrachloride ($SiCl_4$) gas.

Moreover, the foregoing embodiments 1, 2 and 4 to 7 have been described in case the semiconductor substrate body and the epitaxial layer are made of p^--type Si. However, the present invention should not be limited thereto but can be modified such that the semiconductor substrate body and the epitaxial layer are made of n^--type Si. In the foregoing embodiment 3, moreover, the semiconductor substrate body and the epitaxial layer may be made of n^--type Si, and the p^+-type semiconductor region may be made of n^+-type Si.

Moreover, the foregoing embodiment 3 has been described in case the p^+-type semiconductor region for suppressing the latchup is formed all over the semiconductor substrate body. However, the present invention should not be limited thereto but can be modified in various manners. For example, a p^+-type semiconductor region may be formed below the CMOS circuit forming region.

Moreover, the foregoing embodiment 3 has been described in case the p^+-type semiconductor region is formed at a predetermined depth from the principal surface of the semiconductor substrate body. However, the present invention should not be limited thereto but may be modified such that the p^+-type semiconductor region **2**B is formed over the principal surface of the semiconductor substrate body **2**S, as shown in FIG. **29**. Incidentally, FIG. **30** shows the case in which the epitaxial layer **2**E is formed over the semiconductor substrate body **2**S of FIG. **29**.

In the semiconductor integrated circuit device having the structure described in the foregoing embodiment 3, moreover, the non-defective layer of the semiconductor integrated circuit device of the foregoing embodiment 2 may be formed below the epitaxial layer.

Moreover, the techniques having been described in connection with the foregoing embodiments 1 to 3 can also be applied to another semiconductor integrated circuit device such as the semiconductor integrated circuit device which has a semiconductor memory circuit such as the flash memory represented by the DRAM, the SRAM or the ROM (Read Only Memory).

Moreover, the techniques of the foregoing embodiments 1 to 7 can also be applied to the semiconductor integrated circuit device which has a logic circuit such as the so-called "microcomputer".

Moreover, the semiconductor substrate body **2**S having a size as large as 12 inches may be useful.

In the description thus far made, our invention has been described in case it is applied to the semiconductor integrated circuit device having the CMOS circuit having the field of application of its background. However, the present invention should not be limited thereto but can be modified in various manners. For example, the present invention can be applied to another semiconductor integrated circuit device such as the semiconductor integrated circuit device having the bipolar transistors or the semiconductor integrated circuit device having a BiCMOS circuit composed of the bipolar transistors and the CMOS circuit. In the description thus far made, moreover, the MOS.FET is used, but the present invention should not be limited thereto. For example, the MIS.FET (i.e., Metal-Insulator-Semiconductor.FET), which has its gate insulating film formed of thermally oxidized SiO_2 and the silicon nitride film (SiN) formed over the SiO_2 may also be used.

The effects to be obtained by the representative of the invention disclosed herein will be briefly described in the following.

(1) According to the semiconductor wafer manufacturing process of the present invention, any semiconductor substrate body of high price and density need not be used so that the cost for the semiconductor wafer capable of realizing high element characteristics and reliability can be lowered.

(2) According to the semiconductor integrated circuit device manufacturing process of the present invention, a gate insulating film having an excellent film quality can be formed by forming the gate insulating film of a MOS.FET over a semiconductor single crystal layer so that the gate insulating film can have its breakdown voltage raised to reduce the defect density of the gate insulating film. Moreover, the semiconductor substrate body of high price

and density need not be used, but the semiconductor single crystal layer can be thinned to reduce the cost for the semiconductor integrated circuit device having high element characteristics and reliability. As a result, it is possible to improve the performance, production yield and reliability of the semiconductor integrated circuit device and to lower the cost for the semiconductor integrated circuit device.

(3) According to the semiconductor integrated circuit device manufacturing process of the present invention, the degree of freedom for setting the impurity concentration and depth is so high when a semiconductor region such as a well is formed in the semiconductor substrate, as to facilitate the control of the formation. As a result, it is possible to reduce the defective products thereby to improve the production yield. Moreover, the cost for the semiconductor integrated circuit device can be lowered.

(4) According to the semiconductor integrated circuit device manufacturing process of the present invention, the impurity concentration of the semiconductor substrate body is made higher than that of the semiconductor single crystal layer, so that the resistance of the semiconductor substrate body can be relatively lowered to improve the resistance to the latchup. As a result, it is possible to further improve the performance, production yield and reliability of the semiconductor integrated circuit device.

(5) According to the semiconductor integrated circuit device manufacturing process of the present invention, since the first semiconductor region is formed by the ion implantation method and the thermal diffusion method, the semiconductor integrated circuit device can be manufactured without being accompanied by any change in the design or manufacture process but by using the same method as that of the semiconductor integrated circuit device having the so-called "mirror wafer", when it is to be manufactured by using the semiconductor wafer having the semiconductor single crystal layer over the semiconductor substrate body.

(6) According to the semiconductor integrated circuit device manufacturing process of the present invention, since the memory cell of the dynamic type random access memory is formed over the semiconductor single crystal layer having less defects such as the precipitation of oxygen, it is possible to reduce the junction leakage current in the source region and the drain region of the transfer MOS-.FET of the memory cell. Since, moreover, the charge leakage in the capacitor of the memory cell can be suppressed to elongate the charge storage time period, it is possible to improve the refresh characteristics. As a result, it is possible to improve the performance, reliability and production yield of the dynamic type random access memory.

(7) According to the semiconductor integrated circuit device manufacturing process of the present invention, since the memory cell of the static type random access memory is formed over the semiconductor single crystal layer having less defects such as the precipitation of oxygen, the junction leakage current of the source region and drain region of the MOS.FET composing the memory cell can be reduced to improve the data storage retaining characteristics (e.g., the data retention level) thereby to reduce the data retention fault percentage. As a result, it is possible to improve the performance, reliability and production yield of the static type random access memory.

(8) According to the semiconductor integrated circuit device manufacturing process of the present invention, the memory cell of a read only memory capable of electrically erasing and programming data is formed over the semiconductor single crystal layer having less defects such as the precipitation of oxygen, so that the resistance to the data programming can be improved. Moreover, the dispersion of the data erasure can be reduced. As a result, it is possible to improve the performance, reliability and production yield of the read only memory capable of electrically erasing and programming the data.

What is claimed is:

1. A method of manufacturing a semiconductor integrated circuit device, comprising steps of:

preparing a semiconductor body having a first conductivity type and having a predetermined impurity concentration at a whole of a principal surface of said semiconductor body;

forming an epitaxial layer of said first conductivity type on said principal surface of said predetermined impurity concentration such that said epitaxial layer contacts said principal surface of said predetermined impurity concentration and has the same impurity concentration as a designed impurity concentration of said predetermined impurity concentration;

forming a well region in said epitaxial layer by introducing an impurity in said epitaxial layer through a surface of said epitaxial layer;

forming an oxide film, serving as a gate insulating film of a MISFET, on a surface of said epitaxial layer by oxidation of said surface of said epitaxial layer; and

forming a gate electrode of said MISFET on said oxide film,

wherein said predetermined impurity concentration at the whole of said principal surface of said semiconductor body is lower than an impurity concentration of a portion of said well region where a channel region of said MISFET is formed.

2. A method of manufacturing a semiconductor integrated circuit device according to claim **1**, wherein a film thickness of said epitaxial layer is within a range of 0.3 to 5 μm.

3. A method of manufacturing a semiconductor integrated circuit device according to claim **1** or claim **2**, wherein said semiconductor body has a gettering layer on a back surface of said semiconductor body in said semiconductor body preparing step.

4. A method of manufacturing a semiconductor integrated circuit device, comprising steps of:

preparing a semiconductor body having a first conductivity type, having a relatively lightly doped impurity concentration and having a predetermined impurity concentration at a whole of a principal surface of said semiconductor body;

forming an epitaxial layer of said first conductivity type on said principal surface of said predetermined impurity concentration such that said epitaxial layer contacts said principal surface of said predetermined impurity concentration and has the same impurity concentration as a designed impurity concentration of said predetermined impurity concentration;

forming a well region in said epitaxial layer by introducing an impurity in said epitaxial layer through a surface of said epitaxial layer;

forming an oxide film on a surface of said epitaxial layer at said well region by oxidation of said surface of said epitaxial layer; and

forming an electrode on said oxide film,

wherein said predetermined impurity concentration at the whole of said principal surface of said semiconductor

body is lower than an impurity concentration of said well region, wherein an impurity concentration of said semiconductor body is lower than an impurity concentration of said well region.

5. A method of manufacturing a semiconductor integrated circuit device according to claim **4**, wherein a film thickness of said epitaxial layer is within a range of 0.3 μm to 5 μm.

6. A method of manufacturing a semiconductor integrated circuit device according to claim **4** or claim **5**, wherein said semiconductor body has a gettering layer on a back surface of said semiconductor body in said semiconductor body preparing step.

7. A method of manufacturing a semiconductor integrated, circuit device according to claim **3**, wherein said gettering layer is formed by depositing a polycrystalline silicon film.

8. A method of manufacturing a semiconductor integrated circuit device according to claim **6**, wherein said gettering layer is formed by depositing a polycrystalline silicon film.

9. A method of manufacturing a semiconductor integrated circuit device according to claim **1**, wherein an impurity concentration of said semiconductor body is lower than an impurity concentration of said well region.

10. A method of manufacturing a semiconductor integrated circuit device according to claim **4**, wherein said oxide film serves as a gate insulating film of an MISFET,

wherein said electrode serves as a gate electrode of said MISFET,

wherein said predetermined impurity concentration at the whole of said principal surface of said semiconductor body is lower than an impurity concentration of a portion of said well region where a channel region of said MISFET is formed, and

wherein a drain region and a source region of said MISFET are formed in said epitaxial layer.

11. A method of manufacturing a semiconductor integrated circuit device according to claim **1**, wherein said well region has said first conductivity type.

12. A method of manufacturing a semiconductor integrated circuit device comprising steps of:

forming a well region in an epitaxial layer on a semiconductor body having a relatively lightly doped impurity concentration, wherein said semiconductor body has a first conductivity type and a first impurity concentration at a whole of a principal surface of said semiconductor body, and

wherein said epitaxial layer has said first conductivity type and is formed on said principal surface of said first impurity concentration such that said epitaxial layer contacts said principal surface of said first impurity concentration and such that said epitaxial layer has the same impurity concentration as a designed impurity concentration of said predetermined impurity concentration, said well region being formed in said epitaxial layer by introducing an impurity in said epitaxial layer through a surface of said epitaxial layer;

forming an oxide film, serving as a gate insulating film of an MISFET, on a surface of said epitaxial layer by oxidation of said surface of said epitaxial layer; and

forming a gate electrode of said MISFET on said oxide film,

wherein said first impurity concentration at the whole of said principal surface of said semiconductor body is lower than an impurity concentration of a portion of said well region where a channel region of said MISFET is to be formed.

13. A method of manufacturing a semiconductor integrated circuit device according to claim **12**, wherein a film thickness of said epitaxial layer is within a range of 0.3 to 5 μm.

14. A method of manufacturing a semiconductor integrated circuit device according to claim **13**, wherein said semiconductor body has a gettering layer on a back surface thereof.

15. A method of manufacturing a semiconductor integrated circuit device according to claim **14**, wherein said gettering layer is formed by depositing a polycrystalline silicon film.

16. A method of manufacturing a semiconductor integrated circuit device according to claim **12**, wherein said semiconductor body has a gettering layer on a back surface thereof.

17. A method of manufacturing a semiconductor integrated circuit device according to claim **16**, wherein said gettering layer is formed by depositing a polycrystalline silicon film.

18. A method of manufacturing a semiconductor integrated circuit device according to claim **12**, wherein said well region has said first conductivity type.

19. A method of manufacturing a semiconductor integrated circuit device according to claim **1**, wherein said semiconductor body is a relatively lightly doped semiconductor body.

20. A method of manufacturing a semiconductor integrated circuit device according to claim **1**, wherein an impurity concentration of said semiconductor body is about 10^{15} atoms/cm^3.

21. A method of manufacturing a semiconductor integrated circuit device according to claim **4**, wherein an impurity concentration of said semiconductor body is about 10^{15} atoms/cm^3.

22. A method of manufacturing a semiconductor integrated circuit device, comprising steps of:

providing a relatively lightly doped semiconductor body having a first conductivity type and having a predetermined impurity concentration at a whole of a principal surface of said semiconductor body;

forming an epitaxial layer of said first conductivity type, having a relatively lightly doped impurity concentration, on said principal surface of said predetermined impurity concentration;

forming a first well region in said epitaxial layer by introducing an impurity in said epitaxial layer through a surface of said epitaxial layer;

forming an oxide film, serving as a gate insulating film of a MISFET, on a surface of said epitaxial layer by oxidation of said surface of said epitaxial layer; and

forming a gate electrode of said MISFET on said oxide film on said first well region,

wherein an impurity concentration of a portion of said first well region where a channel region of said MISFET is to be formed is greater than both an impurity concentration of said epitaxial layer and said predetermined impurity concentration of said semiconductor body.

23. A method of manufacturing a semiconductor integrated circuit device according to claim **22**, wherein an impurity concentration of said semiconductor body is about 10^{15} atoms /cm^3.

24. A method of manufacturing a semiconductor integrated circuit device according to claim **22**, wherein a thickness of said epitaxial layer is within a range of 0.3 μm to 5 μm.

25. A method of manufacturing a semiconductor integrated circuit device according to claim **22**, wherein an impurity concentration of said first well region gradually

decreases in said epitaxial layer, in a thickness direction of the epitaxial layer.

26. A method of manufacturing a semiconductor integrated circuit device according to claim **25**, further comprising the step of forming a second well region of a second conductivity type, opposite to said first conductivity type, in said epitaxial layer, by introducing an impurity in said epitaxial layer through said surface of said epitaxial layer,

wherein an impurity concentration of a portion of said second well region where a channel region of a MISFET is to be formed is greater than both an impurity concentration of said epitaxial layer and said predetermined impurity concentration of said semiconductor body, and

wherein an impurity concentration of said second well region gradually decreases in said epitaxial layer in the thickness direction of the epitaxial layer.

27. A method of manufacturing a semiconductor integrated circuit device according to claim **22**, wherein said first well region extends in said semiconductor body such that an impurity concentration of said first well region gradually decreases from said epitaxial layer on said semiconductor body through an interface portion between the epitaxial layer and the semiconductor body.

28. A method of manufacturing a semiconductor integrated circuit device according to claim **27**, further comprising the step of forming a second well region of a second conductivity type opposite to said first conductivity type, in said epitaxial layer, by introducing an impurity in said epitaxial layer through said surface of said epitaxial layer,

wherein sand impurity concentration of a portion of said second well region where a channel region of a MISFET is to be formed is greater than both an impurity concentration of said epitaxial layer and said predetermined impurity concentration of said semiconductor body, and

wherein said second well region extends in said semiconductor body such that an impurity concentration of said second well region gradually decreases from said epitaxial layer on said semiconductor body through an interface portion between the epitaxial layer and the semiconductor body.

29. A method of manufacturing a semiconductor integrated circuit device, comprising steps of:

providing a semiconductor body having a first conductivity type and having a predetermined impurity concentration at a whole of a principal surface of said semiconductor body;

forming an epitaxial layer of said first conductivity type on said principal surface of said predetermined impurity concentration;

forming a first well region in said epitaxial layer by introducing an impurity in said epitaxial layer through a surface of said epitaxial layer;

forming an oxide film on a surface of said epitaxial layer by oxidation of said surface of said epitaxial layer; and

forming an electrode on said oxide film on said first well region,

wherein an impurity concentration of said first well region is greater than both an impurity concentration of said epitaxial layer and said predetermined impurity concentration of said semiconductor body.

30. A method of manufacturing a semiconductor integrated circuit device according to claim **29**, wherein an impurity concentration of said semiconductor body is about 10^{15} atoms/cm^3.

31. A method of manufacturing a semiconductor integrated circuit device according to claim **29**, wherein a thickness of said epitaxial layer is within a range of 0.3 to 5 μm.

32. A method of manufacturing a semiconductor integrated circuit device according to claim **29**, wherein an impurity concentration of said first well region gradually decreases in said epitaxial layer in a thickness direction of the epitaxial layer.

33. A method of manufacturing a semiconductor integrated circuit device according to claim **32**, further comprising the step of forming a second well region of a second conductivity type opposite to said first conductivity type, in said epitaxial layer, by introducing an impurity in said epitaxial layer through said surface of said epitaxial layer,

wherein an impurity concentration of a portion of said second well region where a channel region of a MISFET is to be formed is greater than both the impurity concentration of said epitaxial layer and said predetermined impurity concentration of said semiconductor body, and

wherein an impurity concentration of said second well region gradually decreases in said epitaxial layer in the thickness direction of the epitaxial layer.

34. A method of manufacturing a semiconductor integrated circuit device according to claim **29**, wherein said first well region extends in said semiconductor body such that an impurity concentration of said first well region gradually decreases from said epitaxial layer on said semiconductor body through an interface portion between the epitaxial layer and the semiconductor body.

35. A method of manufacturing a semiconductor integrated circuit device according to claim **34**, further comprising the step of forming a second well region of a second conductivity type opposite to said first conductivity type, in said epitaxial layer, by introducing an impurity in said epitaxial layer through said surface of said epitaxial layer,

wherein an impurity concentration of a portion of said second well region where a channel region of a MISFET is to be formed is greater than both an impurity concentration of said epitaxial layer and said predetermined impurity concentration of said semiconductor body, and

wherein said second well region extends in said semiconductor body such that an impurity concentration of said second well region gradually decreases from said epitaxial layer on said semiconductor body through an interface portion between said epitaxial layer and second semiconductor body.

36. A method of manufacturing a semiconductor integrated circuit device according to claim **1**, wherein an impurity concentration of said well region gradually decreases in said epitaxial layer in a thickness direction of the epitaxial layer.

37. A method of manufacturing a semiconductor integrated circuit device according to claim **36**, further comprising the step of forming a further well region of a second conductivity type opposite to said first conductivity type in said epitaxial layer, by introducing an impurity in said epitaxial layer through said surface of said epitaxial layer,

wherein an impurity concentration of a portion of said further well region where a channel region of a MISFET is to be formed is greater than both an impurity concentration of said epitaxial layer and said predetermined impurity concentration of said semiconductor body, and

wherein an impurity concentration of said further well region gradually decreases in said epitaxial layer in the thickness direction.

38. A method of manufacturing a semiconductor integrated circuit device according to claim **1**, wherein said well region extends in said semiconductor body such that an impurity concentration of said well region gradually decreases from said epitaxial layer on said semiconductor body through an interface portion between the epitaxial layer and the semiconductor body.

39. A method of manufacturing a semiconductor integrated circuit device according to claim **38**, further comprising the step of forming a further well region of a second conductivity type opposite to said first conductivity type in said epitaxial layer by introducing an impurity in said epitaxial layer through said surface of said epitaxial layer,

wherein an impurity concentration of a portion of said further well region where a channel region of a MISFET is to be formed is greater than both an impurity concentration of said epitaxial layer and said predetermined impurity concentration of said semiconductor body, and

wherein said further well region extends in said semiconductor body such that an impurity concentration of said further well region gradually decreases from said epitaxial layer in said semiconductor body through an interface portion between the epitaxial layer and the semiconductor body.

40. A method of manufacturing a semiconductor integrated circuit device according to claim **12**, wherein said well region extends in said semiconductor body such that an impurity concentration of said well region gradually decreases from said epitaxial layer on said semiconductor body through an interface portion between the epitaxial layer and the semiconductor body.

41. A method of manufacturing a semiconductor integrated circuit device according to claim **40**, further comprising the step of forming a further well region of a second conductivity type opposite to said first conductivity type in said epitaxial layer by introducing an impurity in said epitaxial layer through said surface of said epitaxial layer,

wherein an impurity concentration of a portion of said further well region where a channel region of a MISFET is to be formed is greater than both an impurity concentrating of said epitaxial layer and said predetermined impurity concentration of said semiconductor body, and

wherein said further well region extends in said semiconductor body such that an impurity concentration of said further well region gradually decreases from said epitaxial layer on said semiconductor body through an interface portion between said epitaxial layer and the semiconductor body.

42. A method of manufacturing a semiconductor integrated circuit device according to claim **12**, wherein an impurity concentration of said semiconductor body is about 10^{15} atoms/cm^3.

* * * * *