US007450598B2

(12) **United States Patent**
Chen et al.

(10) **Patent No.: US 7,450,598 B2**
(45) **Date of Patent: Nov. 11, 2008**

(54) **SYSTEM AND METHOD TO PROVISION MPLS/VPN NETWORK**

(75) Inventors: **Wenge Chen**, Pleasanton, CA (US); **Holly Chen**, San Ramon, CA (US); **Kuo-Hui Liu**, San Ramon, CA (US); **Shih Chung Soon**, Dublin, CA (US); **Bei Zhou**, Pleasanton, CA (US)

(73) Assignee: **AT&T Intellectual Property I, L.P.**, Reno, NV (US)

(*) Notice: Subject to any disclaimer, the term of this patent is extended or adjusted under 35 U.S.C. 154(b) by 957 days.

(21) Appl. No.: **10/736,445**

(22) Filed: **Dec. 15, 2003**

(65) **Prior Publication Data**

US 2006/0182037 A1 Aug. 17, 2006

(51) **Int. Cl.**
H04L 12/54 (2006.01)

(52) **U.S. Cl.** **370/409**; 370/254

(58) **Field of Classification Search** 370/254, 370/401, 230, 234, 223
See application file for complete search history.

(56) **References Cited**

U.S. PATENT DOCUMENTS

6,529,513	B1	3/2003	Howard et al.	
6,532,088	B1	3/2003	Dantu et al.	
6,594,268	B1	7/2003	Aukia et al.	
6,909,696	B1 *	6/2005	Zavgren, Jr.	370/245
7,024,472	B1 *	4/2006	Datta et al.	709/223
2002/0181477	A1 *	12/2002	Mo et al.	370/401
2002/0186664	A1 *	12/2002	Gibson et al.	370/254
2002/0191541	A1 *	12/2002	Buchanan et al.	370/230
2003/0079043	A1 *	4/2003	Chang et al.	709/249
2004/0037275	A1 *	2/2004	Li et al.	370/370
2004/0093492	A1 *	5/2004	Daude et al.	713/156
2004/0255028	A1 *	12/2004	Chu et al.	709/227
2005/0251568	A1 *	11/2005	Zavgren, Jr.	709/223
2006/0215578	A1 *	9/2006	Andrapalliyal et al.	370/254
2007/0226325	A1 *	9/2007	Bawa et al.	709/223
2007/0226630	A1 *	9/2007	Farid et al.	715/734

(Continued)

FOREIGN PATENT DOCUMENTS

WO WO 02 098046 A2 * 12/2002

(Continued)

OTHER PUBLICATIONS

The latest in virtual private networks: part I Metz, C.; Internet Computing, IEEE vol. 7, Issue 1, Jan.-Feb. 2003 pp. 87-91.*

Primary Examiner—Edan Orgad
Assistant Examiner—Salman Ahmed
(74) *Attorney, Agent, or Firm*—Toler Law Group

(57) **ABSTRACT**

The disclosed method and system provides a new service provision interface that allows operator use without requiring many of the specific technical network details, such as VRF, RT, SOO, route redistribution, etc. Further, the translation from a customer's requirements (including both VPN topology membership requirement and L2, L3 requirement from customer) into technical network configuration commands are handled using an automated method that is transparent to the operator.

In a particular illustrative embodiment of this patent disclosure, a high level table with reduced technical detail is generated by an operator and an automated provisioning system, without operator visibility or required operator interaction, creates intermediate data including network specific technical information in an automated process to generate a deployable network topology including VRF and RT assignments for use in network provisioning.

23 Claims, 9 Drawing Sheets

ON PE1 440

		420	422	424	426	428	430
		CE1	CE4				
402	Full Mesh	Both FM_1	Both FM_1	Both FM_1	Both FM_1	Both FM_1	
404	Full Mesh	Both FM_2	Both FM_2				
406	Full Mesh			Both FM_3			
408	Central Service		Export CS_4_Server_Import Import CS_4_Server_Import				
410	H&S 2 VRFs	Export HS2_5_Hub Import HS2_5_Spoke					
412	H&S 1 VRF			Export HS1_6_Hub Import HS1_6_Spoke	Export HS1_6_Hub Import HS1_6_Spoke	Export HS1_6_Hub Import HS1_6_Spoke	
VRF on PE1 414		VRF_1	VRF_2	VRF_3	VRF_4 432		

ON PE2 450

		CE2	CE3	CE9	
	Full Mesh			Both FM_1	
	Full Mesh				
	Full Mesh	Both FM_3	Both FM_3		Both FM_3
	Central Service	Both CS_4_Server Import CS_4_Server_Import		Export CS_4_Server_Import Import CS_4_Server_Export	Export CS_4_Server_Import Import CS_4_Server_Export
	H&S 2 VRFs			Export HS1_5_Hub Import HS1_5_Spoke	
	H&S 1 VRF		Export HS1_6_Spoke Import HS1_6_Hub		Export HS1_6_Hub Import HS1_6_Spoke
VRF on PE2		VRF_1	VRF_2	VRF_3	VRF_4

ON PE3 460

	Topology	CE5	CE6	CE7	CE8
	Full Mesh				
	Full Mesh			Both FM_2	
	Full Mesh				Both FM_3
	Central Service				Both CS_4_Server Import CS_4_Server_Import
	H&S 2 VRFs	Export HS2_5_Hub Import HS2_5_Spoke	Export HS2_5_Spoke	Import HS2_5_Hub	Export HS2_5_Hub ImportHS2_5_Spoke
VRF on PE3		VRF_1	VRF_2	VRF_3	VRF_4

U.S. PATENT DOCUMENTS

2008/0101385 A1 * 5/2008 Elias et al. 370/401

FOREIGN PATENT DOCUMENTS

WO WO 02 099571 A2 * 12/2002
WO WO 02 100043 A1 * 12/2002
WO WO 02099571 * 12/2002
WO WO 03009528 * 1/2003

* cited by examiner

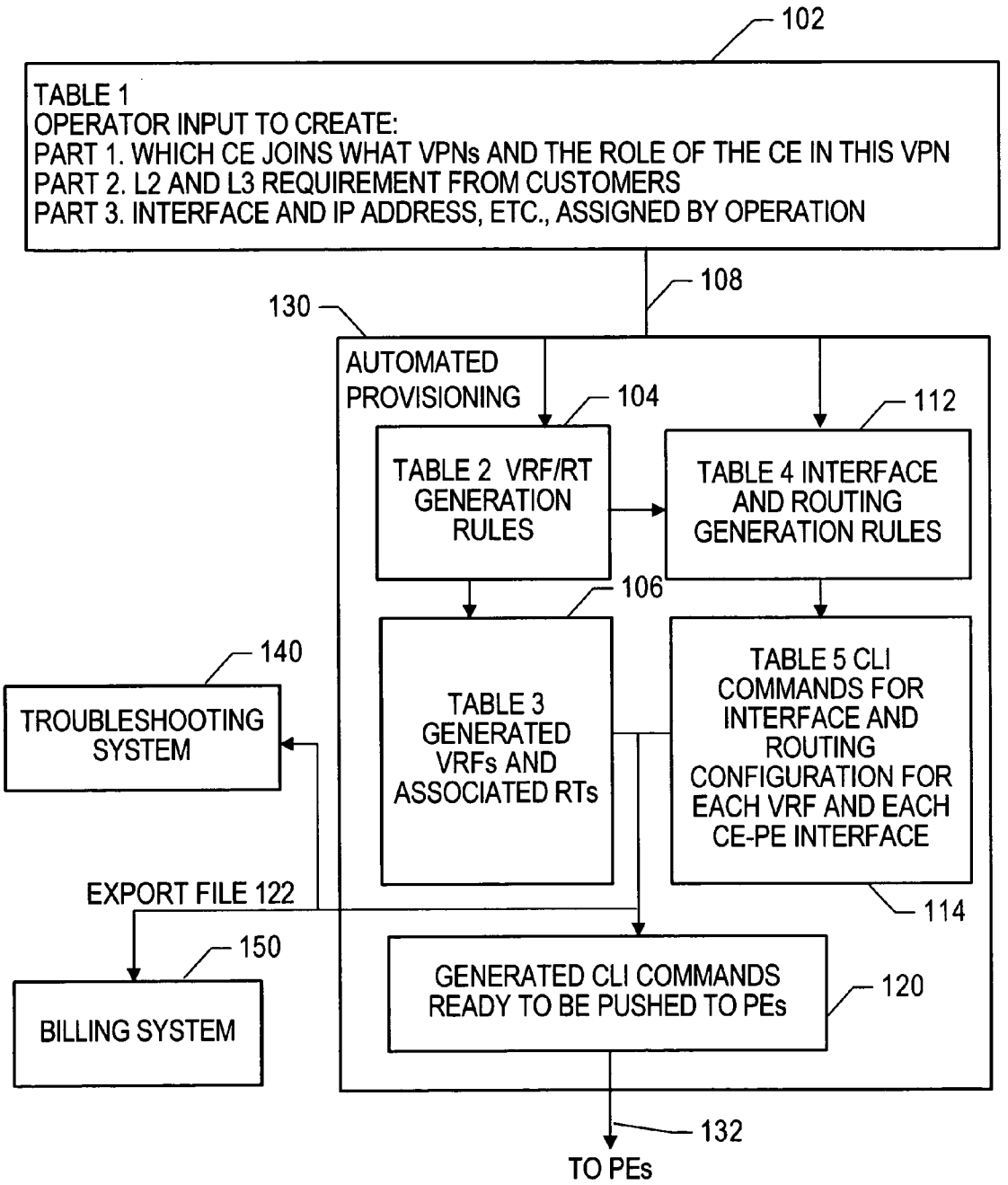
102
TABLE 1
OPERATOR INPUT TO CREATE:
PART 1. WHICH CE JOINS WHAT VPNs AND THE ROLE OF THE CE IN THIS VPN
PART 2. L2 AND L3 REQUIREMENT FROM CUSTOMERS
PART 3. INTERFACE AND IP ADDRESS, ETC., ASSIGNED BY OPERATION
108
130
AUTOMATED PROVISIONING
104
112
TABLE 2 VRF/RT GENERATION RULES
TABLE 4 INTERFACE AND ROUTING GENERATION RULES
106
140
TROUBLESHOOTING SYSTEM
TABLE 3 GENERATED VRFs AND ASSOCIATED RTs
TABLE 5 CLI COMMANDS FOR INTERFACE AND ROUTING CONFIGURATION FOR EACH VRF AND EACH CE-PE INTERFACE
EXPORT FILE 122
114
150
BILLING SYSTEM
GENERATED CLI COMMANDS READY TO BE PUSHED TO PEs
120
132
TO PEs

FIG. 1

Table 1 : EXAMPLE OF MPLS/VPN SERVICE PROVISIONING TABLE 102

			Customer A											Customer B	
		Topology	CE1	CE2	CE3	CE4	CE5	CE6	CE7	CE8	CE9	CE10	CE11	CE12	CE13
Part 1 202	VPN1	Full Mesh	√			√					√	√		√	√
	VPN2	Full Mesh	√			√			√						
	VPN3	Full Mesh		√	√					√		√	√		
	VPN4	Central Service		√ Server		√ Client				√ Server	√ Client		√ Client		
	VPN5	H&S 2 VRFs	√ Spoke				√ Spoke	√ Hub_Spk	√ Hub_Hub		√ Spoke				
	VPN6	H&S 1 VRF			√ Hub							√ Spoke	√ Spoke	√ Spoke	√ Spoke
Part 2 204	L2 requirement (Encapsulation, CRC, Clock, ATM VC, etc)		Aal5snap VBR2M/ 2M/32	PPP CRC 32	PPP CRC 32	FR CRC 32	PPP CRC 32	Aal5snap UBR 512K	FR 256K		PPP CRC 16	HDLC CRC 32	PPP CRC 32	FR CRC 32	PPP CRC 16
	L3 requirement Routing Area/AS etc.		OSPF Area 0	EBGP 9999	RIP	OSPF Area 0	OSPF Area 7	Static	OSPF Area 0	RIP	EBGP 9999	EBGP 1777	OSPF Area 1	RIP	Static
	Location of CE		LA	SF	SF	LA	SJ	SJ	SJ	SJ	SF	LA	SF	LA	LA
Part 3 206	IP interface on PE		PE1 ATM4/ 4.10	PE2 POS3/0	PE2 S7/1	PE1 S7/2	PE3 S7/1	PE3 ATM4/ 0.1	PE3 S1/0/15.0	PE3 GE2/0	PE2 POS3/1	PE1 S5/1	PE2 S7/7	PE1 S7/4	PE1 POS3/ 1
	IP address/mask		IP address/mask can be assigned manually or automatically from IP address pools.												
	Inbound QoS (profile #)		1	2	4	4	4	9	10	5	2	4	7	8	4
	Outbound QoS (profile #)		1	2	3	3	3	9	10	5	2	4	7	8	3
	MD5		Y	Y	Y	Y	Y		Y	Y	Y	Y	Y	Y	
	Others														

FIG. 2

TABLE 2: LOGICAL MAPPING OF VRF AND ASSOCIATED RTs TO VPN FOR DIFFERENT TOPOLOGIES

FM = FULL MESH HB1 = ONE VRF BASED HUB AND SPOKE HB2 = TWO VRF BASED HUB AND SPOKE
CS = CENTRAL SERVICE n = SEQUENCE NUMBER OF VPN m = SEQUENCE NUMBER OF CE

302 304 306

VPN TOPOLOGY	**VRF (IN BOLD) AND RTS (IN ITALIC)**			**NOTES**
FULL MESH 310	**VRF_FM_n** *Both FM_n*			One VRF on Each PE One RT per VRF
H&S TWO BASED 312	**VRF_HS2_HUB_Hub** Import *HS2_n_Hub*	**VRF_HS2_HUB_Spoke** *Export HS2_n_Spoke*	**VRF_HS2_Spoke_m** *Export HS2_n_Hub* *Export HS2_n_Spoke*	One VRFs for each CE (even on PE) One unique RT for HUB_Hnb VRF One unique RT for HUB_Spoke VRF Two RTs for each spoke CE CE VRF on different PEs.
H&S ONE VRF BASED **(WITH DEFAULT ROUTE)** 314	**VRF_HS1_HUB** *Export HS1_n Spoke* *Import HS1_n_Hub*		**VRF_HS1_Spoke_m** *Export HS1_n_Hub* *Import HS1_n_Spoke*	One VRFs for each CE (even on PE) Two RTs for HUB VRF Two RTs for Spoke CE VRF but they are same for all CE VRF on different PEs.
CENTRAL SERVICE 316	**VRF_CS_n_Server** *Both CS_n_Server* *Import CS_n_Server_Import*		**VRF_CS_n_Spoke_m** *Export CS_n_Server_Import* *Import CS_n_Server*	One VRF for each CE Two RTs for Server VRF Two RTs for each Spoke VRF

330 332 334

FIG. 3

ON PE1 440

		420 CE1	422 CE4	424	426	428	430
402	Full Mesh	*Both FM_1*	*Both FM_1*	*Both FM_1*	*Both FM_1*	*Both FM_1*	
404	Full Mesh	*Both FM_2*	*Both FM_2*				
406	Full Mesh			*Both FM_3*			
408	Central Service		*Export CS_4_Server_Import* *Import CS_4_Server_Import*				
410	H&S 2 VRFs	*Export HS2_5_Hub* *Import HS2_5_Spoke*					
412	H&S 1 VRF			*Export HS1_6_Hub* *Import HS1_6_Spoke*	*Export HS1_6_Hub* *Import HS1_6_Spoke*	*Export HS1_6_Hub* *Import HS1_6_Spoke*	
VRF on PE1 414		**VRF_1**	**VRF_2**	**VRF_3**	**VRF_4** 432		

ON PE2 450

		CE2	CE3	CE9	
	Full Mesh			*Both FM_1*	
	Full Mesh				
	Full Mesh	*Both FM_3*	*Both FM_3*		*Both FM_3*
	Central Service	*Both CS_4_Server Import* *CS_4_Server_Import*		*Export CS_4_Server_Import* *Import CS_4_Server_Export*	*Export CS_4_Server_Import* *Import CS_4_Server_Export*
	H&S 2 VRFs			*Export HS1_5_Hub* *Import HS1_5_Spoke*	
	H&S 1 VRF		*Export HS1_6_Spoke* *Import HS1_6_Hub*		*Export HS1_6_Hub* *Import HS1_6_Spoke*
VRF on PE2		**VRF_1**	**VRF_2**	**VRF_3**	**VRF_4**

FIG. 4A

ON PE3 460

	Topology	CE5	CE6	CE7	CE8
	Full Mesh				
	Full Mesh			*Both FM_2*	
	Full Mesh				*Both FM_3*
	Central Service				*Both CS_4_Server* *Import CS_4_Server_Import*
	H&S 2 VRFs	*Export HS2_5_Hub* *Import HS2_5_Spoke*	*Export HS2_5_Spoke*	*Import HS2_5_Hub*	*Export HS2_5_Hub* *ImportHS2_5_Spoke*
VRF on PE3		**VRF_1**	**VRF_2**	**VRF_3**	**VRF_4**

FIG. 4B

FIG. 4A
FIG. 4B

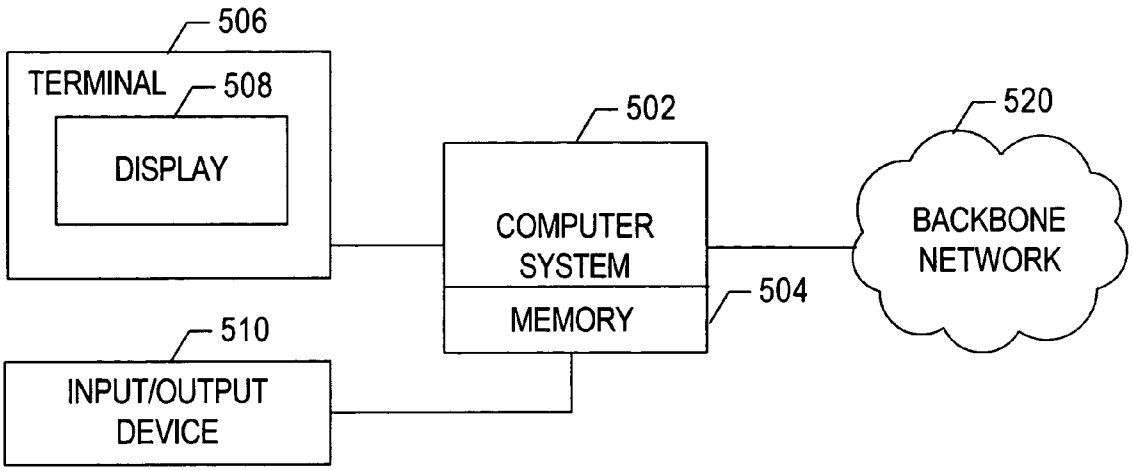
506
TERMINAL
508
DISPLAY
502
COMPUTER SYSTEM
MEMORY
504
520
BACKBONE NETWORK
510
INPUT/OUTPUT DEVICE

FIG. 5

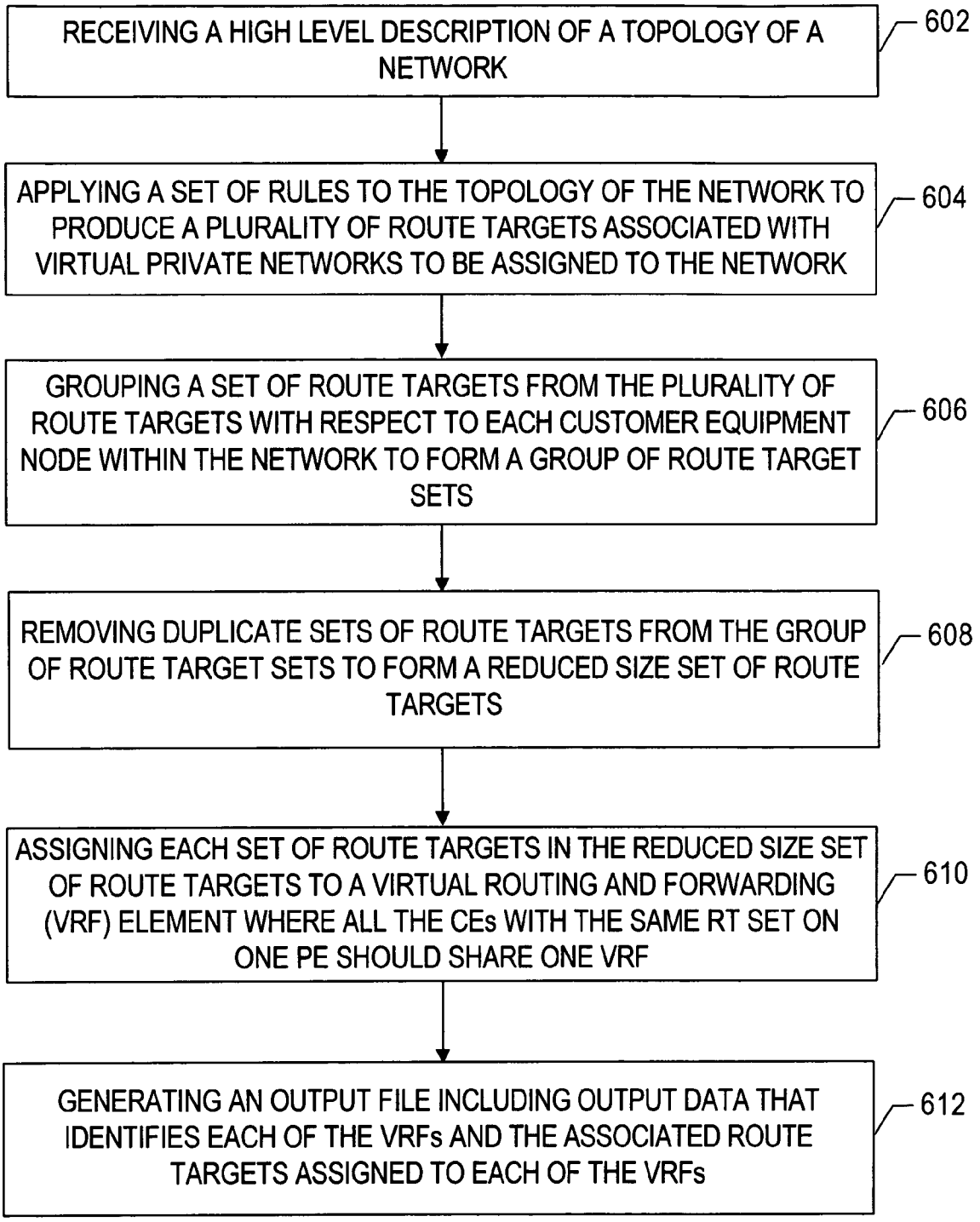
RECEIVING A HIGH LEVEL DESCRIPTION OF A TOPOLOGY OF A NETWORK
602
APPLYING A SET OF RULES TO THE TOPOLOGY OF THE NETWORK TO PRODUCE A PLURALITY OF ROUTE TARGETS ASSOCIATED WITH VIRTUAL PRIVATE NETWORKS TO BE ASSIGNED TO THE NETWORK
604
GROUPING A SET OF ROUTE TARGETS FROM THE PLURALITY OF ROUTE TARGETS WITH RESPECT TO EACH CUSTOMER EQUIPMENT NODE WITHIN THE NETWORK TO FORM A GROUP OF ROUTE TARGET SETS
606
REMOVING DUPLICATE SETS OF ROUTE TARGETS FROM THE GROUP OF ROUTE TARGET SETS TO FORM A REDUCED SIZE SET OF ROUTE TARGETS
608
ASSIGNING EACH SET OF ROUTE TARGETS IN THE REDUCED SIZE SET OF ROUTE TARGETS TO A VIRTUAL ROUTING AND FORWARDING (VRF) ELEMENT WHERE ALL THE CEs WITH THE SAME RT SET ON ONE PE SHOULD SHARE ONE VRF
610
GENERATING AN OUTPUT FILE INCLUDING OUTPUT DATA THAT IDENTIFIES EACH OF THE VRFs AND THE ASSOCIATED ROUTE TARGETS ASSIGNED TO EACH OF THE VRFs
612

FIG. 6

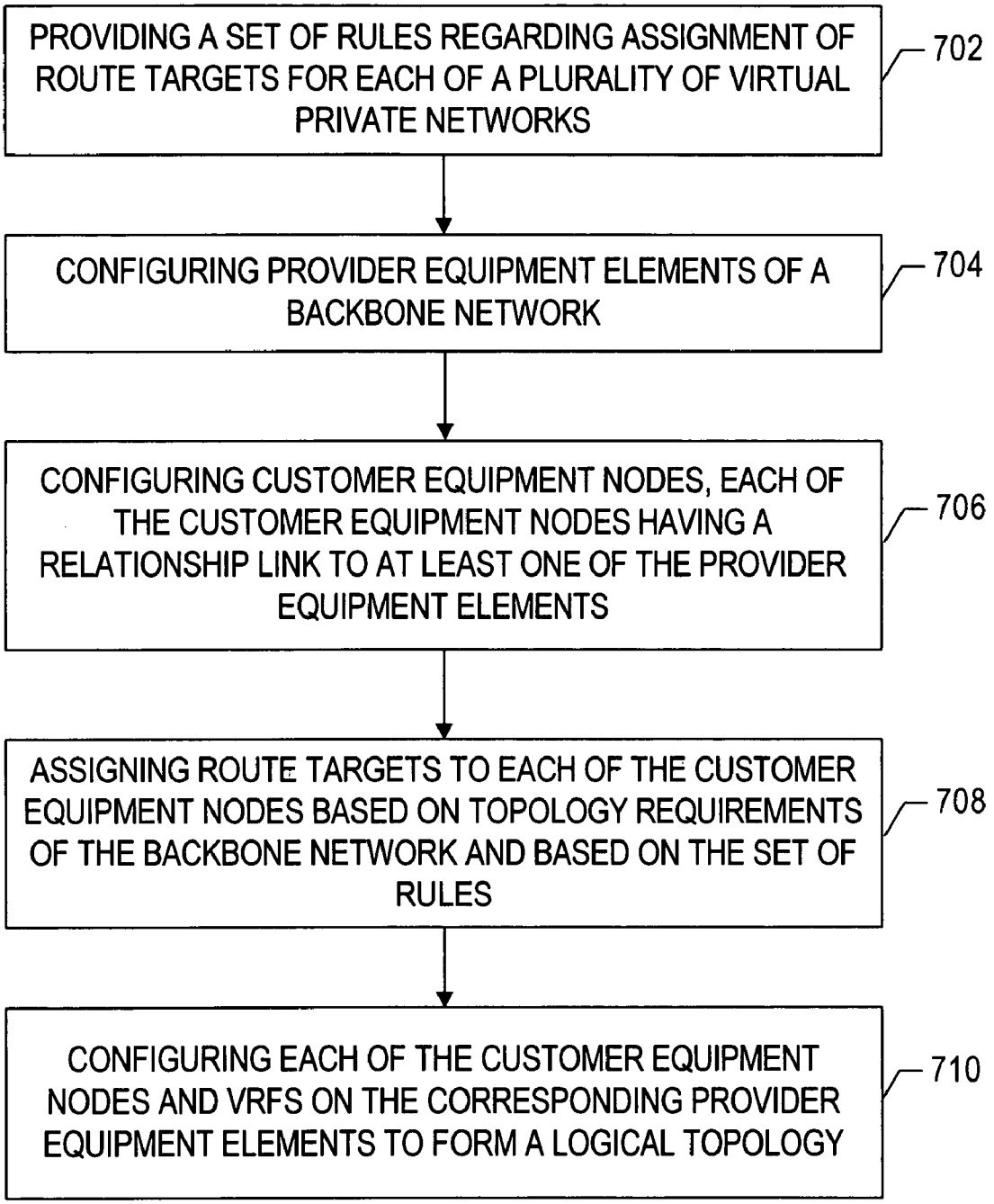
PROVIDING A SET OF RULES REGARDING ASSIGNMENT OF ROUTE TARGETS FOR EACH OF A PLURALITY OF VIRTUAL PRIVATE NETWORKS
702
CONFIGURING PROVIDER EQUIPMENT ELEMENTS OF A BACKBONE NETWORK
704
CONFIGURING CUSTOMER EQUIPMENT NODES, EACH OF THE CUSTOMER EQUIPMENT NODES HAVING A RELATIONSHIP LINK TO AT LEAST ONE OF THE PROVIDER EQUIPMENT ELEMENTS
706
ASSIGNING ROUTE TARGETS TO EACH OF THE CUSTOMER EQUIPMENT NODES BASED ON TOPOLOGY REQUIREMENTS OF THE BACKBONE NETWORK AND BASED ON THE SET OF RULES
708
CONFIGURING EACH OF THE CUSTOMER EQUIPMENT NODES AND VRFS ON THE CORRESPONDING PROVIDER EQUIPMENT ELEMENTS TO FORM A LOGICAL TOPOLOGY
710

FIG. 7

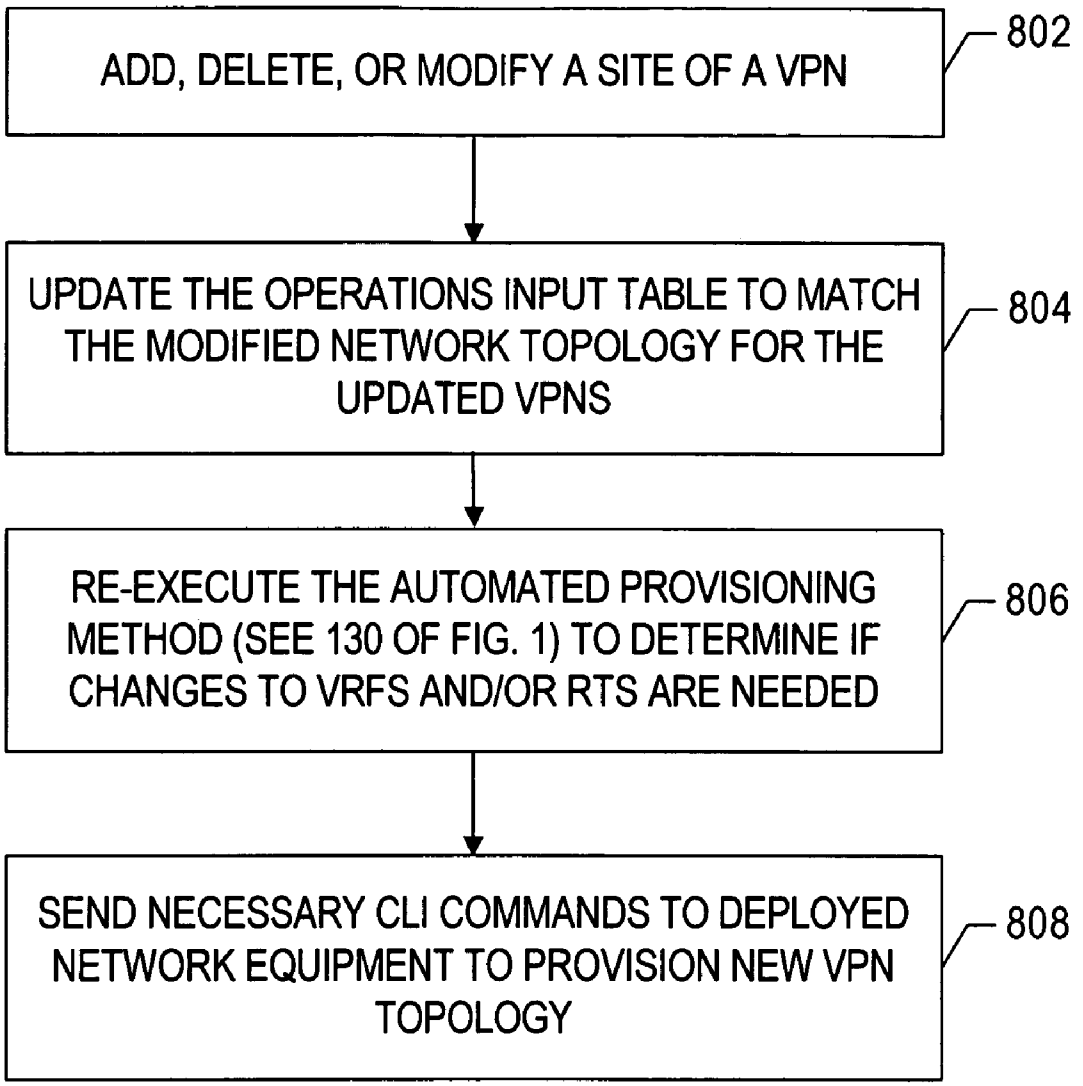
ADD, DELETE, OR MODIFY A SITE OF A VPN
802
UPDATE THE OPERATIONS INPUT TABLE TO MATCH THE MODIFIED NETWORK TOPOLOGY FOR THE UPDATED VPNS
804
RE-EXECUTE THE AUTOMATED PROVISIONING METHOD (SEE 130 OF FIG. 1) TO DETERMINE IF CHANGES TO VRFS AND/OR RTS ARE NEEDED
806
SEND NECESSARY CLI COMMANDS TO DEPLOYED NETWORK EQUIPMENT TO PROVISION NEW VPN TOPOLOGY
808

FIG. 8

SYSTEM AND METHOD TO PROVISION MPLS/VPN NETWORK

FIELD OF THE INVENTION

The present disclosure relates generally to provisioning procedures for networks.

BACKGROUND

In connection with the deployment of high speed data communications networks, manual methods and some forms of automated provisioning software tools have been used. Some of such provisioning tools are available for multi protocol label switching (MPLS) virtual private network (VPN) services.

However, these provisioning tools have some significant drawbacks. For example, operators are required to have an in-depth understanding of the technical details of the MPLS BGP/VPN technology and how to translate a customer's general requirement into such technical details. The operator is required to provide technical details and make technical decisions, such as the specific assignment and deployment of virtual routing and forwarding (VRFs), route targets (RTs), routing redistribution, site of origin, and other similar technical network details.

Secondly, these approaches/tools typically require operators to provision each customer edge router/provider edge router (CE-PE) access individually, again requiring knowledge of technical details, which makes the provisioning process/procedures complex and error prone. The troubleshooting of mistakes made during this process is usually difficult and costly.

Thirdly, these approaches/tools do not provide the flexibility needed to easily accommodate new VPN topology and service changes. Accordingly, there is a need for an improved system and method of provisioning MPLS/VPN systems.

BRIEF DESCRIPTION OF DRAWINGS

FIG. **1** is general diagram that illustrates an automated provisioning process.

FIG. **2** is a general diagram that illustrates an MPLS/VPN service provisioning table.

FIG. **3** is a general diagram that illustrates a rule set for VRF and RT mapping.

FIG. **4** is a general diagram that illustrates tables for VPN to CE mapping for various PE elements.

FIG. **5** is a block diagram to illustrate a network and computer system that may be used to execute a provisioning process.

FIG. **6** is a flow diagram that illustrates a particular provisioning procedure.

FIG. **7** is a flow diagram that illustrates other aspects of a provisioning procedure.

FIG. **8** is a flow diagram that illustrates a method of provisioning a modified topology.

DETAILED DESCRIPTION

The present disclosure is generally directed to a method of provisioning a virtual private network and a computer network operations system that is configured to provide such provisioning. In a particular embodiment, the automated method of provisioning a virtual private network includes receiving a high level description of a topology of a network, applying a set of rules to the topology of the network to produce a plurality of route targets (RTs) associated with virtual private networks to be assigned to the network, grouping a set of route targets from the plurality of route targets with respect to each customer equipment node within the network to form a group of route target sets, removing duplicate sets of route targets from the group of route target sets to form a reduced size set of route targets; assigning each set of route targets in the reduced size set of route targets to a VRF all the CEs with the same RT set on one PE should share one VRF, and generating an output file including output data that identifies each of the VRFs and the associated route targets assigned to each of the VRFs.

In a particular embodiment, the computer network operations system includes a terminal having a display portion, a data input device to receive input from a user, and a computer system having a memory and a processor. The computer system is coupled to the terminal and to the data input device. The display portion of the terminal provides an input screen having a data format configured to prompt the user to provide high-level network topology data via the data input device. The high-level network topology data includes virtual private network information with respect to a backbone data network. The computer system converts the high-level network topology data into a set of route targets to be assigned to VRFs. The set of assigned route targets are stored in the memory.

The disclosed method and system provides a new service provision interface that allows operator use without requiring many of the specific technical network details. Further, the translation from a customer's requirements into technical network configuration commands are handled using an automated method that is transparent to the operator. The technical requirements for operators are significantly reduced allowing operators with less technical experience can be trained at a lower cost. Further, the VPN service order process to be handled more efficiently and more quickly. Also, due to automation, the number of mistakes made during the provisioning process is reduced.

In addition, the disclosed service provisioning method allows provisioning in an efficient manner using an overall system view instead of a link by link method. The disclosed provisioning system may consider the cost of assigning VRFs as well as access costs when determining which provider edge router (PE) a particular customer edge router (CE) is to be attached to.

Referring to FIG. **1**, a flow diagram that illustrates a particular embodiment of a provisioning procedure is shown. The flow diagram includes a first table **102** that is formed by operator input and includes an automated provisioning system **130** that includes a plurality of additional tables created by an automated software tool. The output **132** from the automated provisioning processing is a set of commands that are deployed to a network, such as to various PE nodes within an MPLS network. Data files **122** may be exported from the automated provisioning system **130** and sent to other systems, such as a troubleshooting system **140** or a billing system **150**. The data files **122** provided by the provisioning system **130** are often useful to technical support personnel in resolving technical problems reported by customers, such as issues relating to network configurations and performance. Also, the billing system **150** may use input from the exported file **122** to add new billing parameters and to charge for use of network resources, such as charges based on the number of virtual routing and forwarding elements (VRFs) used by a particular VPN topology. Thus, the cost of assigning VRFs may be considered in the bills sent to customers.

The operator inputted table **102** includes a first part that includes data to identify customer edge router (CE) and associated VPNs. A second part of the table **102** identifies layer **2** and layer **3** network requirements received from customers. The third part of the operator table **102** includes interfaces and IP address assignments. A resulting data table **108** is provided to the automated provisioning system **130**. Within the provisioning system **130** a set of, VRF/RT rules **104** are used to generate a table **106** that includes assigned VRFs and RTs. Also, a table **112** having interface and routing generation rules is used to create CLI commands, such as in table **114**, for each VRF and each associated CE-PE interface. The outputs from the generated VRFs and RTs and the CLI commands are communicated to a module **120** to generate CLI commands for the CEs and prepare data to be communicated to PEs. The resulting data output **132** is then deployed to PEs to deploy the provisioned topology in the network. An example of a VRF is found within a commercial router, such as those made by Cisco, Inc., that are deployed in distributed data communication networks.

Referring to FIG. **2**, an example of the operator inputted table **102** is illustrated. The table **102** includes a first portion **202**, a second portion **204**, and a third portion **206**. The first portion **202** includes VPN to CE mapping and topology selection or each VPN. The second portion **204** identifies the layer **2** and layer **3** network requirements and CE locations. The third portion **206** identifies IP interface on PE and IP address and quality of service (QoS) requirements and profiles. Customer information is also included in table **102**, such as the customer A and customer B in the first row; CE**1**-CE**11** belong to customer A and CE**12**-CE**13** belong to Customer B.

Referring to FIG. **3**, a logical mapping table of VRFs and associated RTs is shown. The logical mapping table includes row entries of full mesh **310**, hub and spoke with two VRFs **312**, hub and spoke with one VRF **314**, and a central service row **316**. The column entries include the assigned RTs and VRFs **330**, **332**, **334**, and a comments column **306**.

Referring to FIG. **4**, VRF and RT mapping tables **440**, **450**, and **460** for multiple PEs are shown. A first table **540** for PE**1** includes a plurality of VPN row elements **402**-**412**, a VRF indicator row **414**, and a plurality of CE columns **422**-**430**. The table **440** also includes a topology indication column **420**. As shown, one of the VRFs, VRF_**4** labeled **432** is shared by two CEs, CE**12** in column **428** and CE**13** in column **430**. By providing for a shared VRF, the number of used VRFs for the desired VPN topology is beneficially reduced and for a large network provides for reduced VRF deployment costs. Thus, the resulting set of VRFs is a reduced size set. In accordance with the VRF generation rules, RTs are assigned for each CE based on its topology requirement in Table 1 and the RT generation rules in Table 2. If multiple CEs share the same RT set, such as the last CE**12** and CE**13**, then they share one VRF. Generally, each VRF owns all the RTs in its column, However, all the CE members of one full mesh VPN belong to another full mesh VPN, which means that one VPN is the subset of another VPN. Therefore, the corresponding VRF may not need the RT of the subset VPN if it makes no difference to the customers.

Dualhoming requirement can also be handled with respect to Table 1. There are 3 common scenarios for dualhoming:

1. Two CEs connecting to two PE by two physical or logical links. This scenario can be handled by Table 1 natively.
2. One CE connecting to two PE by two physical or logical links. Two columns for each CE are used. Part 1 for these two columns are the same. There may be the same or different L2 or L3 requirement in part 2, one IP interface and IP address/mask on each PE in part 3.
3. One CE connecting to one PE by two parallel physical links or logical links. Two columns for each CE are used. Part 1 for these two columns are the same. There may be the same or different L2 or L3 requirement in part 2, operation needs to assign two IP interfaces and two IP addresses/masks on the PE.

The "Site" concept in industry standard RFC2547bis can also be easily integrated into Table 1 by adding a row named "Site" in Table 1 which tells which site each CE belong to. If a customer wants the traffic between two or more CEs go through its private network only, which means that customer does not rely on the SP network as both primary and backup connection for these CEs, these CEs should be assigned to one site. The same SOO (Site of Origin) should be configured for the CE-PE interfaces on PEs to avoid routing loop if EBGP is used as the CE-PE routing protocol.

Referring to FIG. **5**, a sample operations system for implementing the disclosed provisioning procedure is shown. The operations system includes a computer system **502** with a memory **504**. The computer system **502** is coupled to a backbone network **520**, such as a MPLS network. The computer system **502** has an input/output device **510** and a terminal **506** with a display **508** used to interface to network operations personnel. Computer software that can receive an operator input table and can perform automated provisioning procedures to deploy VRF and RT assignments for network elements within the backbone network **520** can be disposed in the memory **504** and executed by the computer system **502**. An example of a suitable computer system **502** is a commercially available personal computer or workstation.

Referring to FIG. **6**, a particular embodiment of a method of provisioning a network is illustrated. A high level description of a network topology, such as the table **102** of FIG. **1**, is received, at **602**. A set of provisioning rules is applied to the topology of the network to produce a plurality of route targets (RTs) associated with virtual private networks to be assigned to the network, at **604**. A set of route targets from the plurality of route targets is grouped with respect to each customer edge router (CE) within the network to form a group of route target sets, at **606**. Duplicate sets of route targets are removed from the group of route targets to form a reduced size set of route targets, at **608**. Each set of route targets in the reduced size set of route targets is assigned to a virtual routing and forwarding (VRF) element all the CEs with the same RT set on one PE should share one VRF, at **610**. By reducing the number of route targets and by sharing VRFs, less network resources are consumed by the desired network topology. An output file is generated, at **612**, that includes output data that identifies each of the VRFs and the associated route targets assigned to each of the VRFs. The output file may be deployed to physical network equipment to complete the provisioning process.

Referring to FIG. **7**, another particular embodiment of a method of provisioning is illustrated. A set of rules is provided regarding assignment of route targets for each of a plurality of virtual private networks, at **702**. Provider edge routers (PE) of a backbone network are configured, at **704**. Customer edge routers (CE) are configured, at **706**. Each of the CE nodes has a relationship link to at least one of the PE elements. Route targets are assigned to each of the CE nodes based on topology requirements of the backbone network and based on the set of rules, at **708**. An example of the set of rules is the table of rules illustrated in FIG. **3**. Each of the CE nodes and VRFs are configured with respect to the corresponding PE elements to form a logical network topology, at **710**. The logical topology may be converted into an output file that is deployed in physical router equipment, to thereby provision such equipment.

Referring to FIG. **8**, a method of provisioning for a modified network topology is shown. A particular site or a particular VPN is added, deleted, or modified, at **802**. This modification results in a changed topology. The operations table, such as the illustrated operator input table **102**, is updated to correspond to the modified topology including updated VPNs, at **804**. For example, a customer may add, delete, or change a desired VPN. The automated provisioning method (see system **130** of FIG. **1**) is re-executed using the updated operations table as its input to determine whether any changes are needed to VRFs or RTs for the network, at **806**. If changes are needed, a necessary set of VRF/RT commands to deployed network equipment is provided to provision the modified topology, at **808**. Thus, a method of automatically provisioning a desired VPN network that can also handle modifications to the desired VPN topology with reduced reliance on operator technical ability has been disclosed.

As a particular example, when adding a new site to one or multiple existing VPNs, the provisioning steps described above with respect to FIG. **1** are repeated with adding the new CE column and the provision system **130** will automatically decide if a new VRF need to be added for this new site or just let this new CE join an existing VRF. When delete a site from existing VPN services, the provisioning steps described with respect to FIG. **1** are repeated with deleting the CE and the provision system **130** will automatically decide if the CE attached VRF need to be deleted or not. When changing a VPN topology, the above described steps are repeated with modified VPN topology and the role of each CE in this topology, and the provision system **130** will automatically determine the VRFs and associated RTs. When adding a new VPN, the above described provisioning steps are repeated with modified VPN topology and the role of each CE in this topology, and the provision system will automatically decide the VRFs and associated RTs. When deleting a existing VPN, the provisioning steps are repeated with deleting the VPN and the provision system will automatically decide the VRFs and associated RTs.

The disclosed provisioning system may feed the information of how many VRFs need to be used for each customer into billing system to easily support billing of MPLS/VPN services based on both the cost of VRFs as well as access costs since VRF is a limited resource in PE routers. The disclosed method and system provides a new service provision interface that allows operator use without requiring many of the specific technical network details, such as VRF, RT, SOO, route redistribution, etc. Further, the translation from a customer's requirements into technical network configuration commands are handled using an automated method that is transparent to the operator. The disclosed service provisioning method allows provisioning in an efficient manner using an overall system view instead of a link by link method.

The above disclosed subject matter is to be considered illustrative, and not restrictive, and the appended claims are intended to cover all such modifications, enhancements, and other embodiments which fall within the true spirit and scope of the present invention. Thus, to the maximum extent allowed by law, the scope of the present invention is to be determined by the broadest permissible interpretation of the following claims and their equivalents, and shall not be restricted or limited by the foregoing detailed description.

What is claimed is:

1. An automated method of provisioning a virtual private network, the method comprising:

receiving, from an operator, data comprising a plurality of data entries, a first set of the plurality of data entries identifying customer edge (CE) routers, a second set of the plurality of data entries identifying provider edge (PE) routers corresponding to each of the customer edge routers, and a third set of the plurality of data entries identifying a topology type of a virtual private network (VPN);

applying a set of rules to the data to produce a plurality of route targets stored in a memory and associated with virtual private networks to be assigned to the network;

grouping a set of route targets from the plurality of route targets with respect to each customer equipment node within the network to form a group of route target sets;

removing duplicate route target sets from the group of route target sets to form a reduced size of route target sets based on the route targets between duplicate route target sets being the same;

assigning each set of route targets (RT) in the reduced size set of route targets to a virtual routing and forwarding (VRF) element and all the CEs with the same RT set on one PE share one VRF; and

generating an output file including output data that identifies each of the VRFs and the associated route targets assigned to each of the VRFs;

wherein the memory includes a virtual routing and forwarding (VRF) element to route target data mapping for each of a plurality of provider edge routers (PEs) and wherein all of the customer edge routers (CEs) with the same route target (RT) set on one PE share one VRF.

2. The method of claim **1**, further comprising communicating the output data to a network element within the network.

3. The method of claim **1**, further comprising communicating the output file to a system having a display.

4. The method of claim **1**, further comprising displaying a report based on the output data.

5. The method of claim **1**, wherein the network element is a VRF component within a data router and wherein the topology type is selected from full mesh, central service and hub and spoke topology types.

6. The method of claim **1**, wherein the network is a multi protocol label switching (MPLS) network and wherein the plurality of data entries has a table format wherein the rows are virtual private networks, a set of columns are defined by the customer edge routers and the table entries include the associated provider edge routes.

7. A computer network operations system comprising:

a terminal having a display portion;

a data input device to receive input from a user;

a computer system having a memory and a processor, the computer system coupled to the terminal and to the data input device;

wherein the display portion of the terminal provides an input screen having a data format configured to prompt the user to provide high-level network topology data via the data input device, the high-level network topology data including a plurality of data entries, a first set of the plurality of data entries identifying customer edge (CE) routers, a second set of the plurality of data entries identifying provider edge (PE) routers corresponding to each of the customer edge routers, and a third set of the plurality of data entries identifying a topology type of a virtual private network (VPN);

wherein the computer system converts the high-level network topology data into a set of route targets to be assigned to virtual routing and forwarding elements, the set of route targets stored in the memory, wherein the memory includes a virtual routing and forwarding (VRF) element to route target data mapping for each of

a plurality of provider edge routers (PEs) and wherein all of the customer edge routers (CEs) with the same route target (RT) set on one PE share one VRF.

8. The computer network operations system of claim **7**, wherein the backbone data network comprises a multi protocol label switching (MPLS) network.

9. A method of provisioning a virtual private network service, the method comprising:

providing a set of rules regarding assignment of route targets stored in a memory for each of a plurality of virtual private networks;

configuring provider edge routers (PEs) of a backbone network;

configuring customer edge routers (CEs), each of the customer edge routers having a relationship link to at least one of the provider edge routers;

assigning route targets to each of the customer edge routers based on topology requirements of the backbone network and based on the set of rules, wherein route targets are grouped into sets and duplicate sets of route targets are removed based on the route targets between duplicate sets of route targets being the same, and wherein the topology requirements comprise a plurality of data entries, a first set of the plurality of data entries identifying customer edge (CE) routers, a second set of the plurality of data entries identifying provider edge (PE) routers corresponding to each of the customer edge routers, and a third set of the plurality of data entries identifying a topology type of a virtual private network (VPN); and

configuring each of the VRFs and RTs on the corresponding provider edge routers to form a logical topology;

wherein the memory further includes a virtual routing and forwarding (VRF) element to route target data mapping for each of a plurality of provider edge routers (PEs) and wherein all of the customer edge routers (CEs) with the same route target (RT) set on one PE share one VRF.

10. The method of claim **9**, further comprising adding an additional CE to one of the plurality of virtual private networks to form a modified logical topology.

11. The method of claim **10**, wherein the modified logical topology has a new VPN with respect to the logical topology.

12. The method of claim **9**, further comprising deleting one of the CEs of one of the plurality of virtual private networks to form a modified logical topology.

13. The method of claim **12**, wherein the modified logical topology has a removed VPN with respect to the logical topology.

14. The method of claim **9**, further comprising communicating the logical topology to a remote computer system wherein the logical topology includes a modified topology type, the modified topology type changed from Hub and Spoke to a full mesh arrangement.

15. The method of claim **14**, further comprising displaying a graphical representation of the logical topology to a user of a terminal coupled to the computer system.

16. The method of claim **15**, wherein the terminal is an operations terminal of a network management system, the network management system tied to the backbone network.

17. The method of claim **9**, wherein the network element is a VRF component within a data router and wherein the topology type is selected from full mesh, central service and hub and spoke topology types.

18. The method of claim **9**, wherein the network is a MPLS network and wherein the plurality of data entries has a table format wherein the rows are virtual private networks, a column includes the network topology type, a set of columns are defined by the CEs and the table entries include the associated PEs.

19. A system to monitor a backbone network, the system comprising:

a terminal having a display portion;

a data input device to receive input from a user;

a computer system having a memory and a processor, the computer system coupled to the terminal and to the data input device;

wherein the display portion of the terminal provides an input screen having a data format configured to prompt the user to provide high-level network topology data via the data input device, the backbone network including a plurality of CEs, a plurality of PEs, a plurality of virtual routing and forwarding components, a plurality of route targets, a plurality of virtual private networks and wherein the high level network topology data identifies the CEs, the PEs within each of the virtual private networks, and a plurality of data entries, a first set of the plurality of data entries identifying customer edge (CE) routers, a second set of the plurality of data entries identifying provider edge (PE) routers corresponding to each of the customer edge routers, and a third set of the plurality of data entries identifying a topology type of a virtual private network (VPN);

wherein the computer system includes a set of rules to convert the high-level network topology data into a set of route targets to be assigned to virtual routing and forwarding (VRF) elements, the set of route targets stored in the memory; and

wherein the memory further includes a VRF to route target data mapping for each of a plurality of PEs and wherein the CEs with the same RT set on one PE share one VRF.

20. The system of claim **19**, wherein the set of rules includes a first set of rules to handle route target to VRF mapping based on a meshed topology and a second set of rules to handle route targets to VRF mapping for a hub and spoke topology and a third set of rules to handle route targets to VRF mapping for a central service topology.

21. The system of claim **20**, wherein the second set of rules includes an import rule and an export rule.

22. The system of claim **21**, wherein the second set of rules applies to two route targets for a particular VRF component.

23. The system of claim **19**, wherein the memory further stores a software program to generate and deploy the set of route targets into a physical network router node.

* * * * *