US 20130299185A1

(19) United States

(12) Patent Application Publication

(10) Pub. No.: US 2013/0299185 A1

(43) Pub. Date: Nov. 14, 2013

Xu et al.

(54) **DISINTEGRABLE METAL CONE, PROCESS OF MAKING, AND USE OF THE SAME**

(75) Inventors: **Zhiyue Xu**, Cypress, TX (US); **YingQing Xu**, Tomball, TX (US); **Gregory Lee Hern**, Porter, TX (US); **Bennett M. Richard**, Kingwood, TX (US)

(73) Assignee: **BAKER HUGHES INCORPORATED**, Houston, TX (US)

(21) Appl. No.: **13/466,329**

(22) Filed: **May 8, 2012**

Publication Classification

(51) **Int. Cl.**

E21B 43/10	(2006.01)
E21B 33/12	(2006.01)
B22F 3/24	(2006.01)

(52) **U.S. Cl.**

CPC ***E21B 43/106*** (2013.01); ***B22F 3/24*** (2013.01); ***E21B 33/12*** (2013.01)

USPC **166/376**; 419/5; 166/242.6; 166/192

(57) **ABSTRACT**

A frustoconical member includes a metal composite that has a cellular nanomatrix comprising a metallic nanomatrix material; a metal matrix disposed in the cellular nanomatrix; and a first frustoconical portion. A process of making the frustoconical member includes combining a metal matrix powder, a disintegration agent, and metal nanomatrix material to form a composition; compacting the composition to form a compacted composition; sintering the compacted composition; and pressing the sintered composition to form the frustoconical member having a tapered portion on an outer surface of the frustoconical member. The frustoconical member can be used by contacting a frustoconical portion of the frustoconical member to a tapered surface of an article; applying pressure to the frustoconical member; urging the frustoconical member in a direction relative to the article to expand a radial dimension of the article; and contacting the frustoconical member with a fluid to disintegrate the frustoconical member.

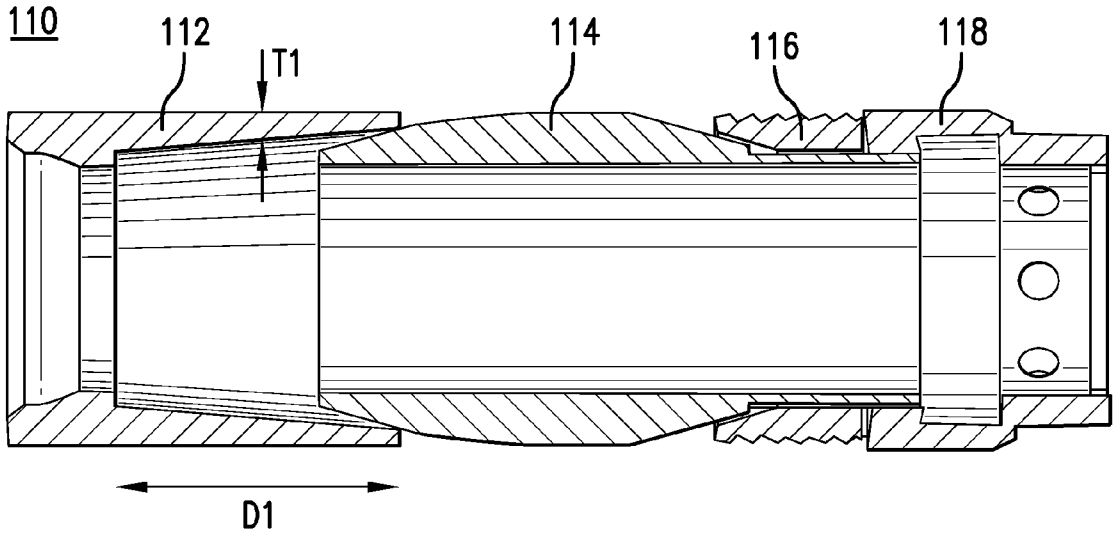

Chongqin Yanmei Technology Co., Ltd. EX1007

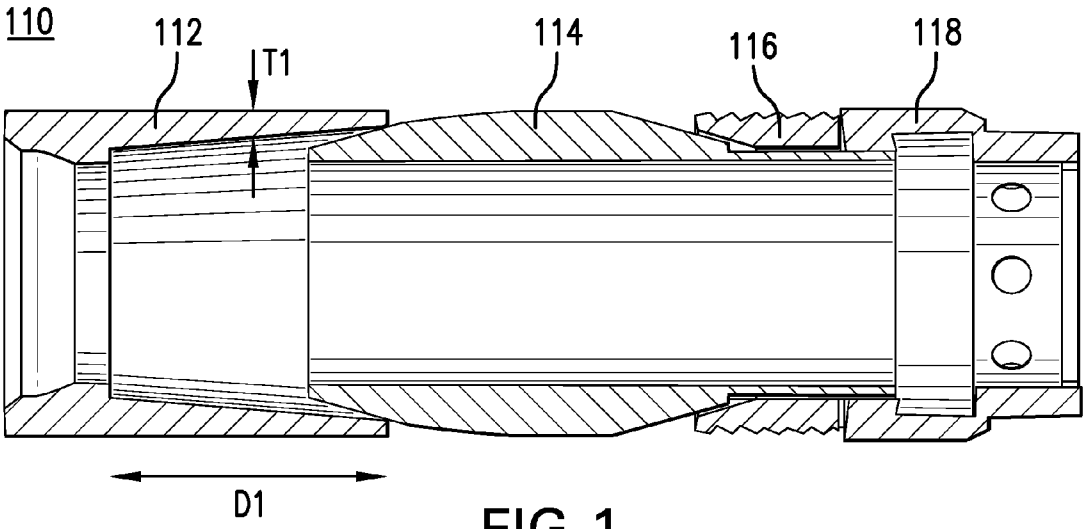

FIG. 1

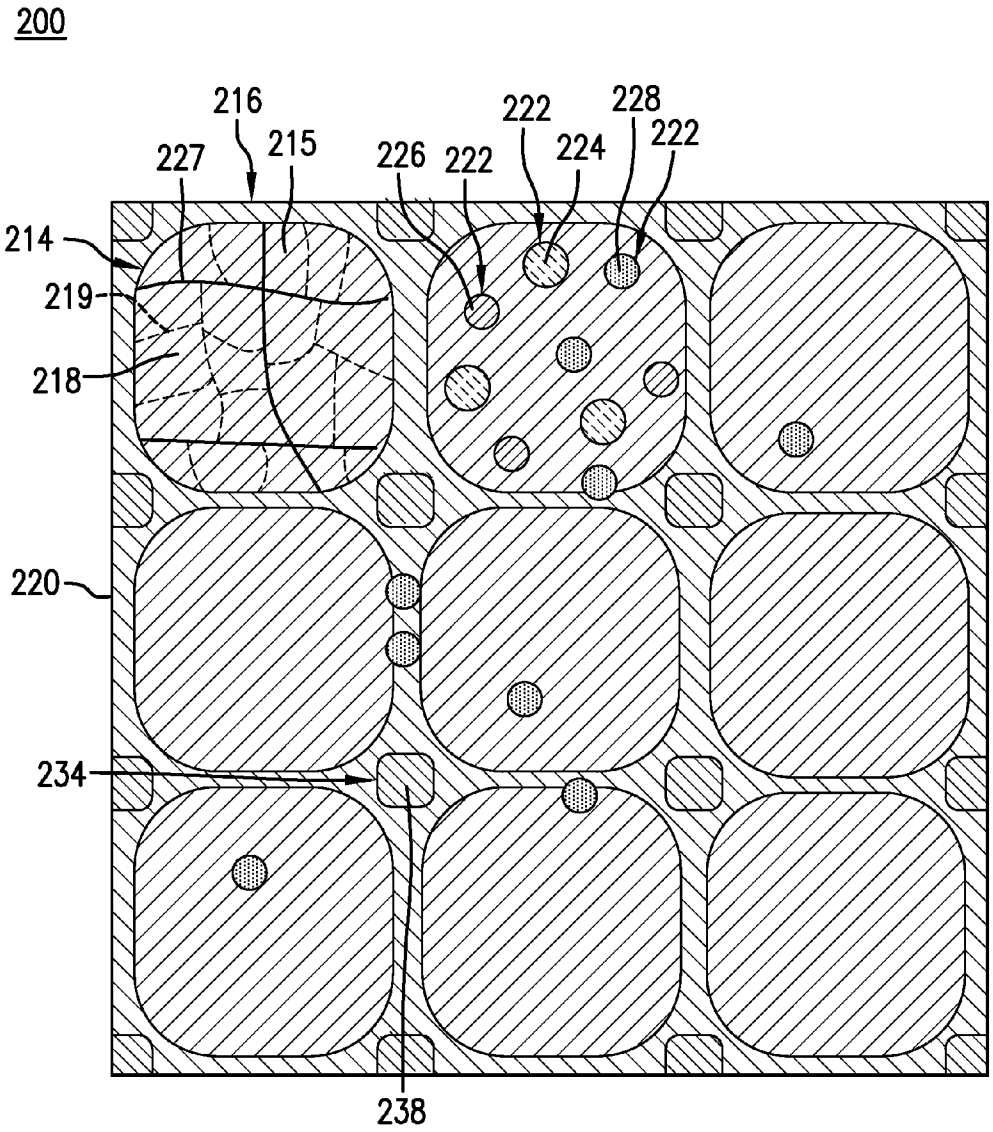

FIG.2

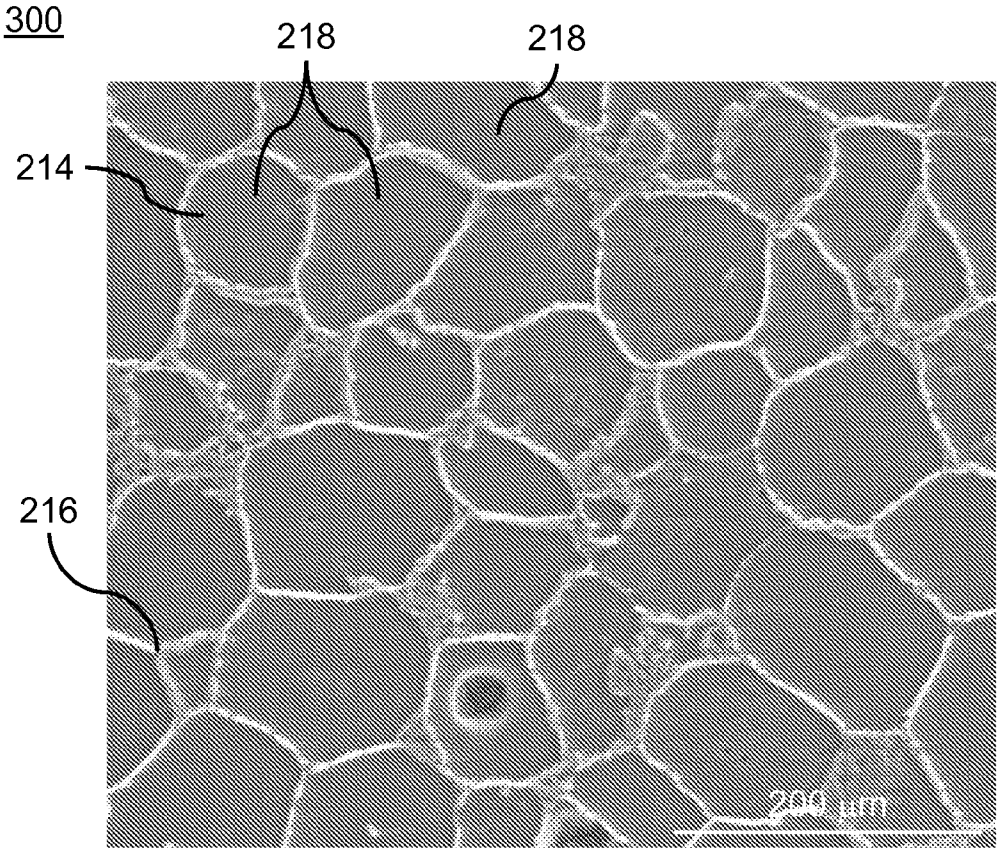

FIG.3

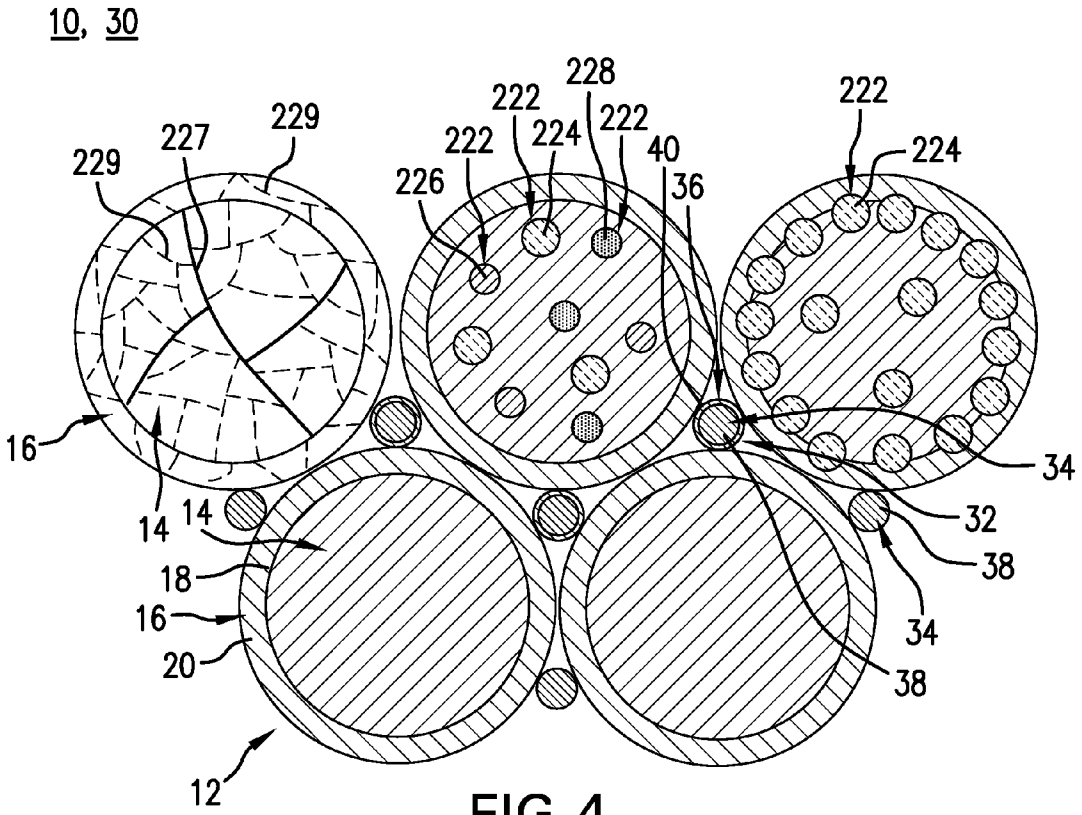
10, 30
229
227
229
228
222
222
224
222
226
40
36
222
224
16
14
14
18
16
20
12
34
32
38
34
38

FIG.4

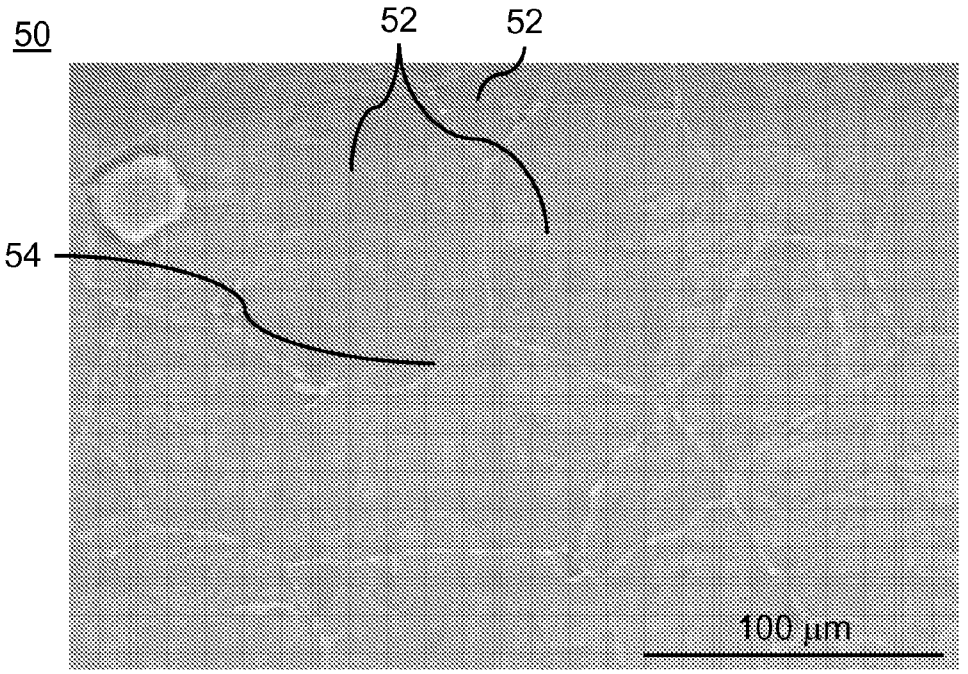

FIG.5A

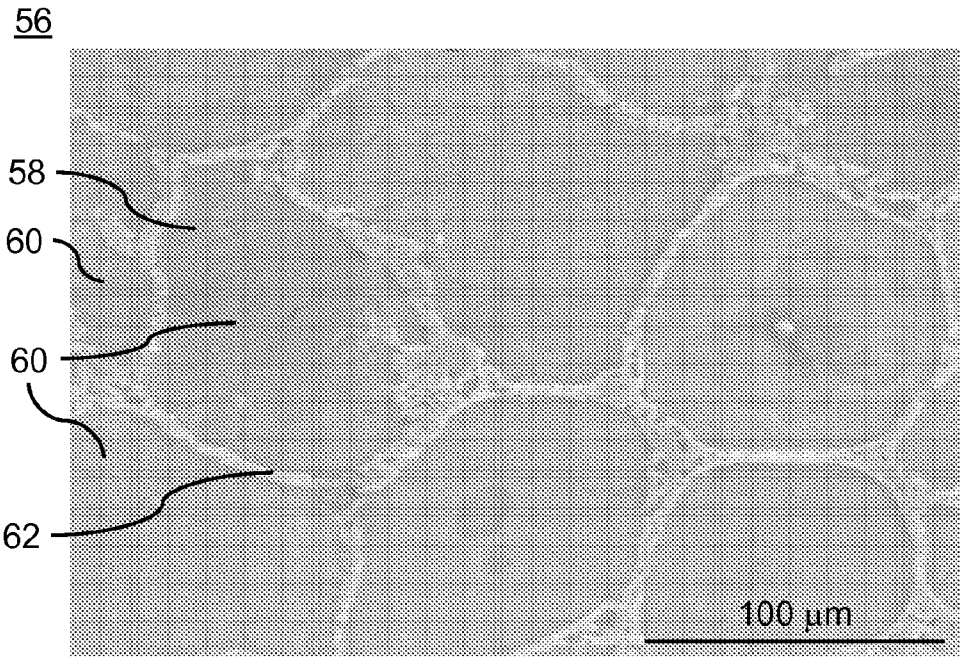

FIG.5B

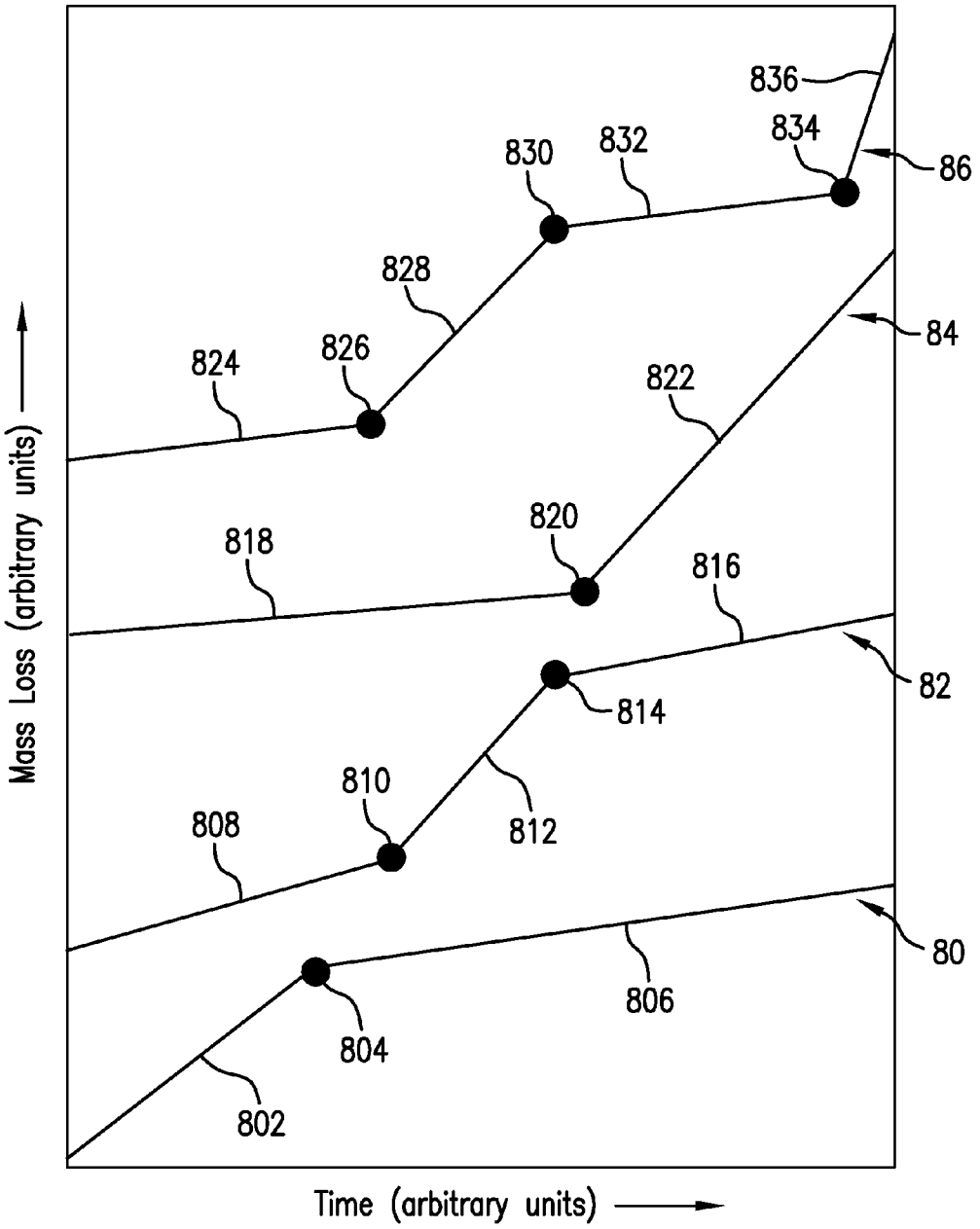
836
834
832
830
86
828
84
824
826
822
820
818
816
82
814
810
812
808
80
806
804
802
Mass Loss (arbitrary units)
Time (arbitrary units)

FIG.6

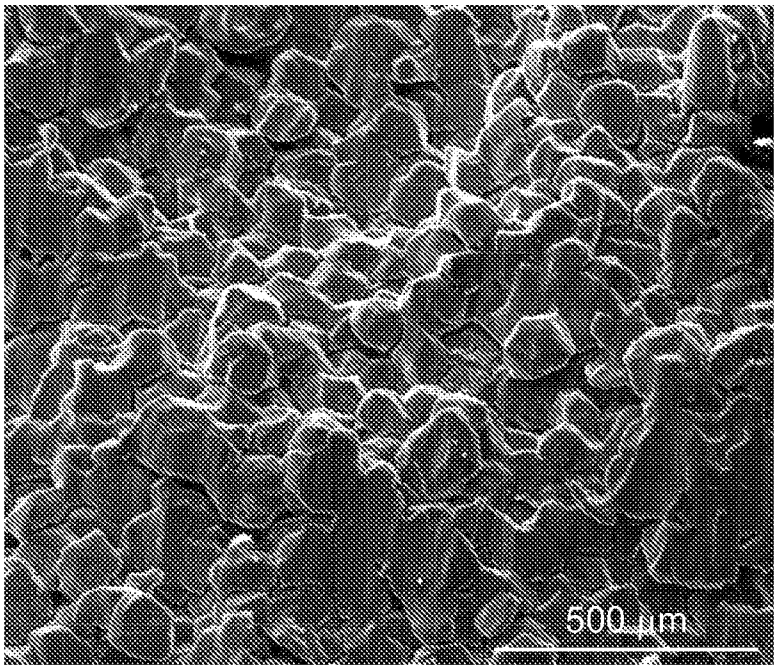

FIG.7A

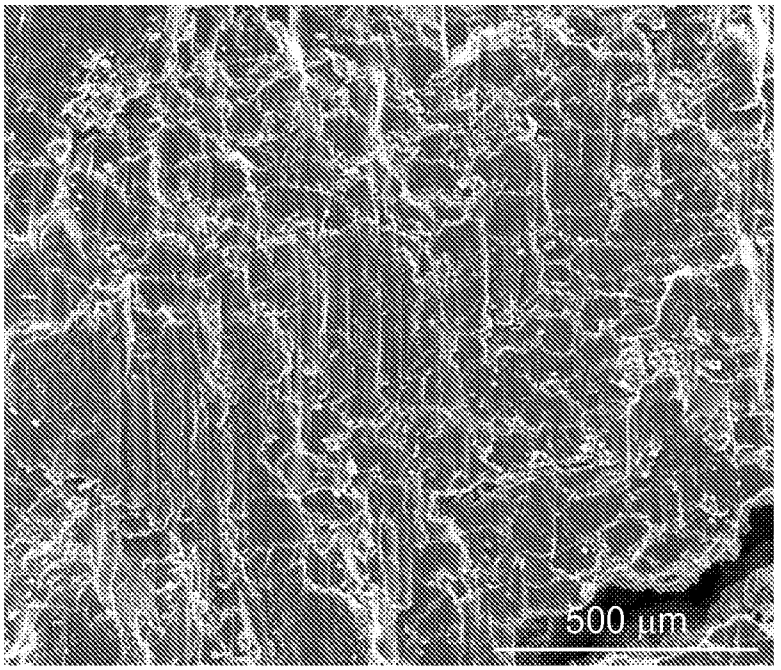

FIG.7B

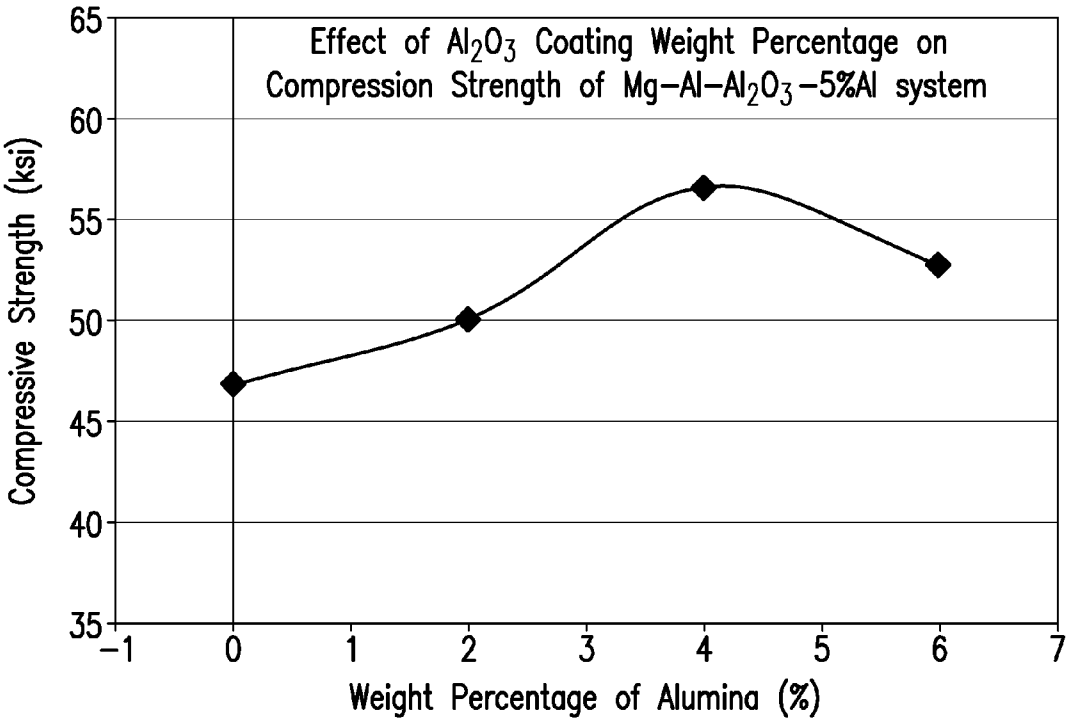
Effect of Al_2O_3 Coating Weight Percentage on
Compression Strength of Mg–Al–Al_2O_3–5%Al system
Compressive Strength (ksi)
65
60
55
50
45
40
35
−1
0
1
2
3
4
5
6
7
Weight Percentage of Alumina (%)

FIG.8

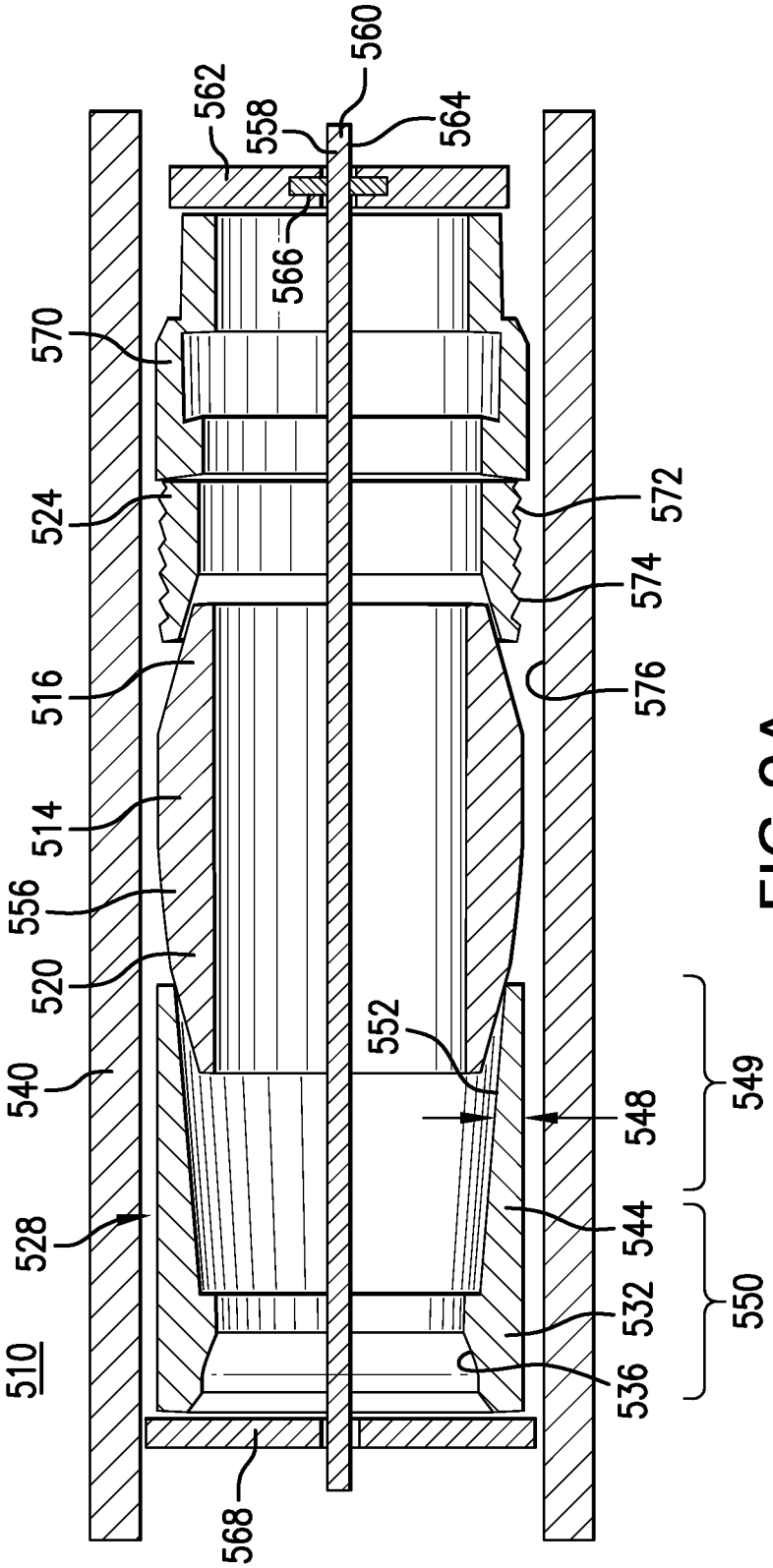
560
562
558
564
566
570
524
572
574
516
576
514
556
520
552
540
548
549
528
544
550
532
510
536
568

FIG.9A

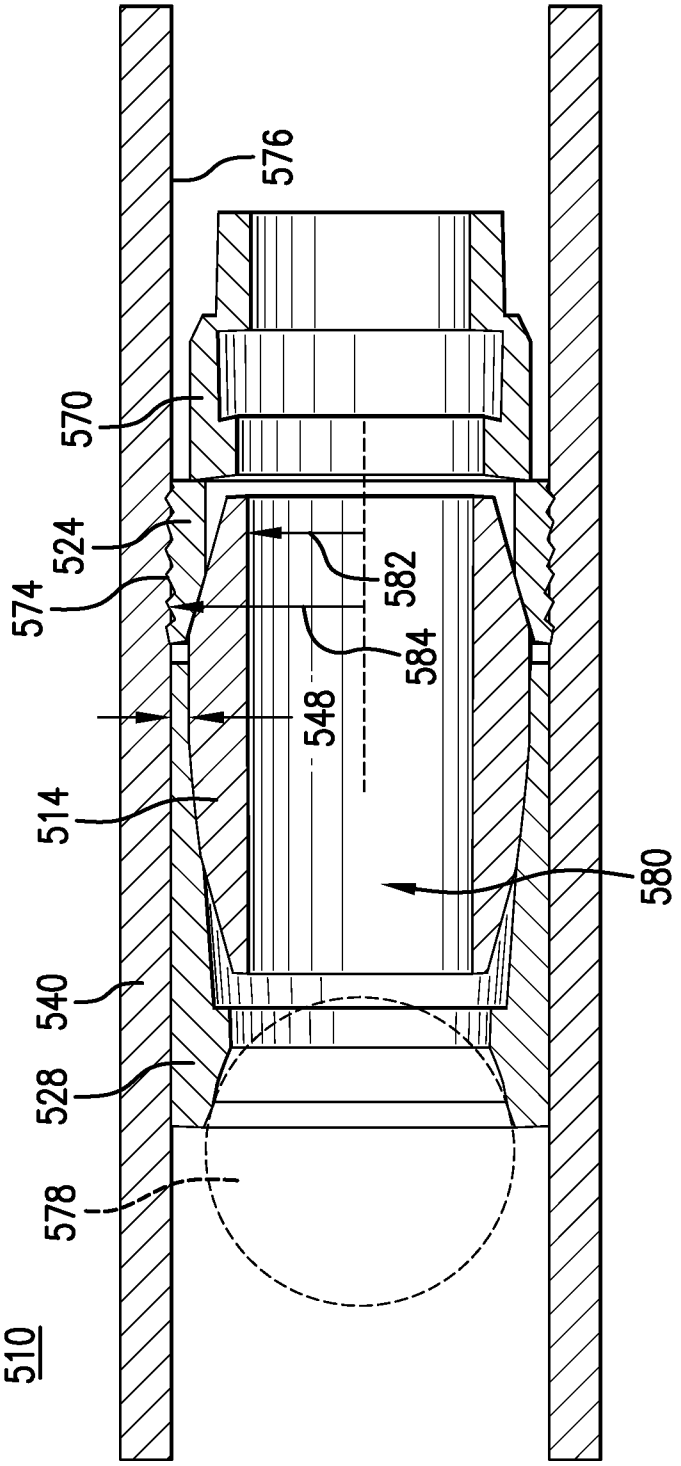

FIG.9B

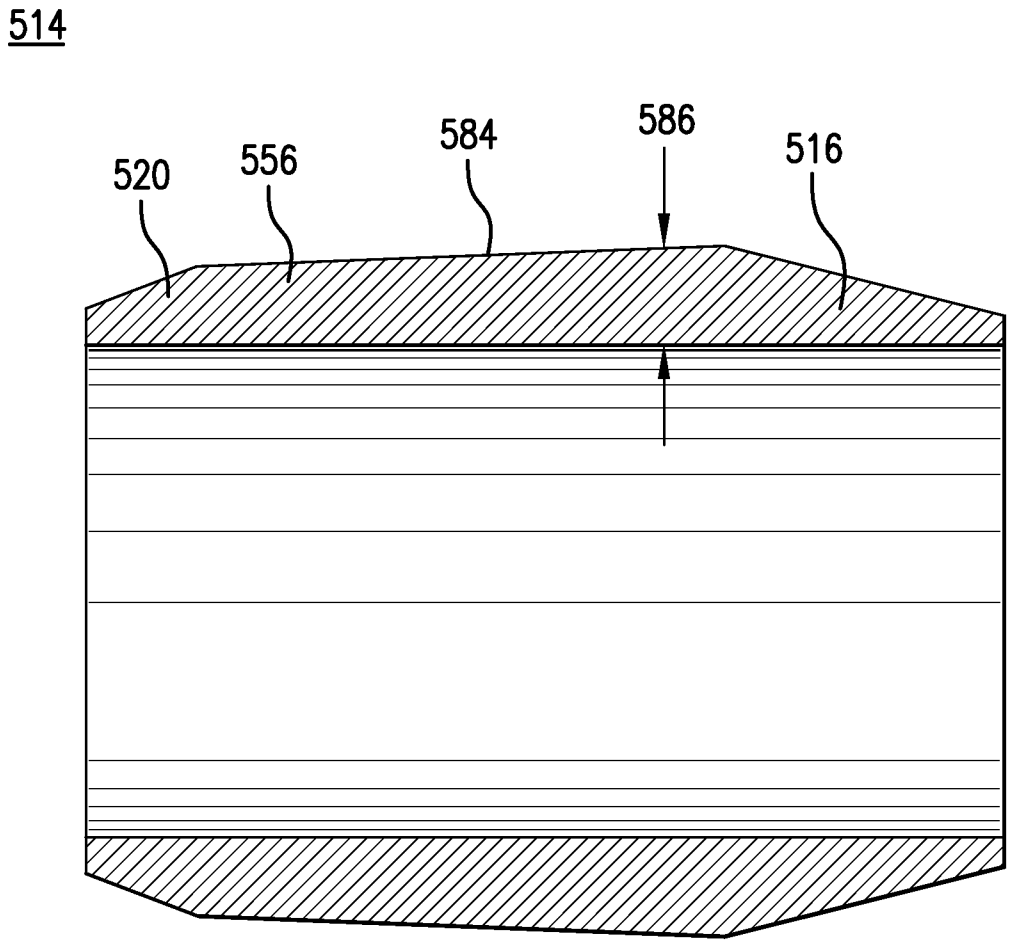

FIG.10

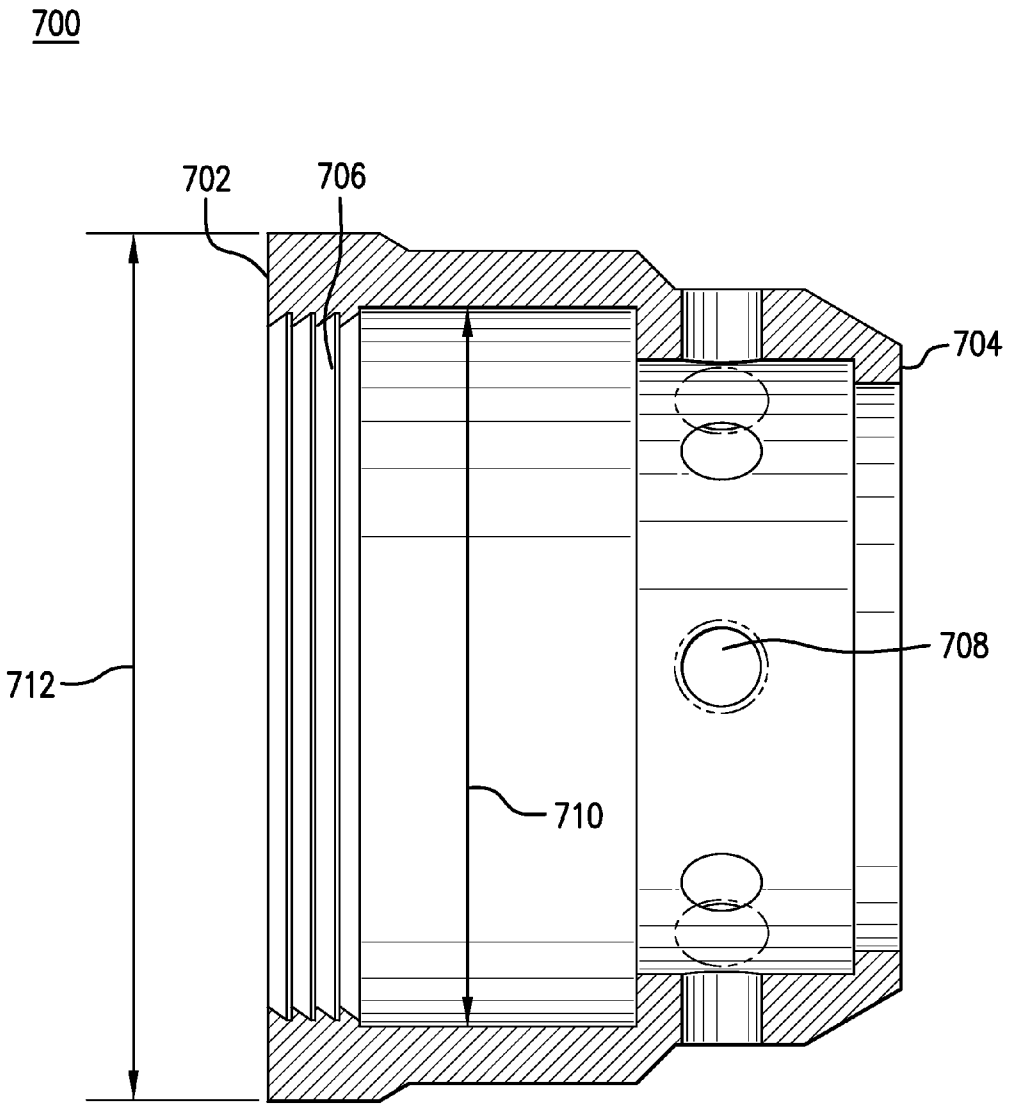

FIG.11

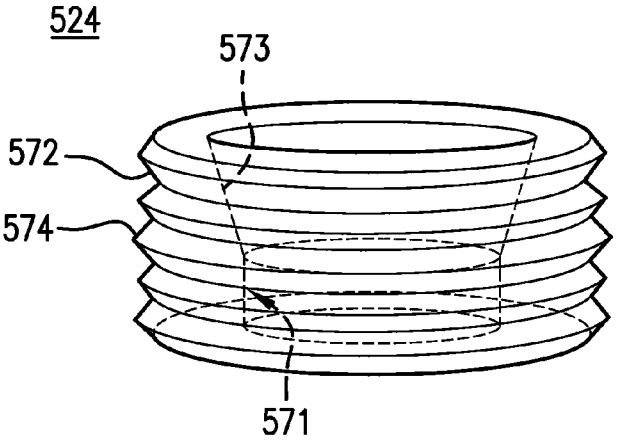

FIG.12A

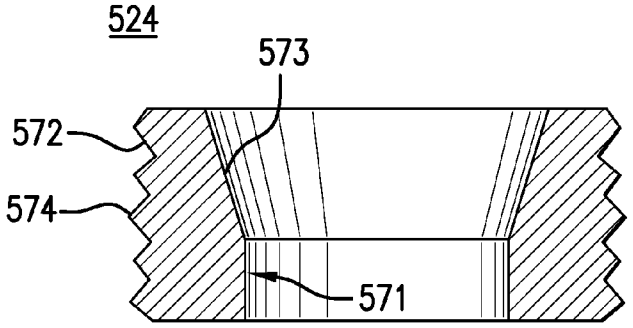

FIG.12B

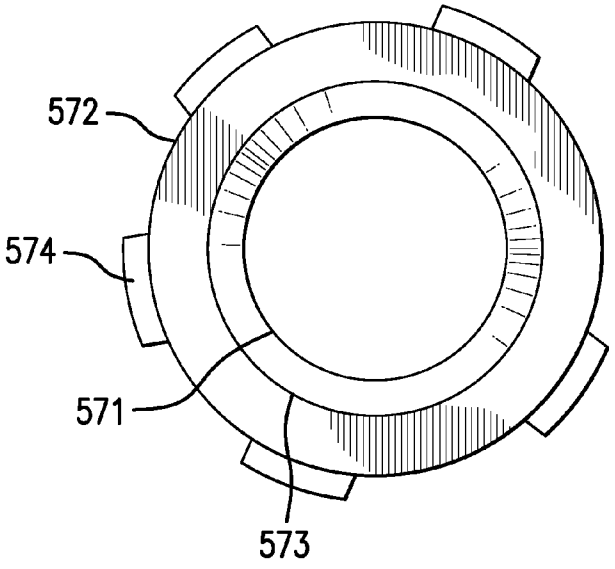

FIG.12C

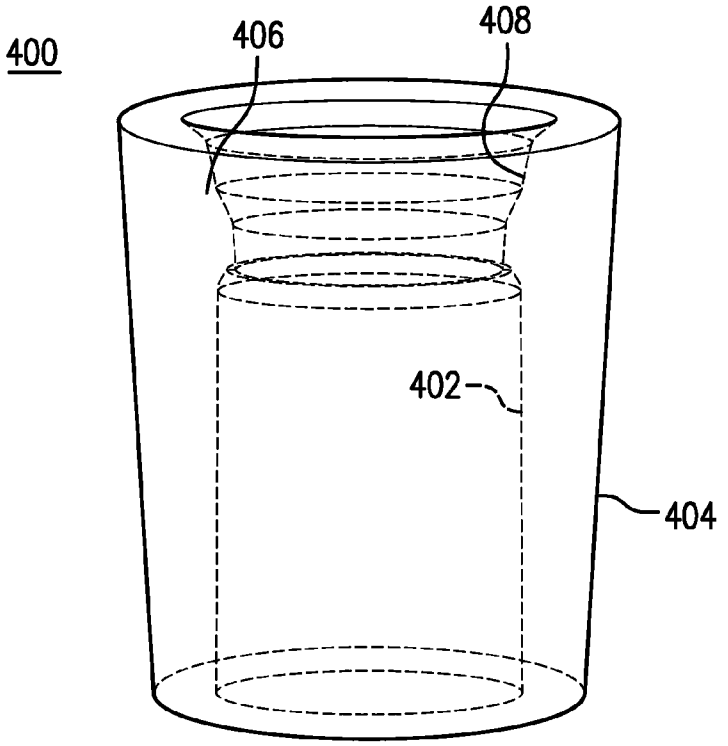

FIG.13A

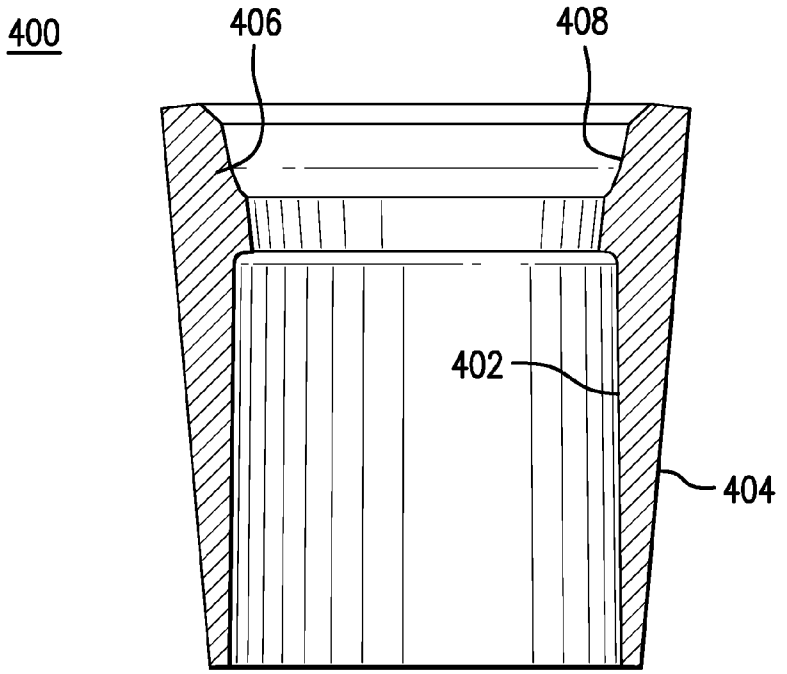

FIG.13B

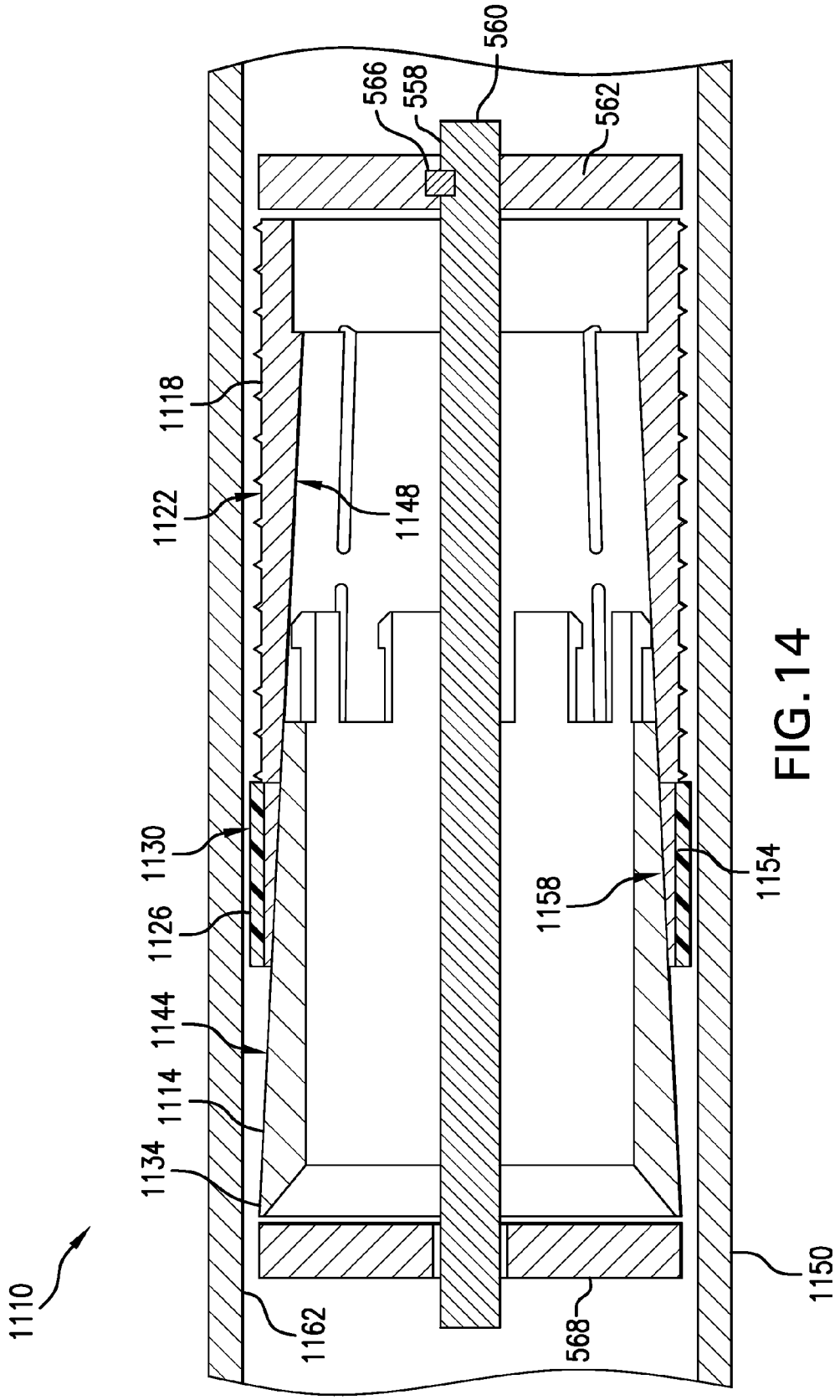
1110
1134
1114
1144
1126
1130
1122
1118
1162
1148
566
558
560
562
568
1158
1154
1150

FIG. 14

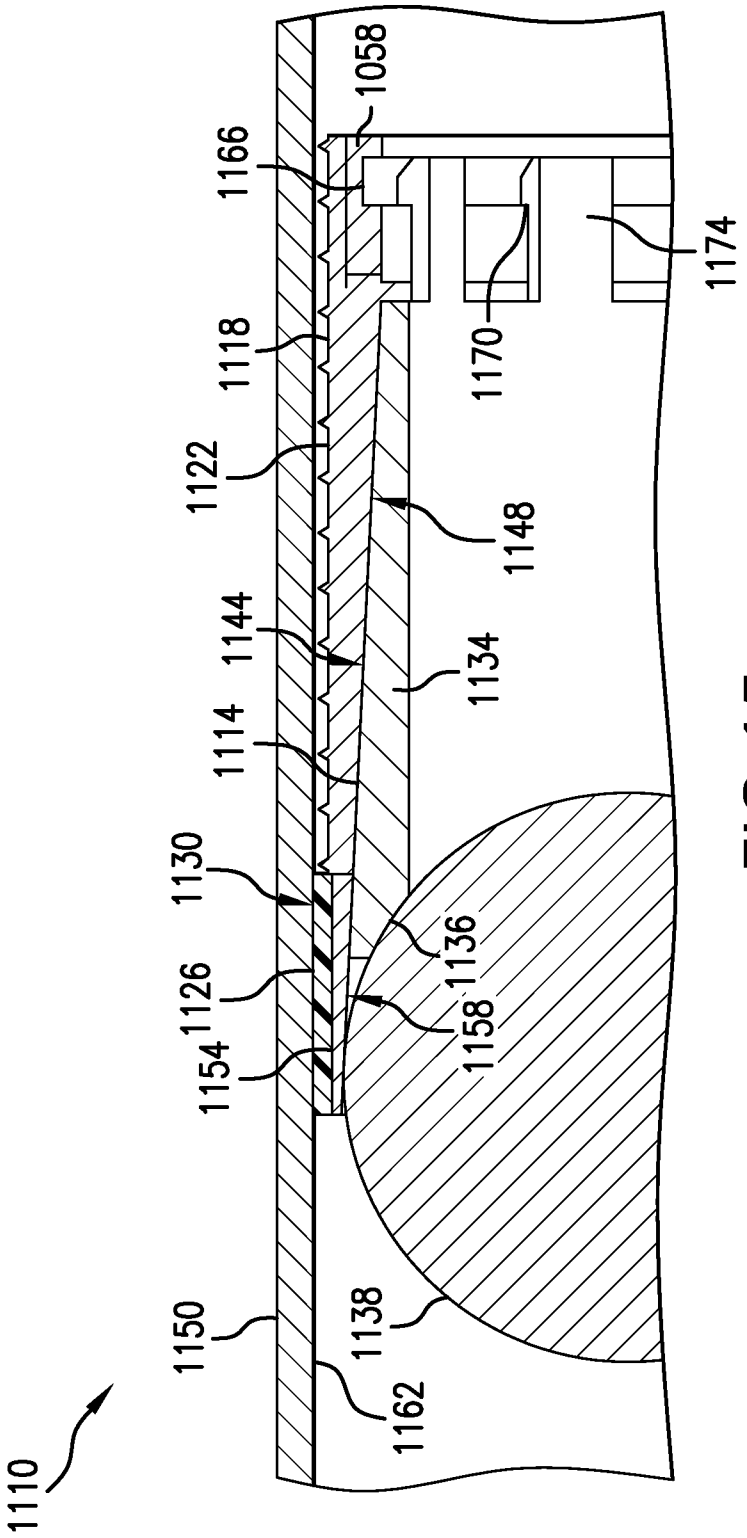
1110
1150
1154
1126
1130
1114
1144
1122
1118
1166
1162
1138
1158
1136
1134
1148
1170
1174
1058

FIG. 15

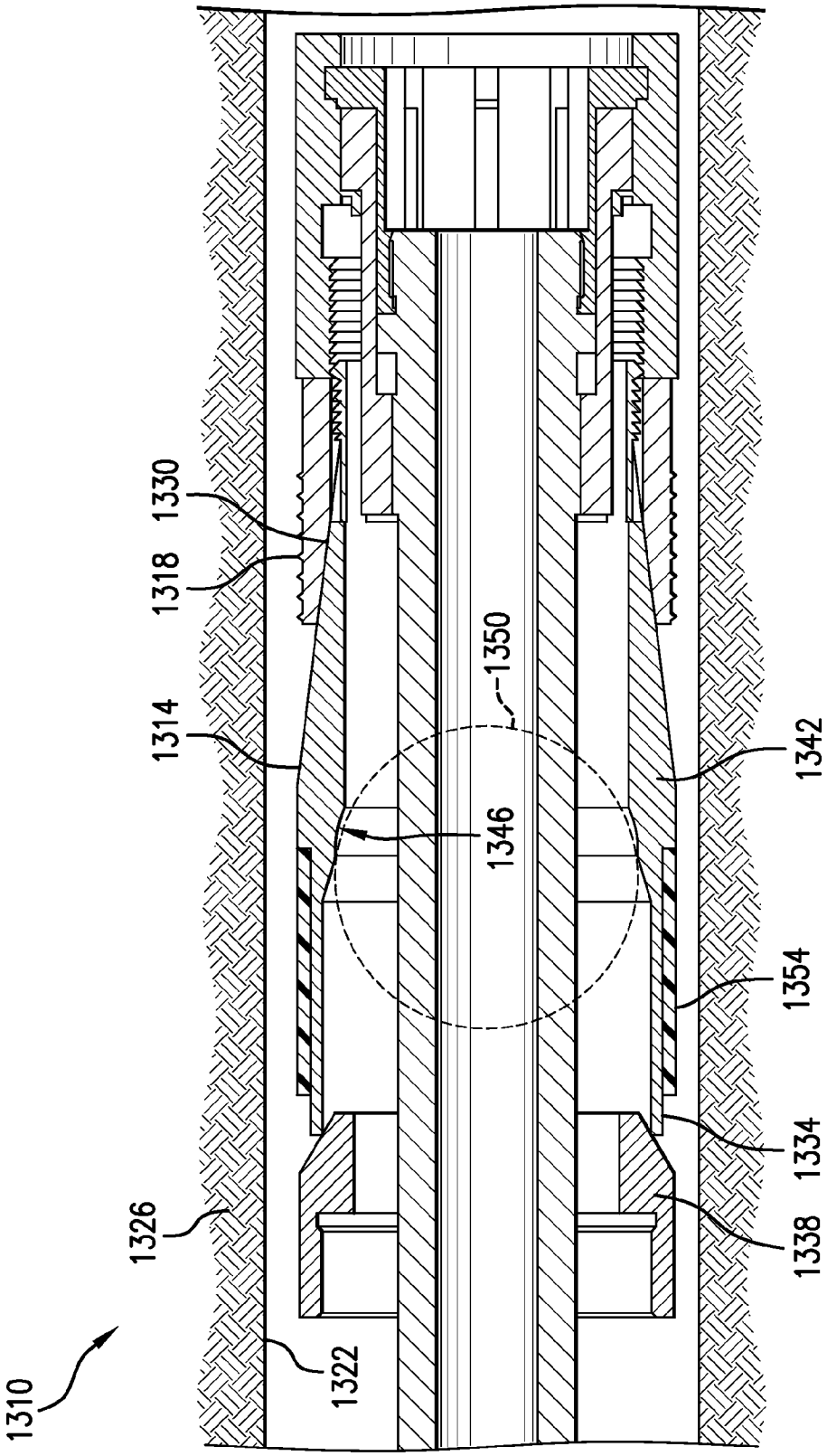

FIG. 16

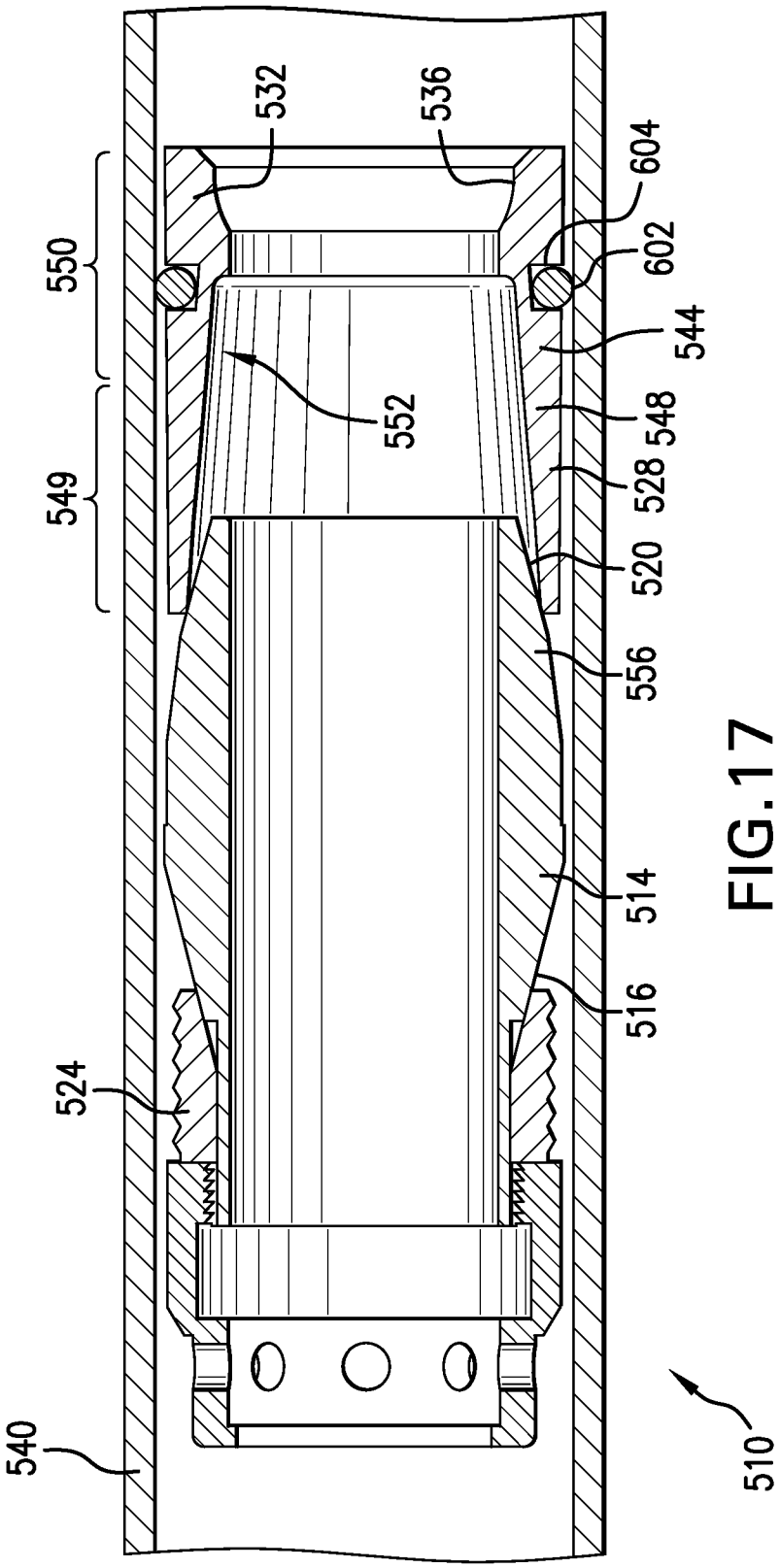
532
536
604
602
550
544
552
548
549
528
520
556
514
516
524
540
510

FIG. 17

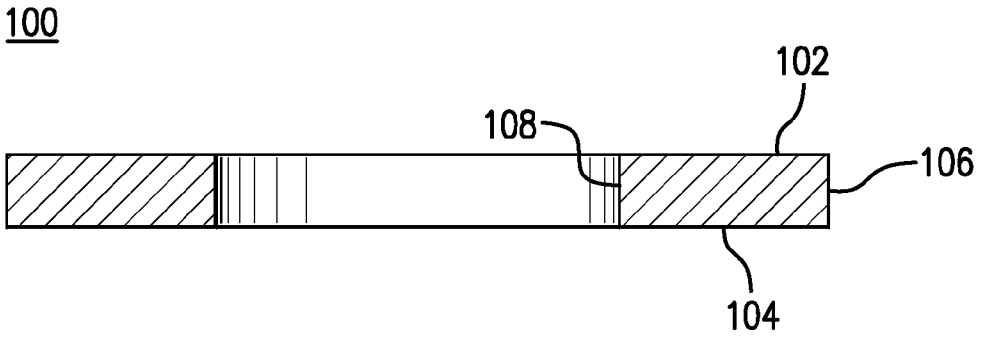

FIG. 18A

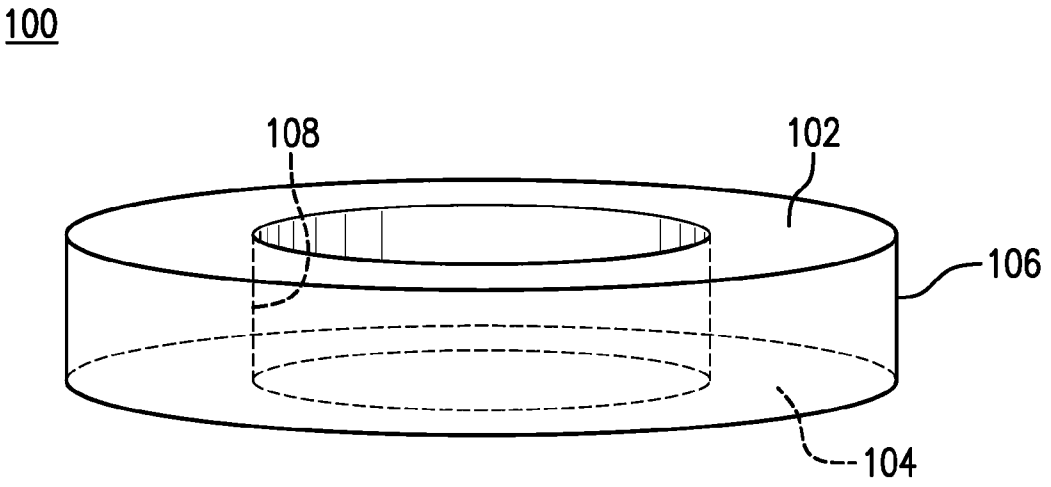

FIG. 18B

DISINTEGRABLE METAL CONE, PROCESS OF MAKING, AND USE OF THE SAME

BACKGROUND

[0001] Downhole constructions including oil and natural gas wells, CO_2 sequestration boreholes, etc. often utilize borehole components or tools that, due to their function, are only required to have limited service lives that are considerably less than the service life of the well. After a component or tool service function is complete, it must be removed or disposed of in order to recover the original size of the fluid pathway for use, including hydrocarbon production, CO_2 capture or sequestration, etc. Disposal of components or tools can be accomplished by milling or drilling the component or tool out of the borehole, which is generally a time consuming and expensive operation. The industry is always receptive to new systems, materials, and methods that eliminate removal of a component or tool from a borehole without such milling and drilling operations.

BRIEF DESCRIPTION

[0002] Disclosed herein is a frustoconical member comprising: a metal composite including: a cellular nanomatrix comprising a metallic nanomatrix material; a metal matrix disposed in the cellular nanomatrix; and a first frustoconical portion.

[0003] Also disclosed is a process of making a frustoconical member, the process comprising: combining a metal matrix powder, a disintegration agent, and metal nanomatrix material to form a composition; compacting the composition to form a compacted composition; sintering the compacted composition; and pressing the sintered composition to form the frustoconical member having a tapered portion on an outer surface of the frustoconical member.

[0004] Further disclosed is a method of using a frustoconical member, the method comprising: contacting a frustoconical portion of the frustoconical member to a tapered surface of an article; applying pressure to the frustoconical member; urging the frustoconical member in a direction relative to the article to expand a radial dimension of the article; and contacting the frustoconical member with a fluid to disintegrate the frustoconical member.

BRIEF DESCRIPTION OF THE DRAWINGS

[0005] The following descriptions should not be considered limiting in any way. With reference to the accompanying drawings, like elements are numbered alike:

[0006] FIG. **1** depicts a cross sectional view of a disintegrable tubular anchoring system;

[0007] FIG. **2** depicts a cross sectional view of a disintegrable metal composite;

[0008] FIG. **3** is a photomicrograph of an exemplary embodiment of a disintegrable metal composite as disclosed herein;

[0009] FIG. **4** depicts a cross sectional view of a composition used to make the disintegrable metal composite shown in FIG. **2**;

[0010] FIG. **5**A is a photomicrograph of a pure metal without a cellular nanomatrix;

[0011] FIG. **5**B is a photomicrograph of a disintegrable metal composite with a metal matrix and cellular nanomatrix;

[0012] FIG. **6** is a graph of mass loss versus time for various disintegrable metal composites that include a cellular nanomatrix indicating selectively tailorable disintegration rates;

[0013] FIG. **7**A is an electron photomicrograph of a fracture surface of a compact formed from a pure Mg powder;

[0014] FIG. **7**B is an electron photomicrograph of a fracture surface of an exemplary embodiment of a disintegrable metal composite with a cellular nanomatrix as described herein;

[0015] FIG. **8** is a graph of the compressive strength of a metal composite with a cellular nanomatrix versus weight percentage of a constituent (Al_2O_3) of the cellular nanomatrix;

[0016] FIG. **9**A depicts a cross sectional view of an embodiment of a disintegrable tubular anchoring system in a borehole;

[0017] FIG. **9**B depicts a cross sectional view of the system of FIG. **9**A in a set position;

[0018] FIG. **10** depicts a cross sectional view of a disintegrable frustoconical member;

[0019] FIG. **11** depicts a cross sectional view of a disintegrable bottom sub;

[0020] FIGS. **12**A, **12**B, and **12**C respectively depict a perspective view, cross sectional view, and a top view of a disintegrable sleeve;

[0021] FIGS. **13**A and **13**B respectively depict a perspective view and cross sectional view of a disintegrable seal;

[0022] FIG. **14** depicts a cross sectional view of another embodiment of a disintegrable tubular anchoring system;

[0023] FIG. **15** depicts a cross sectional view of the disintegrable tubular anchoring system of FIG. **14** in a set position;

[0024] FIG. **16** depicts a cross sectional view of another embodiment of a disintegrable tubular anchoring system;

[0025] FIG. **17** depicts a cross sectional view of another embodiment of a disintegrable seal with an elastomer backup ring in a disintegrable tubular anchoring system; and

[0026] FIGS. **18**A and **18**B respectively depict a cross sectional and perspective views of another embodiment of a disintegrable seal.

DETAILED DESCRIPTION

[0027] A detailed description of one or more embodiments of the disclosed apparatus and method are presented herein by way of exemplification and not limitation with reference to the Figures.

[0028] The inventors have discovered that a high strength, high ductility yet fully disintegrable tubular anchoring system can be made from materials that selectively and controllably disintegrate in response to contact with certain downhole fluids or in response to changed conditions. Such a disintegrable system includes components that are selectively corrodible and have selectively tailorable disintegration rates and selectively tailorable material properties. Additionally, the disintegrable system has components that have varying compression and tensile strengths and that include a seal (to form, e.g., a conformable metal-to-metal seal), cone, deformable sleeve (or slips), and bottom sub. As used herein, "disintegrable" refers to a material or component that is consumable, corrodible, degradable, dissolvable, weakenable, or otherwise removable. It is to be understood that use herein of the term "disintegrate," or any of its forms (e.g., "disintegration"), incorporates the stated meaning.

[0029] An embodiment of a disintegrable tubular anchoring system is show in FIG. **1**. The disintegrable tubular

anchoring system **110** includes a seal **112**, frustoconical member **114**, a sleeve **116** (shown herein as a slip ring), and a bottom sub **118**. The system **110** is configured such that longitudinal movement of the frustoconical member **114** relative to the sleeve **116** and relative to the seal **112** causes the sleeve **116** and seal **112** respectively to be radially altered. Although in this embodiment the radial alterations are in radially outward directions, in alternate embodiments the radial alterations could be in other directions such as radially inward. Additionally, a longitudinal dimension D**1** and thickness T**1** of a wall portion of the seal **112** can be altered upon application of a compressive force thereto. The seal **112**, frustoconical member **114**, sleeve **116**, and bottom sub **118** (i.e., components of the system **110**) are disintegrable and contain a metal composite. The metal composite includes a metal matrix disposed in a cellular nanomatrix and a disintegration agent.

[0030] In an embodiment, the disintegration agent is disposed in the metal matrix. In another embodiment, the disintegration agent is disposed external to the metal matrix. In yet another embodiment, the disintegration agent is disposed in the metal matrix as well as external to the metal matrix. The metal composite also includes the cellular nanomatrix that comprises a metallic nanomatrix material. The disintegration agent can be disposed in the cellular nanomatrix among the metallic nanomatrix material. An exemplary metal composite and method used to make the metal composite are disclosed in U.S. patent application Ser. Nos. 12/633,682, 12/633,688, 13/220,832, 13/220,822, and 13/358,307, the disclosure of each of which patent application is incorporated herein by reference in its entirety.

[0031] The metal composite is, for example, a powder compact as shown in FIG. **2**. The metal composite **200** includes a cellular nanomatrix **216** comprising a nanomatrix material **220** and a metal matrix **214** (e.g., a plurality of dispersed particles) comprising a particle core material **218** dispersed in the cellular nanomatrix **216**. The particle core material **218** comprises a nanostructured material. Such a metal composite having the cellular nanomatrix with metal matrix disposed therein is referred to as controlled electrolytic material.

[0032] With reference to FIGS. **2** and **4**, metal matrix **214** can include any suitable metallic particle core material **218** that includes nanostructure as described herein. In an exemplary embodiment, the metal matrix **214** is formed from particle cores **14** (FIG. **4**) and can include an element such as aluminum, iron, magnesium, manganese, zinc, or a combination thereof, as the nanostructured particle core material **218**. More particularly, in an exemplary embodiment, the metal matrix **214** and particle core material **218** can include various Al or Mg alloys as the nanostructured particle core material **218**, including various precipitation hardenable alloys Al or Mg alloys. In some embodiments, the particle core material **218** includes magnesium and aluminum where the aluminum is present in an amount of about 1 weight percent (wt %) to about 15 wt %, specifically about 1 wt % to about 10 wt %, and more specifically about 1 wt % to about 5 wt %, based on the weight of the metal matrix, the balance of the weight being magnesium.

[0033] In an additional embodiment, precipitation hardenable Al or Mg alloys are particularly useful because they can strengthen the metal matrix **214** through both nanostructuring and precipitation hardening through the incorporation of particle precipitates as described herein. The metal matrix **214** and particle core material **218** also can include a rare earth element, or a combination of rare earth elements. Exemplary rare earth elements include Sc, Y, La, Ce, Pr, Nd, or Er. A combination comprising at least one of the foregoing rare earth elements can be used. Where present, the rare earth element can be present in an amount of about 5 wt % or less, and specifically about 2 wt % or less, based on the weight of the metal composite.

[0034] The metal matrix **214** and particle core material **218** also can include a nanostructured material **215**. In an exemplary embodiment, the nanostructured material **215** is a material having a grain size (e.g., a subgrain or crystallite size) that is less than about 200 nanometers (nm), specifically about 10 nm to about 200 nm, and more specifically an average grain size less than about 100 nm. The nanostructure of the metal matrix **214** can include high angle boundaries **227**, which are usually used to define the grain size, or low angle boundaries **229** that may occur as substructure within a particular grain, which are sometimes used to define a crystallite size, or a combination thereof. It will be appreciated that the nanocellular matrix **216** and grain structure (nanostructured material **215** including grain boundaries **227** and **229**) of the metal matrix **214** are distinct features of the metal composite **200**. Particularly, nanocellular matrix **216** is not part of a crystalline or amorphous portion of the metal matrix **214**.

[0035] The disintegration agent is included in the metal composite **200** to control the disintegration rate of the metal composite **200**. The disintegration agent can be disposed in the metal matrix **214**, the cellular nanomatrix **216**, or a combination thereof. According to an embodiment, the disintegration agent includes a metal, fatty acid, ceramic particle, or a combination comprising at least one of the foregoing, the disintegration agent being disposed among the controlled electrolytic material to change the disintegration rate of the controlled electrolytic material. In one embodiment, the disintegration agent is disposed in the cellular nanomatrix external to the metal matrix. In a non-limiting embodiment, the disintegration agent increases the disintegration rate of the metal composite **200**. In another embodiment, the disintegration agent decreases the disintegration rate of the metal composite **200**. The disintegration agent can be a metal including cobalt, copper, iron, nickel, tungsten, zinc, or a combination comprising at least one of the foregoing. In a further embodiment, the disintegration agent is the fatty acid, e.g., fatty acids having 6 to 40 carbon atoms. Exemplary fatty acids include oleic acid, stearic acid, lauric acid, hyroxystearic acid, behenic acid, arachidonic acid, linoleic acid, linolenic acid, recinoleic acid, palmitic acid, montanic acid, or a combination comprising at least one of the foregoing. In yet another embodiment, the disintegration agent is ceramic particles such as boron nitride, tungsten carbide, tantalum carbide, titanium carbide, niobium carbide, zirconium carbide, boron carbide, hafnium carbide, silicon carbide, niobium boron carbide, aluminum nitride, titanium nitride, zirconium nitride, tantalum nitride, or a combination comprising at least one of the foregoing. Additionally, the ceramic particle can be one of the ceramic materials discussed below with regard to the strengthening agent. Such ceramic particles have a size of 5 μm or less, specifically 2 μm or less, and more specifically 1 μm or less. The disintegration agent can be present in an amount effective to cause disintegration of the metal composite **200** at a desired disintegration rate, specifically about 0.25 wt % to about 15 wt %, specifically about 0.25 wt % to about 10 wt %, specifically about 0.25 wt % to about 1 wt %, based on the weight of the metal composite.

[0036] In an exemplary embodiment, the cellular nanomatrix **216** includes aluminum, cobalt, copper, iron, magnesium, nickel, silicon, tungsten, zinc, an oxide thereof, a nitride thereof, a carbide thereof, an intermetallic compound thereof, a cermet thereof, or a combination comprising at least one of the foregoing. The metal matrix can be present in an amount from about 50 wt % to about 95 wt %, specifically about 60 wt % to about 95 wt %, and more specifically about 70 wt % to about 95 wt %, based on the weight of the seal. Further, the amount of the metal nanomatrix material is about 10 wt % to about 50 wt %, specifically about 20 wt % to about 50 wt %, and more specifically about 30 wt % to about 50 wt %, based on the weight of the seal.

[0037] In another embodiment, the metal composite includes a second particle. As illustrated generally in FIGS. **2** and **4**, the metal composite **200** can be formed using a coated metallic powder **10** and an additional or second powder **30**, i.e., both powders **10** and **30** can have substantially the same particulate structure without having identical chemical compounds. The use of an additional powder **30** provides a metal composite **200** that also includes a plurality of dispersed second particles **234**, as described herein, that are dispersed within the cellular nanomatrix **216** and are also dispersed with respect to the metal matrix **214**. Thus, the dispersed second particles **234** are derived from second powder particles **32** disposed in the powder **10**, **30**. In an exemplary embodiment, the dispersed second particles **234** include Ni, Fe, Cu, Co, W, Al, Zn, Mn, Si, an oxide thereof, nitride thereof, carbide thereof, intermetallic compound thereof, cermet thereof, or a combination comprising at least one of the foregoing.

[0038] Referring again to FIG. **2**, the metal matrix **214** and particle core material **218** also can include an additive particle **222**. The additive particle **222** provides a dispersion strengthening mechanism to the metal matrix **214** and provides an obstacle to, or serves to restrict, the movement of dislocations within individual particles of the metal matrix **214**. Additionally, the additive particle **222** can be disposed in the cellular nanomatrix **216** to strengthen the metal composite **200**. The additive particle **222** can have any suitable size and, in an exemplary embodiment, can have an average particle size of about 10 nm to about 1 micron, and specifically about 50 nm to about 200 nm. Here, size refers to the largest linear dimension of the additive particle. The additive particle **222** can include any suitable form of particle, including an embedded particle **224**, a precipitate particle **226**, or a dispersoid particle **228**. Embedded particle **224** can include any suitable embedded particle, including various hard particles. The embedded particle can include various metal, carbon, metal oxide, metal nitride, metal carbide, intermetallic compound, cermet particle, or a combination thereof. In an exemplary embodiment, hard particles can include Ni, Fe, Cu, Co, W, Al, Zn, Mn, Si, an oxide thereof, nitride thereof, carbide thereof, intermetallic compound thereof, cermet thereof, or a combination comprising at least one of the foregoing. The additive particle can be present in an amount of about 0.5 wt % to about 25 wt %, specifically about 0.5 wt % to about 20 wt %, and more specifically about 0.5 wt % to about 10 wt %, based on the weight of the metal composite.

[0039] In metal composite **200**, the metal matrix **214** dispersed throughout the cellular nanomatrix **216** can have an equiaxed structure in a substantially continuous cellular nanomatrix **216** or can be substantially elongated along an axis so that individual particles of the metal matrix **214** are oblately or prolately shaped, for example. In the case where the metal matrix **214** has substantially elongated particles, the metal matrix **214** and the cellular nanomatrix **216** may be continuous or discontinuous. The size of the particles that make up the metal matrix **214** can be from about 50 nm to about 800 μm, specifically about 500 nm to about 600 μm, and more specifically about 1 μm to about 500 μm. The particle size of can be monodisperse or polydisperse, and the particle size distribution can be unimodal or bimodal. Size here refers to the largest linear dimension of a particle.

[0040] Referring to FIG. **3** a photomicrograph of an exemplary embodiment of a metal composite is shown. The metal composite **300** has a metal matrix **214** that includes particles having a particle core material **218**. Additionally, each particle of the metal matrix **214** is disposed in a cellular nanomatrix **216**. Here, the cellular nanomatrix **216** is shown as a white network that substantially surrounds the component particles of the metal matrix **214**.

[0041] According to an embodiment, the metal composite is formed from a combination of, for example, powder constituents. As illustrated in FIG. **4**, a powder **10** includes powder particles **12** that have a particle core **14** with a core material **18** and metallic coating layer **16** with coating material **20**. These powder constituents can be selected and configured for compaction and sintering to provide the metal composite **200** that is lightweight (i.e., having a relatively low density), high-strength, and selectably and controllably removable, e.g., by disintegration, from a borehole in response to a change in a borehole property, including being selectably and controllably disintegrable (e.g., by having a selectively tailorable disintegration rate curve) in an appropriate borehole fluid, including various borehole fluids as disclosed herein.

[0042] The nanostructure can be formed in the particle core **14** used to form metal matrix **214** by any suitable method, including a deformation-induced nanostructure such as can be provided by ball milling a powder to provide particle cores **14**, and more particularly by cryomilling (e.g., ball milling in ball milling media at a cryogenic temperature or in a cryogenic fluid, such as liquid nitrogen) a powder to provide the particle cores **14** used to form the metal matrix **214**. The particle cores **14** may be formed as a nanostructured material **215** by any suitable method, such as, for example, by milling or cryomilling of prealloyed powder particles of the materials described herein. The particle cores **14** may also be formed by mechanical alloying of pure metal powders of the desired amounts of the various alloy constituents. Mechanical alloying involves ball milling, including cryomilling, of these powder constituents to mechanically enfold and intermix the constituents and form particle cores **14**. In addition to the creation of nanostructure as described above, ball milling, including cryomilling, can contribute to solid solution strengthening of the particle core **14** and core material **18**, which in turn can contribute to solid solution strengthening of the metal matrix **214** and particle core material **218**. The solid solution strengthening can result from the ability to mechanically intermix a higher concentration of interstitial or substitutional solute atoms in the solid solution than is possible in accordance with the particular alloy constituent phase equilibria, thereby providing an obstacle to, or serving to restrict, the movement of dislocations within the particle, which in turn provides a strengthening mechanism in the particle core **14** and the metal matrix **214**. The particle core **14** can also be formed with a nanostructure (grain boundaries **227**, **229**) by

methods including inert gas condensation, chemical vapor condensation, pulse electron deposition, plasma synthesis, crystallization of amorphous solids, electrodeposition, and severe plastic deformation, for example. The nanostructure also can include a high dislocation density, such as, for example, a dislocation density between about 10^{17} m^{-2} and about 10^{18} m^{-2}, which can be two to three orders of magnitude higher than similar alloy materials deformed by traditional methods, such as cold rolling.

[0043] The substantially-continuous cellular nanomatrix **216** (see FIG. **3**) and nanomatrix material **220** formed from metallic coating layers **16** by the compaction and sintering of the plurality of metallic coating layers **16** with the plurality of powder particles **12**, such as by cold isostatic pressing (CIP), hot isostatic pressing (HIP), or dynamic forging. The chemical composition of nanomatrix material **220** may be different than that of coating material **20** due to diffusion effects associated with the sintering. The metal composite **200** also includes a plurality of particles that make up the metal matrix **214** that comprises the particle core material **218**. The metal matrix **214** and particle core material **218** correspond to and are formed from the plurality of particle cores **14** and core material **18** of the plurality of powder particles **12** as the metallic coating layers **16** are sintered together to form the cellular nanomatrix **216**. The chemical composition of particle core material **218** may also be different than that of core material **18** due to diffusion effects associated with sintering.

[0044] As used herein, the term cellular nanomatrix **216** does not connote the major constituent of the powder compact, but rather refers to the minority constituent or constituents, whether by weight or by volume. This is distinguished from most matrix composite materials where the matrix comprises the majority constituent by weight or volume. The use of the term substantially continuous, cellular nanomatrix is intended to describe the extensive, regular, continuous and interconnected nature of the distribution of nanomatrix material **220** within the metal composite **200**. As used herein, "substantially continuous" describes the extension of the nanomatrix material **220** throughout the metal composite **200** such that it extends between and envelopes substantially all of the metal matrix **214**. Substantially continuous is used to indicate that complete continuity and regular order of the cellular nanomatrix **220** around individual particles of the metal matrix **214** are not required. For example, defects in the coating layer **16** over particle core **14** on some powder particles **12** may cause bridging of the particle cores **14** during sintering of the metal composite **200**, thereby causing localized discontinuities to result within the cellular nanomatrix **216**, even though in the other portions of the powder compact the cellular nanomatrix **216** is substantially continuous and exhibits the structure described herein. In contrast, in the case of substantially elongated particles of the metal matrix **214** (i.e., non-equiaxed shapes), such as those formed by extrusion, "substantially discontinuous" is used to indicate that incomplete continuity and disruption (e.g., cracking or separation) of the nanomatrix around each particle of the metal matrix **214**, such as may occur in a predetermined extrusion direction. As used herein, "cellular" is used to indicate that the nanomatrix defines a network of generally repeating, interconnected, compartments or cells of nanomatrix material **220** that encompass and also interconnect the metal matrix **214**. As used herein, "nanomatrix" is used to describe the size or scale of the matrix, particularly the thickness of the matrix between adjacent particles of the metal matrix **214**. The metallic coating layers that are sintered together to form the nanomatrix are themselves nanoscale thickness coating layers. Since the cellular nanomatrix **216** at most locations, other than the intersection of more than two particles of the metal matrix **214**, generally comprises the interdiffusion and bonding of two coating layers **16** from adjacent powder particles **12** having nanoscale thicknesses, the cellular nanomatrix **216** formed also has a nanoscale thickness (e.g., approximately two times the coating layer thickness as described herein) and is thus described as a nanomatrix. Further, the use of the term metal matrix **214** does not connote the minor constituent of metal composite **200**, but rather refers to the majority constituent or constituents, whether by weight or by volume. The use of the term metal matrix is intended to convey the discontinuous and discrete distribution of particle core material **218** within metal composite **200**.

[0045] Embedded particle **224** can be embedded by any suitable method, including, for example, by ball milling or cryomilling hard particles together with the particle core material **18**. A precipitate particle **226** can include any particle that can be precipitated within the metal matrix **214**, including precipitate particles **226** consistent with the phase equilibria of constituents of the materials, particularly metal alloys, of interest and their relative amounts (e.g., a precipitation hardenable alloy), and including those that can be precipitated due to non-equilibrium conditions, such as may occur when an alloy constituent that has been forced into a solid solution of the alloy in an amount above its phase equilibrium limit, as is known to occur during mechanical alloying, is heated sufficiently to activate diffusion mechanisms that enable precipitation. Dispersoid particles **228** can include nanoscale particles or clusters of elements resulting from the manufacture of the particle cores **14**, such as those associated with ball milling, including constituents of the milling media (e.g., balls) or the milling fluid (e.g., liquid nitrogen) or the surfaces of the particle cores **14** themselves (e.g., metallic oxides or nitrides). Dispersoid particles **228** can include an element such as, for example, Fe, Ni, Cr, Mn, N, O, C, H, and the like. The additive particles **222** can be disposed anywhere in conjunction with particle cores **14** and the metal matrix **214**. In an exemplary embodiment, additive particles **222** can be disposed within or on the surface of metal matrix **214** as illustrated in FIG. **2**. In another exemplary embodiment, a plurality of additive particles **222** are disposed on the surface of the metal matrix **214** and also can be disposed in the cellular nanomatrix **216** as illustrated in FIG. **2**.

[0046] Similarly, dispersed second particles **234** may be formed from coated or uncoated second powder particles **32** such as by dispersing the second powder particles **32** with the powder particles **12**. In an exemplary embodiment, coated second powder particles **32** may be coated with a coating layer **36** that is the same as coating layer **16** of powder particles **12**, such that coating layers **36** also contribute to the nanomatrix **216**. In another exemplary embodiment, the second powder particles **232** may be uncoated such that dispersed second particles **234** are embedded within nanomatrix **216**. The powder **10** and additional powder **30** may be mixed to form a homogeneous dispersion of dispersed particles **214** and dispersed second particles **234** or to form a non-homogeneous dispersion of these particles. The dispersed second particles **234** may be formed from any suitable additional powder **30** that is different from powder **10**, either due to a compositional difference in the particle core **34**, or coating layer **36**, or both of them, and may include any of the materials

disclosed herein for use as second powder **30** that are different from the powder **10** that is selected to form powder compact **200**.

[0047] In an embodiment, the metal composite optionally includes a strengthening agent. The strengthening agent increases the material strength of the metal composite. Exemplary strengthening agents include a ceramic, polymer, metal, nanoparticles, cermet, and the like. In particular, the strengthening agent can be silica, glass fiber, carbon fiber, carbon black, carbon nanotubes, oxides, carbides, nitrides, silicides, borides, phosphides, sulfides, cobalt, nickel, iron, tungsten, molybdenum, tantalum, titanium, chromium, niobium, boron, zirconium, vanadium, silicon, palladium, hafnium, aluminum, copper, or a combination comprising at least one of the foregoing. According to an embodiment, a ceramic and metal is combined to form a cermet, e.g., tungsten carbide, cobalt nitride, and the like. Exemplary strengthening agents particularly include magnesia, mullite, thoria, beryllia, urania, spinels, zirconium oxide, bismuth oxide, aluminum oxide, magnesium oxide, silica, barium titanate, cordierite, boron nitride, tungsten carbide, tantalum carbide, titanium carbide, niobium carbide, zirconium carbide, boron carbide, hafnium carbide, silicon carbide, niobium boron carbide, aluminum nitride, titanium nitride, zirconium nitride, tantalum nitride, hafnium nitride, niobium nitride, boron nitride, silicon nitride, titanium boride, chromium boride, zirconium boride, tantalum boride, molybdenum boride, tungsten boride, cerium sulfide, titanium sulfide, magnesium sulfide, zirconium sulfide, or a combination comprising at least one of the foregoing.

[0048] In one embodiment, the strengthening agent is a particle with size of about 100 microns or less, specifically about 10 microns or less, and more specifically 500 nm or less. In another embodiment, a fibrous strengthening agent can be combined with a particulate strengthening agent. It is believed that incorporation of the strengthening agent can increase the strength and fracture toughness of the metal composite. Without wishing to be bound by theory, finer (i.e., smaller) sized particles can produce a stronger metal composite as compared with larger sized particles. Moreover, the shape of strengthening agent can vary and includes fiber, sphere, rod, tube, and the like. The strengthening agent can be present in an amount of 0.01 weight percent (wt %) to 20 wt %, specifically 0.01 wt % to 10 wt %, and more specifically 0.01 wt % to 5 wt %.

[0049] In a process for preparing a component of a disintegrable anchoring system (e.g., a seal, frustoconical member, sleeve, bottom sub, and the like) containing a metal composite, the process includes combining a metal matrix powder, disintegration agent, metal nanomatrix material, and optionally a strengthening agent to form a composition; compacting the composition to form a compacted composition; sintering the compacted composition; and pressing the sintered composition to form the component of the disintegrable system. The members of the composition can be mixed, milled, blended, and the like to form the powder **10** as shown in FIG. **4** for example. It should be appreciated that the metal nanomatrix material is a coating material disposed on the metal matrix powder that, when compacted and sintered, forms the cellular nanomatrix. A compact can be formed by pressing (i.e., compacting) the composition at a pressure to form a green compact. The green compact can be subsequently pressed under a pressure of about 15,000 psi to about 100,000 psi, specifically about 20,000 psi to about 80,000 psi, and more specifically about 30,000 psi to about 70,000 psi, at a temperature of about 250° C. to about 600° C., and specifically about 300° C. to about 450° C., to form the powder compact. Pressing to form the powder compact can include compression in a mold. The powder compact can be further machined to shape the powder compact to a useful shape. Alternatively, the powder compact can be pressed into the useful shape. Machining can include cutting, sawing, ablating, milling, facing, lathing, boring, and the like using, for example, a mill, table saw, lathe, router, electric discharge machine, and the like.

[0050] The metal matrix **200** can have any desired shape or size, including that of a cylindrical billet, bar, sheet, toroid, or other form that may be machined, formed or otherwise used to form useful articles of manufacture, including various wellbore tools and components. Pressing is used to form a component of the disintegrable anchoring system (e.g., seal, frustoconical member, sleeve, bottom sub, and the like) from the sintering and pressing processes used to form the metal composite **200** by deforming the powder particles **12**, including particle cores **14** and coating layers **16**, to provide the full density and desired macroscopic shape and size of the metal composite **200** as well as its microstructure. The morphology (e.g. equiaxed or substantially elongated) of the individual particles of the metal matrix **214** and cellular nanomatrix **216** of particle layers results from sintering and deformation of the powder particles **12** as they are compacted and interdiffuse and deform to fill the interparticle spaces of the metal matrix **214** (FIG. **2**). The sintering temperatures and pressures can be selected to ensure that the density of the metal composite **200** achieves substantially full theoretical density.

[0051] The metal composite has beneficial properties for use in, for example a downhole environment. In an embodiment, a component of the disintegrable anchoring system made of the metal composite has an initial shape that can be run downhole and, in the case of the seal and sleeve, can be subsequently deformed under pressure. The metal composite is strong and ductile with a percent elongation of about 0.1% to about 75%, specifically about 0.1% to about 50%, and more specifically about 0.1% to about 25%, based on the original size of the component of the disintegrable anchoring system. The metal composite has a yield strength of about 15 kilopounds per square inch (ksi) to about 50 ksi, and specifically about 15 ksi to about 45 ksi. The compressive strength of the metal composite is from about 30 ksi to about 100 ksi, and specifically about 40 ksi to about 80 ksi. The components of the disintegrable anchoring system can have the same or different material properties, such as percent elongation, compressive strength, tensile strength, and the like.

[0052] Unlike elastomeric materials, the components of the disintegrable anchoring system herein that include the metal composite have a temperature rating up to about 1200° F., specifically up to about 1000° F., and more specifically about 800° F. The disintegrable anchoring system is temporary in that the system is selectively and tailorably disintegrable in response to contact with a downhole fluid or change in condition (e.g., pH, temperature, pressure, time, and the like). Moreover, the components of the disintegrable anchoring system can have the same or different disintegration rates or reactivities with the downhole fluid. Exemplary downhole fluids include brine, mineral acid, organic acid, or a combination comprising at least one of the foregoing. The brine can be, for example, seawater, produced water, completion brine, or a combination thereof. The properties of the brine can

depend on the identity and components of the brine. Seawater, as an example, contains numerous constituents such as sulfate, bromine, and trace metals, beyond typical halide-containing salts. On the other hand, produced water can be water extracted from a production reservoir (e.g., hydrocarbon reservoir), produced from the ground. Produced water is also referred to as reservoir brine and often contains many components such as barium, strontium, and heavy metals. In addition to the naturally occurring brines (seawater and produced water), completion brine can be synthesized from fresh water by addition of various salts such as KCl, NaCl, $ZnCl_2$, $MgCl_2$, or $CaCl_2$ to increase the density of the brine, such as 10.6 pounds per gallon of $CaCl_2$ brine. Completion brines typically provide a hydrostatic pressure optimized to counter the reservoir pressures downhole. The above brines can be modified to include an additional salt. In an embodiment, the additional salt included in the brine is NaCl, KCl, NaBr, $MgCl_2$, $CaCl_2$, $CaBr_2$, $ZnBr_2$, NH_4Cl, sodium formate, cesium formate, and the like. The salt can be present in the brine in an amount from about 0.5 wt. % to about 50 wt. %, specifically about 1 wt. % to about 40 wt. %, and more specifically about 1 wt. % to about 25 wt. %, based on the weight of the composition.

[0053] In another embodiment, the downhole fluid is a mineral acid that can include hydrochloric acid, nitric acid, phosphoric acid, sulfuric acid, boric acid, hydrofluoric acid, hydrobromic acid, perchloric acid, or a combination comprising at least one of the foregoing. In yet another embodiment, the downhole fluid is an organic acid that can include a carboxylic acid, sulfonic acid, or a combination comprising at least one of the foregoing. Exemplary carboxylic acids include formic acid, acetic acid, chloroacetic acid, dichloroacetic acid, trichloroacetic acid, trifluoroacetic acid, proprionic acid, butyric acid, oxalic acid, benzoic acid, phthalic acid (including ortho-, meta- and para-isomers), and the like. Exemplary sulfonic acids include alkyl sulfonic acid or aryl sulfonic acid. Alkyl sulfonic acids include, e.g., methane sulfonic acid. Aryl sulfonic acids include, e.g., benzene sulfonic acid or toluene sulfonic acid. In one embodiment, the alkyl group may be branched or unbranched and may contain from one to about 20 carbon atoms and can be substituted or unsubstituted. The aryl group can be alkyl-substituted, i.e., may be an alkylaryl group, or may be attached to the sulfonic acid moiety via an alkylene group (i.e., an arylalkyl group). In an embodiment, the aryl group may be substituted with a heteroatom. The aryl group can have from about 3 carbon atoms to about 20 carbon atoms and include a polycyclic ring structure.

[0054] The disintegration rate (also referred to as dissolution rate) of the metal composite is about 1 milligram per square centimeter per hour ($mg/cm^2/hr$) to about 10,000 $mg/cm^2/hr$, specifically about 25 $mg/cm^2/hr$ to about 1000 $mg/cm^2/hr$, and more specifically about 50 $mg/cm^2/hr$ to about 500 $mg/cm^2/hr$. The disintegration rate is variable upon the composition and processing conditions used to form the metal composite herein.

[0055] Without wishing to be bound by theory, the unexpectedly high disintegration rate of the metal composite herein is due to the microstructure provided by the metal matrix and cellular nanomatrix. As discussed above, such microstructure is provided by using powder metallurgical processing (e.g., compaction and sintering) of coated powders, wherein the coating produces the nanocellular matrix and the powder particles produce the particle core material of the metal matrix. It is believed that the intimate proximity of the cellular nanomatrix to the particle core material of the metal matrix in the metal composite produces galvanic sites for rapid and tailorable disintegration of the metal matrix. Such electrolytic sites are missing in single metals and alloys that lack a cellular nanomatrix. For illustration, FIG. **5**A shows a compact **50** formed from magnesium powder. Although the compact **50** exhibits particles **52** surrounded by particle boundaries **54**, the particle boundaries constitute physical boundaries between substantially identical material (particles **52**). However, FIG. **5**B shows an exemplary embodiment of a composite metal **56** (a powder compact) that includes a metal matrix **58** having particle core material **60** disposed in a cellular nanomatrix **62**. The composite metal **56** was formed from aluminum oxide coated magnesium particles where, under powder metallurgical processing, the aluminum oxide coating produces the cellular nanomatrix **62**, and the magnesium produces the metal matrix **58** having particle core material **60** (of magnesium). Cellular nanomatrix **62** is not just a physical boundary as the particle boundary **54** in FIG. **5**A but is also a chemical boundary interposed between neighboring particle core materials **60** of the metal matrix **58**. Whereas the particles **52** and particle boundary **54** in compact **50** (FIG. **5**A) do not have galvanic sites, metal matrix **58** having particle core material **60** establish a plurality of galvanic sites in conjunction with the cellular nanomatrix **62**. The reactivity of the galvanic sites depend on the compounds used in the metal matrix **58** and the cellular nanomatrix **62** as is an outcome of the processing conditions used to the metal matrix and cellular nanomatrix microstructure of the metal composite.

[0056] Moreover, the microstructure of the metal composites herein is controllable by selection of powder metallurgical processing conditions and chemical materials used in the powders and coatings. Therefore, the disintegration rate is selectively tailorable as illustrated for metal composites of various compositions in FIG. **6**, which shows a graph of mass loss versus time for various metal composites that include a cellular nanomatrix. Specifically, FIG. **6** displays disintegration rate curves for four different metal composites (metal composite A **80**, metal composite B **82** metal composite C **84**, and metal composite D **86**). The slope of each segment of each curve (separated by the black dots in FIG. **6**) provides the disintegration rate for particular segments of the curve. Metal composite A **80** has two distinct disintegration rates (**802**, **806**). Metal composite B **82** has three distinct disintegration rates (**808**, **812**, **816**). Metal composite C **84** has two distinct disintegration rates (**818**, **822**), and metal composite D **86** has four distinct disintegration rates (**824**, **828**, **832**, and **836**). At a time represented by points **804**, **810**, **814**, **820**, **826**, **830**, and **834**, the rate of the disintegration of the metal composite (**80**, **82**, **84**, **86**) changes due to a changed condition (e.g., pH, temperature, time, pressure as discussed above). The rate may increase (e.g., going from rate **818** to rate **822**) or decrease (e.g., going from rate **802** to **806**) along the same disintegration curve. Moreover, a disintegration rate curve can have more than two rates, more than three rates, more than four rates, etc. based on the microstructure and components of the metallic composite. In this manner, the disintegration rate curve is selectively tailorable and distinguishable from mere metal alloys and pure metals that lack the microstructure (i.e., metal matrix and cellular nanomatrix) of the metal composites described herein.

[0057] Not only does the microstructure of the metal composite govern the disintegration rate behavior of the metal composite but also affects the strength of the metal composite. As a consequence, the metal composites herein also have a selectively tailorable material strength yield (and other material properties), in which the material strength yield varies due to the processing conditions and the materials used to produce the metal composite. To illustrate, FIG. **7**A shows an electron photomicrograph of a fracture surface of a compact formed from a pure Mg powder, and FIG. **7**B shows an electron photomicrograph of a fracture surface of an exemplary embodiment of a metal composite with a cellular nanomatrix as described herein. The microstructural morphology of the substantially continuous, cellular nanomatrix, which can be selected to provide a strengthening phase material, with the metal matrix (having particle core material), provides the metal composites herein with enhanced mechanical properties, including compressive strength and sheer strength, since the resulting morphology of the cellular nanomatrix/metal matrix can be manipulated to provide strengthening through the processes that are akin to traditional strengthening mechanisms, such as grain size reduction, solution hardening through the use of impurity atoms, precipitation or age hardening and strain/work hardening mechanisms. The cellular nanomatrix/metal matrix structure tends to limit dislocation movement by virtue of the numerous particle nanomatrix interfaces, as well as interfaces between discrete layers within the cellular nanomatrix material as described herein. This is exemplified in the fracture behavior of these materials, as illustrated in FIGS. **7**A and **7**B. In FIG. **7**A, a compact made using uncoated pure Mg powder and subjected to a shear stress sufficient to induce failure demonstrated intergranular fracture. In contrast, in FIG. **7**B, a metal composite made using powder particles having pure Mg powder particle cores to form metal matrix and metallic coating layers that includes Al to form the cellular nanomatrix and subjected to a shear stress sufficient to induce failure demonstrated transgranular fracture and a substantially higher fracture stress as described herein. Because these materials have high-strength characteristics, the core material and coating material may be selected to utilize low density materials or other low density materials, such as low-density metals, ceramics, glasses or carbon, that otherwise would not provide the necessary strength characteristics for use in the desired applications, including wellbore tools and components.

[0058] To further illustrate the selectively tailorable material properties of the metal composites having a cellular nanomatrix, FIG. **8** shows a graph of the compressive strength of a metal composite with a cellular nanomatrix versus weight percentage of a constituent (Al_2O_3) of the cellular nanomatrix. FIG. **8** clearly shows the effect of varying the weight percentage (wt %), i.e., thickness, of an alumina coating on the room temperature compressive strength of a metal composite with a cellular nanomatrix formed from coated powder particles that include a multilayer ($Al/Al_2O_3/Al$) metallic coating layer on pure Mg particle cores. In this example, optimal strength is achieved at 4 wt % of alumina, which represents an increase of 21% as compared to that of 0 wt % alumina.

[0059] Thus, the metal composites herein can be configured to provide a wide range of selectable and controllable corrosion or disintegration behavior from very low corrosion rates to extremely high corrosion rates, particularly corrosion rates that are both lower and higher than those of powder compacts that do not incorporate the cellular nanomatrix, such as a compact formed from pure Mg powder through the same compaction and sintering processes in comparison to those that include pure Mg dispersed particles in the various cellular nanomatrices described herein. These metal composites **200** may also be configured to provide substantially enhanced properties as compared to compacts formed from pure metal (e.g., pure Mg) particles that do not include the nanoscale coatings described herein. Moreover, metal alloys (formed by, e.g., casting from a melt or formed by metallurgically processing a powder) without the cellular nanomatrix also do not have the selectively tailorable material and chemical properties as the metal composites herein.

[0060] As mentioned above, the metal composite is used to produce articles that can be used as tools or implements, e.g., in a downhole environment. In a particular embodiment, the article is a seal, frustoconical member, sleeve, or bottom sub. In another embodiment, combinations of the articles are used together as a disintegrable tubular anchoring system.

[0061] Referring to FIGS. **9**A and **9**B, an embodiment of a disintegrable tubular anchoring system disclosed herein is illustrated at **510**. The sealing system **510** includes a frustoconical member **514** (also referred to as a cone and shown individually in FIG. **10**) having a first frustoconical portion **516** and a second frustoconical portion **520** that are tapered in opposing longitudinal directions to one another. A bottom sub **570** (shown individually in FIG. **11**) is disposed at an end of the disintegrable system **510**. Sleeve **524** (shown individually in FIG. **12**) is radially expandable in response to being moved longitudinally against the first frustoconical portion **516**. Similarly, a seal **528** (shown individually in FIGS. **13**A and **13**B) is radially expandable in response to being moved longitudinally against the second frustoconical portion **520**. One way of moving the sleeve **524** and the seal **528** relative to the frustoconical portions **516**, **520** is to compress longitudinally the complete assembly with a setting tool **558**. The seal **528** includes a seat **532** with a surface **536** that is tapered in this embodiment and is receptive to a plug **578** that can sealingly engage the surface **536** of seal **528**.

[0062] The seat **532** of the seal **528** also includes a collar **544** that is positioned between the seal **528** and the second frustoconical portion **520**. The collar **544** has a wall **548** whose thickness is tapered due to a radially inwardly facing frustoconical surface **552** thereon. The varied thickness of the wall **548** allows for thinner portions to deform more easily than thicker portions. This can be beneficial for at least two reasons. First, the thinner walled portion **549** can deform when the collar **544** is moved relative to the second frustoconical portion **520** in order for the seal **528** to expand radially into sealing engagement with a structure **540**. Second, the thicker walled portion **550** should resist deformation due to pressure differential thereacross that is created when pressuring up against a plug (e.g., plug **578**) seated at the seat **532** during treatment operations, for example. The taper angle of the frustoconical surface **552** may be selected to match a taper angle of the second frustoconical portion **520** thereby to allow the second frustoconical portion **520** to provide radial support to the collar **544** at least in the areas where they are in contact with one another.

[0063] The disintegrable tubular anchoring system **510** is configured to set (i.e., anchor) and seal to a structure **540** such as a liner, casing, or closed or open hole in an earth formation borehole, for example, as is employable in hydrocarbon

recovery and carbon dioxide sequestration applications. The sealing and anchoring to the structure **540** allows pressure against the plug **578** seated thereat to increase for treatment of the earth formation as is done during fracturing and acid treatment, for example. Additionally, the seat **532** is positioned in the seal **528** such that pressure applied against a plug seated on the seat **532** urges the seal **528** toward the sleeve **524** to thereby increase both sealing engagement of the seal **528** with the structure **540** and the frustoconical member **514** as well as increasing the anchoring engagement of the sleeve **524** with the structure **540**.

[0064] The sealing system **510** can be configured such that the sleeve **524** is anchored (positionally fixed) to the structure **540** prior to the seal **528** sealingly engaging with the structure **540**, or such that the seal **528** is sealingly engaged with the structure **540** prior to the sleeve **524** anchoring to the structure **540**. Controlling which of the seal **528** and the sleeve **524** engages with the structure **540** first can be selected through material properties relationships (e.g., relative compressive strength) or dimensional relationships between the components involved in the setting of the seal **528** in comparison to the components involved in the setting of the sleeve **524**. Regardless of whether the sleeve **524** or the seal **528** engages the structure **540** first may be set in response to directions of portions of a setting tool that set the disintegrable tubular anchoring system **510**. Damage to the seal **528** can be minimized by reducing or eliminating relative movement between the seal **528** and the structure **540** after the seal **528** is engaged with the structure **540**. In this embodiment, having the seal **528** engage with the structure **540** prior to having the sleeve **524** engage the structure **540** can achieve this goal.

[0065] The surface **536** of the seat **532** is positioned longitudinally upstream (as defined by fluid flow that urges a plug against the seat **532**) of the sleeve **524**. Additionally, the seat **536** of the seal can be positioned longitudinally upstream of the collar **544** of the seal **528**. This relative positioning allows forces generated by pressure against a plug seated against the land **536** further to urge the seal **528** into sealing engagement with the structure **540**.

[0066] The portion of the collar **544** that deforms conforms to the second frustoconical portion **520** sufficiently to be radially supported thereby, regardless of whether the taper angles match. The second frustoconical portion **520** can have taper angles from about 1° to about 30°, specifically about 2° to about 20° to facilitate radial expansion of the collar **544** and to allow frictional forces between the collar **544** and the second frustoconical portion **520** to maintain positional relationships therebetween after removal of longitudinal forces that caused the movement therebetween. The first frustoconical portion **516** can also have taper angles from about 10° to about 30°, specifically about 14° to about 20° for the same reasons that the second frustoconical portion **520** does. Either or both of the frustoconical surface **552** and the second frustoconical portion **520** can include more than one taper angle as is illustrated herein on the second frustoconical portion **520** where a nose **556** has a larger taper angle than the surface **520** has further from the nose **556**. Having multiple taper angles can provide operators with greater control over amounts of radial expansion of the collar **544** (and subsequently the seal **528**) per unit of longitudinal movement between the collar **544** and the frustoconical member **514**. The taper angles, in addition to other variables, also provide additional control over longitudinal forces needed to move the collar **544** relative to the frustoconical member **514**. Such control can allow the disintegrable tubular anchoring system **510** to expand the collar **544** of the seal **528** to set the seal **528** prior to expanding and setting the sleeve **224**.

[0067] In an embodiment, the setting tool **558** is disposed along the length of the system **510** from the bottom sub **570** to the seal **528**. The setting tool **558** can generate the loads needed to cause movement of the frustoconical member **514** relative to the sleeve **524**. The setting tool **558** can have a mandrel **560** with a stop **562** attached to one end **564** by a force failing member **566** such as a plurality of shear screws. The stop **562** is disposed to contact the bottom sub **570**. A plate **568** disposed to contact the seal **528** guidingly movable along the mandrel **560** (by means not shown herein) in a direction toward the stop **562** at the bottom sub **570** can longitudinally urge the frustoconical member **514** toward the sleeve **524**. Loads to fail the force failing member **566** can be set to only occur after the sleeve **524** has been radially altered by the frustoconical member **514** a selected amount. After failure of the force failing member **566**, the stop **562** may separate from the mandrel **560**, thereby allowing the mandrel **560** and the plate **568** to be retrieved to surface, for example.

[0068] According to an embodiment, the surface **572** of the sleeve **524** includes protrusions **574**, which may be referred to as teeth, configured to bitingly engage with a wall **576** of the structure **540**, within which the disintegrable system **510** is employable, when the surface **572** is in a radially altered (i.e., expanded) configuration. This biting engagement serves to anchor the disintegrable system **510** to the structure **540** to prevent relative movement therebetween. Although the structure **540** disclosed in this embodiment is a tubular, such as a liner or casing in a borehole, it could be an open hole in an earth formation, for example.

[0069] FIG. **9**B shows the disintegrable system **510** after the setting tool **558** has been removed from the structure **540** subsequent to setting the disintegrable system **510**. Here, the protrusions **574** of the sleeve **524** bitingly engage the wall **576** of the structure **540** to anchor the disintegrable system **510** thereto. Additionally, the seal **528** has been radially expanded to contact the wall **576** of the structure **540** on the outer surface of the seal **528** due to compression thereof by the setting tool **558**. The seal **528** deforms such that the length of the seal **528** has increased as the thickness **548** has decreased during compression of the seal **528** between the frustoconical member **514** and the wall **576** of structure **540**. In this way, the seal **528** forms a metal-to-metal seal against the frustoconical member **514** and a metal-to-metal seal against the wall **576**. Alternatively, the seal **528** can deform to complement topographical features of the wall **576** such as voids, pits, protrusions, and the like. Similarly, the ductility and tensile strength of the seal **528** allow the seal **528** to deform to complement topographical features of the frustoconical member **514**.

[0070] After setting the disintegrable system **510** with the protrusions **574** of the sleeve **514**, a plug **578** can be disposed on the surface **536** of seat **532**. Once the plug **578** is sealingly engaged with the seat **536**, pressure can increase upstream thereof to perform work such as fracturing an earth formation or actuating a downhole tool, for example, when employed in a hydrocarbon recovery application.

[0071] In an embodiment, as show in FIG. **9**B, the plug **578**, e.g., a ball, engages the seat **532** of seal **528**. Pressure is applied, for example, hydraulically, to the plug **578** to deform the collar **544** of the seal **528**. Deformation of the collar **544** causes the wall material **548** to elongate and sealably engage with the structure **540** (e.g., borehole casing) to form a metal-

to-metal seal with the first frustoconical portion **516** of the frustoconical member **514** and to from another metal-to-metal seal with the structure **576**. Here, the ductility of the metal composite allows the seal **528** to fill the space between the structure **540** and the frustoconical member **514**. A downhole operation can be performed at this time, and the plug **578** subsequently removed after the operation. Removal of the plug **578** from the seat **532** can occur by creating a pressure differential across the plug **578** such that the plug **578** dislodges from the seat **532** and moves away from the seal **528** and frustoconical member **514**. Thereafter, the any of the seal **528**, frustoconical member **514**, sleeve **524**, or bottom sub **570** can be disintegrated by contact with a downhole fluid. Alternatively, before the plug **578** is removed from the seat **532**, a downhole fluid can contact and disintegrate the seal **528**, and the plug **578** then can be removed from any of the remaining components of the disintegrable system **510**. Disintegration of the seal **528**, frustoconical member **514**, sleeve **524**, or bottom sub **570** is beneficial at least in part because the flow path of the borehole is restored without mechanically removing the components of the disintegrable system **510** (e.g., by boring or milling) or flushing the debris out of the borehole. It should be appreciated that the disintegration rates of the components of the disintegrable system **510** are independently selectively tailorable as discussed above, and that the seal **528**, frustoconical member **514**, sleeve **524**, or bottom sub **570** have independently selectively tailorable material properties such as yield strength and compressive strength.

[0072] According to another embodiment, the disintegrable tubular anchoring system **510** is configured to leave a through bore **580** with an inner radial dimension **582** and outer radial dimension **584** defined by a largest radial dimension of the disintegrable system **510** when set within the structure **540**. In an embodiment, the inner radial dimension **582** can be large enough for mandrel **560** of the setting tool **558** to fit through the system **510**. The stop **562** of the setting tool **558** can be left in the structure **540** after setting the disintegrable system **510** and removal of the mandrel **560**. The stop **562** can be fished out of the structure **540** after disintegrating the system **510** at least to a point where the stop **562** can pass through the inner radial dimension **582**. Thus, a component of the disintegrable system **510** can be substantially solid. By incorporation of the through bore **580** in the disintegrable system **510**, a fluid can be circulated through the disintegrable system **510** from either the downstream or upstream direction in the structure **540** to cause disintegration of a component (e.g., the sleeve).

[0073] In another embodiment, the disintegrable tubular anchoring system **510** is configured with the inner radial dimension **582** that is large in relation to the outer radial dimension **584**. According to one embodiment, the inner radial dimension **582** is greater than 50% of the outer radial dimension **584**, specifically greater than 60%, and more specifically greater than 70%.

[0074] The seal, frustoconical member, sleeve, and bottom sub can have beneficial properties for use in, for example a downhole environment, either in combination or separately. These components are disintegrable and can be part of a completely disintegrable anchoring system herein. Further, the components have mechanical and chemical properties of the metal composite described herein. The components thus beneficially are selectively and tailorably disintegrable in response to contact with a fluid or change in condition (e.g., pH, temperature, pressure, time, and the like). Exemplary fluids include brine, mineral acid, organic acid, or a combination comprising at least one of the foregoing.

[0075] A cross sectional view of an embodiment of a frustoconical member is shown in FIG. **10**. As described above, the frustoconical member **514** has a first frustoconical portion **516**, second frustoconical potion **520**, and nose **556**. The taper angle of the frustoconical member **514** can vary along the outer surface **584** so that the frustoconical member **514** has various cross sectional shapes including the truncated double cone shape shown. The wall thickness **586** therefore can vary along the length of the frustoconical member **514**, and the inner diameter of the frustoconical member **514** can be selected based on a particular application. The frustoconical member **514** can be used in various applications such as in the disintegrable tubular anchoring system herein as well as in any situation in which a strong or disintegrable frustoconical shape is useful. Exemplary applications include a bearing, flare fitting, valve stem, sealing ring, and the like.

[0076] A cross sectional view of a bottom sub is shown in FIG. **11**. The bottom sub **700** has a first end **702**, second end **704**, optional thread **706**, optional through holes **708**, inner diameter **710**, and outer diameter **712**. In an embodiment, the bottom sub **700** is the terminus of a tool (e.g., disintegrable system **510**). In another embodiment, the bottom sub **700** is disposed at an end of a string. In certain embodiment, the bottom sub **700** is used to attach tools to a string. Alternatively, the bottom sub **700** can be used between tools or strings and can be part of a joint or coupling. The bottom sub **700** can be used with a string and an article such as a bridge plug, frac plug, mud motor, packer, whip stock, and the like. In one non-limiting embodiment, the first end **702** provides an interface with, e.g., the frustoconical member **514** and the sleeve **524**. The second end **704** engages the stop **562** of the setting tool **558**. Thread **706**, when present, can be used to secure the bottom sub **700** to an article. In an embodiment, the frustoconical member **514** has a threaded portion that mates with the thread **706**. In some embodiments, thread **706** is absent, and the inner diameter **710** can be a straight bore or can have portions thereof that are tapered. The through holes **708** can transmit fluid, e.g., brine, to disintegrate the bottom sub **700** or other components of the disintegrable system **510**. The through holes also can be an attachment point for the force failing member **566** used in conjunction with the setting tool **558** or similar device. It is contemplated that the bottom sub **700** can have another cross sectional shape than that shown in FIG. **11**. Exemplary shapes include a cone, ellipsoid, toroid, sphere, cylinder, their truncated shapes, asymmetrical shapes, including a combination of the foregoing, and the like. Further, the bottom sub **700** can be a solid item or can have an inner diameter that is at least 10% the size of the outer diameter, specifically at least 50%, and more specifically at least 70%.

[0077] A sleeve is shown in a perspective, cross sectional, and top views respectively in FIGS. **12**A, **12**B, and **12**C. The sleeve **524** includes an outer surface **572**, protrusions **574** disposed on the outer surface **572**, and inner surface **571**. The sleeve **524** acts as a slip ring with the protrusions **574** as slips that bitingly engage a surface such as a wall of a casing or open hole as the sleeve **524** radially expands in response to a first portion **573** of the inner surface **571** engaging a mating surface (e.g., first frustoconical portion **516** in FIG. **10**). The protrusions **574** can circumferentially surround the entirety of the sleeve **524**. Alternatively, the protrusions **574** can be spaced apart, either symmetrically or asymmetrically, as

shown in the top view in FIG. **12**C. The shape of the sleeve **524** is not limited to that shown in FIG. **12**. The sleeve, in addition to being a slip ring in the disintegrable tubular anchoring system illustrated in FIG. **9**, can be used to set numerous tools including a packer, bridge plug, or frac plug or can be disposed in any environment where anti-slipping of an article can be accomplished by engaging the protrusions of the sleeve with a mating surface.

[0078] Referring to FIGS. **13**A and **13**B, a seal **400** includes an inner sealing surface **402**, outer sealing surface **404**, seat **406**, and a surface **408** of the seat **406**. The surface **408** is configured (e.g., shaped) to accept a member (e.g., a plug) to provide force on the seal **400** in order to deform the seal so that the inner sealing surface **402** and outer sealing surface **404** respectively form metal-to-metal seals with mating surfaces (not shown in FIGS. **13**A and **13**B). Alternatively, a compressive force is applied to the seal **400** by a frustoconical member and setting tool disposed at opposing ends of the seal **400** as in FIG. **9**A. In an embodiment, the seal **400** is useful in a downhole environment as a conformable, deformable, highly ductile, and disintegrable seal. In an embodiment, the seal **400** is a bridge plug, gasket, flapper valve, and the like.

[0079] In addition to being selectively corrodible, the seal herein deforms in situ to conform to a space in which it is disposed in response to an applied setting pressure, which is a pressure large enough to expand radially the seal or to decrease the wall thickness of the seal by increasing the length of the seal. Unlike many seals, e.g., an elastomer seal, the seal herein is prepared in a shape that corresponds to a mating surface to be sealed, e.g., a casing, or frustoconical shape of a downhole tool. In an embodiment, the seal is a temporary seal and has an initial shape that can be run downhole and subsequently deformed under pressure to form a metal-to-metal seal that deforms to surfaces that the seal contacts and fills spaces (e.g. voids) in a mating surface. To achieve the sealing properties, the seal has a percent elongation of about 10% to about 75%, specifically about 15% to about 50%, and more specifically about 15% to about 25%, based on the original size of the seal. The seal has a yield strength of about 15 kilopounds per square inch (ksi) to about 50 ksi, and specifically about 15 ksi to about 45 ksi. The compressive strength of the seal is from about 30 ksi to about 100 ksi, and specifically about 40 ksi to about 80 ksi. To deform the seal, a pressure of up to about 10,000 psi, and specifically about 9,000 psi can be applied to the seal.

[0080] Unlike elastomeric seals, the seal herein that includes the metal composite has a temperature rating up to about 1200° F., specifically up to about 1000° F., and more specifically up to about 800° F. The seal is temporary in that the seal is selectively and tailorably disintegrable in response to contact with a downhole fluid or change in condition (e.g., pH, temperature, pressure, time, and the like). Exemplary downhole fluids include brine, mineral acid, organic acid, or a combination comprising at least one of the foregoing.

[0081] Since the seal interworks with other components, e.g., a frustoconical member, sleeve, or bottom sub in, e.g., the disintegrable tubular anchoring system herein, the properties of each component are selected for the appropriate relative selectively tailorable material and chemical properties. These properties are a characteristic of the metal composite and the processing conditions that form the metal composite, which is used to produce such articles, i.e., the components. Therefore, in an embodiment, the metal composite of a component will differ from that of another component of the disintegrable system. In this way, the components have independent selectively tailorable mechanical and chemical properties.

[0082] According to an embodiment, the sleeve and seal deform under a force imparted by the frustoconical member and bottom sub. To achieve this result, the sleeve and seal have a compressive strength that is less than that of the bottom sub or frustoconical member. In another embodiment, the sleeve deforms before, after, or simultaneously as deformation of the seal. It is contemplated that the bottom sub or frustoconical member deforms in certain embodiments. In an embodiment, a component has a different amount of a strengthening agent than another component, for example, where a higher strength component has a greater amount of strengthening agent than does a component of lesser strength. In a specific embodiment, the frustoconical member has a greater amount of strengthening agent than that of the seal. In another embodiment, the frustoconical member has a greater amount of strengthening agent than that of the sleeve. Similarly, the bottom sub can have a greater amount of strengthening agent than either the seal or sleeve. In a particular embodiment, the frustoconical member has a compressive strength that is greater than that of either the seal or sleeve. In a further embodiment, the frustoconical member has a compressive strength that is greater than that of either of the seal or sleeve. In one embodiment, the frustoconical member has a compressive strength of 40 ksi to 100 ksi, specifically 50 ksi to 100 ksi. In another embodiment, the bottom sub has a compressive strength of 40 ksi to 100 ksi, specifically 50 ksi to 100 ksi. In yet another embodiment, the seal has a compressive strength of 30 ksi to 70 ksi, specifically 30 ksi to 60 ksi. In yet another embodiment, the sleeve has a compressive strength of 30 ksi to 80 ksi, specifically 30 ksi to 70 ksi. Thus, under a compressive force either the seal or sleeve will deform before deformation of either the bottom sub or frustoconical member.

[0083] Other factors that can affect the relative strength of the components include the type and size of the strengthening agent in each component. In an embodiment, the frustoconical member includes a strengthening of smaller size than a strengthening agent in either of the seal or sleeve. In yet another embodiment, the bottom sub includes a strengthening agent of smaller size than a strengthening agent in either of the seal or sleeve. In one embodiment, the frustoconical member includes a strengthening agent such as a ceramic, metal, cermet, or a combination thereof, wherein the size of the strengthening agent is from 10 nm to 200 μm, specifically 100 nm to 100 μm.

[0084] Yet another factor that impacts the relative selectively tailorable material and chemical properties of the components is the constituents of the metal composite, i.e., the metallic nanomatrix of the cellular nanomatrix, the metal matrix disposed in the cellular nanomatrix, or the disintegration agent. The compressive and tensile strengths and disintegration rate are determined by the chemical identity and relative amount of these constituents. Thus, these properties can be regulated by the constituents of the metal composite. According to an embodiment, a component (e.g., seal, frustoconical member, sleeve, or bottom sub) has a metal matrix of the metal composite that includes a pure metal, and another component has a metal matrix that includes an alloy. In another embodiment, the seal has a metal matrix that includes a pure metal, and the frustoconical member has a metal matrix that includes an alloy. In an additional embodiment, the sleeve has a metal matrix that is a pure metal. It is contem-

plated that a component can be functionally graded in that the metal matrix of the metal composite can contain both a pure metal and an alloy having a gradient in the relative amount of either the pure metal or alloy in the metal matrix as disposed in the component. Therefore, the value of the selectively tailorable properties varies in relation to the position along the component.

[0085] In a particular embodiment, the disintegration rate of a component (e.g., seal, frustoconical member, sleeve, or bottom sub) has a greater value than that of another component. Alternatively, each component can have substantially the same disintegration rate. In a further embodiment, the sleeve has a greater disintegration rate than another component, e.g., the frustoconical member. In another embodiment, the amount of disintegration agent of a component (e.g., seal, frustoconical member, sleeve, or bottom sub) is present in an amount greater than that of another component. In another embodiment, the amount of disintegration agent present in the sleeve is greater than another component. In one embodiment, the amount of disintegrating agent in the seal is greater than another component.

[0086] Referring to FIGS. **14** and **15**, an alternate embodiment of a disintegrable tubular anchoring system is illustrated at **1110**. The disintegrable system **1110** includes a frustoconical member **1114**, a sleeve **1118** having a surface **1122**, a seal **1126** having a surface **1130**, and a seat **1134**, wherein each component is made of the metal composite and has selectively tailorable mechanical and chemical properties herein. A primary difference between the system **510** (FIG. **9**) and the system **1110** is the initial relative position of the seal and frustoconical member.

[0087] An amount of radial alteration that the surface **1122** of the sleeve **1118** undergoes is controlled by how far the frustoconical member **1114** is forced into the sleeve **1118**. A frustoconical surface **1144** on the frustoconical member **1114** is wedgably engagable with a frustoconical surface **1148** on the sleeve **1118**. As such, the further the frustoconical member **1114** is moved relative to the sleeve **1118**, the greater the radial alteration of the sleeve **1118**. Similarly, the seal **1126** is positioned radially of the frustoconical surface **1144** and is longitudinally fixed relative to the sleeve **1118** so the further the frustoconical member **1114** moves relative to the sleeve **1118** and the seal **1126**, the greater the radial alteration of the seal **1126** and the surface **1130**. The foregoing structure allows an operator to determine the amount of radial alteration of the surfaces **1122**, **1130** after the system **1110** is positioned within a structure **1150**.

[0088] Optionally, the system **1110** can include a collar **1154** positioned radially between the seal **1126** and the frustoconical member **1114** such that a radial dimension of the collar **1154** is also altered by the frustoconical member **1114** in response to the movement relative thereto. The collar **1154** can have a frustoconical surface **1158** complementary to the frustoconical surface **1144** such that substantially the full longitudinal extent of the collar **1154** is simultaneously radially altered upon movement of the frustoconical member **1114**. The collar **1154** may be made of a metal composite that is different than that of the seal **1126** or that of the frustoconical member **1114**. Thus, collar **1154** can maintain the seal **1126** at an altered radial dimension even if the frustoconical surface **1144** is later moved out of engagement with the frustoconical surface **1158**, thereby maintaining the seal **1126** in sealing engagement with a wall **1162** of the structure **1150**. This can be achieved by selecting the metal composite of the collar **1154** to have a higher compressive strength than that of the seal **1126**.

[0089] The disintegrable system **1110** further includes a land **1136** on the frustoconical member **1114** sealably engagable with the plug **1138**. Also included in the disintegrable system are a recess **1166** (within a wall **1058**) of the sleeve **1118** receptive to shoulders **1170** on fingers **1174**, which provisions are engagable together once the setting tool **558** compresses the disintegrable system **1110** in a similar manner as the disintegrable system **510** is settable with the setting tool **558** as shown in FIG. **9**.

[0090] Referring to FIG. **16**, another alternate embodiment of a disintegrable tubular anchoring system is illustrated at **1310**. The disintegrable system **1310** includes a first frustoconical member **1314**, sleeve **1318** positioned and configured to be radially expanded into anchoring engagement with a structure **1322**, illustrated herein as a wellbore in an earth formation **1326**, in response to being urged against a frustoconical surface **1330** of the first frustoconical member **1314**. A collar **1334** is radially expandable into sealing engagement with the structure **1322** in response to being urged longitudinally relative to a second frustoconical member **1338** and has a seat **1342** with a surface **1346** sealingly receptive to a plug **1350** (shown with dashed lines) runnable thereagainst. The seat **1342** is displaced in a downstream direction (rightward in FIG. **16**) from the collar **1334** as defined by fluid that urges the plug **1350** against the seat **1342**. This configuration and position of the surface **1346** relative to the collar **1334** aids in maintaining the collar **1334** in a radially expanded configuration (after having been expanded) by minimizing radial forces on the collar **1334** due to pressure differential across the seat **1342** when plugged by a plug **1350**.

[0091] To clarify, if the surface **1346** were positioned in a direction upstream of even a portion of the longitudinal extend of the collar **1334** (which it is not) then pressure built across the plug **1350** seated against the surface **1346** would generate a pressure differential radially across the portion of the collar **1334** positioned in a direction downstream of the surface **1346**. This pressure differential would be defined by a greater pressure radially outwardly of the collar **1334** than radially inwardly of the collar **1334**, thereby creating radially inwardly forces on the collar **1334**. These radially inwardly forces, if large enough, could cause the collar **1334** to deform radially inwardly potentially compromising the sealing integrity between the collar **1334** and the structure **1322** in the process. This condition is specifically avoided by the positioning of the surface **1346** relative to the collar **1334**.

[0092] Optionally, the disintegrable tubular anchoring system **1310** includes a seal **1354** positioned radially of the collar **1334** configured to facilitate sealing of the collar **1334** to the structure **1322** by being compressed radially therebetween when the collar **1334** is radially expanded. The seal **1354** is fabricated from a metal composite that has a lower compressive strength than that of the first frustoconical member **1314** to enhance sealing of the seal **1354** to both the collar **1334** and the structure **1322**. In an embodiment, the seal **1354** has a lower compressive strength than that of the collar **1334**.

[0093] Thus in this embodiment, the disintegrable system **1310** can include a first frustoconical member **1314**, sleeve **1318**, and an optional seal **1354**. In the instance when the seal **1354** is not present, the collar **1334** of the first frustoconical member **1314** can form a metal-to-metal seal with the casing or liner or conform to an openhole surface. In some embodi-

ments, the first frustoconical member **1314** contains a functionally graded metal composite such that the collar **1334** has a lower compressive strength value than that of the rest of the first frustoconical member **1314**. In another embodiment the collar **1334** has a lower compressive strength than that of the second frustoconical member **1338**. In yet another embodiment, the second frustoconical member **1338** has a greater compressive strength than that of the seal **1354**.

[0094] The components herein can be augmented with various materials. In one embodiment, a seal, e.g., seal **528**, can include a backup seal such as an elastomer material **602** as shown in FIG. **17**. The elastomer can be, for example, an O-ring disposed in a gland **604** on the surface of the seal **528**. The elastomer material includes but not limited to, for example, butadiene rubber (BR), butyl rubber (IIR), chlorosulfonated polyethylene (CSM), epichlorohydrin rubber (ECH, ECO), ethylene propylene diene monomer (EPDM), ethylene propylene rubber (EPR), fluoroelastomer (FKM), nitrile rubber (NBR, HNBR, HSN), perfluoroelastomer (FFKM), polyacrylate rubber(ACM), polychloroprene (neoprene) (CR), polyisoprene (IR), polysulfide rubber (PSR), sanifluor, silicone rubber (SiR), styrene butadiene rubber (SBR), or a combination comprising at least one of the foregoing.

[0095] As described herein, the components, e.g., the seal, can be used in a downhole environment, for example, to provide a metal-to-metal seal. In an embodiment, a method for temporarily sealing a downhole element includes disposing a component downhole and applying pressure to deform the component. The component can include a seal, frustoconical member, sleeve, bottom, or a combination comprising at least one of the foregoing. The method also includes conforming the seal to a space to form a temporary seal, compressing the sleeve to engage a surface, and thereafter contacting the component with a downhole fluid to disintegrate the component. The component includes the metal composite herein having a metal matrix, disintegration agent, cellular nanomatrix, and optionally strengthening agent. The metal composite of the seal forms an inner sealing surface and an outer sealing surface disposed radially from the inner sealing surface of the seal.

[0096] According to an embodiment, a process of isolating a structure includes disposing a disintegrable tubular anchoring system herein in a structure (e.g., tubular, pipe, tube, borehole (closed or open), and the like), radially altering the sleeve to engage a surface of the structure, and radially altering the seal to the isolate the structure. The disintegrable tubular anchoring system can be contacted with a fluid to disintegrate, e.g., the seal, frustoconical member, sleeve, bottom sub or a combination of at least one of the foregoing. The process further can include setting the disintegrable anchoring system with a setting tool. Additionally, a plug can be disposed on the seal. Isolating the structure can be completely or substantially impeding fluid flow through the structure.

[0097] Moreover, the seal can have various shapes and sealing surfaces besides the particular arrangement shown in FIGS. **9** and **13-16**. In another embodiment, Referring to FIGS. **18**A and **18**B, an embodiment of a seal disclosed herein is illustrated at **100**. The seal **100** includes a metal composite, a first sealing surface **102**, and a second sealing surface **104** opposingly disposed from the first sealing surface **102**. The metal composite includes a metal matrix disposed in a cellular nanomatrix, a disintegration agent, and optionally a strengthening agent. The seal **100** can be any shape and conforms in situ under pressure to a surface to form a temporary seal that is selectively disintegrable in response to contact with a fluid. In this embodiment, the seal **100** is an annular shape with an outer diameter **106** and inner diameter **108**. In some embodiments, the first surface **102**, second surface **104**, outer diameter **106**, inner diameter **108**, or a combination comprising at least one of the foregoing can be a sealing surface.

[0098] Although variations of a disintegrable tubular anchoring system have described that include several components together, it is contemplated that each component is separately and independently applicable as an article. Further, any combination of the components can be used together. Moreover, the components can be used in surface or downhole environments.

[0099] While one or more embodiments have been shown and described, modifications and substitutions may be made thereto without departing from the spirit and scope of the invention. Accordingly, it is to be understood that the present invention has been described by way of illustrations and not limitation. Embodiments herein are can be used independently or can be combined.

[0100] All ranges disclosed herein are inclusive of the endpoints, and the endpoints are independently combinable with each other. The suffix "(s)" as used herein is intended to include both the singular and the plural of the term that it modifies, thereby including at least one of that term (e.g., the colorant(s) includes at least one colorants). "Optional" or "optionally" means that the subsequently described event or circumstance can or cannot occur, and that the description includes instances where the event occurs and instances where it does not. As used herein, "combination" is inclusive of blends, mixtures, alloys, reaction products, and the like. All references are incorporated herein by reference.

[0101] The use of the terms "a" and "an" and "the" and similar referents in the context of describing the invention (especially in the context of the following claims) are to be construed to cover both the singular and the plural, unless otherwise indicated herein or clearly contradicted by context. As used herein, the term "a" includes at least one of an element that "a" precedes, for example, "a device" includes "at least one device." "Or" means "and/or." Further, it should further be noted that the terms "first," "second," and the like herein do not denote any order, quantity (such that more than one, two, or more than two of an element can be present), or importance, but rather are used to distinguish one element from another. The modifier "about" used in connection with a quantity is inclusive of the stated value and has the meaning dictated by the context (e.g., it includes the degree of error associated with measurement of the particular quantity).

What is claimed is:

1. A frustoconical member comprising:

a first frustoconical portion; and

a substrate comprising a metal composite which includes:

a cellular nanomatrix comprising a metallic nanomatrix material; and

a metal matrix disposed in the cellular nanomatrix.

2. The frustoconical member of claim **1**, further comprising a second frustoconical portion.

3. The frustoconical member of claim **2**, wherein the first frustoconical portion and second frustoconical portion are tapered in opposing directions to one another.

4. The frustoconical member of claim **1**, further comprising an inner radial dimension and outer radial dimension such that the inner radial dimension is greater than 50% of the outer radial dimension.

5. The frustoconical member of claim **1**, further comprising a seat disposed at an inner surface of the frustoconical member.

6. The frustoconical member of claim **1**, wherein the seat includes a land which is sealingly engagable with a removable plug runnable thereagainst, the land being longitudinally disposed relative to the first frustoconical portion in an upstream direction defined by direction of flow that urges the plug thereagainst.

7. The frustoconical member of claim **6**, further comprising a collar disposed radially from the land.

8. The frustoconical member of claim **7**, herein the collar has a compressive strength which is less than that of the first frustoconical portion.

9. The frustoconical member of claim **1**, wherein the metal matrix comprises aluminum, iron, magnesium, manganese, zinc, or a combination comprising at least one of the foregoing.

10. The frustoconical member of claim **1**, wherein the amount of the metal matrix is about 50 wt % to about 95 wt %, based on the weight of the metal composite.

11. The frustoconical member of claim **1**, wherein the metal matrix is an alloy, pure metal, or a combination comprising at least one of the foregoing.

12. The frustoconical member of claim **11**, wherein the frustoconical member is functionally graded such that the metal matrix includes an alloy and pure metal, wherein the amount of the alloy or pure metal varies along a dimension of the frustoconical member.

13. The frustoconical member of claim **1**, wherein the metallic nanomatrix material comprises aluminum, cobalt, copper, iron, magnesium, nickel, silicon, tungsten, zinc, an oxide thereof, a nitride thereof, a carbide thereof, an intermetallic compound thereof, a cermet thereof, or a combination comprising at least one of the foregoing.

14. The frustoconical member of claim **1**, wherein the amount of the metal nanomatrix material is about 10 wt % to about 50 wt %, based on the weight of the metal composite.

15. The frustoconical member of claim **1**, wherein the metal composite further comprises a disintegration agent.

16. The frustoconical member of claim **15** wherein the disintegration agent comprises cobalt, copper, iron, nickel, tungsten, or a combination comprising at least one of the foregoing.

17. The frustoconical member of claim **15**, wherein the frustoconical member is functionally graded such that an amount of the disintegration agent in the first frustoconical portion is less than an amount of the disintegration agent in another portion of the frustoconical member.

18. The frustoconical member of claim **1**, wherein the metal composite further includes a strengthening agent.

19. The frustoconical member of claim **18**, wherein the strengthening agent comprises a ceramic, polymer, metal, nanoparticles, cermet, or a combination comprising at least one of the foregoing.

20. The frustoconical member of claim **18**, wherein the frustoconical member is functionally graded such that an amount of the strengthening agent in the first frustoconical portion is greater than an amount of the strengthening agent in another portion of the frustoconical member.

21. The frustoconical member of claim **1**, wherein the frustoconical member is functionally graded such that the first frustoconical portion has a compressive strength which is greater than a compressive strength in another portion of the frustoconical member.

22. The frustoconical member of claim **1**, wherein the frustoconical member has a compressive strength of about 40 ksi to about 100 ksi.

23. The frustoconical member of claim **1**, wherein the frustoconical member is disintegrable in response to contact with a fluid.

24. The frustoconical member of claim **1**, wherein the fluid comprises brine, mineral acid, organic acid, or a combination comprising at least one of the foregoing.

25. The frustoconical member of claim **1**, wherein the frustoconical member has a disintegration rate of about 1 $mg/cm^2/hr$ to about 10,000 $mg/cm^2/hr$.

26. An article comprising the frustoconical member of claim **1**, wherein the article is a frac plug, bridge plug, bearing, flare fitting, valve stem, or sealing ring.

27. A process of making a frustoconical member, the process comprising:

combining a metal matrix powder, a disintegration agent, and metal nanomatrix material to form a composition;

compacting the composition to form a compacted composition;

sintering the compacted composition; and

pressing the sintered composition to form the frustoconical member having a tapered portion on an outer surface of the frustoconical member.

28. The process of claim **27**, further comprising disposing a strengthening agent in the composition before compacting the composition.

29. A method of using a frustoconical member, the method comprising:

contacting a frustoconical portion of the frustoconical member to a tapered surface of an article;

applying pressure to the frustoconical member;

urging the frustoconical member in a direction relative to the article to expand a radial dimension of the article; and

contacting the frustoconical member with a fluid to disintegrate the frustoconical member.

30. The process of claim **29**, wherein the frustoconical member comprises a metal composite which includes:

a cellular nanomatrix comprising a metallic nanomatrix material; and

a metal matrix disposed in the cellular nanomatrix.

* * * * *