US 20030167924A1

(19) United States

(12) Patent Application Publication

McCombs et al.

(10) Pub. No.: US 2003/0167924 A1

(43) Pub. Date: Sep. 11, 2003

(54) PORTABLE OXYGEN CONCENTRATOR

(76) Inventors: **Norman R. McCombs**, Tonawanda, NY (US); **Robert E. Casey**, Buffalo, NY (US); **Michael A. Chimiak**, Williamsville, NY (US); **Andrzej Klimaszewski**, Jacksonville, FL (US)

Correspondence Address:
Ronald S. Kareken, Esq.
JAECKLE FLEISCHMANN & MUGEL, LLP
39 State Street
Rochester, NY 14614-1310 (US)

(21) Appl. No.: **10/354,275**

(22) Filed: **Jan. 30, 2003**

Related U.S. Application Data

(60) Provisional application No. 60/353,563, filed on Jan. 31, 2002.

Publication Classification

(51) **Int. Cl.**[7] **B01D 53/02**

(52) **U.S. Cl.** **96/121**; 96/128; 96/111

(57) **ABSTRACT**

A compact and highly portable combination pressure swing adsorption apparatus and product gas conservation device for medical use, to produce efficiently a gas with a high concentration of oxygen and to deliver the oxygen concentrated gas to a user at selectable times and in selectable doses.

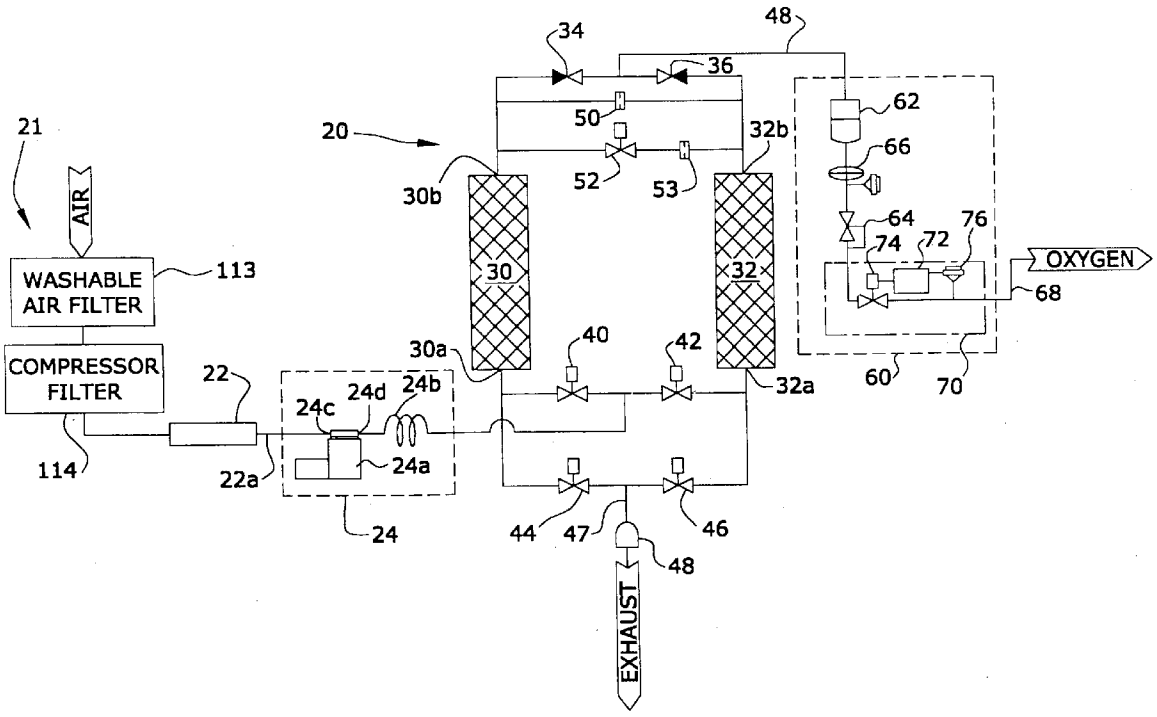

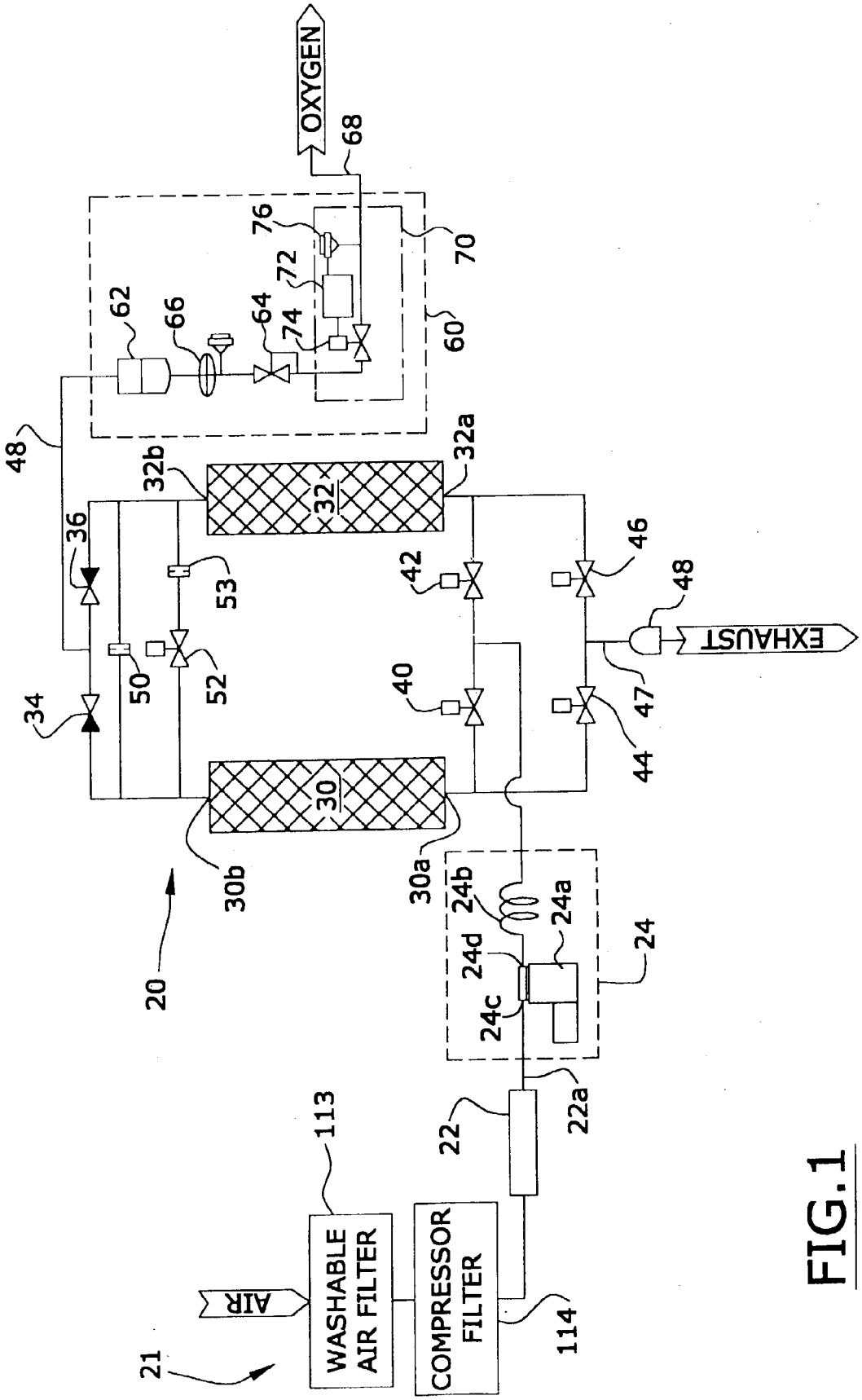
OXYGEN
68
76
72
70
62
66
64
74
60
48
32b
32a
32
36
53
42
46
48
EXHAUST
50
52
40
47
34
44
30
30b
30a
24b
24a
24d
24
24c
20
22
22a
113
WASHABLE AIR FILTER
COMPRESSOR FILTER
AIR
114
21

FIG. 1

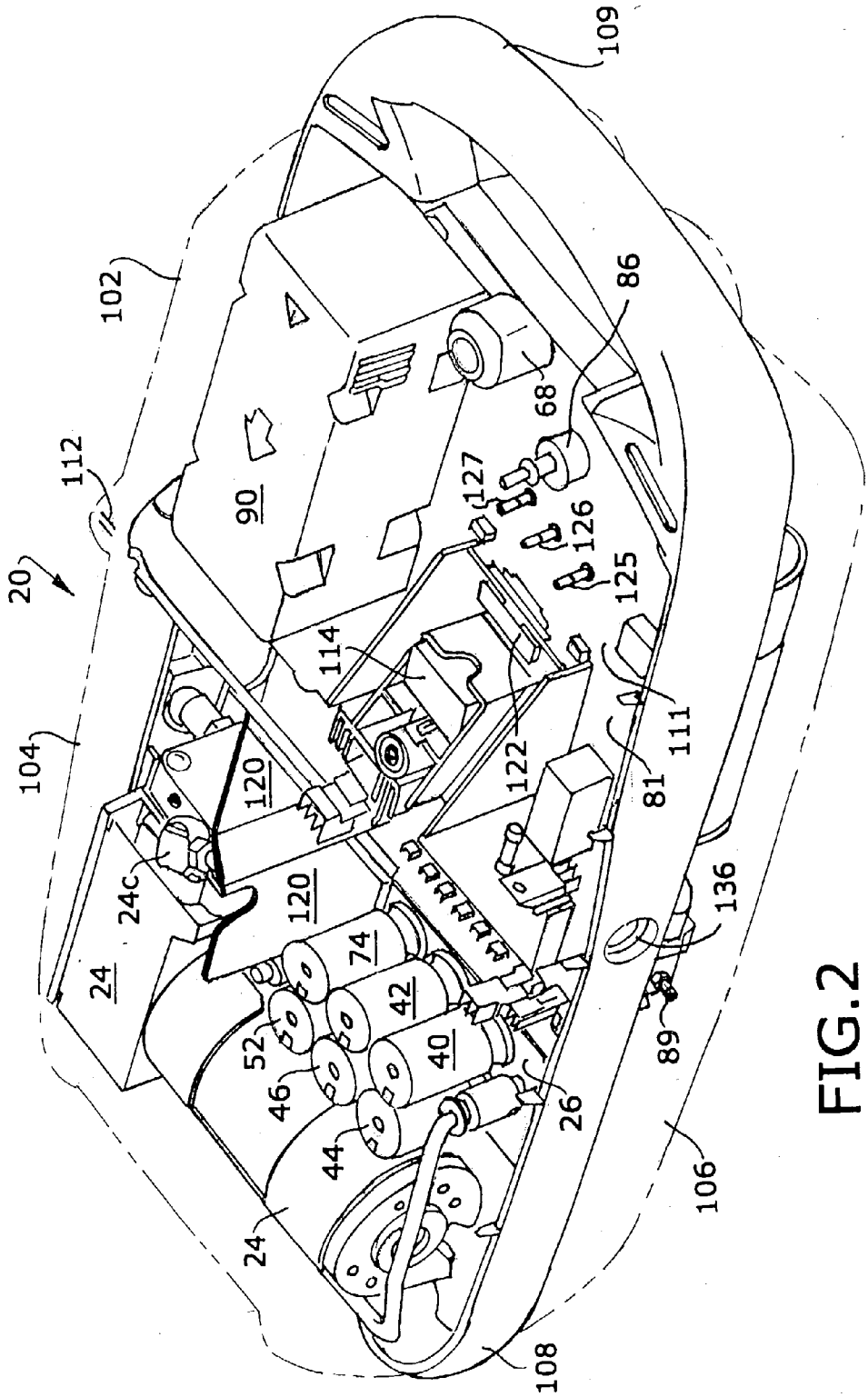
109
102
86
68
112
90
127
126
125
20
114
104
122
111
81
120
24c
120
136
74
24
42
52
40
89
46
26
44
106
24
108

FIG.2

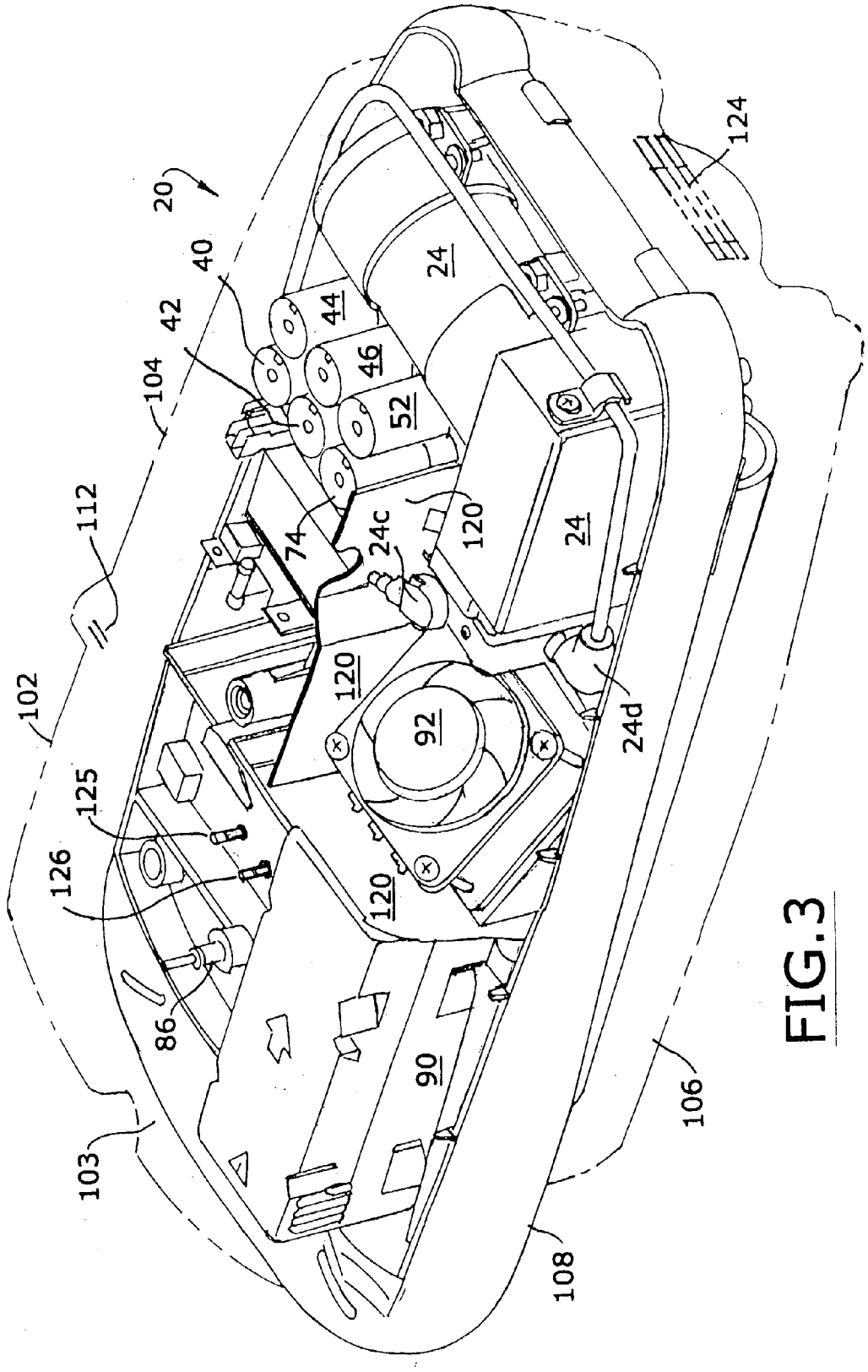
20
40
42
104
112
102
125
126
86
103
44
46
52
74
24c
120
120
120
92
90
24
24
24d
124
106
108

FIG. 3

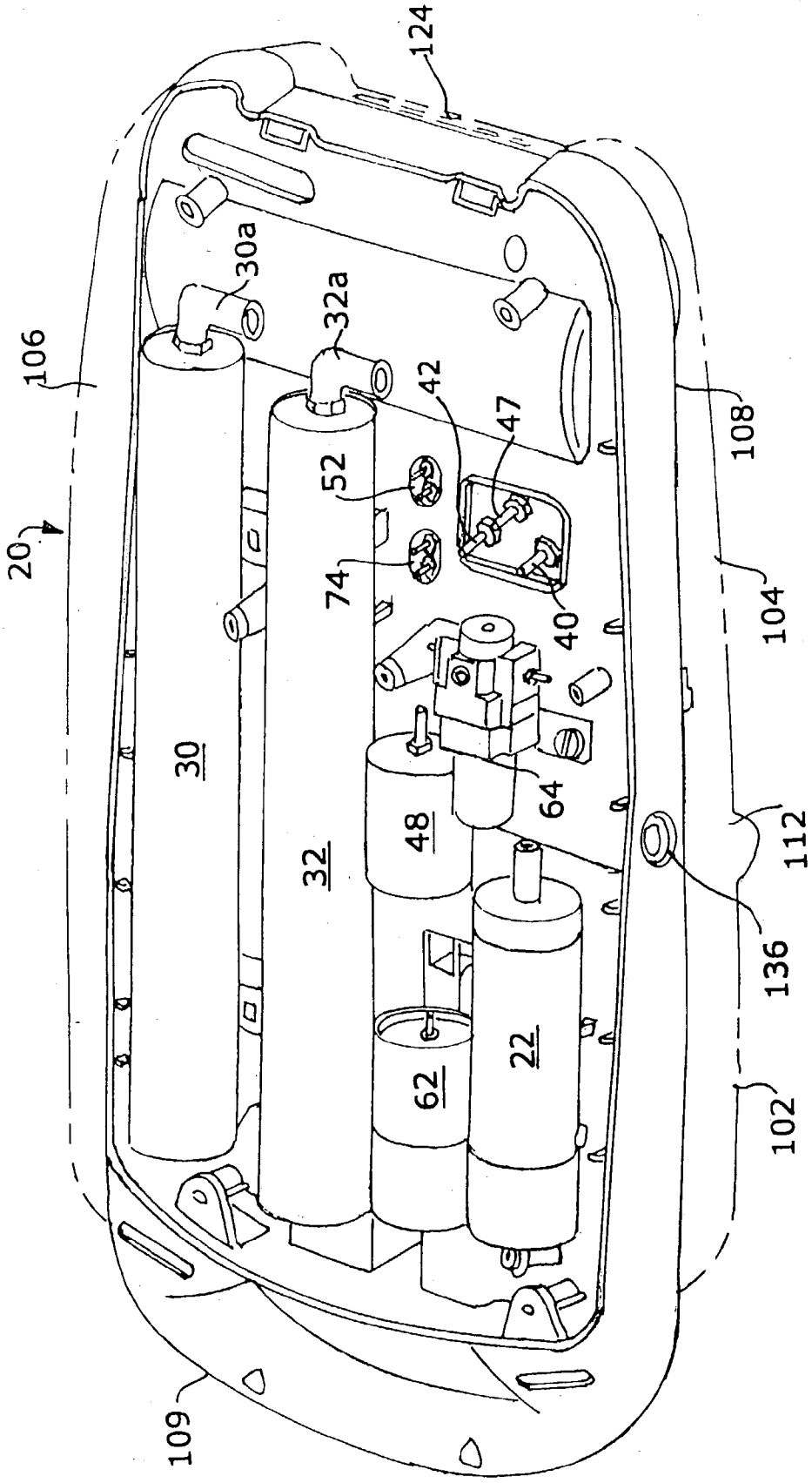
124
30a
32a
106
42
47
108
52
20
74
40
104
30
64
48
32
112
136
22
62
102
109

FIG.4

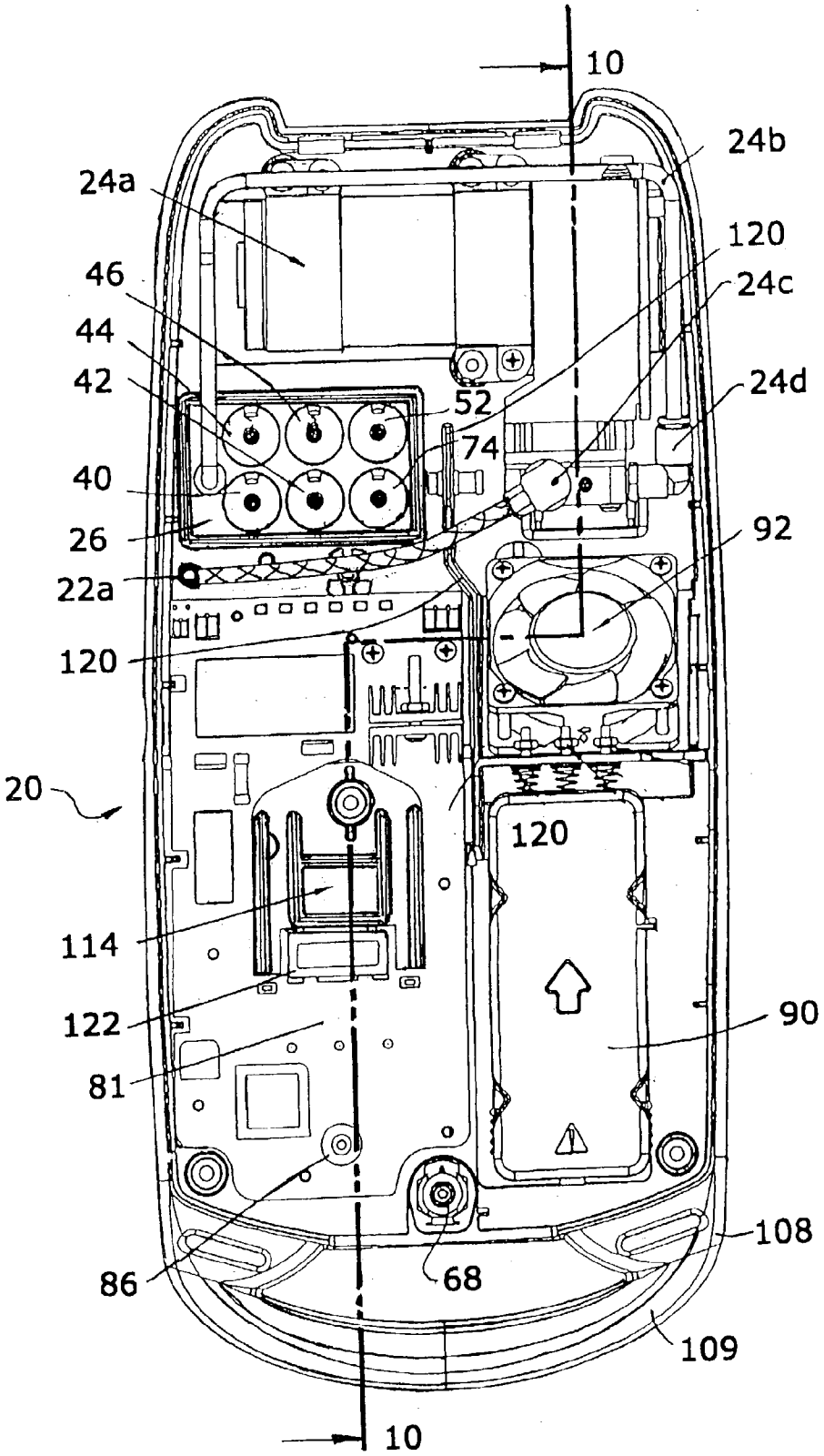
10
24b
24a
120
46
24c
44
42
52
24d
74
40
26
92
22a
120
20
120
114
122
90
81
108
86
68
109
10

FIG.5

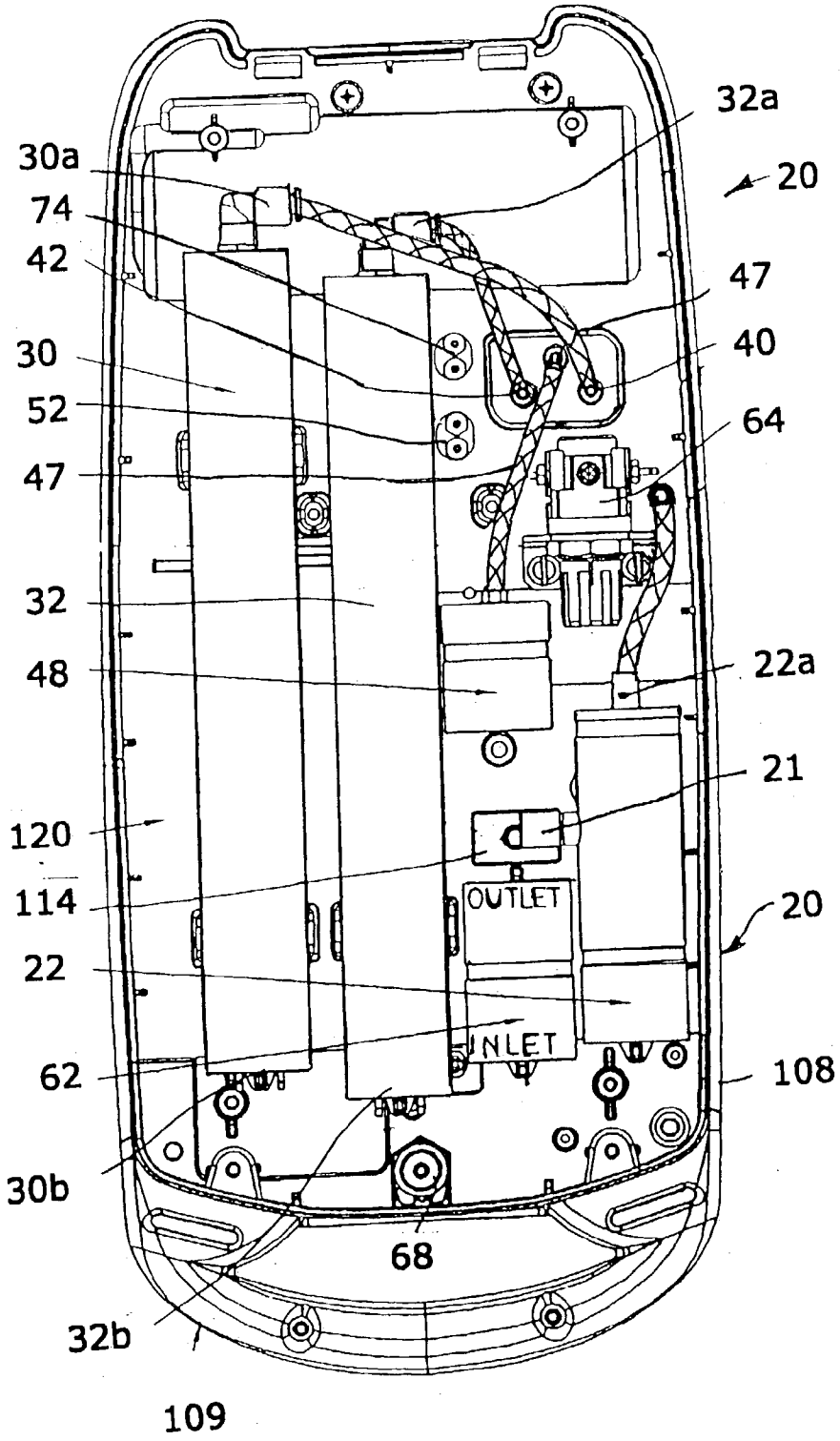
32a
30a
20
74
42
47
30
40
52
64
47
32
48
22a
21
120
114
OUTLET
20
22
INLET
62
108
30b
68
32b
109

FIG.6

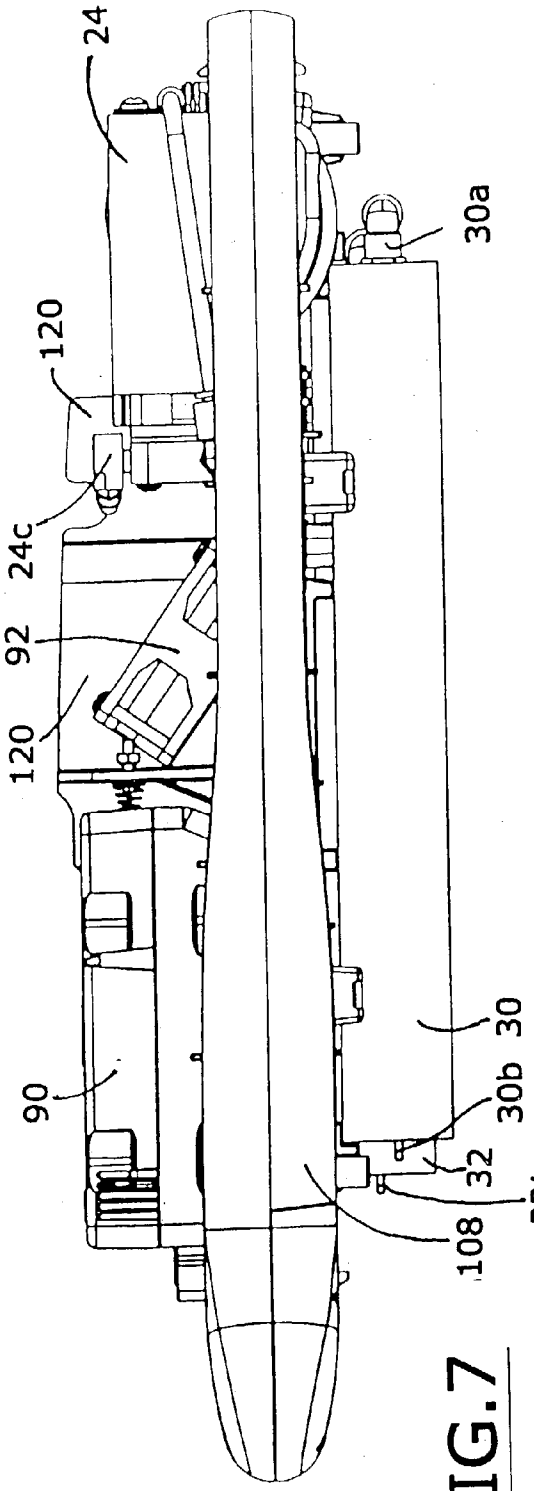
24
120
24c
92
120
90
30a
30
30b
32
32b
108

FIG.7

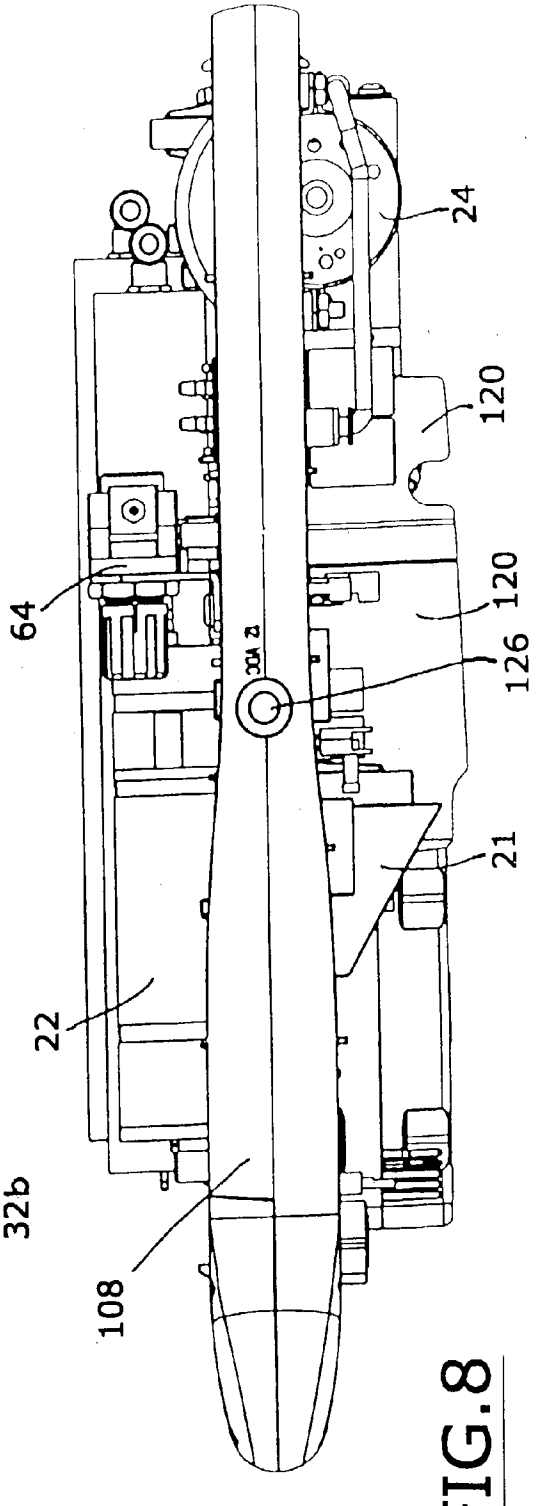
24
120
120
126
64
21
22
108

FIG.8

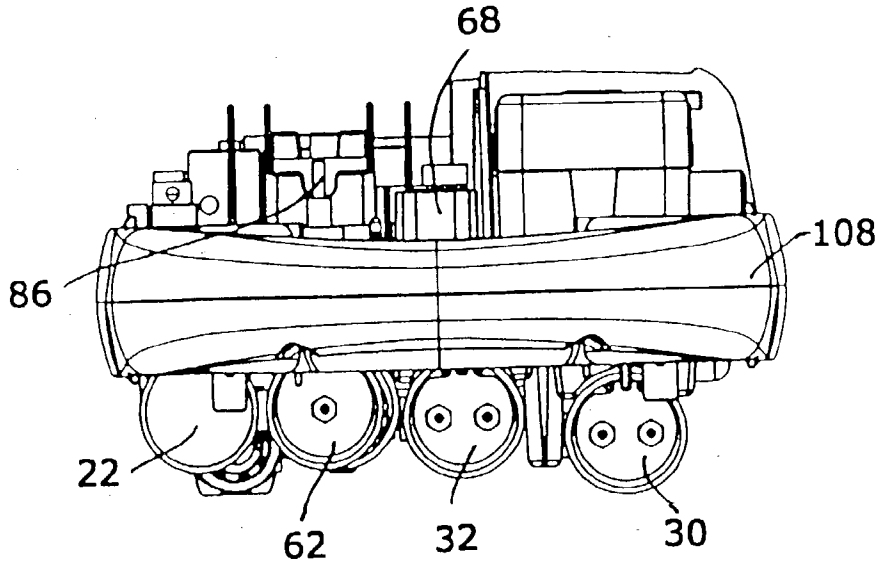
68
108
86
22
62
32
30

FIG.9

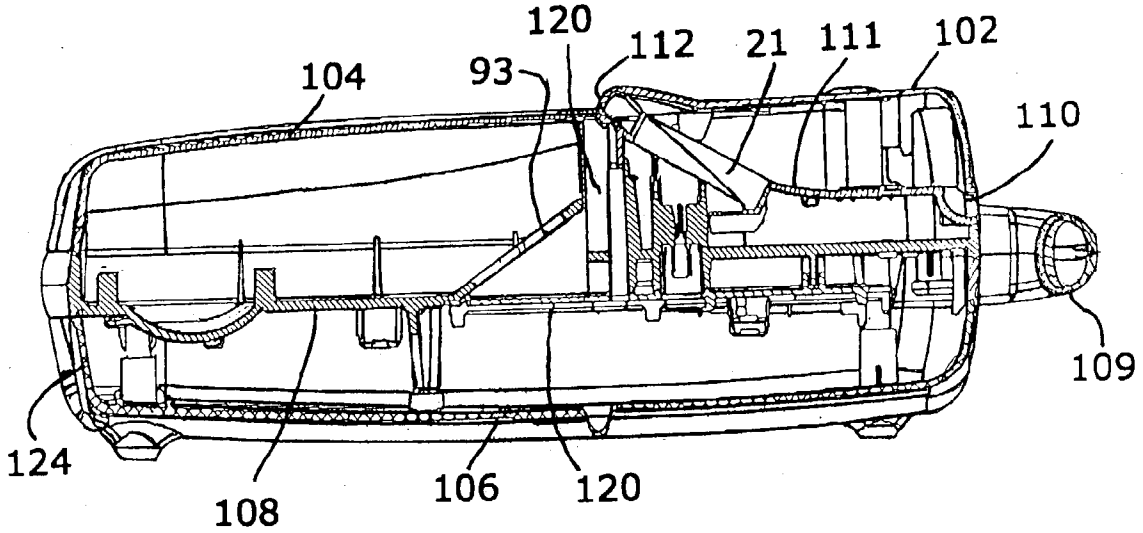
120
112
21
111
102
104
93
110
109
124
108
106
120

FIG.10

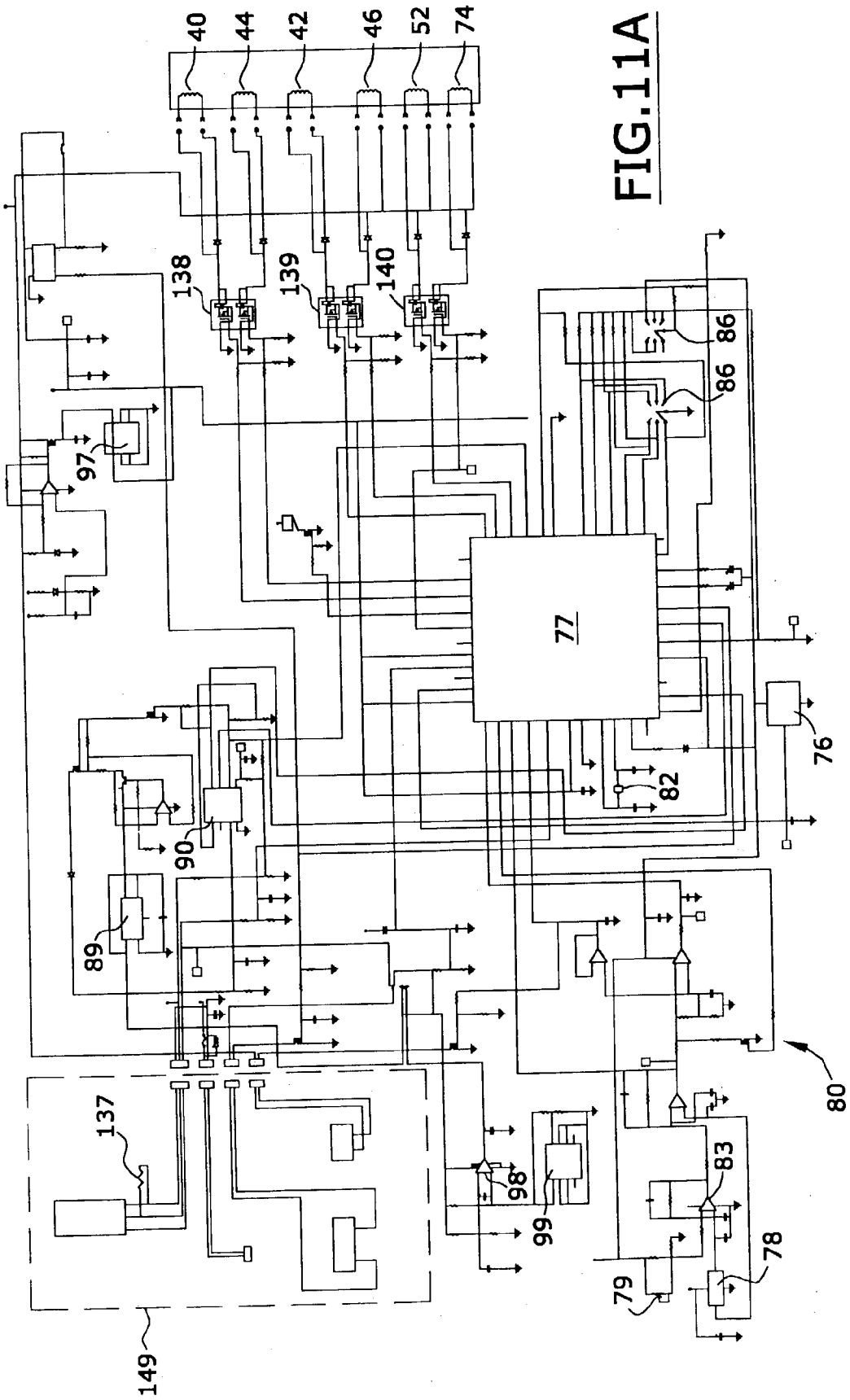
40
44
42
46
52
74
138
139
140
86
86
97
77
76
82
90
89
80
137
83
98
99
78
79
149

FIG.11A

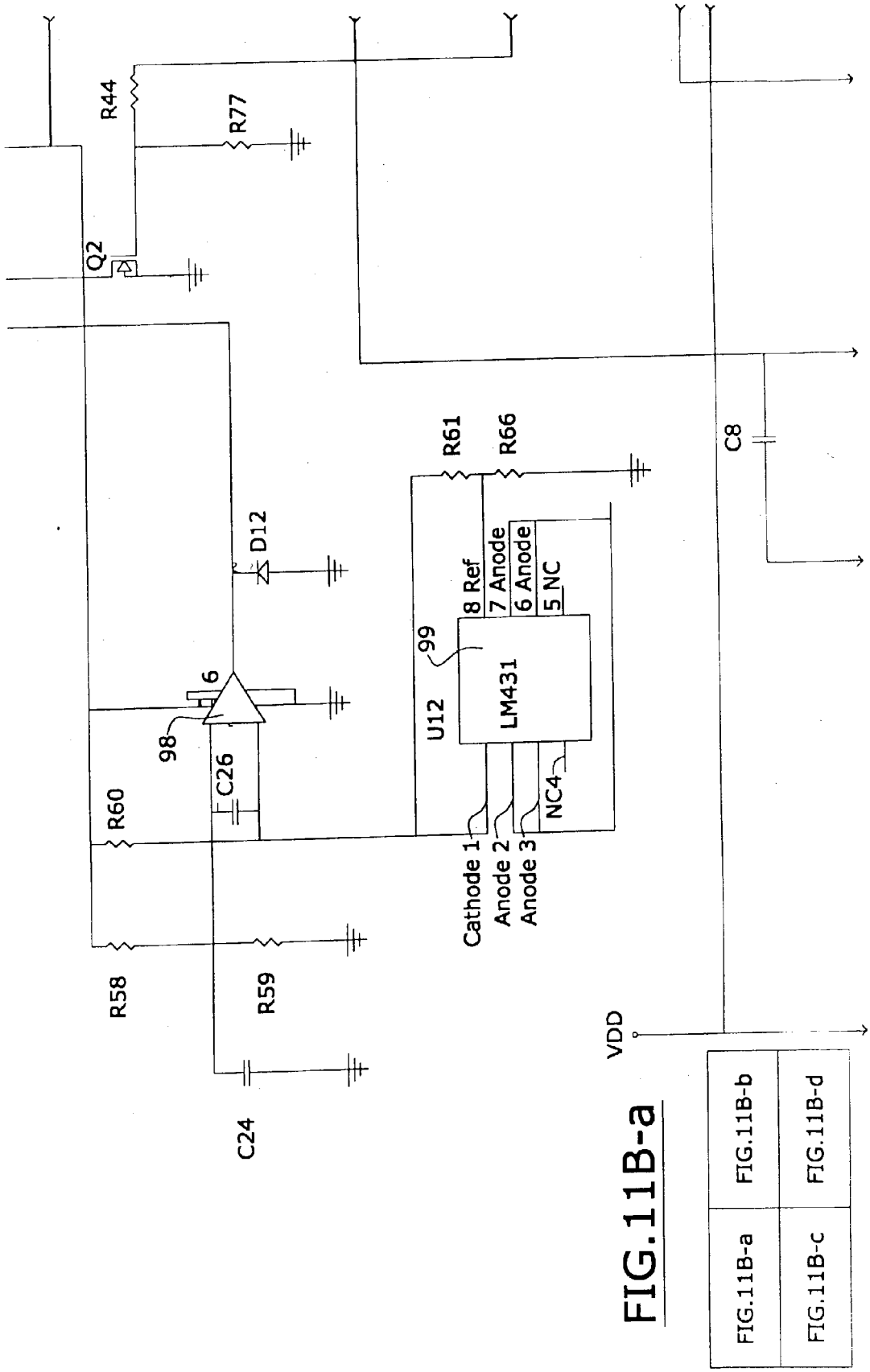
R44
R77
Q2
D12
6
98
C26
R60
R58
R59
C24
R61
R66
U12
99
LM431
8 Ref
7 Anode
6 Anode
5 NC
NC4
Cathode 1
Anode 2
Anode 3
C8
VDD
FIG.11B-a
FIG.11B-a
FIG.11B-b
FIG.11B-c
FIG.11B-d

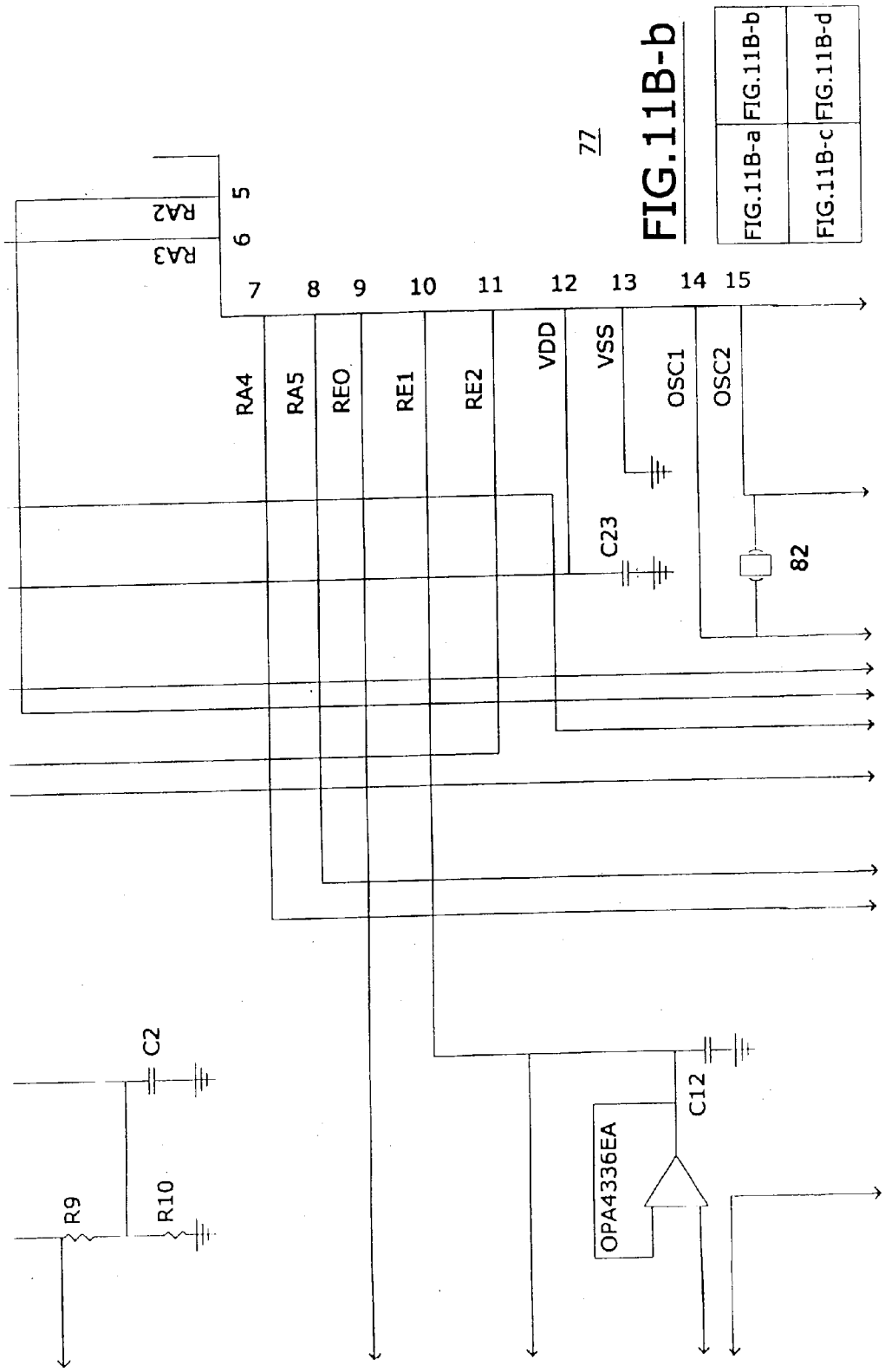
77
FIG.11B-b
FIG.11B-a
FIG.11B-b
FIG.11B-c
FIG.11B-d
RA3
RA2
5
6
7
8
9
10
11
12
13
14
15
RA4
RA5
REO
RE1
RE2
VDD
VSS
OSC1
OSC2
C23
82
C2
R9
R10
OPA4336EA
C12

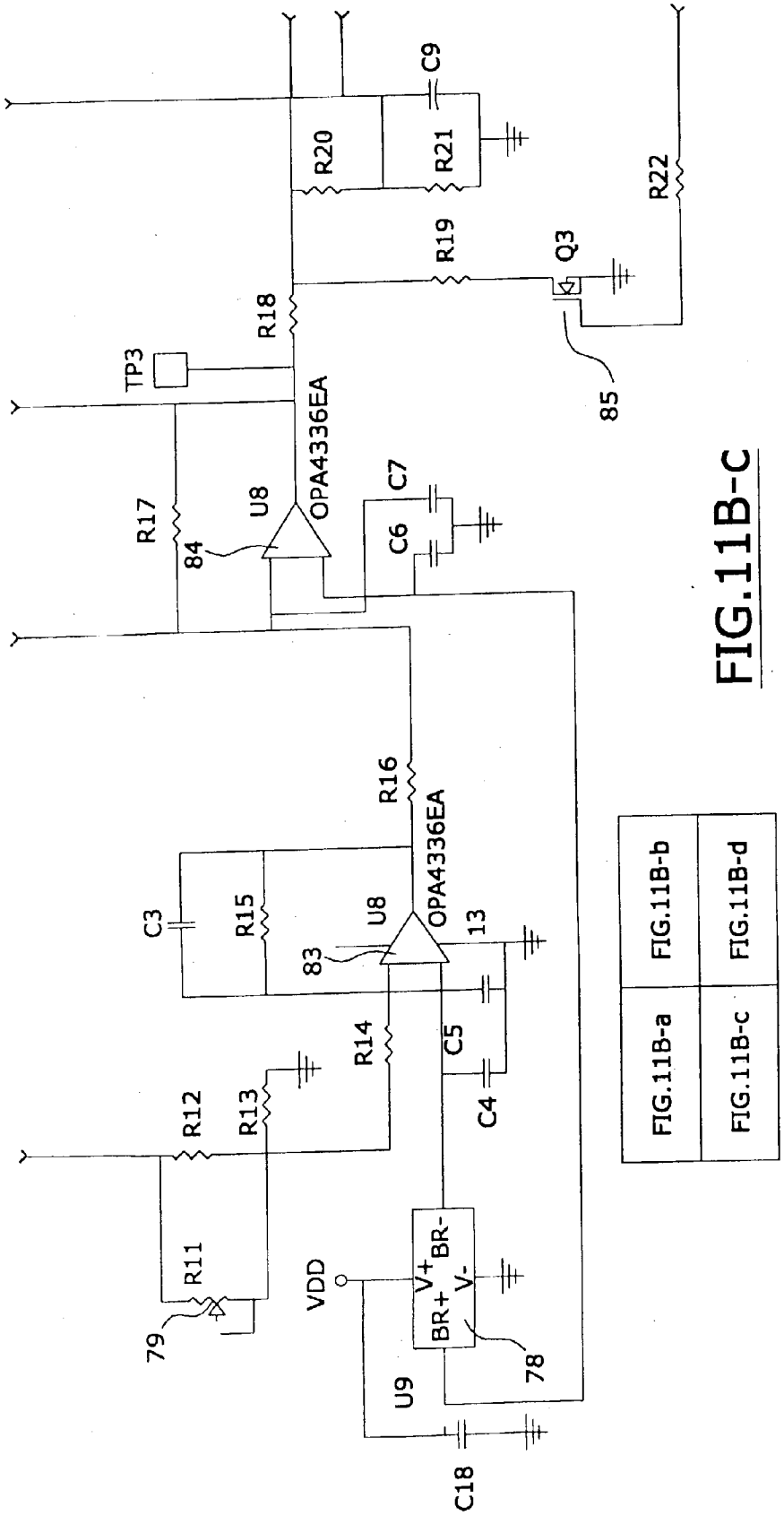
C9
R20
R21
R22
R19
Q3
R18
TP3
85
OPA4336EA
R17
U8
84
C7
C6
R16
OPA4336EA
C3
R15
U8
83
13
R14
C5
C4
R12
R13
R11
79
VDD
V+
BR-
BR+
V-
78
U9
C18
FIG.11B-a
FIG.11B-b
FIG.11B-c
FIG.11B-d

FIG.11B-C

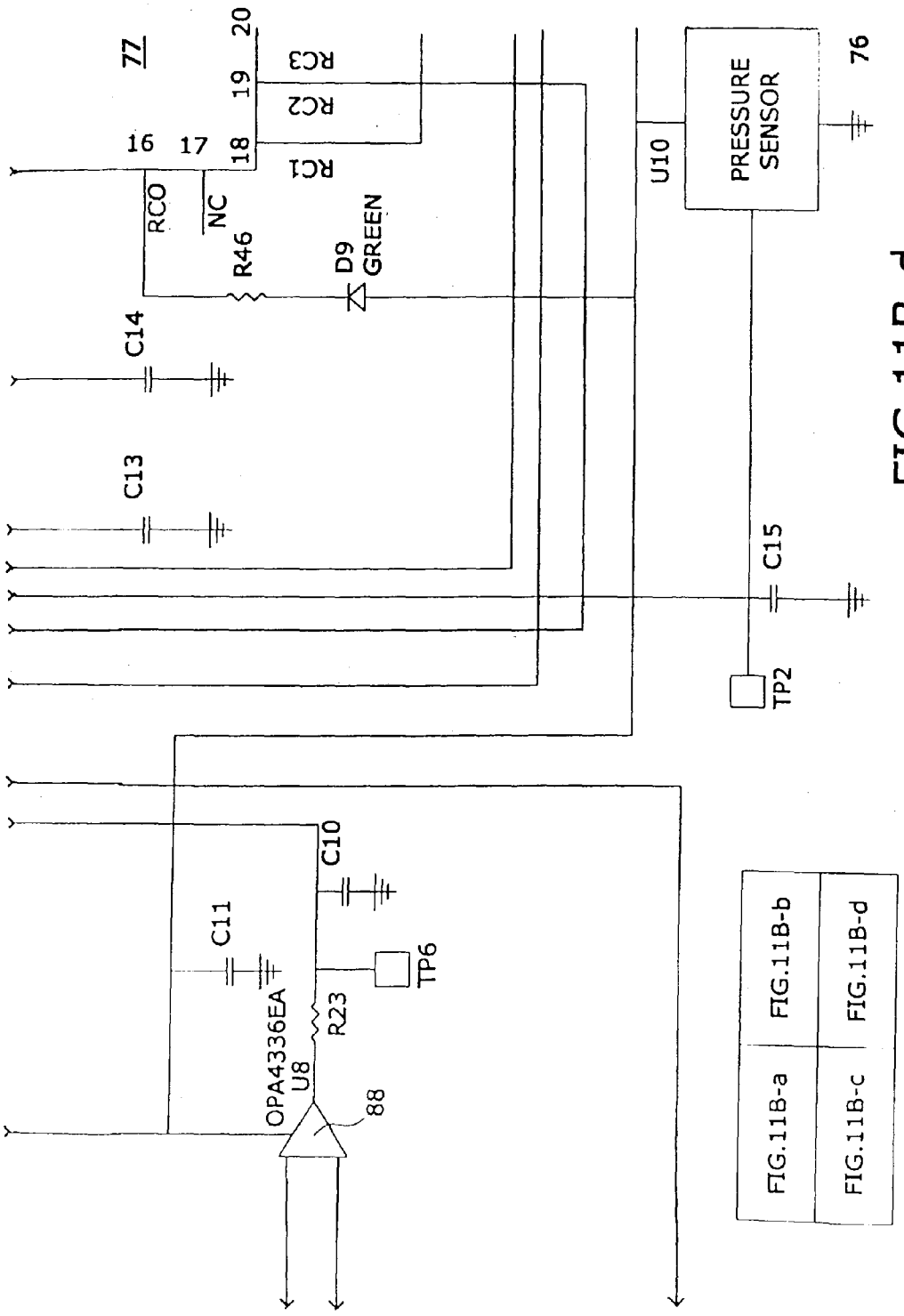
77
20
19
18
16
17
RC3
RC2
RC1
RCO
NC
R46
D9
GREEN
C14
C13
U10
PRESSURE
SENSOR
76
C15
TP2
C10
C11
TP6
R23
OPA4336EA
U8
88
FIG.11B-a
FIG.11B-b
FIG.11B-c
FIG.11B-d

FIG.11B-d

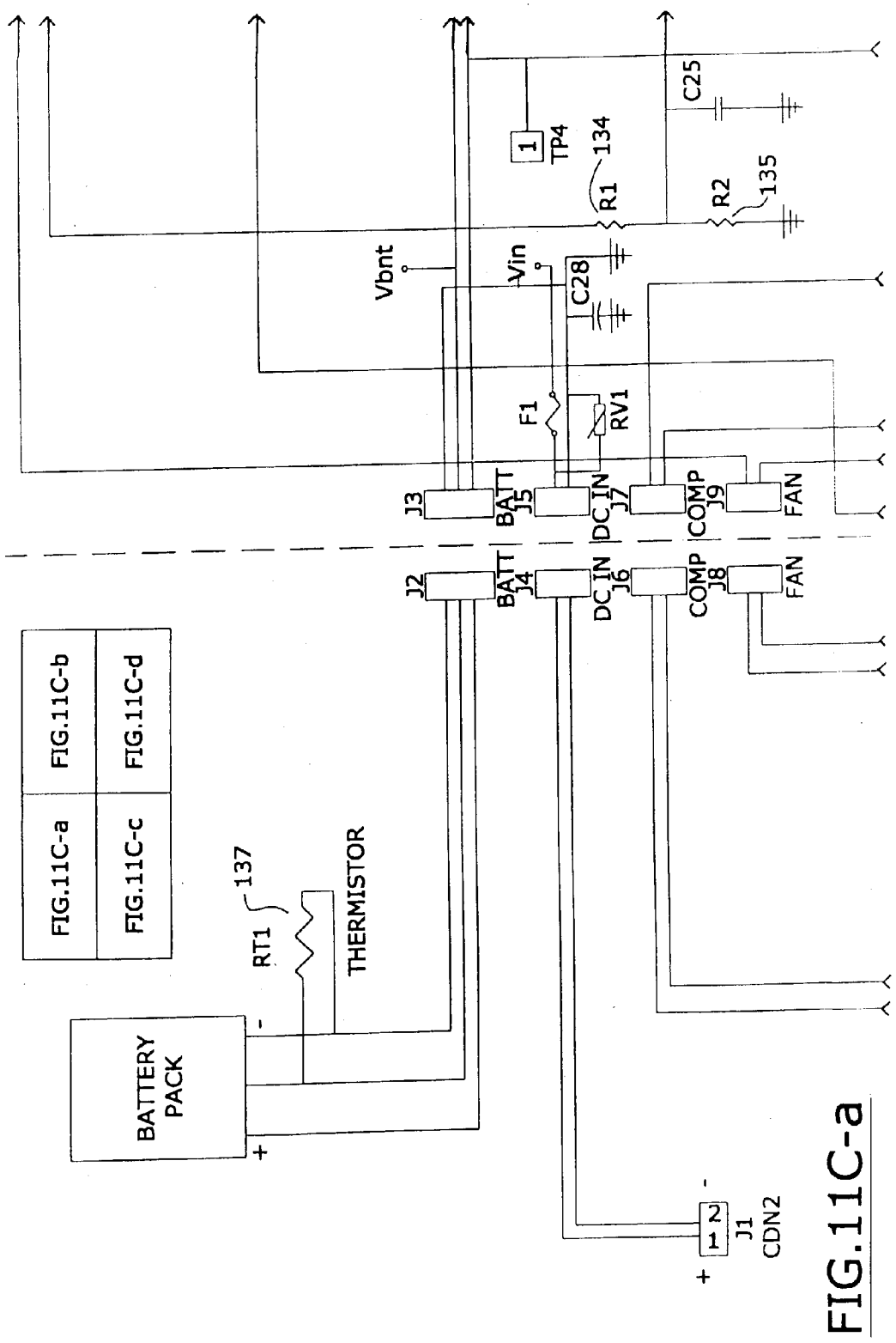
FIG.11C-a
FIG.11C-b
FIG.11C-c
FIG.11C-d
BATTERY PACK
RT1
137
THERMISTOR
J1
CDN2
J2
J3
BATT J4
BATT J5
DC IN J6
DC IN J7
COMP J8
COMP J9
FAN
FAN
F1
RV1
C28
Vbnt
Vin
R1
134
R2
135
TP4
C25

FIG.11C-a

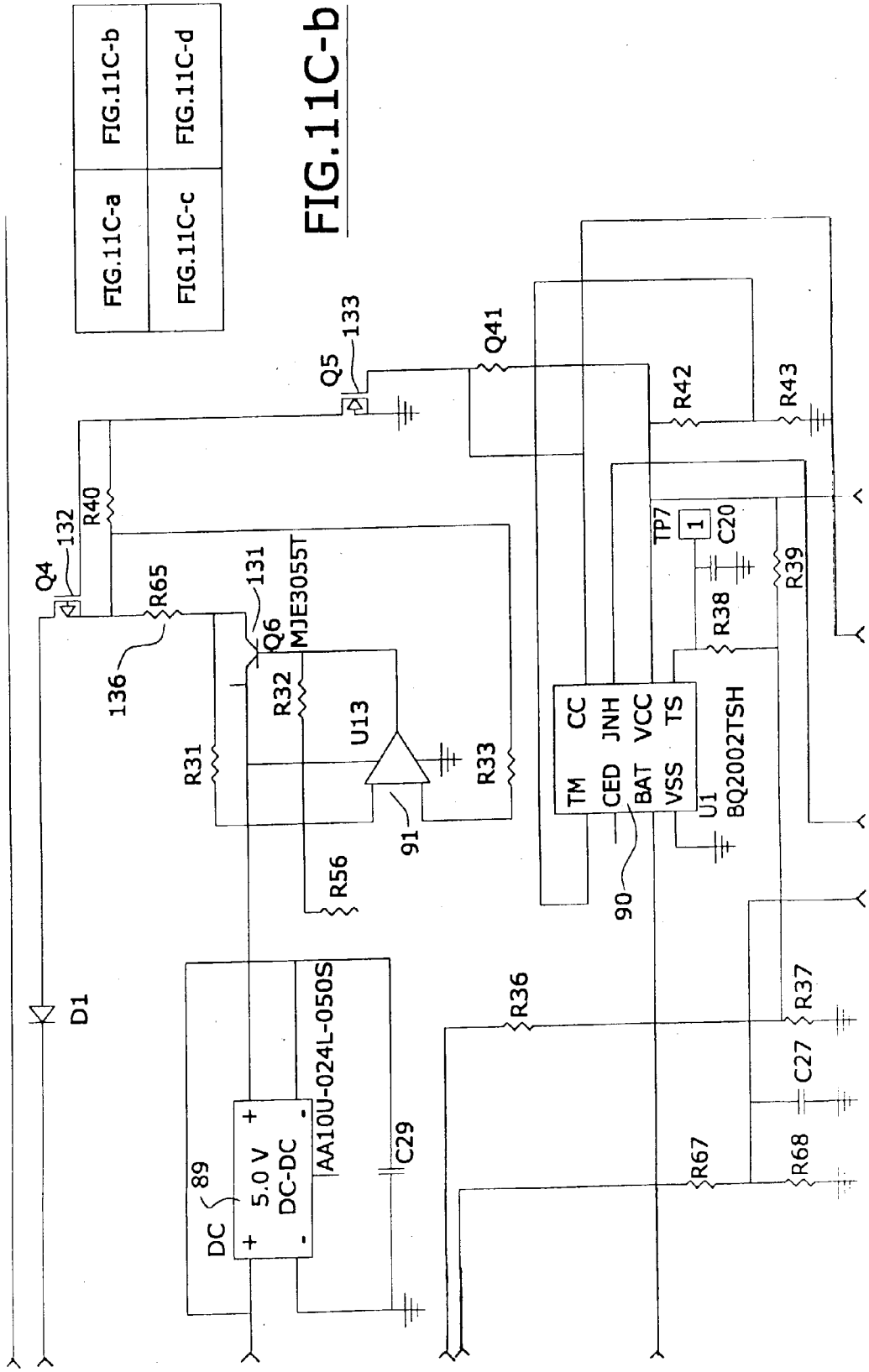
FIG.11C-a
FIG.11C-b
FIG.11C-c
FIG.11C-d
Q4
132
R40
R65
136
131
Q6
MJE3055T
R32
U13
R31
R33
91
R56
Q5
133
Q41
R42
R43
TP7
1
C20
R39
R38
CC
JNH
VCC
TS
TM
CED
BAT
VSS
U1
BQ2002TSH
90
D1
AA10U-024L-050S
5.0 V
DC-DC
DC
89
C29
R36
R37
C27
R67
R68

FIG.11C-b

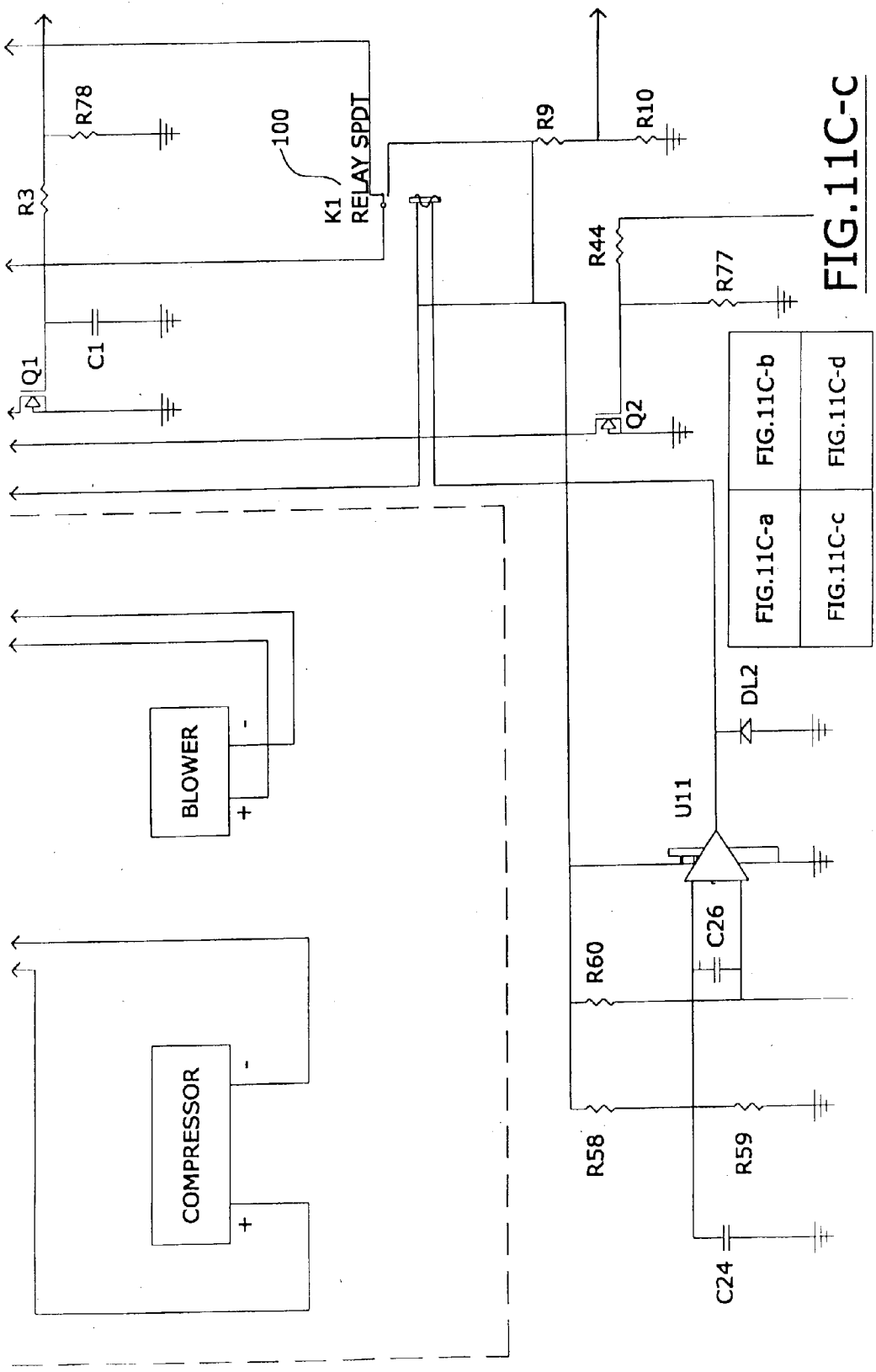
R78
R3
100
K1
RELAY SPDT
R9
R10
R44
R77
Q1
C1
Q2
FIG.11C-a
FIG.11C-b
FIG.11C-c
FIG.11C-d
BLOWER
DL2
U11
C26
R60
COMPRESSOR
R58
R59
C24

FIG.11C-C

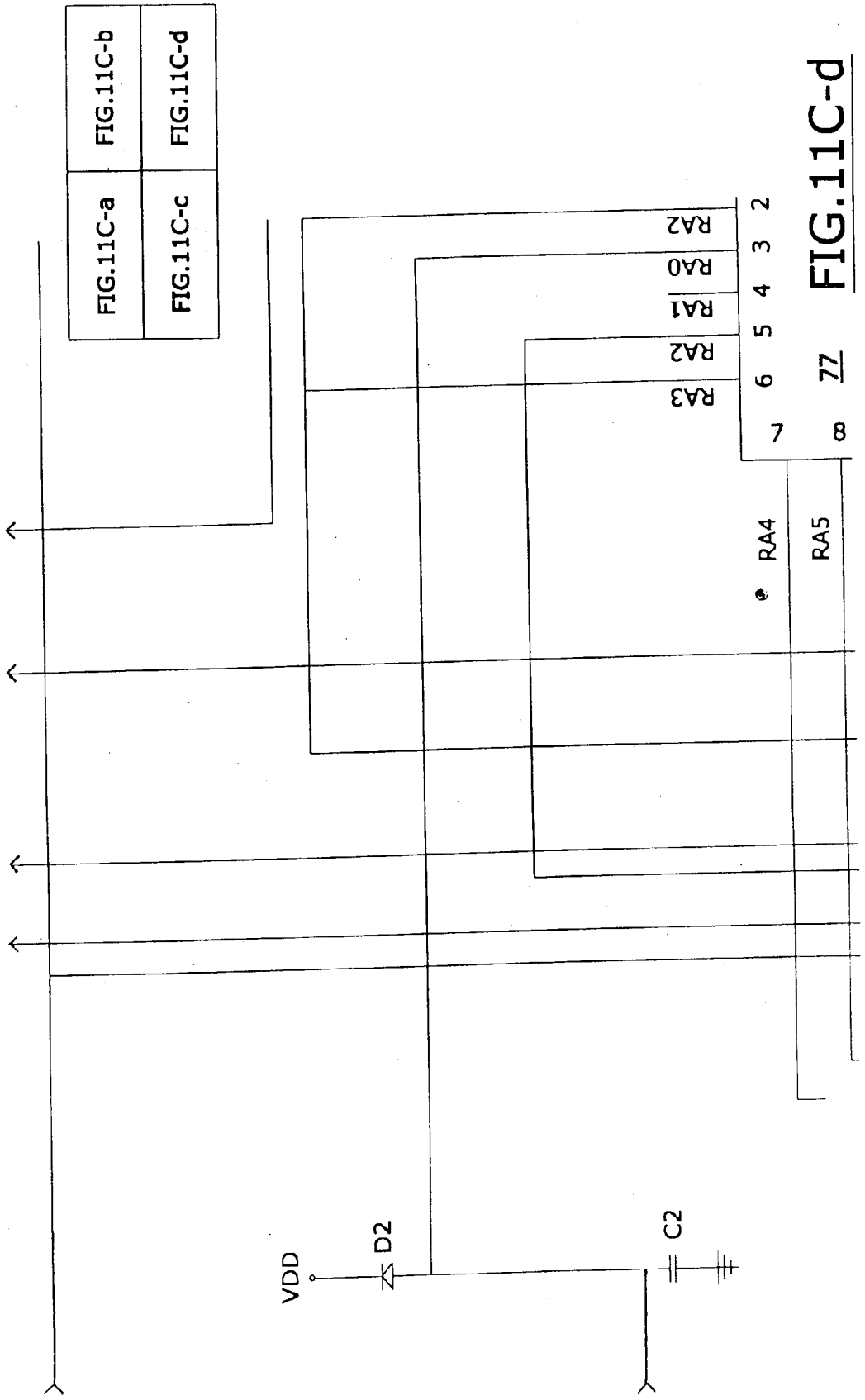
FIG.11C-a
FIG.11C-b
FIG.11C-c
FIG.11C-d
RA2
RA0
RA1
RA2
RA3
2
3
4
5
6
7
8
77
RA4
RA5
VDD
D2
C2

FIG.11C-d

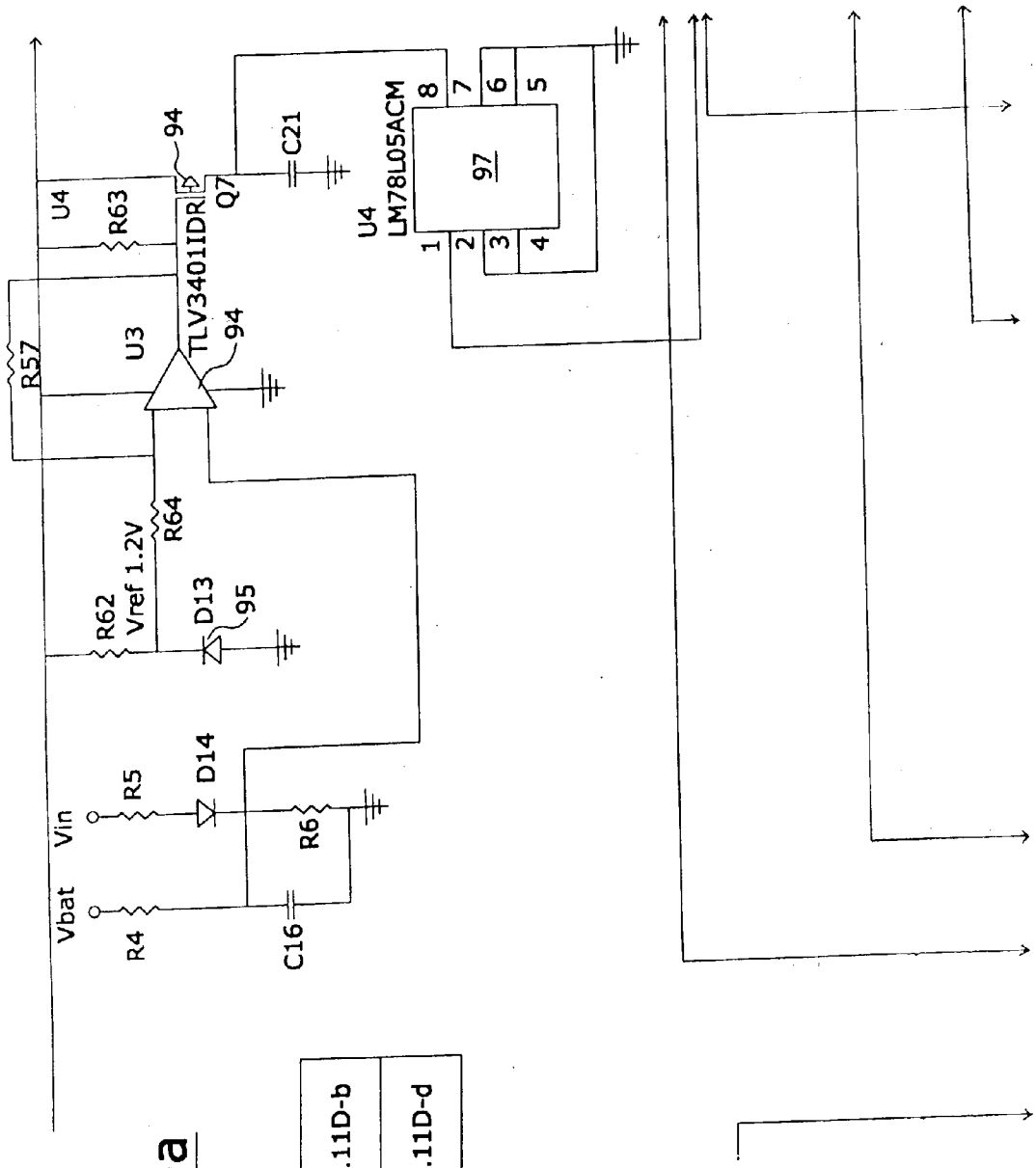

FIG.11D-a

FIG.11D-a	FIG.11D-b
FIG.11D-c	FIG.11D-d

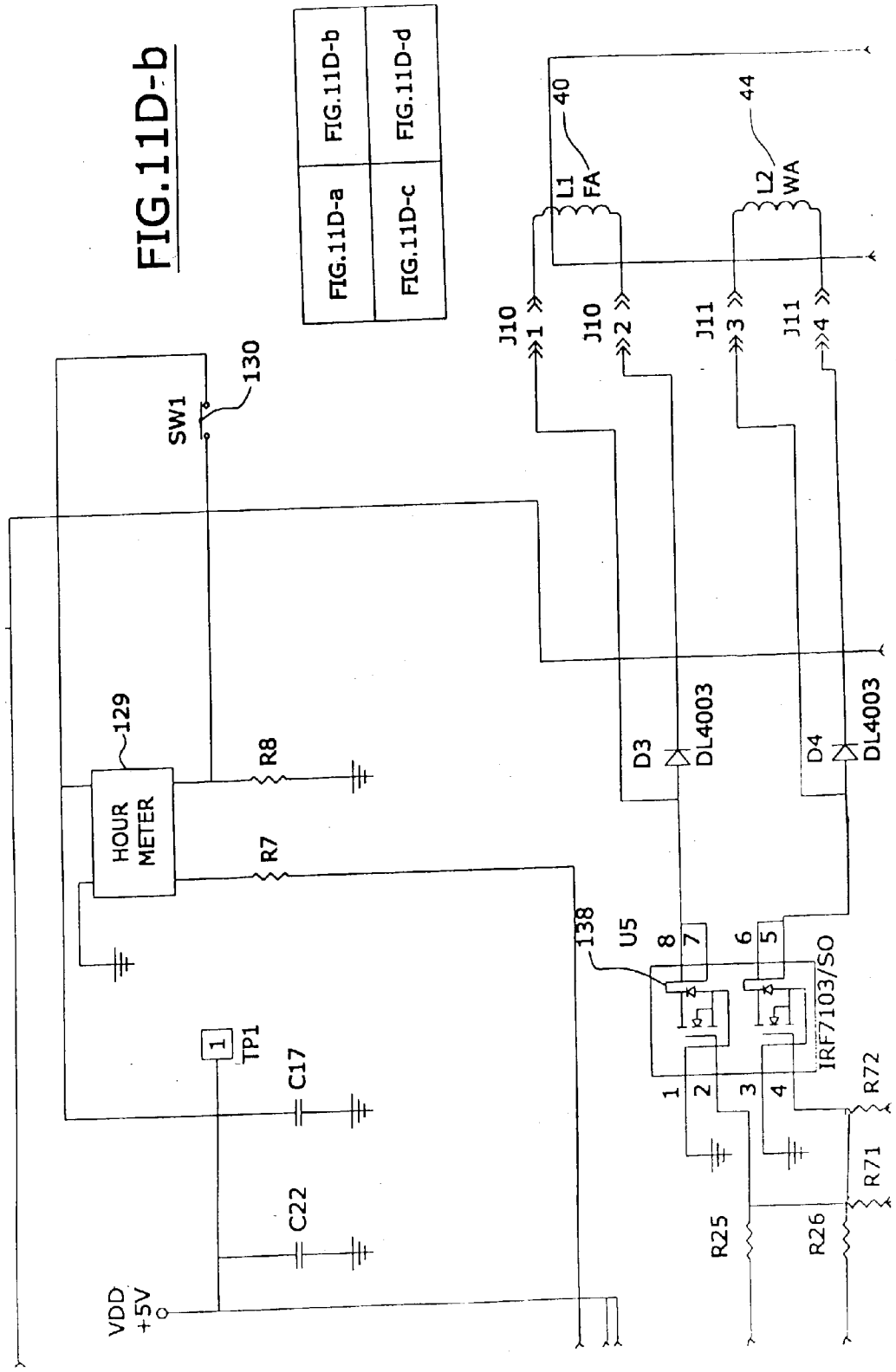
FIG.11D-b
FIG.11D-a
FIG.11D-b
FIG.11D-c
FIG.11D-d
SW1
130
129
HOUR METER
R8
R7
TP1
C17
C22
VDD +5V
138
U5
IRF7103/SO
D3
DL4003
D4
DL4003
J10
J10
J11
J11
L1 FA
40
L2 WA
44
R25
R26
R71
R72

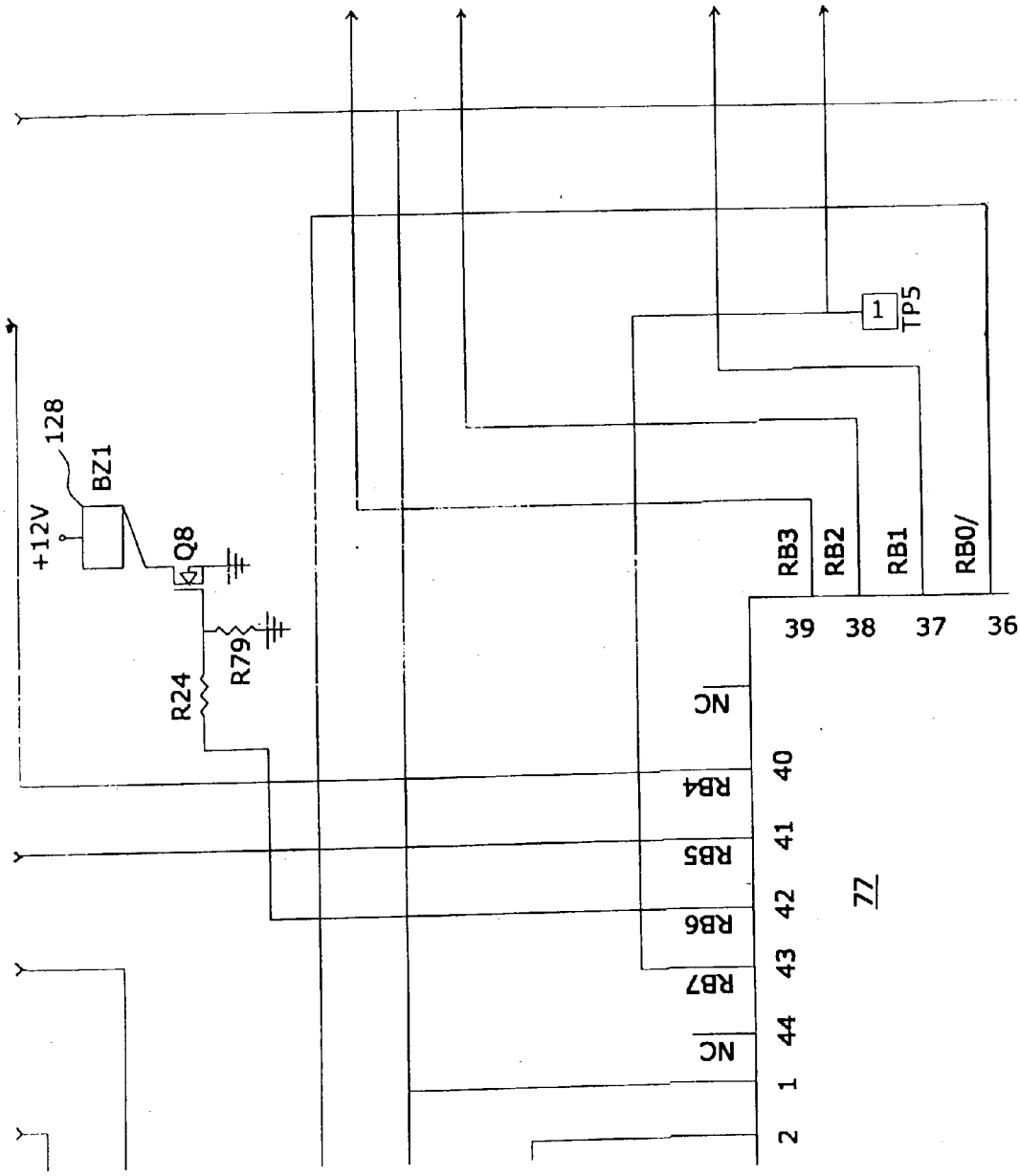

FIG.11D-a	FIG.11D-b
FIG.11D-c	FIG.11D-d

FIG.11D-c

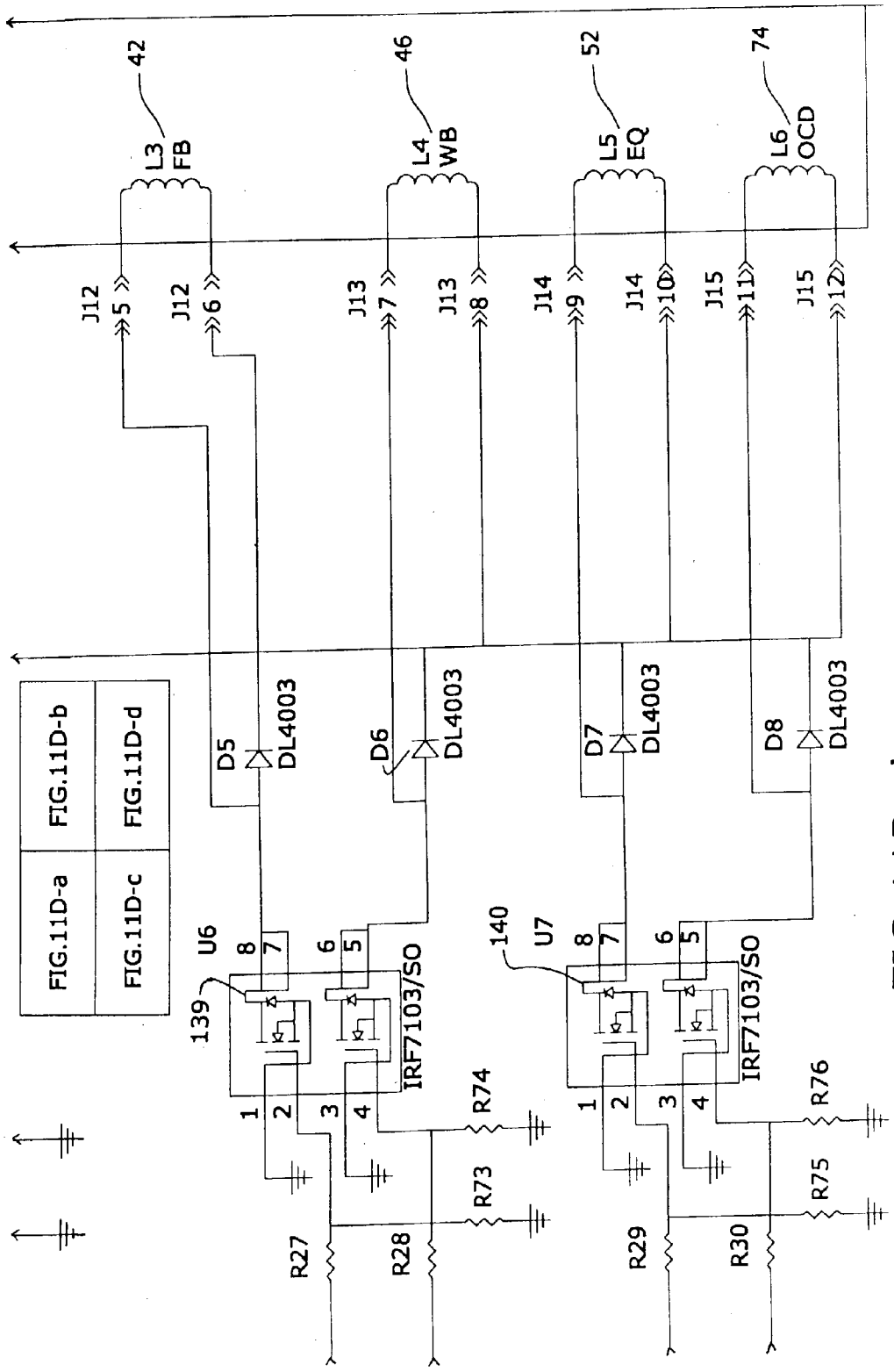
42
L3
FB
46
L4
WB
52
L5
EQ
74
L6
OCD
J12
5
J12
6
J13
7
J13
8
J14
9
J14
10
J15
11
J15
12
FIG.11D-a
FIG.11D-b
FIG.11D-c
FIG.11D-d
D5
DL4003
D6
DL4003
D7
DL4003
D8
DL4003
U6
139
IRF7103/SO
U7
140
IRF7103/SO
R74
R73
R76
R75
R27
R28
R29
R30

FIG.11D-d

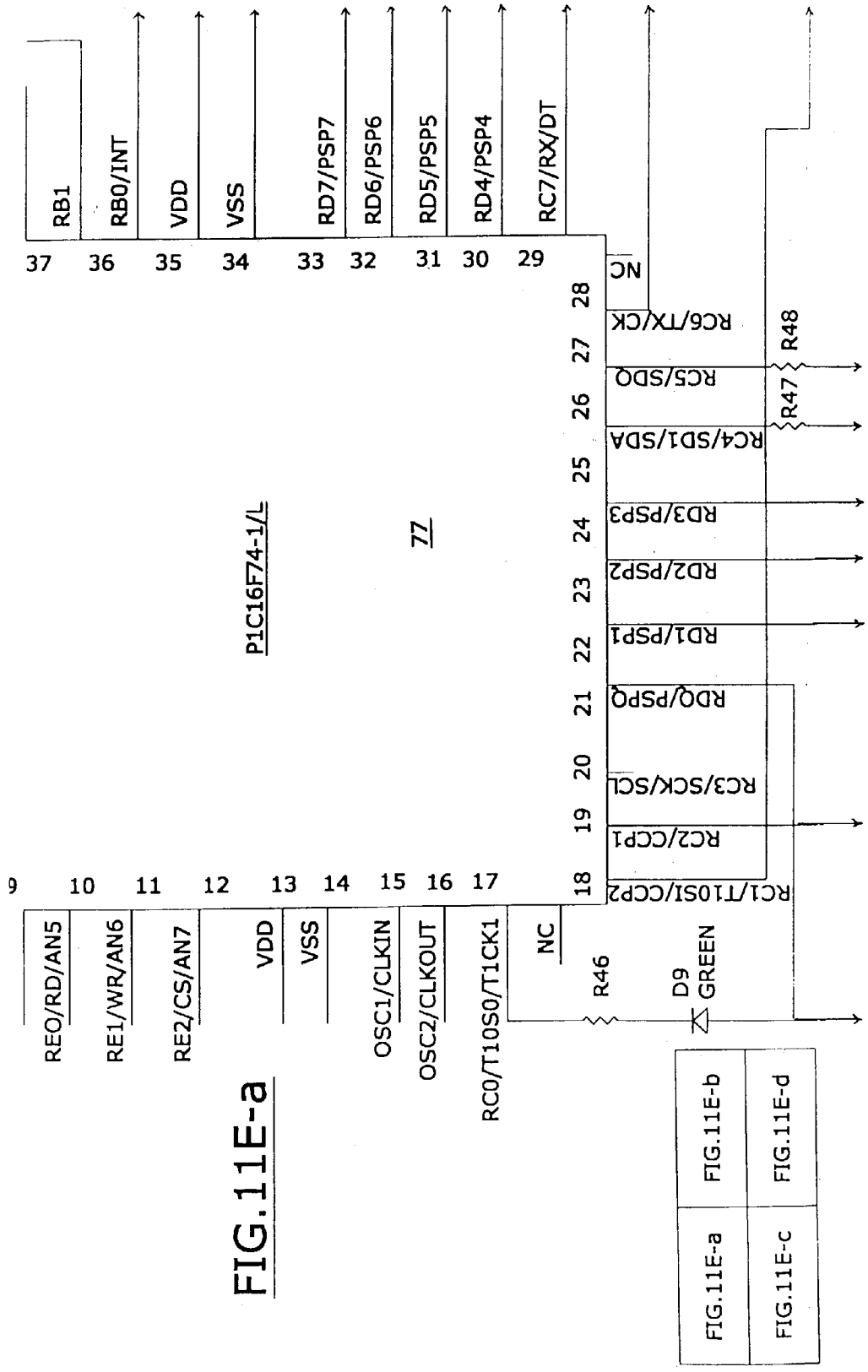
P1C16F74-1/L
77
RB1
RB0/INT
VDD
VSS
RD7/PSP7
RD6/PSP6
RD5/PSP5
RD4/PSP4
RC7/RX/DT
NC
RC6/TX/CK
RC5/SDO
RC4/SD1/SDA
RD3/PSP3
RD2/PSP2
RD1/PSP1
RD0/PSP0
RC3/SCK/SCL
RC2/CCP1
RC1/T1OSI/CCP2
RE0/RD/AN5
RE1/WR/AN6
RE2/CS/AN7
VDD
VSS
OSC1/CLKIN
OSC2/CLKOUT
RC0/T1OS0/T1CK1
NC
R46
D9
GREEN
R47
R48
37 36 35 34 33 32 31 30 29 28 27 26 25 24 23 22 21 20 19 18
9 10 11 12 13 14 15 16 17
FIG.11E-a
FIG.11E-b
FIG.11E-d
FIG.11E-a
FIG.11E-c

FIG.11E-b

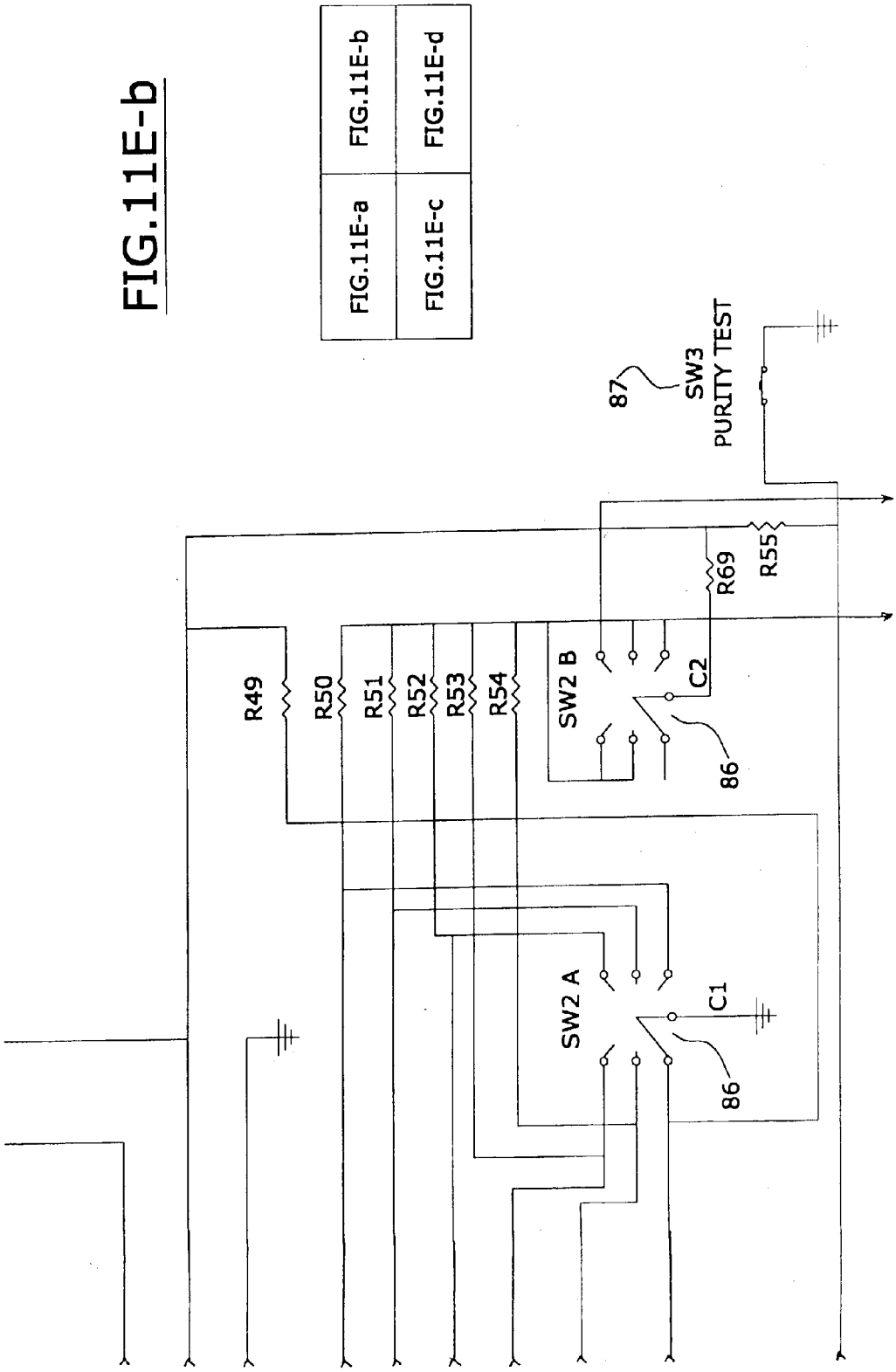
FIG.11E-a
FIG.11E-b
FIG.11E-c
FIG.11E-d
87
SW3
PURITY TEST
R49
R50
R51
R52
R53
R54
R69
R55
SW2 B
C2
86
SW2 A
C1
86

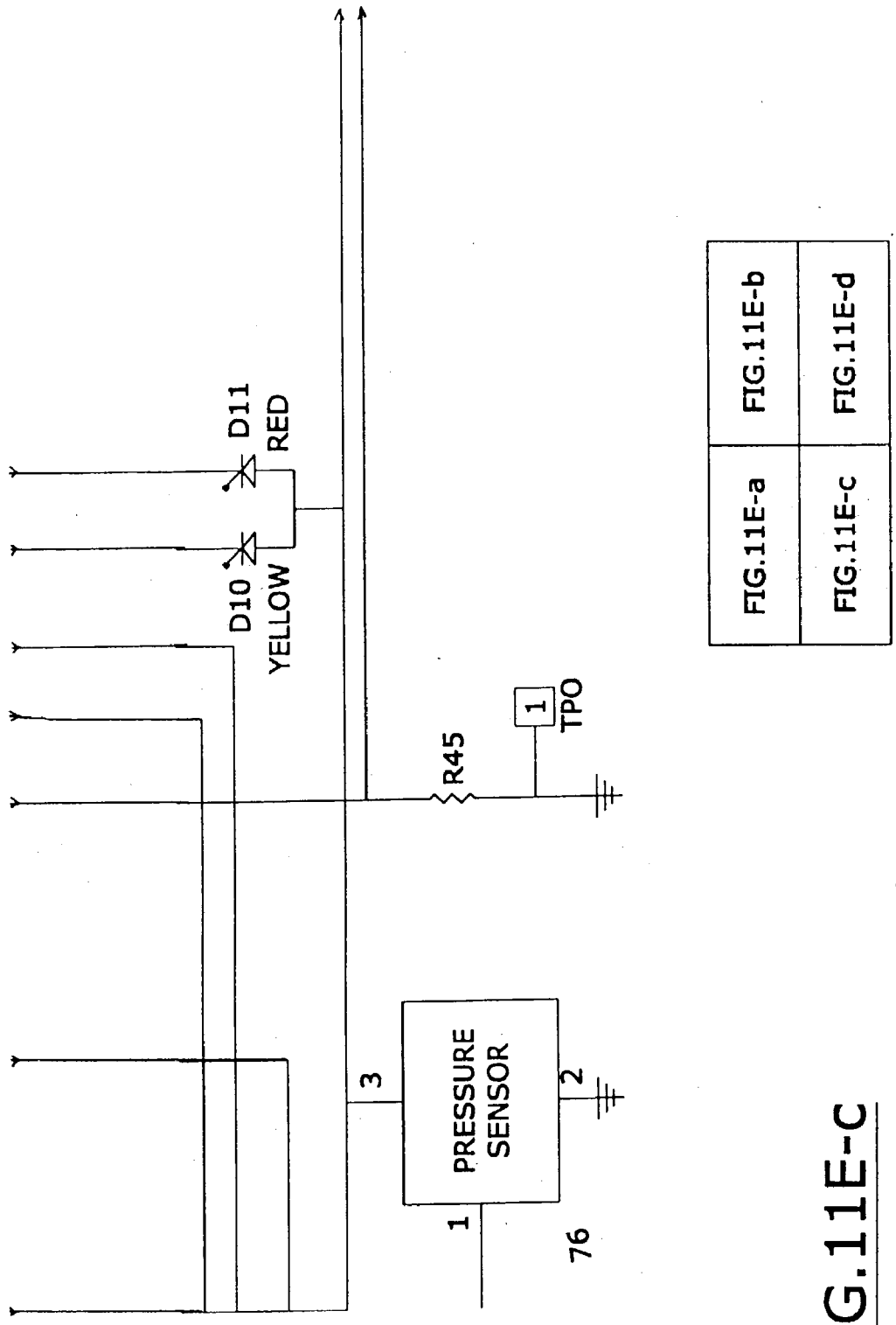
D11
RED
D10
YELLOW
R45
1
TPO
PRESSURE
SENSOR
3
2
1
76
FIG.11E-a
FIG.11E-b
FIG.11E-c
FIG.11E-d

FIG.11E-C

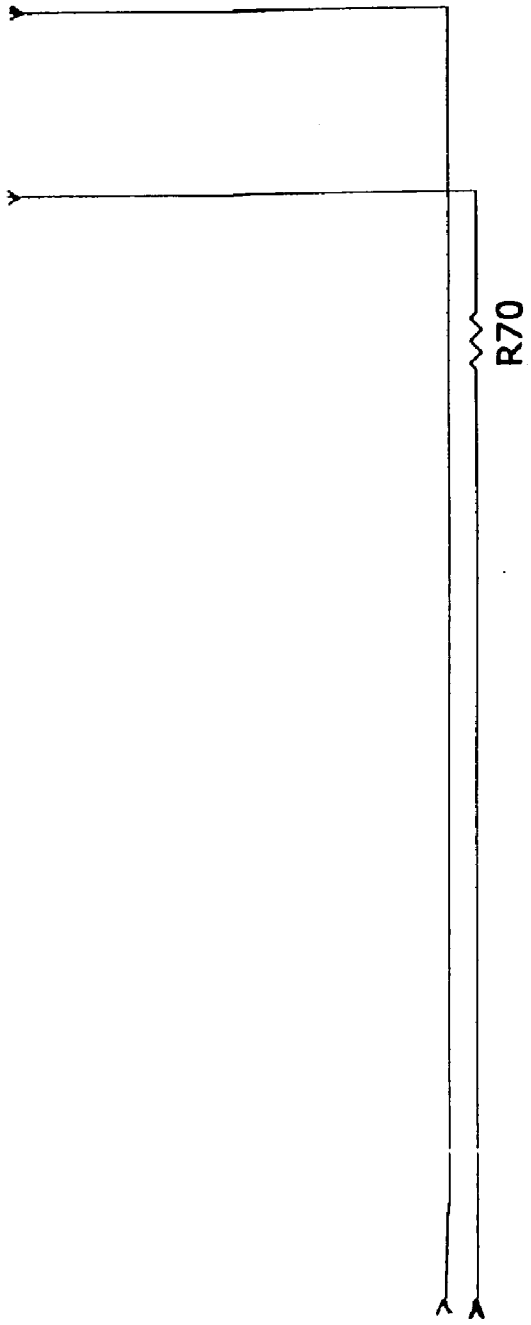

FIG.11E-a	FIG.11E-b
FIG.11E-c	FIG.11E-d

FIG.11E-d

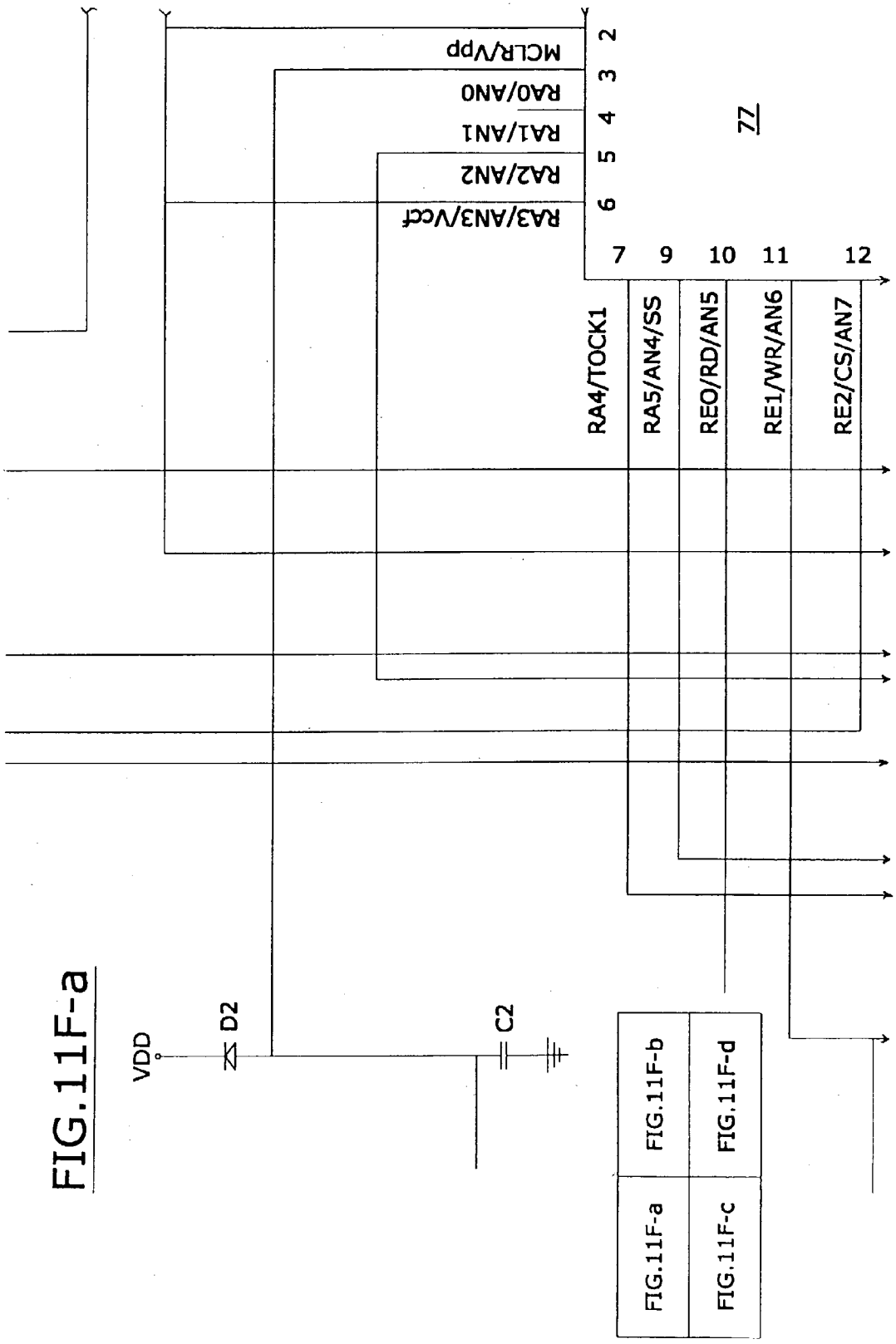
MCLR/Vpp
RA0/AN0
RA1/AN1
RA2/AN2
RA3/AN3/Vcc+
RA4/TOCK1
RA5/AN4/SS
REO/RD/AN5
RE1/WR/AN6
RE2/CS/AN7
2
3
4
5
6
7
9
10
11
12
77
VDD
D2
C2
FIG.11F-a
FIG.11F-b
FIG.11F-c
FIG.11F-d

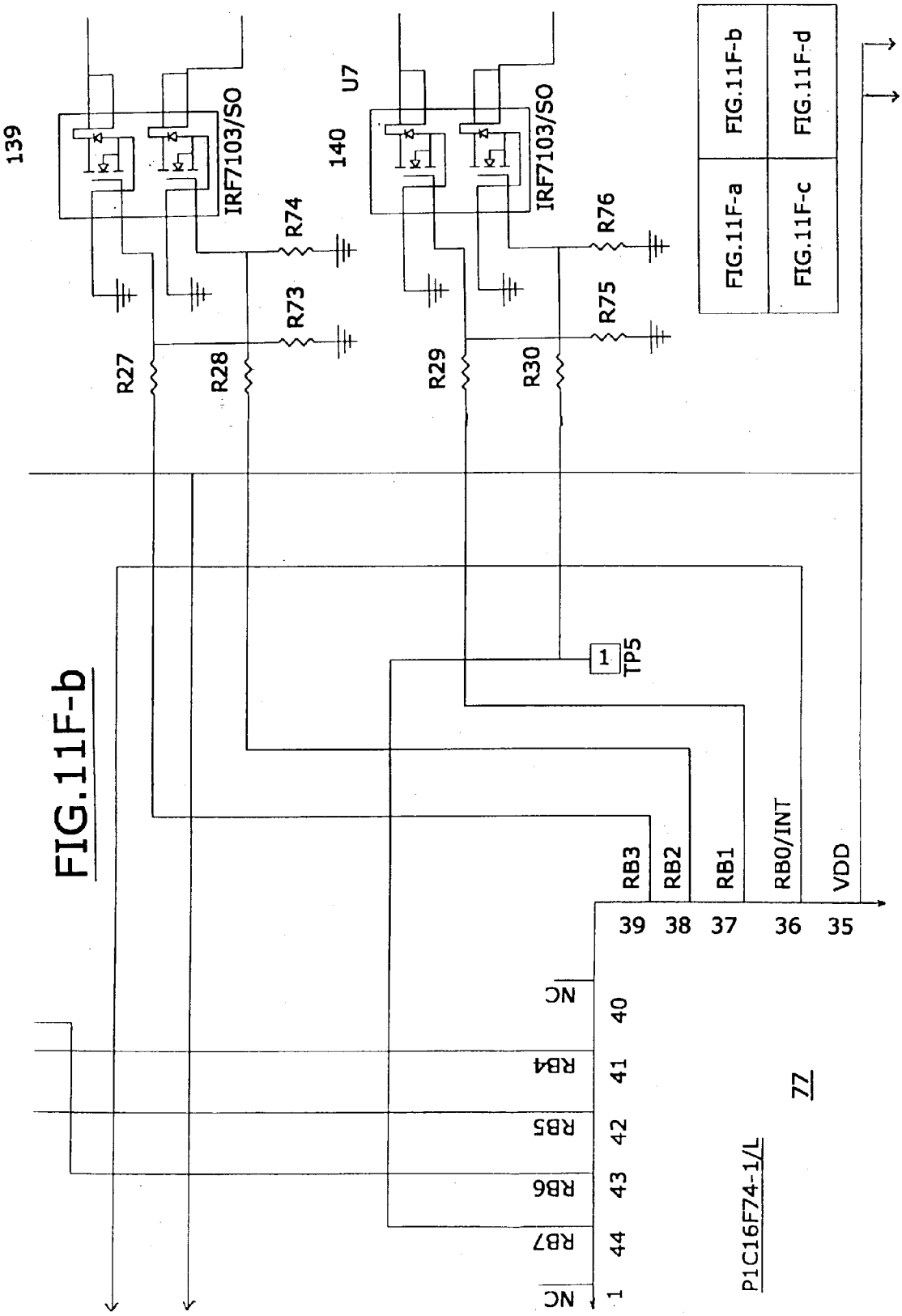
139
IRF7103/SO
R74
R73
R27
R28
140
U7
IRF7103/SO
R76
R75
R29
R30
FIG.11F-a
FIG.11F-b
FIG.11F-c
FIG.11F-d
1
TP5
RB3
RB2
RB1
RB0/INT
VDD
39
38
37
36
35
NC
40
RB4
41
RB5
42
RB6
43
RB7
44
NC
1
P1C16F74-1/L
77

FIG.11F-b

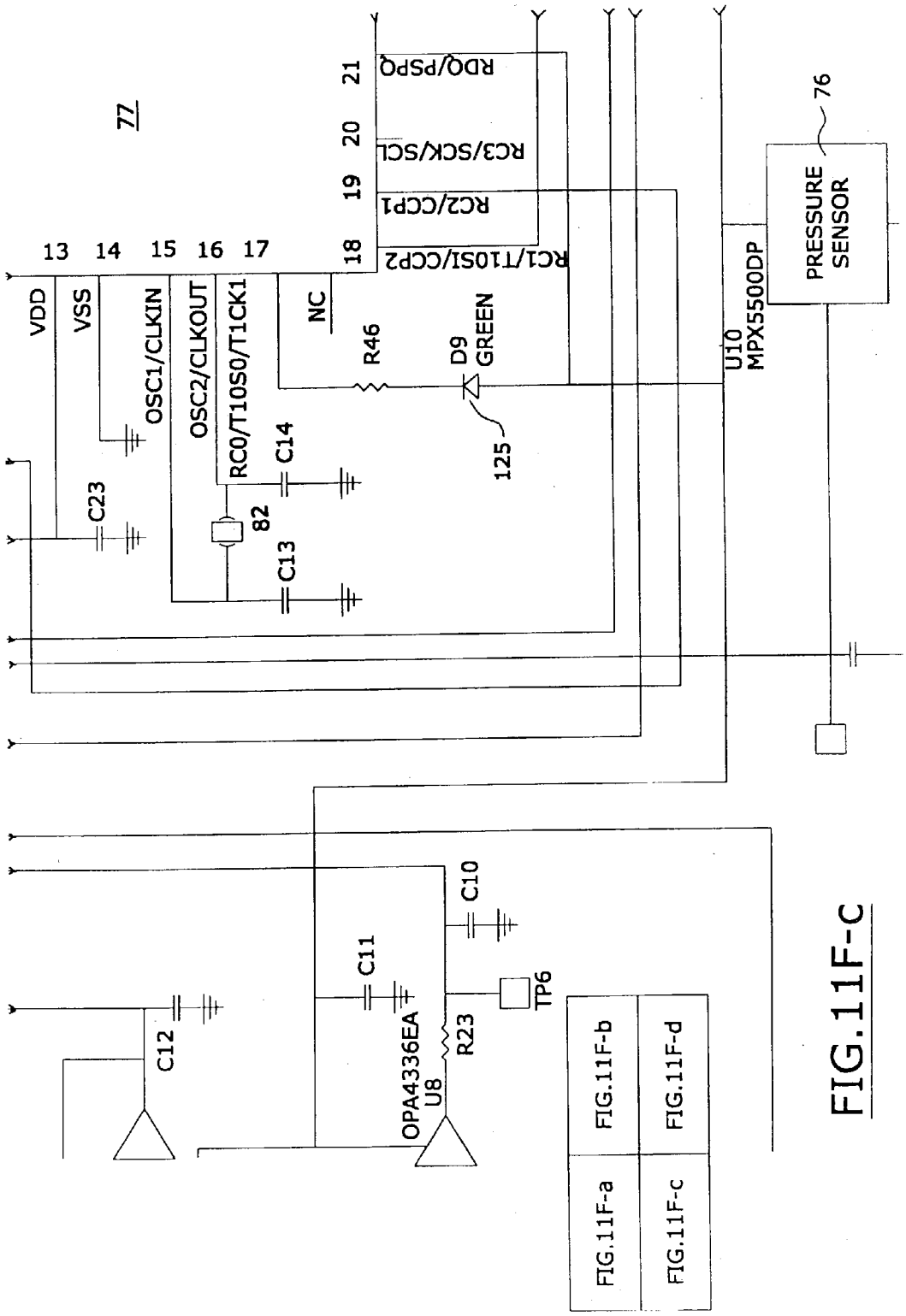
77
13
14
15
16
17
18
19
20
21
VDD
VSS
OSC1/CLKIN
OSC2/CLKOUT
RC0/T1OSO/T1CK1
NC
RC1/T1OSI/CCP2
RC2/CCP1
RC3/SCK/SCL
RD0/PSP0
C23
C14
C13
82
R46
D9
GREEN
125
U10
MPX5500DP
PRESSURE
SENSOR
76
C12
C11
C10
OPA4336EA
U8
R23
TP6
FIG.11F-a
FIG.11F-b
FIG.11F-c
FIG.11F-d

FIG.11F-C

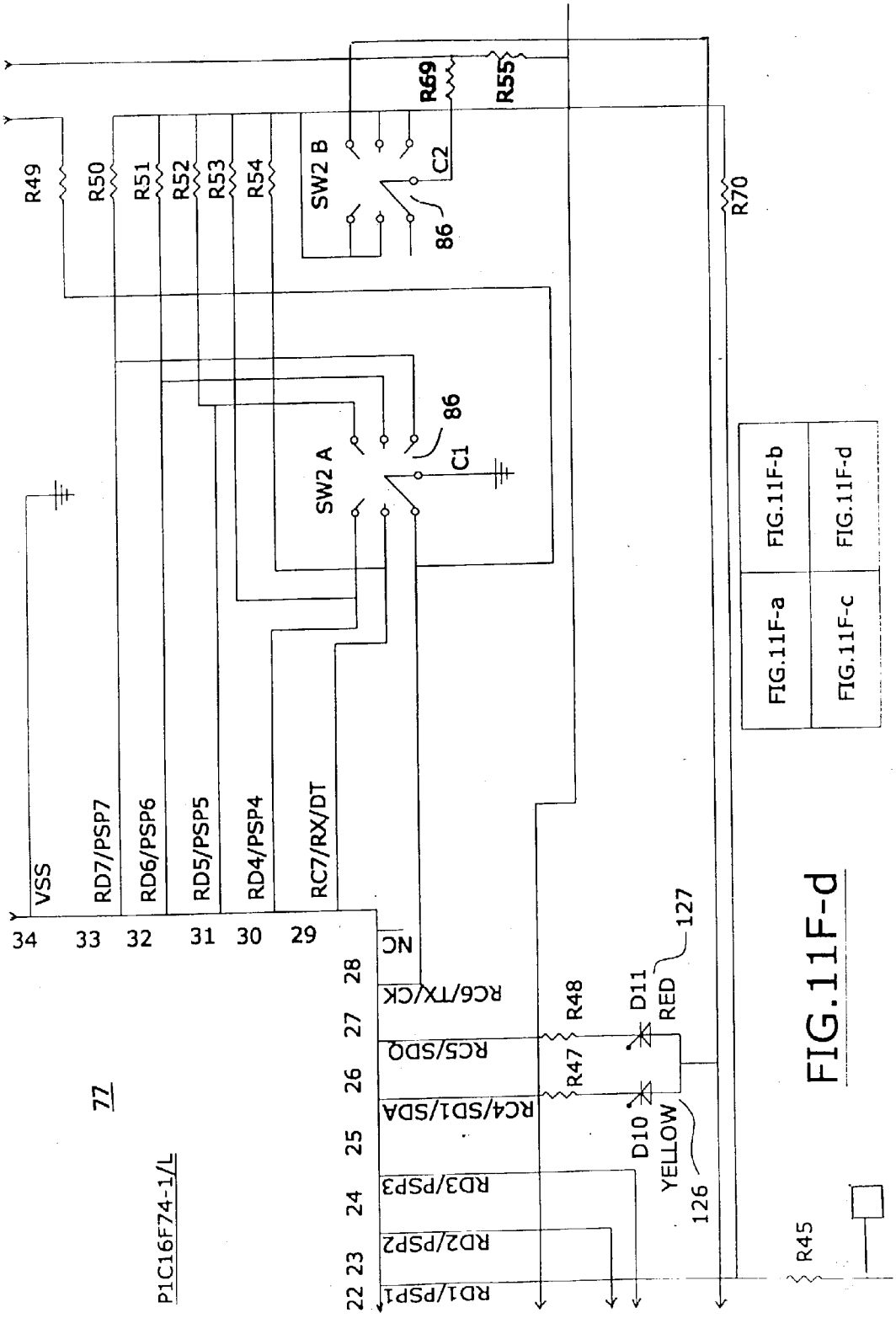
R49
R50
R51
R52
R53
R54
SW2 B
R69
R55
C2
86
R70
SW2 A
86
C1
VSS
RD7/PSP7
RD6/PSP6
RD5/PSP5
RD4/PSP4
RC7/RX/DT
34
33
32
31
30
29
NC
28
RC6/TX/CK
27
RC5/SDO
26
RC4/SD1/SDA
25
RD3/PSP3
24
RD2/PSP2
23
RD1/PSP1
22
77
P1C16F74-1/L
R48
R47
D11
RED
127
D10
YELLOW
126
R45
FIG.11F-a
FIG.11F-b
FIG.11F-c
FIG.11F-d
FIG.11F-d

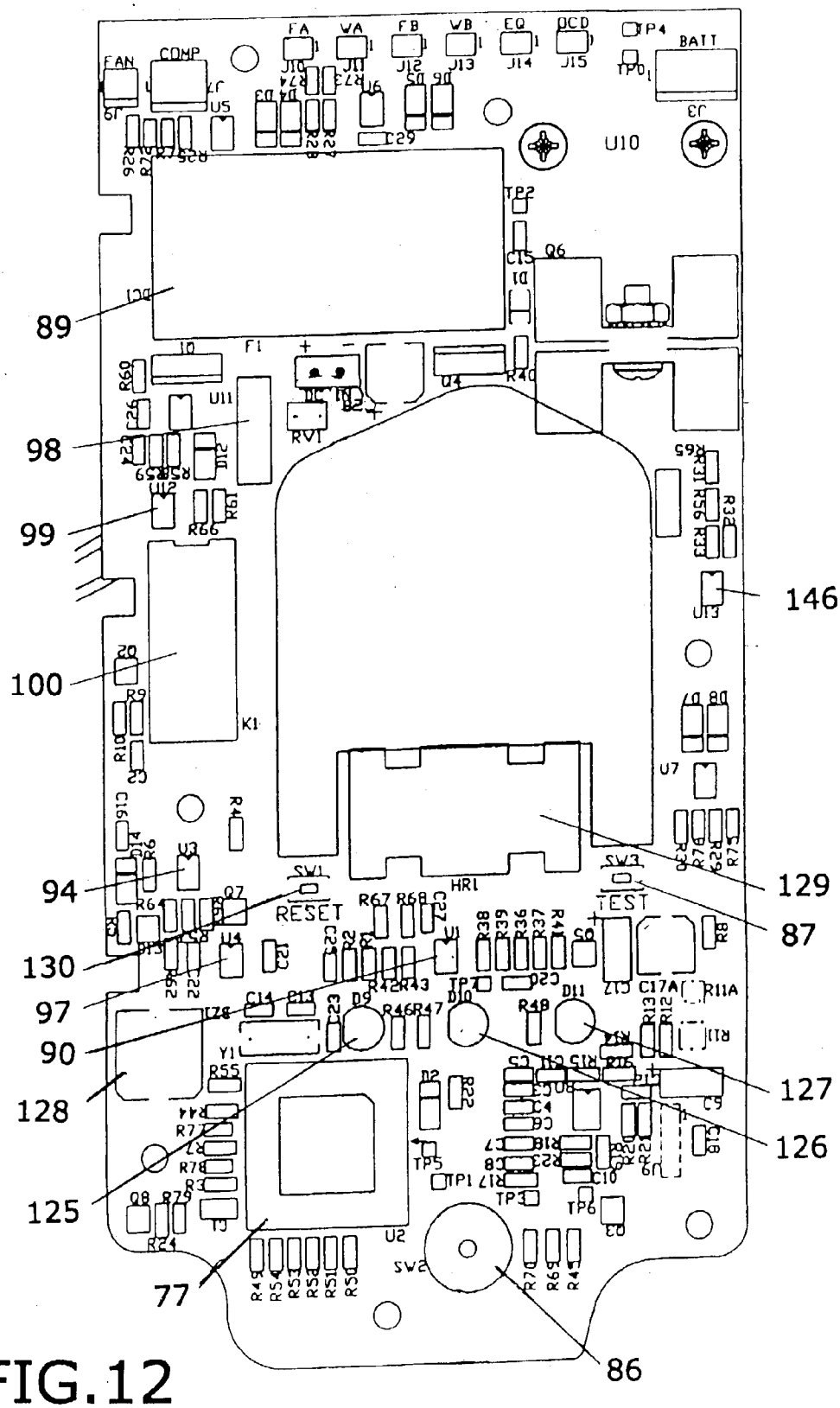
89
98
99
100
94
130
97
90
128
125
77
86
146
129
87
127
126
FAN
COMP
FA
WA
FB
WB
EQ
OCD
BATT
U10
RESET
TEST
SW1
SW3
SW2
HR1
U2
U7
U11
U13
K1
Y1
F1
RV1
Q6
Q4
Q7
Q8
D9
D10
D11
TP1
TP2
TP3
TP4
TP5
TP6
TP7

FIG.12

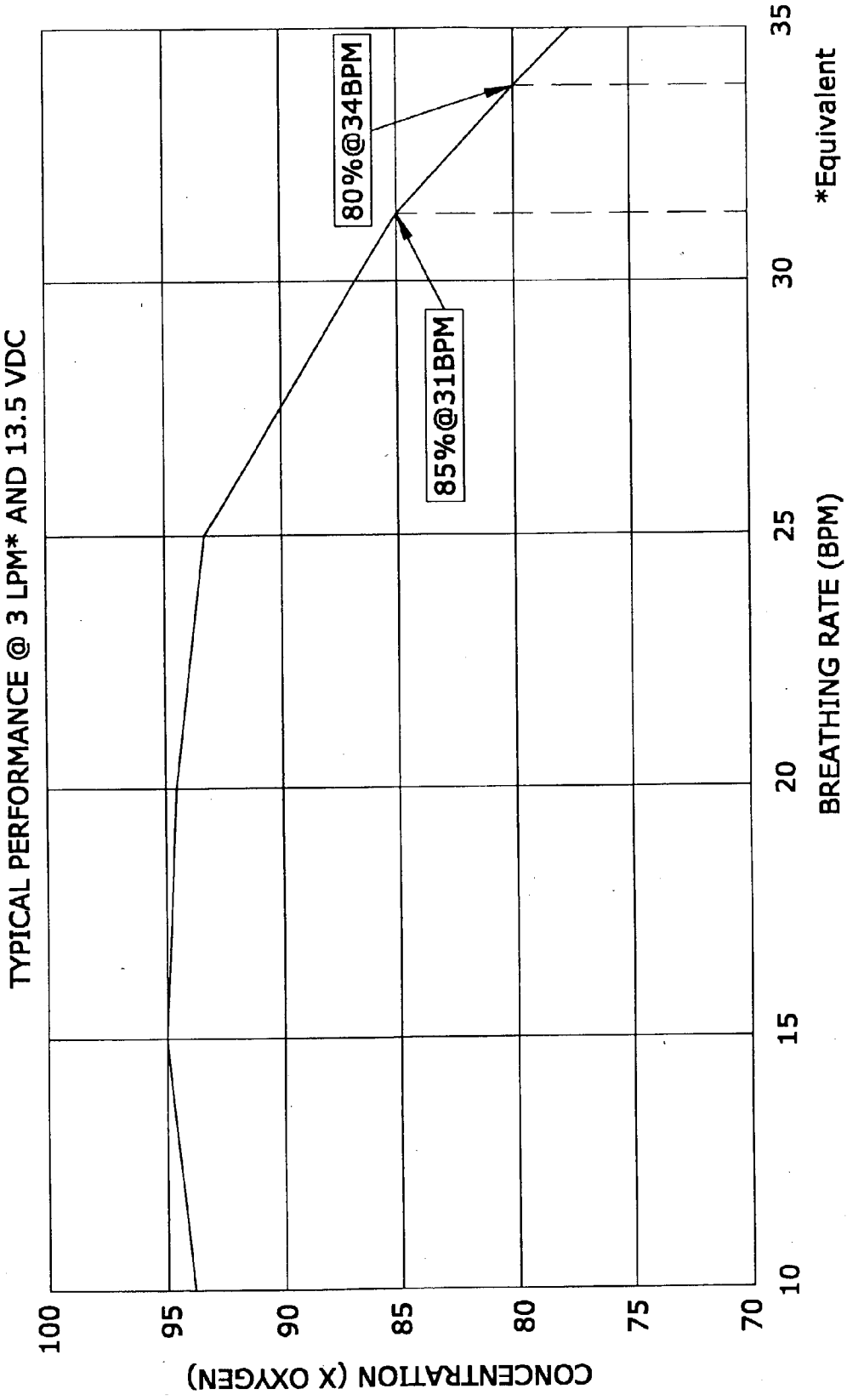
TYPICAL PERFORMANCE @ 3 LPM* AND 13.5 VDC
80%@34BPM
85%@31BPM
CONCENTRATION (% OXYGEN)
100
95
90
85
80
75
70
10
15
20
25
30
35
BREATHING RATE (BPM)
*Equivalent

FIG.13

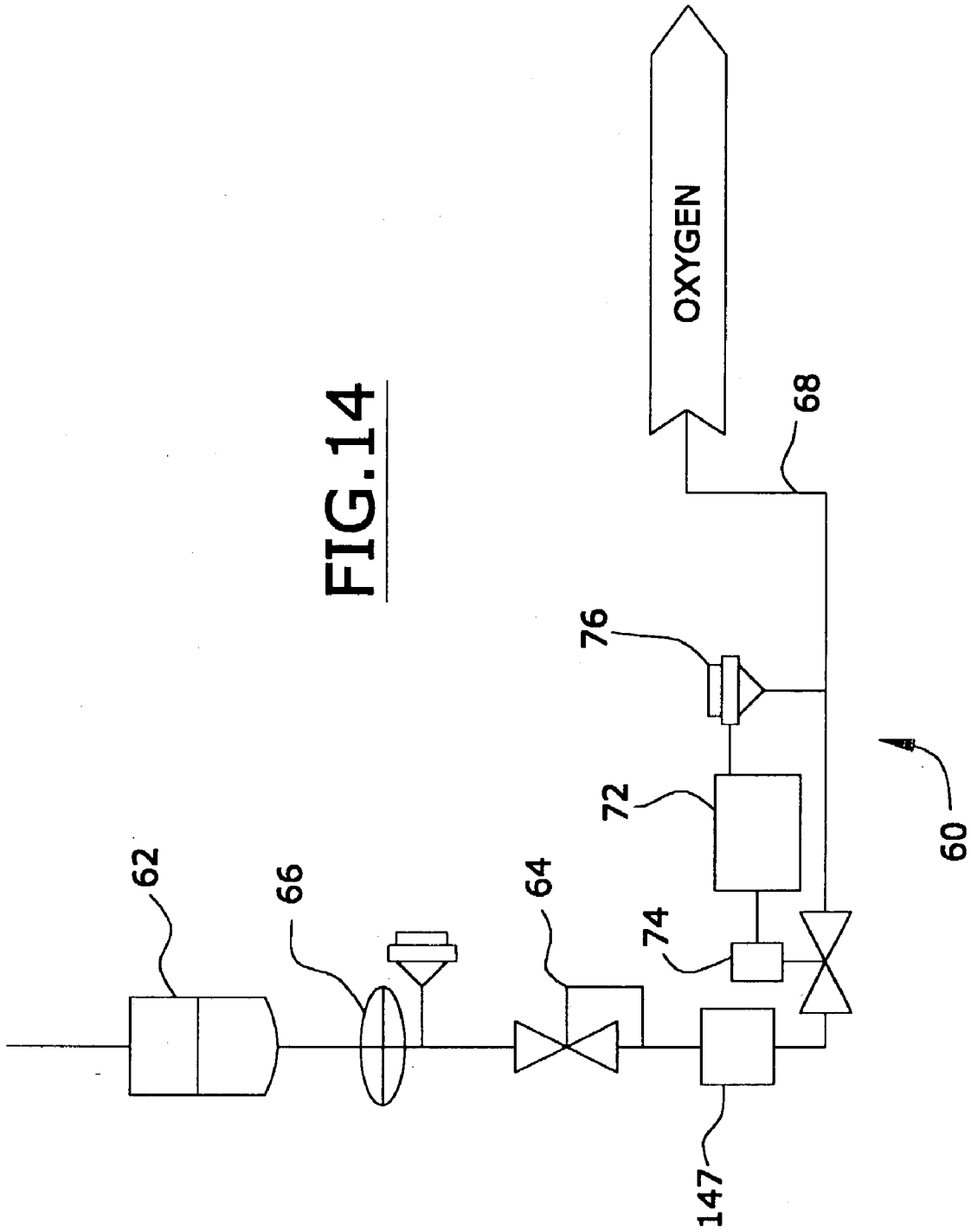

FIG.14

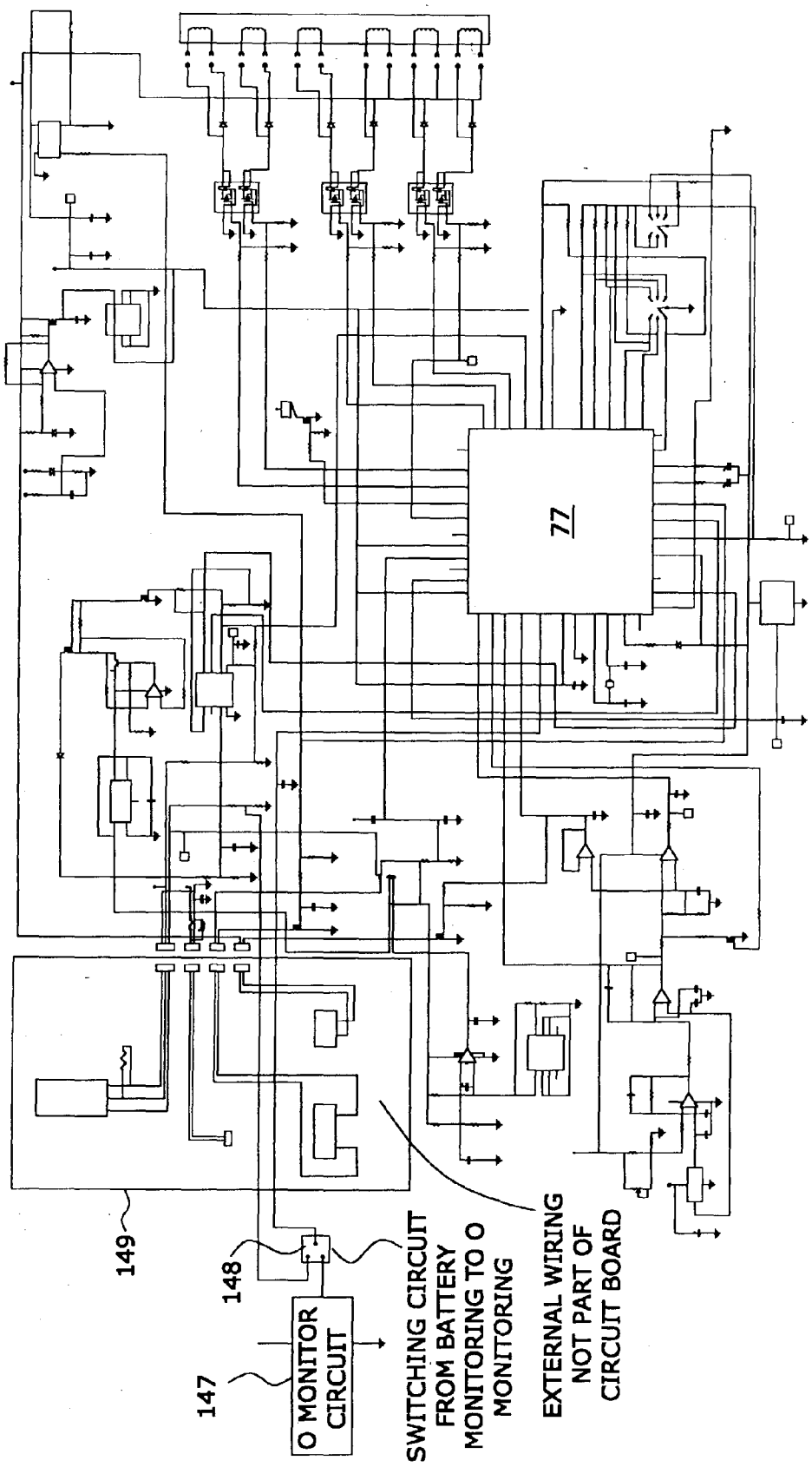
77
149
148
147
O MONITOR CIRCUIT
SWITCHING CIRCUIT FROM BATTERY MONITORING TO O MONITORING
EXTERNAL WIRING NOT PART OF CIRCUIT BOARD

FIG.14A

PORTABLE OXYGEN CONCENTRATOR

CROSS-REFERENCE TO RELATED APPLICATIONS

[0001] This application claims benefit to U.S. provisional application serial No. 60/353,563, filed Jan. 31, 2002.

[0002] This invention relates generally to gas concentration apparatus for separating gas mixtures by pressure swing adsorption ("PSA") and more particularly to PSA apparatus intended to deliver oxygen for medical use.

BACKGROUND OF THE INVENTION

[0003] The general type and operating principles of PSA, or pressure swing adsorption, apparatus with which this invention is concerned are described in U.S. Pat. Nos. 3,564,816; 3,636,679; 3,717,974; 4,802,899; 5,531,807 and 5,871,564, among others. For example, a pressure swing adsorption apparatus may include one or more adsorbers, each having a fixed sieve bed of adsorbent material to fractionate at least one constituent gas from a gaseous mixture by adsorption into the bed, when the gaseous mixture from a feed stream is sequentially directed through the adsorbers in a co-current direction. While one adsorber performs adsorption, another adsorber is simultaneously purged of its adsorbed constituent gas by part of the product gas that is withdrawn from the first or producing adsorber and directed through the other adsorber in a counter-current direction. Once the other adsorber is purged, the feed stream at a preset time is then directed to the other adsorber in the co-current direction, so that the other adsorber performs adsorption. The first adsorber then is purged either simultaneously, or in another timed sequence if there are more than two adsorbers, all of which will be understood from a reading of the above described patents.

[0004] When, for example, such apparatus is used to produce a high concentration of oxygen from ambient air for use in various applications, whether medical, industrial or commercial, air which enters the apparatus typically contains about 78% nitrogen, 21% oxygen, 0.9% argon, and a variable amount of water vapor. Principally, most of the nitrogen is removed by the apparatus to produce a gas product, which for medical purposes, for example, typically may contain at least about 80% oxygen. Most such apparatus for medical uses generally are too bulky for use by patients who are traveling or otherwise wish to leave their home enviromnents for any purpose. In those cases, patients will normally forego the use of oxygen concentrators and revert to the use of pressurized oxygen tanks. While oxygen tanks have been very useful in enabling patients to be more ambulatory, they nevertheless are restricted in use, as for example because of limited oxygen storage capacity or because their use may be prohibited in certain modes of public transportation or locations where flammable materials can create a hazard. Although the useful life of oxygen tanks may be extended by the use of oxygen concentration devices ("OCD"), as disclosed, for example, in co-pending U.S. application Ser. No. 09/420,826, filed Oct. 19, 1999, their use nevertheless continues to be problematic because of safety and storage concerns, access to re-supplies of oxygen, and continuing medical expenses and reimbursement paperwork for the oxygen.

SUMMARY OF THE INVENTION

[0005] The present invention provides a new and improved pressure swing adsorption ("PSA" or "oxygen concentrator") apparatus that can attain the required concentrations of oxygen for the desired application(s), yet be highly portable and easily manipulated and transported even by patients with relatively limited physical capacities. This is accomplished by a unique configuration combining an inventive PSA design with an oxygen conservation device ("OCD") for pulse dose application of oxygen from the PSA to the user.

[0006] The intended use of the apparatus is to deliver supplemental, high-purity oxygen to persons who suffer, for example, from various forms of Chronic Obstructive Pulmonary Disease (COPD). The invention preferably uses a two-bed PSA together with an integrated OCD to provide oxygen in doses up to an equivalent of about 5 liters per minute (LPM) effective rate of continuous high-concentration oxygen at concentrations over 90%.

BRIEF DESCRIPTION OF THE DRAWING

[0007] The foregoing and other objects, features and advantages of the invention will become more apparent from a reading of the following description in connection with the accompanying drawing of a preferred embodiment of the invention, in which:

[0008] **FIG. 1** is a schematic illustration of a combined PSA/OCD apparatus according to the invention;

[0009] **FIGS. 2 and 3** are perspective views, as viewed from the top, of a preferred embodiment of the invention with the upper and lower housing portions shown in phantom to highlight operating components of the invention;

[0010] **FIG. 4** is a similar prospective view, but as viewed from the bottom of the preferred embodiment;

[0011] **FIGS. 5, 6, 7, 8** and **9** are top, bottom, right side, left side and front views, respectively, of the preferred embodiment with the upper and lower housing portions removed;

[0012] **FIG. 10-10** is a cross sectional view taken on line **10-10** of **FIG. 5**;

[0013] **FIGS. 11A through 11F** are diagrams of the electronic circuit used to control the components of the preferred embodiment;

[0014] **FIG. 12** illustrates the circuit board;

[0015] **FIG. 13** is a graph approximating the effect that the breathing rate of a user may have on the relative concentration of oxygen as supplied by the preferred embodiment; and

[0016] **FIGS. 14 and 14A** partially illustrate an alternate embodiment in which the apparatus also includes an oxygen monitor.

DETAILED DESCRIPTION OF THE PREFERRED EMBODIMENT

[0017] Turning now to the drawing and in accordance with the present invention, there is shown a preferred embodiment, generally indicated as **20**, of a combined pressure swing adsorption apparatus and oxygen conserving device, or PSA/OCD, used for fractionating at least one component, namely nitrogen, from a gaseous mixture, generally but not necessarily ambient air, by pressure swing adsorption to

produce a product gas, and for delivering the product gas at specific and variable intervals upon demand by a user. The general operating principles of pressure swing adsorption are well known and are disclosed, for example, in commonly assigned U.S. Pat. Nos. 4,802,899, 5,531,807 and 5,871,564, the entire disclosures of which are incorporated by reference herein. Similarly, conservation by pulse dosing of the supply of a product gas such as oxygen from a pressurized tank, in order to increase the useful life of the stored oxygen, also is generally known and is disclosed, for example, in co-pending U.S. application Ser. No. 09/420,826 filed Oct. 19, 1999, the entire disclosure of which also is incorporated by reference herein.

[**0018**] With reference to **FIG. 1**, ambient air is supplied to the PSA/OCD apparatus **20** through a filtered intake **21** and an intake resonator **22** to decrease the noise from the intake of the ambient air feed stream. The feed stream continues from resonator **22** and is moved from its outlet **22***a* by a feed air compressor/heat exchanger assembly **24** alternatively to first and second adsorbers **30**, **32** through feed valves **40** and **42** respectively. Compressor/heat exchanger assembly **24** as shown includes a compressor **24***a* with an air inlet **24***c* and an outlet **24***d* followed by the heat exchanger **24***b*.

[**0019**] When the feed stream alternatively enters inlets **30***a*, **32***a* of adsorbers **30**, **32** in a co-current direction, the respective adsorber fractionates the feed stream into the desired concentration of product gas. The adsorbent material used for the beds to separate nitrogen from the ambient air may be a synthetic zeolite or other known adsorber material having equivalent properties.

[**0020**] The substantial or usable portion of the oxygen enriched product gas generated by the ambient air flowing in the co-current direction sequentially in each one of the absorbers **30**, **32** is directed through the outlet **30***b*, **32***b* and check valve **34**, **36** of the corresponding adsorber to a product manifold **48** and then to a delivery control assembly **60**, as will be described. The balance of the product gas generated by each adsorber is timed to be diverted through a purge orifice **50** and a properly timed equalization valve **52** and an optional flow restrictor **53** to flow through the other adsorber **30** or **32** in the counter-current direction from the respective outlet **30***b*, **32***b* and to the respective inlet **30***a*, **32***a* of the other adsorber to purge the adsorbed, primarily nitrogen, gases. The counter-current product gas and purged gases then are discharged to the atmosphere from the adsorbers through properly timed waste valves **44**, **46**, tubing **47** and a sound absorbing muffler **48**.

[**0021**] Control assembly **60**, to which the usable portion of the produced gas directed according to the invention, includes a mixing tank **62** which also may be filled with synthetic zeolite and serves as a reservoir to store product oxygen before delivery to the user through an apparatus outlet **68** in the pulse dose mode, a piston-type pressure control regulator **64** to regulate the product gas pressure to be delivered to the user, a bacteria filter **66**, and an oxygen delivery system **70** including a pulse dose transducer **72** including the OCD components of the electronic circuit **80** to be described, a flow control solenoid operated valve **74**, and a low pressure sensor **76**. As shown in **FIGS. 2, 3** and **5**, all of the feed, waste, equalization and flow control valves are mounted on a common valve block **26**.

[**0022**] According to the invention, delivery of the PSA generated oxygen concentrated gas from the mixing tank **62** to the user is controlled by the delivery system **70** as will now be described.

[**0023**] As is well known, the most effective use of inhaled oxygen occurs at the onset of inhalation, and various devices have been constructed to deliver oxygen from pressurized oxygen tanks only when inhalation is first sensed by the devices and only during the initial stage of the inhalation cycle. We have taken advantage of that well known principle to devise a much more compact and efficient PSA apparatus to include an oxygen delivery system that primarily only delivers oxygen at the initial stage of inhalation. As shown in the drawing, for example in **FIGS. 11 and 12**, low pressure sensor **76** will detect a drop in pressure as sensed by inhalation of a user through a conventional cannula (not shown) connected to the apparatus outlet **68** by which the oxygen concentrated gas is delivered to the user. When pressure sensor **76** detects the pressure drop, the transducer circuitry **72** in electronic circuit **80** causes the flow control valve **74** to be opened for a predetermined time and allow a predetermined amount of the oxygen enriched gas in the mixing tank **62** to be delivered to the user through the outlet **68**. The amount of delivered gas is controlled by the electronic circuit **80** on circuit board **81** and using a programmable device **77** for delivery of any one of a number of effective flow rates, which in our preferred embodiment include five effective flow rates of one through five LPM at an oxygen concentration from about 80% to about 95%.

[**0024**] The setting is made by the multiple position control switch **86** which, as shown in **FIG. 2**, is accessed by opening a hinged cover **102** on an upper housing portion **104** of the apparatus **20**. Cover **102** preferably is held closed by a magnetic latch for both a secure closure and easy opening. Apparatus **20** is further enclosed by a lower housing portion **106**. Between the upper and lower housing portions **104**, **106** and mating with them is a central chassis **108** on which are mounted the operating components of the apparatus **20**.

[**0025**] The outer housing portions **104**, **106** and the chassis **108** may be of any suitable impact resistant material, but preferably is an injection molded ABS plastic. Chassis **108** as shown also includes an integrally molded carry handle **109**.

[**0026**] The effectiveness and compact size of the invention is made possible in large part because of structural placement of the components of the invention and control of air flow within the apparatus as will now be described.

[**0027**] According to the invention, ambient air can enter the interior of the apparatus **20** only into the space between the access cover **102** and control panel **111**, which is accomplished by access vents **110** in a recess surrounding outlet **68** and through an elongated slot **112** formed at the hinge connection of cover **102** to the upper housing **104**. Except for the access vents **110**, the slot **112**, and at air exhaust points, the upper and lower housings **104** and **106** form an enclosed chamber with the chassis **108**. The ambient air is caused by a fan **92** to enter the enclosed interior enclosed chamber of apparatus **20** through an accessible inlet filter **113** on control panel **111** which may be accessed when hinged cover **102** is opened. Filter **113** is a foam, gross-particulate filter designed to remove dust and other impurities, from the air entering the apparatus interior. A

portion of the ambient air which enters the interior of apparatus **20** through filter **113** is caused by the compressor assembly **24** to flow into the intake **21** of the resonator **22** through a second filter **114** made of felt material to further filter the air to be fractionated. The balance of the ambient air flowing into the interior of the apparatus **20** is, according to the invention, caused to flow in a controlled path throughout the enclosed interior of the apparatus to cool the operating elements of the PSA assembly.

[**0028**] As will become evident, fan **92**, which is positioned in an angled opening **93** in chassis **108** as shown in **FIG. 10**, also functions to move the balance of the ambient air in a controlled path through the enclosed spaces in the apparatus **20** between the chassis **108** and the cover portions **104**, **106**.

[**0029**] As can be seen in FIGS. **4-9**, the operating elements mounted on the top side of the central chassis **108** are the intake **21**, control switch **86**, accessible through control panel **111**, to activate the apparatus and set the flow rate, a removable battery pack **90**, the valve block **26**, the compressor assembly **24**, the circuit board **81**, the fan **92**, and the cannula fitting **68**. Mounted on the bottom side of the central chassis are the resonator **22**, the adsorber beds **30**, **32**, the muffler **46**, the mixing tank **62**, and the pressure control regulator **64**.

[**0030**] To direct the flow throughout the apparatus **20** of the ambient air used for cooling the operating components of the apparatus **20**, the portion of the ambient air entering at filtered inlet **113** and not directed through filter **114** is directed through the apparatus by a series of horizontal and vertical baffles **120** formed with chassis **108** and which direct the ambient cooling air entering the access space through filtered inlet **113**, by the draw from fan **92**, sequentially over the circuit board **81**, the valve block **26** and compressor assembly **24**. The ambient cooling air is then drawn by fan **92** to the underside of the chassis **108** through opening **93**, first through a plenum or duct (not shown) formed on the bottom side of chassis **108**, to direct all of the cooling air toward the front of the space formed between chassis **108** and lower housing **106**. The cooling air is then redirected to flow toward the back of apparatus **20** over the resonator **22**, adsorber beds **30**, **32**, mixing tank **62**, muffler **46** and pressure regulator **64** before being expelled through grillwork **124** at the rear end of the lower housing portion **106**. As will be evident from **FIG. 12** to be described, all of the heat generating components mounted on circuit board **81**, which is mounted on the top of chassis **108**, are positioned on the rear side of the circuit board in the direct flow of the cooling air as it enters the interior of apparatus **20**.

[**0031**] Because of the novel design and combination and placement of elements comprising the invention, a combined PSA/OCD based on the preferred embodiment is easily able to deliver an oxygen concentration, at standard atmosphere of about 90%±3% in pulse doses at every inhalation cycle of about 8.75 mL for the setting of 1 LPM, about 17.5 mL for the setting of 2 LPM, about 26.25 mL for the setting of 3 LPM, about 35.0 mL for the setting of 4 LPM, and about 43.75 mL for the setting of 5 LPM. Quite surprisingly, this performance can be achieved in an apparatus with a weight of less than about 10 lb., measuring less overall than 17" in length, 8" in width and 6" in height, and emitting less than about 55 decibels noise level.

[**0032**] In the embodiments shown, each of the adsorber beds **30**, **32** for a medical application may be about 9.75 inches in length and about 1.25 inches in diameter, with the zeolite sieve material weighing about 81 grams for each adsorber bed. Preferably, the beds **30**, **32** are spring biased in order not to "fluidize" the sieve material in their depressurization or pressure equalization stages. The feed stream of air is provided at a nominal rate of about 7 liters per minute, to produce a product gas within an approximate operating pressure range from about 19 psia to about 23 psia, or about 21 psia when powered at about 13 volts, with the setting at 3 LPM and a user breathing rate of about fifteen breaths per minute.

[**0033**] The circuit components on the printed circuit board **81** control the PSA cycle and the pulse dosing of oxygen from the apparatus. Those components are illustrated in **FIGS. 11***a-f* and **12** and function as described in the attached detailed description of circuit **80**.

[**0034**] The concentration of the oxygen supplied by the apparatus for each flow control switch setting is dependent on system pressure, operating voltage (battery or external supply), and patient breathing rate within allowable ranges of these parameters. In circuit **80** as will be shown, the microprocessor calculates, from continuous or sampled readings of the selector position, the operating voltage, and the frequency of actuation of the OCD, the predictable oxygen concentration being delivered to the user. If any of these approach the upper or lower thresholds, for example as low as 85% oxygen concentration, an intermittent alarm may be provided to warn the user that he or she can continue to use the apparatus but should take action to prevent the performance from falling outside of specifications. If any of the parameters regularly exceeds the predetermined thresholds, for example at a calculated oxygen concentration of 80% or less, the alarm may be programmed to sound continuously to notify the user that the performance of apparatus **20** is outside of specifications and its use discontinued.

[**0035**] For example, although the apparatus has been designed to accommodate reasonable breathing rates, a very significant increase in the physical activity of a user and the resulting increased breathing rate could cause the apparatus to be overdrawn by a demand of oxygen from the apparatus **20** more than it can supply. The graph of **FIG. 13** illustrates the effect breathing rate has on oxygen concentration for a flow control switch setting of 3 LPM and a supply voltage of 13.5 VDC.

[**0036**] The embodiment shown preferably includes an audible signal at startup of the apparatus, both audible and a red visual light alarms to signal high and low pressure, system overdraw, and an apnea event (i.e., the absence of inhalation within a preset time), audible and yellow visual light alarms to signal a low battery condition, and a pulsing green light to indicate normal apparatus operation in a pulse mode.

[**0037**] Maximum breathing rates for the apparatus have been determined for the combination of each flow control switch setting and range of voltages that control the apparatus. The circuit **80** continuously monitors the battery voltage, flow control switch setting, and the patient's breathing rate. If the breathing rate causes the apparatus to approach an overdraw condition (an oxygen concentration

of about 85%) or to reach overdraw (a concentration of about 80% or less), the alarm either warns or alerts the patient to moderate his or her physical activity.

[0038] Mounted on the circuit board and below filter **113** is a conventional liquid crystal display hour meter **122** to record the cumulative time of use of the apparatus, so that the recommended service scheduling can be met. As filter **113** is removable by the user for washing, hour meter **122** can be easily seen by the user. During servicing, a test button **87** accessible from the control panel may be actuated to cause the apparatus **20** to cycle through its various operating modes to ensure that operating components of the apparatus function as designed. An accessible reset button **130** enables a service technician to reset the counter on the hour meter after servicing.

[0039] A temperature switch **124** is provided to shut off power to the compressor assembly **24** in the event of overheating as a result of, e.g., cooling fan failure or air inlet/outlet blockage.

[0040] As shown in **FIG. 11**A, the main circuit board **81** is based on the PIC 16F74-1/L microcontroller **77**, having an external crystal oscillator **82** with a clock rate of 1 Mhz. The microcontroller **77** receives input data from: 1.) the analog pressure conditioning circuit (for the oxygen conserving device, hereinafter OCD), 2.) the battery management system with a nominal 1.5 amp constant current generator, 3.) the valve control **72** (for the pressure swing adsorption, hereinafter PSA), 4.) a rotary switch **86**, 5.) the purity test button **87**, and 6.) the pressure sensor **76** to indicate sensor pressure. The microcontroller **77** communicates with the operator via three LEDs **125**,**126** and **127**, and an audible alarm **128**. Additionally, an hour meter **122** will indicate compressor on time.

[0041] Referring to **FIG. 11**D and **FIG. 11**C, two additional circuits reside on the main circuit board **81**. The battery reset circuit disables the 5V regulator **97** when the battery voltage drops below a reference voltage, effectively shutting down the majority of the circuit board and minimizing the current drawn from the battery. The second circuit controls the switching response time of the on-board circuit relay K1 **100**, providing uninterrupted service if the AC adapter is removed. The relay **100** is energized when the external power supply is plugged into the unit, so that the unit is energized from the external supply only. When the external supply is unplugged the relay **100** will de-energize, and the unit will operate on battery power.

[0042] **FIG. 11B** is a schematic diagram of the pressure signal conditioning circuit or OCD. A quadruple operational amplifier, OPA4336EA250, is used in the analog section of the circuitry. Two of the four amplifiers, U8-A **83** and U8-B **84**, have inputs connected directly to the differential output of the pressure transducer U9 **78**. An optimum offset voltage on Pin **7** of U8-B **84** was determined to be 3.475±0.025 volts. This voltage is set by adjusting trimmer R11 **79**. The gain of this stage is over **400**; as a result, the pressure signal on Pin **7** of U8-B **84** is in the right range for the following stage to make decisions regarding patient breathing. Amplifier U8-C **88** is configured as a comparator. Pin **12** of **88** represents the average pressure in the patient cannula during the last four-to-five breaths, while Pin **11** of **88** instantaneously follows the breathing pressure. As a result, a vacuum generated during the initial part of each inhalation changes the output of U8-C **88** from low to high, signaling a new inhalation to the microcontroller **77**. One of the advantages of using this circuit is its relative immunity to small or slow offset drifts caused by temperature changes or component aging. In addition, the "floating" average pressure signal automatically follows changes in the breathing pattern.

[0043] When the solenoid valve **74** is open and oxygen flows through the cannula, a relatively high pressure is present in the system. This pressure is read by the pressure sensor U9 **78** and amplified by U8-A **83** and U8-B **84**, generating a five-volt spike in the output of U8-B **84**. To maintain the accurate average pressure value, influenced only by patient breathing, this spike is compensated for by a counter-pulse generated by transistor Q3 **85**. The gate of this transistor is activated by a signal from the microcontroller U2 **77** for as long as the signal on Pin **7** of U8-B **84** is higher than 4.375 volts. When Q3 **85** is on, the resulting voltage on Pin **11** of U8-C **88** is very close to the voltage of no pressure being present in the cannula, thereby preventing the average pressure from being influenced by the pressure associated with the flow of oxygen.

[0044] The battery management system, as shown in **FIG. 11**C, consists of a benchmark BQ2002TSN (U1) battery management chip **91**, a Burr-Brown operational amplifier, UPA2334UA (U13) **146**, an Astec DC-DC 5 volt converter (DC-**1**) **89**, an MJE3055T power transistor (Q6) **131**, and two supporting MOSFET transistors, IRF9Z34 (Q4) **132** and BS170 (Q5) **133**. The operation of this circuit follows: The microcontroller **77** controls the supply voltage (VDD) to the battery-management chip **91**. The battery-management chip **91** reads battery voltage via resistors R1 **134** and R2 **135**. When power is applied via the external power supply, the microcontroller Pin **36** supplies five volts to Pin **6** of the battery-management chip **91**, turning it on. When power is first applied to the battery-management chip, it goes to a fast-charge charging cycle. The cycle causes Pin **8** of the battery-management chip **91** to output five volts and turn on Q5 **133** which turns on Q4 **132**, allowing a nominal 1.5 amps of current to flow into the battery.

[0045] The nominal 1.5 amps of current is derived from the constant-current generator that consists of U13 **99**, a DC-DC 5 volt converter (DC-**1**) **89**, power transistor (Q6) **131**; and two supporting MOSFET transistors (Q4) **132** and (Q5) **133**. The operation of this circuit follows: The DC-DC converter **89** raises the external 13.5 volt power-supply voltage to 18.5 volts. When a five-volt signal is present on Pin **8** of the battery-management chip **91**, Q5 **133** turns on and then turns on Q**4131**. Now the Burr Brown op-amp U13 **99** measures the differential voltage across R65 **136**. When the voltage across R65 **136** is 75 mV, the Burr-Brown op-amp maintains Q6 **131** so that 1.5 amps of current flows through it as long as Pin **8** of the battery-management chip **91** is at logic high (five volts).

[0046] The battery-management chip **91** monitors the charging cycle through Pin #**5**, the TS pin. This pin, in conjunction with a 10 k thermistor **137** in the battery pack, provides temperature feedback from the battery pack in the form of voltage. The TS pin samples the voltage from the battery every 19 seconds and compares it to the three samples measured earlier. If the voltage has fallen 25 mV or more, fast charge is terminated.

[0047] The valve control (PSA) is illustrated in **FIG. 11D**. The microcontroller controls valve drivers U5 **138**, U6 **139** and U7 **140**. These consist of the PSA valves **40**, **42**, **44**, **46**, **52** and the OCD valve **74**.

[0048] Each PSA valve is turned on via the drivers according to the following timing sequence:

Open Valve	Open Time
FB, WA	6 sec
FA, EQ	1 sec
FA, WB	6 sec
FB, EQ	1 sec

[0049] FA=Feed valve A (**40**)

[0050] FB=Feed valve B (**42**)

[0051] WA=Waste valve A (**44**)

[0052] WB=Waste valve B (**46**)

[0053] EQ=Equalizing valve (**52**)

[0054] The OCD valve **74** is turned on every time the pressure-signaling conditioning circuit detects a breath from the user. The time that the OCD valve **74** is on depends upon the setting of the flow-selector switch **86**.

Flow Selector Setting	On Time
1	82 ms
2	120 ms
3	172 ms
4	250 ms
5	310 ms

[0055] The rotary switch **86** is illustrated in **FIG. 11E**. The microcontroller **77** reads the condition of the rotary switch **86** to determine whether the unit is on or off and what flow selection the user has chosen. The unit is in the OFF position when the microcontroller **77** reads the logic low on Pin **28** of the microcontroller **77**. A logic high on Pin **28** of the microcontroller **77** indicates that the unit has been turned ON. The microcontroller **77** reads the flow selection of the rotary switch **86** via Pins **29** through **33** of microcontroller **77**. The flow selection is read for Position **1** when a logic low is read on Pin **29** of the microcontroller **77**. Flow selection 2 is read when a logic low is read on Pin **30** of the microcontroller **77**. This process repeats itself for Pins **31** through **33** for flow selections 3 through 5. The purity test button SW3 **87**, also illustrated in **FIG. 11**E, is a normally-open switch and is used to put the microcontroller **77** in one of two test modes. When the switch is in its normally-open position, a logic high is applied to Pin **18** of the microcontroller **77**, indicating normal operation. When the switch is pressed, the microcontroller **77** reads a logic low on Pin **18** and reads the condition of the rotary switch SW2 **86** to determine which of the two test modes it must run. If the rotary switch **86** is set to any flow selection between 1 and 4, the unit breathes 15 breaths per minute defaulting to flow selection 3. This is the first-test condition. The second test is initiated if the flow-selector switch is set to Position **5** and the purity test switch SW3 **87** is pressed. In this test mode, the unit breaths the following breaths per minute for three-minute intervals: 15, 17.5, 20, 22.5, 25, 27.5, 30. Both test modes continue until the unit is switched off. When the unit is turned back on again, it resumes normal operation.

[0056] The rotary switch **86** is illustrated in FIG. F. The microcontroller **77** reads the condition of the rotary switch **86** to determine whether the unit is on or off and what flow selection the user has chosen. The unit is in the OFF position when the microcontroller **77** reads the logic low on Pin **28** of the microcontroller **77**. A logic high on Pin **28** of the microcontroller **77** indicates that the unit has been turned ON. The microcontroller **77** reads the flow selection of the rotary switch via Pins **29** through **33** of microcontroller **77**. The flow selection is read for Position **1** when a logic low is read on Pin **29** of the microcontroller **77**. Flow selection 2 is read when a logic low is read on Pin **30** of the microcontroller **77**. This process repeats itself for Pins **31** through **33** for flow selections 3 through 5. The purity test button SW3 **87**, also illustrated in FIG. F, is a normally-open switch and is used to put the microcontroller **77** in one of two test modes. When the switch is in its normally-open position, a logic high is applied to Pin **18** of the microcontroller (U2) **77**, indicating normal operation. When the switch is pressed, the microcontroller **77** reads a logic low on Pin **18** and reads the condition of the rotary switch SW2 **86** to determine which of the two test modes it must run. If the rotary switch SW1 is set to any flow selection between 1 and 4, the unit breathes 15 breaths per minute defaulting to flow selection 3. This is the first-test condition. The second test is initiated if the flow-selector switch is set to Position **5** and the purity test switch SW3 **87** is pressed. In this test mode, the unit breaths the following breaths per minute for three-minute intervals: 15, 17.5, 20, 22.5, 25, 27.5, 30. Both test modes continue until the unit is switched off. When the unit is turned back on again, it resumes normal operation.

[0057] The pressure sensor **76** is illustrated in **FIG. 11A**. The high-pressure circuitry is based on Motorola pressure sensor MPX5500DP (U10) **76**. The microcontroller **77** Pin **5** reads the analog output from the pressure sensor **76**. When the pressure sensor is at two psi or lower, the microcontroller **77** signals a system failure. This condition repeats itself if the system pressure is 36 psi or higher. In addition, there is a pre-condition alarm that activates if the system pressure is 33 psi.

[0058] The Three LED's (one red, one green, one yellow) and a buzzer **128** are also illustrated in **FIG. 11F**. and **FIG. 11D**. The green LED, D9 **125**, is used during a 1.2 second start-up sequence to tell the user that he or she is turning on the unit. Green LED **130** also will flash each time a breath is detected and a pulse dose is delivered to the user. The yellow LED, D10 **126**, is used for battery charging when the unit is in the OFF condition. When the yellow LED is flashing, the unit is charging the battery. When the yellow LED **126** comes to a constant, non-flashing state, the battery is fully charged. This process takes approximately two hours and is visible only when the unit is in the OFF position. When the unit is turned ON and running off the external battery (no external power supply), the microcontroller **77** reads the battery voltage via resistor divider network R67, R68, and Pin **11** of microcontroller **77**. When the battery voltage decays to 10.9 volts, the yellow LED **126** and the buzzer **128** come on for one second for every five seconds

they are off. This indicates to the user that the battery is in a low condition and should be charged or replaced to continue operation. When the battery decays to 10.5 volts, the unit automatically shuts down and flashes the yellow LED **126** and buzzer **128** on and off at a frequency of 500 milliseconds. The red LED **127** is used as a pre-condition alarm, a system failure alarm, or an apnea alarm. The table below lists the alarms and alarm functions.

TABLE of Alarms

Audible Alarm	Visual Alarm	Indication	What to do
5-second continuous audible alarm at startup	None	unit has been turned on.	You may begin to operate the
None	Battery—Yellow Flashing when unit is OFF and plugged into power source	Battery is charging.	If the unit is unplugged from the power source and used, the battery does not supply power for the full 50 minutes.
None	Battery—Yellow Non-Flashing when unit is OFF and plugged into power source	Battery is fully charged.	If the unit is unplugged from the power source and used, the battery supplies power for the full 50 minutes.
Continuous audible alarm	Alarm—RED Non-flashing	No breath has been sensed for 30 seconds.	Check the cannula connection. Ensure that you are breathing through your nose. If the alarm persists, contact your Equipment Provider.
1-second beep every 5 seconds	Battery—YELLOW Flashing	Battery requires charging	Replace the battery, or plug the apparatus into an automobile cigarette lighter or a 120 volt outlet within 5 minutes.
½-second beep every ½ second.	Battery—YELLOW Flashing	Battery voltage is too low to operate apparatus.	Replace the battery, or plug the apparatus into an automobile cigarette lighter or a 120 volt outlet immediately.
Three ½-second beeps followed by a 5 second pause	Alarm—RED Flashing	Breathing rate is approaching the threshold of the apparatus capacity; or the apparatus is approaching general malfunction.	Reduce activity, and/or locate another source of oxygen. The apparatus can be operated in this condition.
½-second beep every ½ second	Alarm—RED Flashing	Breathing rate is exceeding the capacity of the apparatus.	Reduce activity, and/or locate and use another source of oxygen. Contact your Equipment Provider.
½-second beep every ½ second	Alarm—RED Non-flashing	General malfunction of the apparatus has occurred.	Change to another source of oxgen, and contact equipment provider. Turn off the apparatus.

[**0059**] The HR1 hour meter **122** as illustrated in **FIG. 11D** collects time when the compressor is running, up to 99,999 hours for 11 years. There is a reset button, SW1 **130**, that when pressed by a service technician, resets the hours to 0. The meter needs no external power source to maintain memory content.

[**0060**] The battery-reset circuit as shown by **FIG. 11D** consists of a micropower comparator, TLV3401IDR (U3) **94**, a 1.2 volt reference, D13 **95**, two resistor divider networks R4, R6 and R5, R6, a P-Channel MOSFET transistor ZXM61P03CT (Q7) **96**, and a five-volt regulator, LM78L05ACM (U4) **97**. When an external power supply is plugged into the unit, the voltage divider network R5 and R6 is higher than the 1.2 volt reference, which keeps the output Pin **6** of the micropower comparator U3 94 low. This low output in turn keeps Q7 96 on, supplying voltage to the input of the five-volt regulator (U4) **97**. With the external power supply plugged in, the circuit remains in this state, and the circuit board has a valid five volts from which to operate. When the battery is used with no external power supply, resistor divider network R4 and R6 monitor the battery voltage. When the battery decays to below ten volts, the voltage on Pin **2** of the micropower comparator (U3) **94** is lower than the 1.2 volt reference. This forces the output Pin **6** of the micropower comparator (U3) **94** high. This in turn turns off Q7 **96**, which shuts down the five-volt regulator U4 **97**. In this condition the circuit board draws approximately 175 uA current from the battery. The circuit remains in this condition until the battery voltage is raised above ten volts or until the external power supply is plugged in again.

[**0061**] The on-board relay circuit as shown in **FIG. 11B**. consists of comparator U11 (LM311) **98** and voltage reference U12 (LM431) **99**. This circuit speeds up the switching time of the relay when the external power supply is

unplugged from the unit and the battery must take over. During design and testing, it was found that, when the external supply is removed from the unit, a back emf from the compressor motor holds the relay open long enough for the microcontroller **77** to reset before the battery voltage can take over and run the circuit. When the compressor is removed, the switching time for the relay is adequate to switch the external power supply voltage to the battery voltage without resetting the microcontroller **77**. The circuit functions as follows: when the external power supply is first plugged into the unit, the voltage at resistor divider network R58 and R59 is above the three-volt reference set by U12 (LM431) **99**. This condition forces the output of U11 (LM311) **98** to be high, thereby turning on the relay K1 **100** as shown in **FIG. 11C**. When the external power supply is removed from the unit, the voltage across the relay coil begins to decay. When the voltage across the relay coil K1 **100** reaches eight volts, resistor dividers R58 and R59 divide this voltage so that it is below the three-volt reference set by U12 (LM431) **99**. This forces the output of U11 (LM311) **98** low, closing the relay (K1) **100** regardless of what is happening with the compressor. This prevents microcontroller resets during external and battery power-supply exchanges.

[**0062**] In the embodiment described above, the microprocessor monitors battery voltage, system pressure and flow rate. Additional embodiments are planned to include an Oxygen monitoring system. One possible position for the oxygen monitoring system **147** is illustrated in **FIG. 14**. This particular embodiment depicts the oxygen monitoring system **147** in-line before the oxygen delivery system. The oxygen monitoring system **147** is positioned between the pressure control regulator **64** and the flow control valve, however other possible positions are possible. The output of the oxygen sensor **147** will be will be monitored by the microprocessor **77**, as shown in **FIG. 14***a*. In this particular embodiment, The oxygen monitoring system **147** will share microprocessor **77** pin **11** with the battery monitoring system **149** A switching circuit **148** for switching between the oxygen monitoring system **147** and the battery monitoring system **149** is shown in **FIG. 14***a*

[**0063**] Although the apparatus according to our invention is shown by a preferred embodiment, those skilled in the art will be able, from the description of our invention as herein provided, to produce a combined PSA/OCD apparatus, the individual fluid, electric and electronic components and controls of which can be found in the art or made by one skilled in the art following a reading of this description of the preferred embodiment. It also is possible to use a three bed PSA as described in co-pending U.S. application Ser. No. 09/851,750, pending filed May 9, 2001, pending the use of which may not require a mixing tank because of the relatively constant output pressure achieved by a PSA made according to that invention. It also is possible, as illustrated schematically in **FIGS. 14 and 14**B, in include a known oxygen monitor to measure the actual rather than the calculated concentration of oxygen being delivered to the user. In addition, those skilled in the art may be able to include other known safety features for use in monitored and/or unmonitored medical purposes. If it also is desired to be able to variably control the concentration of oxygen in the product gas, then it also may be possible to incorporate into the invention a second adjustable purge loop, not shown but described in U.S. Pat. No. 5,871,564.

[**0064**] To operate the apparatus **20** the user accessible rotary switch **86** is turned to the desired "equivalent" flow rate on the operating panel both to turn on the PSA operation and to deliver oxygen at the set rate. At start-up of the apparatus, all of valves of valve block **26** are open to eliminate any back pressure and then either left open or closed in sequence through a timing mechanism of conventional switches and relay switches in programmable circuit **80**. As each of the feed, waste, and equalization valves is preferably a solenoid-type valve responsive to a turning on or shutting off of power to the valve, product-producing and regeneration operations are automatically controlled in apparatus **20** by automatically controlling the amount of time that each of the feed, waste, and equalization valves are opened and closed.

[**0065**] As shown and described, the apparatus can be powered any one of three sources, including a removable, nickel metal hydride battery pack which when fully charged can supply power to the apparatus for approximately 50 minutes without external power; an AC adapter to connect the apparatus at connector **126** to a nominal 120 volt AC outlet to convert the 120 volt AC to 13.5 volt DC; and a "cigarette lighter" adapter for a similar connection to a nominal 13.5 volt DC automobile battery. As shown, both the AC adapter and the automobile battery can power the apparatus and recharge the battery pack simultaneously, taking approximately two hours to charge the battery pack. Similarly, the battery pack may be detached from the apparatus by conventional plug means to facilitate the use of fully-charged spare battery packs.

[**0066**] It will be understood that various modifications and substitutions may be made to the described embodiment without departing from the spirit of the invention. Accordingly, the described preferred embodiment is intended for purposes of illustration and not as a limitation.

What is claimed is:

1. A compact and portable oxygen delivery apparatus for medical uses by producing from ambient air a product gas having a high concentration of oxygen and delivering the product gas to a user of the apparatus, the apparatus comprising a chassis, a pressure swing adsorption unit mounted on the chassis and comprising at least one adsorber bed to receive ambient air and adsorb nitrogen from the ambient air to produce the oxygen concentrated product gas, a product delivery unit for receiving at least a substantial portion of the product gas from the pressure swing adsorption unit, and control means for delivering the product gas to the user at selectable rates during inhalation by the user.

2. The apparatus according to claim 1 in which the chassis comprises two opposing sides and the adsorber bed is mounted on one of the sides, the pressure swing adsorption apparatus further comprising means for receiving the ambient air and valve means for controlling the flow of both the ambient air and the product gas, the valve means mounted on the other chassis side, and means for directing additional ambient air to cool the adsorber bed, the receiving means and the valve means by controlling the pattern of flow of the additional ambient air.

3. The apparatus according to claim 2, in which the directing means comprises first and second housing portions mounted, respectively, on the opposing sides of the chassis and forming an interior space between each of the housing portions and its respective chassis side, the receiving means

comprising a fan to draw air into one of the spaces, and baffle means positioned between the chassis and at least one of the housing portions for controlling the direction of flow of the additional ambient air.

4. The apparatus according to claim 3, in which the ambient air receiving means further comprises a compressor to supply the ambient air under pressure to the adsorber bed, and the product delivery unit comprises a storage tank to receive product gas from the adsorber bed and a pressure regulator to control the pressure of the product gas to be delivered to the user, the compressor mounted on the other chassis side with the valve means, and the storage tank and the pressure regulator mounted on the one chassis with the adsorber bed.

5. The apparatus according to claim 4, in which the ambient air receiving means further comprises a resonator to reduce the noise level of the intake air, the pressure swing adsorption unit further comprising means including a noise muffler for expelling the adsorbed nitrogen from the apparatus, the resonator and the muffler mounted on the one chassis side.

6. The apparatus according to claim 5, in which the additional ambient air is caused to flow in sequence over the valve means, the compressor, through the fan and then over the adsorber bed, storage tank, resonator and muffler.

7. The apparatus according to claim 6, in which the first housing portion defines access means for enabling ambient air to be drawn into the apparatus, and the second housing portion defines means enabling the additional ambient air to be expelled from the apparatus.

8. The apparatus according to claim 3, and further comprising means mounted on the chassis for setting and/or monitoring the effective flow rate and/or concentration of the product gas, and in which one of the housing portions comprises a movable section to enable access to the setting means.

9. The apparatus according to claim 8, and further comprising means on the chassis for receiving a an electrical power source.

10. The apparatus according to claim 3, and further comprising a carry handle formed with the chassis.

11. The apparatus according to claim 1, in which the control means comprises means for sensing inhalation by the user, and programmed means for delivering product gas to the user at a regulated pressure for predetermined selectable times during inhalation, and the valve means including a product delivery valve to be opened only during the selected times.

12. The apparatus according to claim 11 and further comprising at least one alarm to alert the user if the oxygen concentration in the product gas being delivered is below a predetermined amount.

13. The pressure swing adsorption apparatus of claim 11 in which the oxygen concentrated product gas is produced to be delivered at effective rates from about one liter per minute to about five liters per minute and with a concentration of about 90% oxygen.

14. The apparatus according to claim 1, and further comprising an oxygen monitor to measure the concentration of oxygen in the product gas.

15. The apparatus according to claim 14, and further comprising alarm means responsive to the oxygen monitor to warn the user when the concentration is outside a predetermined range.

16. A combined pressure swing adsorption apparatus and product gas conservation device for medical use, having operating components and baffles substantially positioned as illustrated in the drawing and substantially of a size as described in the specification.

17. An electronic circuit to control a combined pressure swing adsorption apparatus and product gas conservation device, substantially as illustrated in the drawing and substantially as described in the specification.

18. A warning and alarm system for a combined pressure swing adsorption and conservation apparatus for delivering product gas of a particular concentration range to a user, comprising a power source, means for measuring voltage input from the power source, means for selecting differing flow rates for delivering the product gas to the user, valve means responsive to inhalation by the user for activating the flow of product gas, and means responsive to the voltage, selecting means and the rate of activation of the valve means for signaling a warning and/or an alarm when the concentration of the product gas is outside the range.

* * * * *