US006471744B1

(12) **United States Patent**
Hill

(10) **Patent No.: US 6,471,744 B1**
(45) **Date of Patent: Oct. 29, 2002**

(54) **VACUUM-PRESSURE SWING ABSORPTION FRACTIONATOR AND METHOD OF USING THE SAME**

(75) Inventor: **Theodore B. Hill**, San Diego, CA (US)

(73) Assignee: **SeQual Technologies, Inc.**, San Diego, CA (US)

(*) Notice: Subject to any disclaimer, the term of this patent is extended or adjusted under 35 U.S.C. 154(b) by 0 days.

(21) Appl. No.: **09/931,966**

(22) Filed: **Aug. 16, 2001**

(51) **Int. Cl.**[7] **B01D 53/053**

(52) **U.S. Cl.** **95/19**; 95/101; 95/102; 95/105; 95/130; 96/113; 96/124; 96/130; 96/142; 96/143

(58) **Field of Search** 95/96–98, 100–105, 95/130, 19, 21, 22; 96/108, 130, 143, 144

(56) **References Cited**

U.S. PATENT DOCUMENTS

3,923,477	A		12/1975	Armond et al.	
4,000,990	A		1/1977	Bingham	
4,065,272	A		12/1977	Armond	
4,449,990	A	*	5/1984	Tedford, Jr.	95/102 X
4,848,985	A	*	7/1989	Sadkowski	95/100
5,074,892	A		12/1991	Leavitt	
5,156,657	A	*	10/1992	Jain et al.	95/101
5,268,021	A		12/1993	Hill et al.	
5,411,578	A	*	5/1995	Watson et al.	95/101
5,413,625	A		5/1995	Chao et al.	
5,415,683	A		5/1995	Leavitt	
5,429,666	A	*	7/1995	Agrawal et al.	95/101
RE35,099	E	*	11/1995	Hill	95/98
5,540,758	A	*	7/1996	Agrawal et al.	95/101
5,871,565	A	*	2/1999	Leavitt	95/101 X
5,882,380	A	*	3/1999	Sircar	95/100 X
6,068,680	A	*	5/2000	Kulish et al.	95/98
6,143,056	A		11/2000	Smolarek et al.	
6,344,069	B2	*	2/2002	Smolarek et al.	95/101 X

* cited by examiner

Primary Examiner—Robert H. Spitzer
(74) *Attorney, Agent, or Firm*—Procopio, Cory, Hargreaves & Savitch, LLP

(57) **ABSTRACT**

The present invention involves a vacuum-pressure swing adsorption process for the separation of components of a fluid mixture. The process includes (a) transferring a fluid mixture through an adsorbent bed at an elevated pressure P_h so as to produce a purified product fluid; (b) venting the adsorbent bed down to an ambient fluid pressure P_a; (c) applying a vacuum force to the adsorbent bed to bring the adsorbent bed to a reduced pressure P_l; and (d) venting the adsorbent bed up to an ambient fluid pressure P_a.

59 Claims, 10 Drawing Sheets

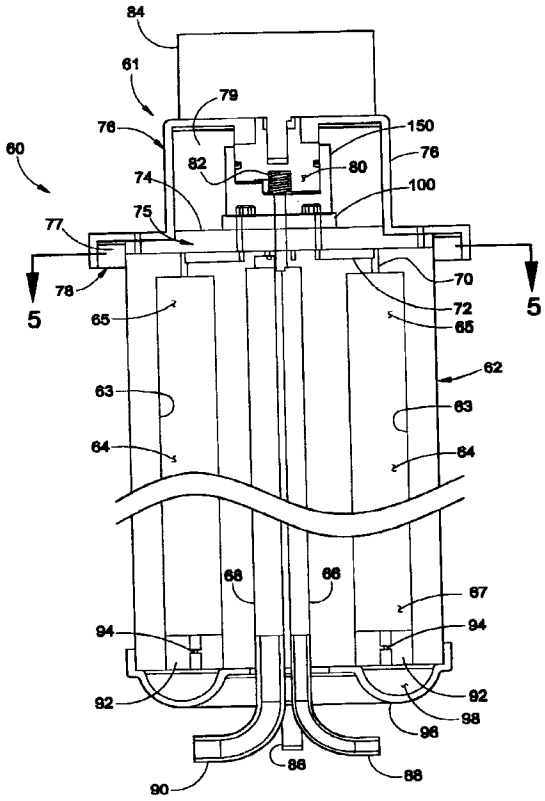

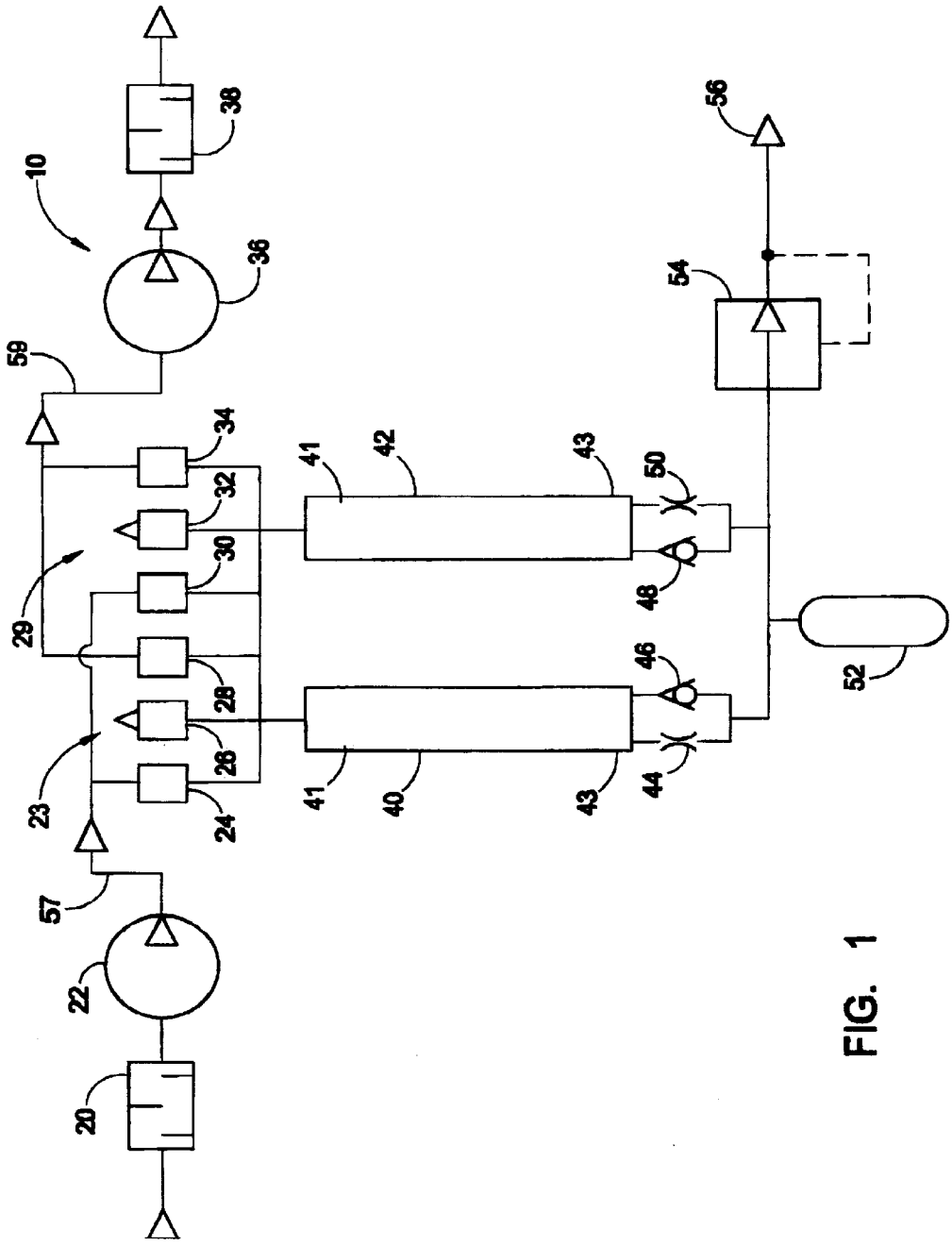
10
20
22
23
24
26
28
29
30
32
34
36
38
40
41
42
43
44
46
48
50
52
54
56
57
59

FIG. 1

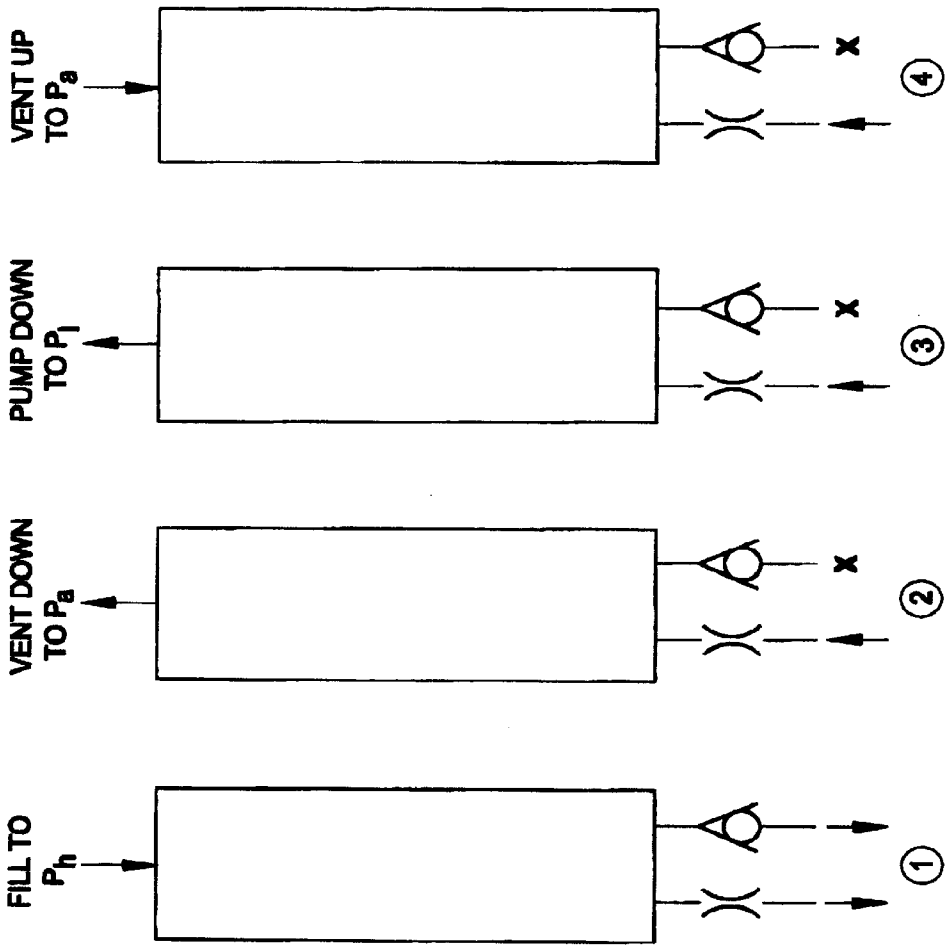

FIG. 2

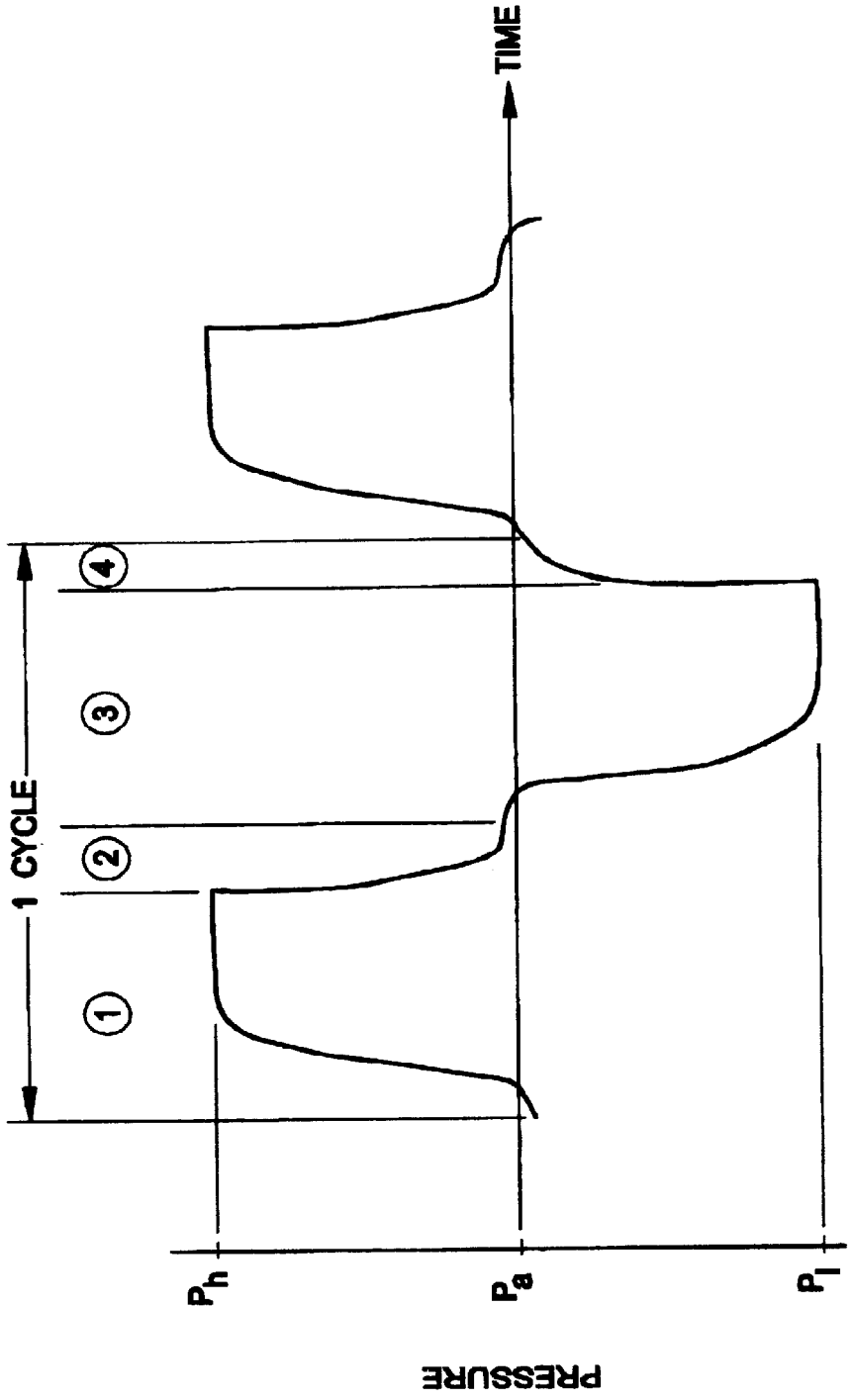

FIG. 3

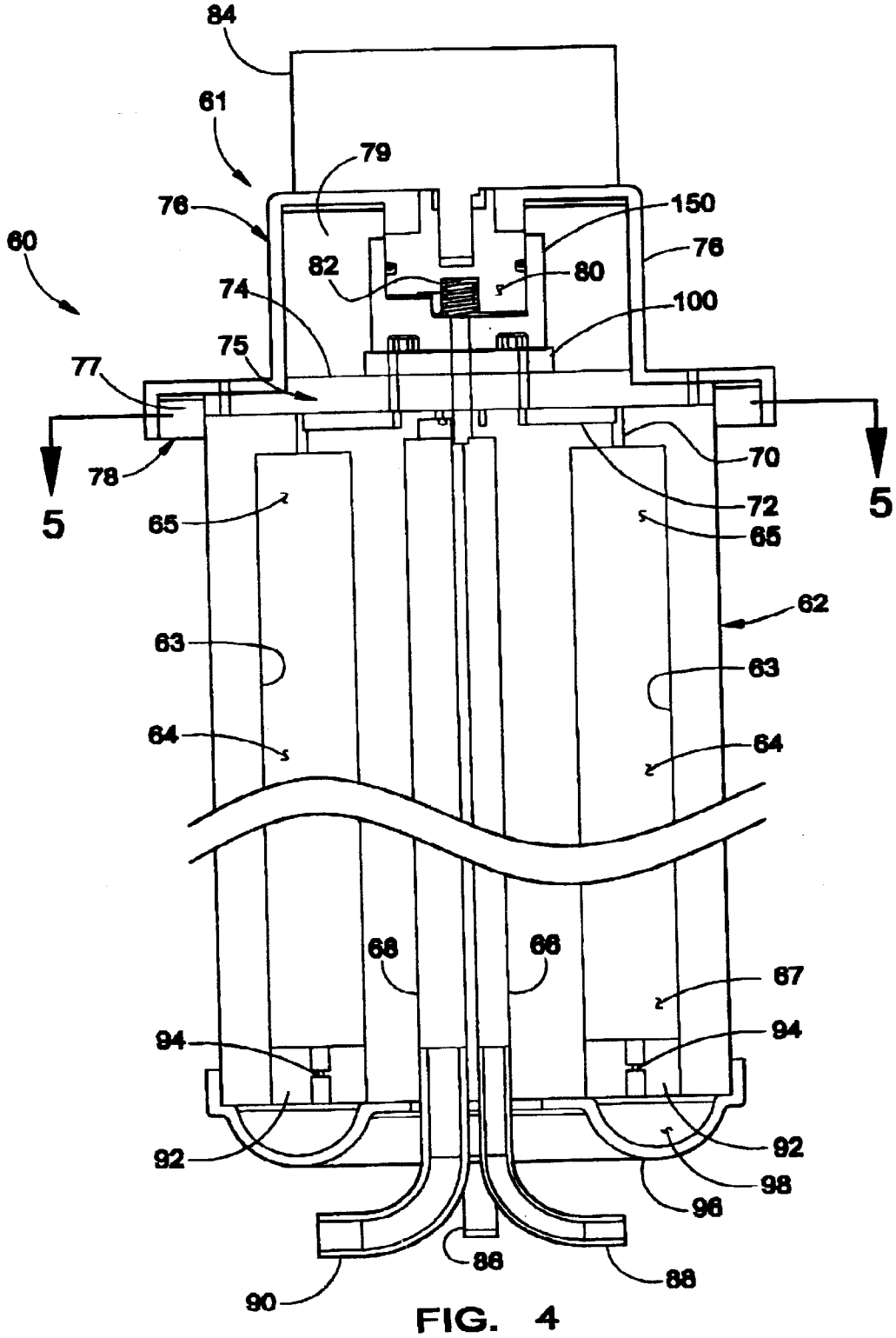
84
61
79
76
150
60
76
82
80
74
100
75
77
70
78
72
5
5
65
65
62
63
63
64
64
68
66
67
94
94
92
92
98
96
86
88
90

FIG. 4

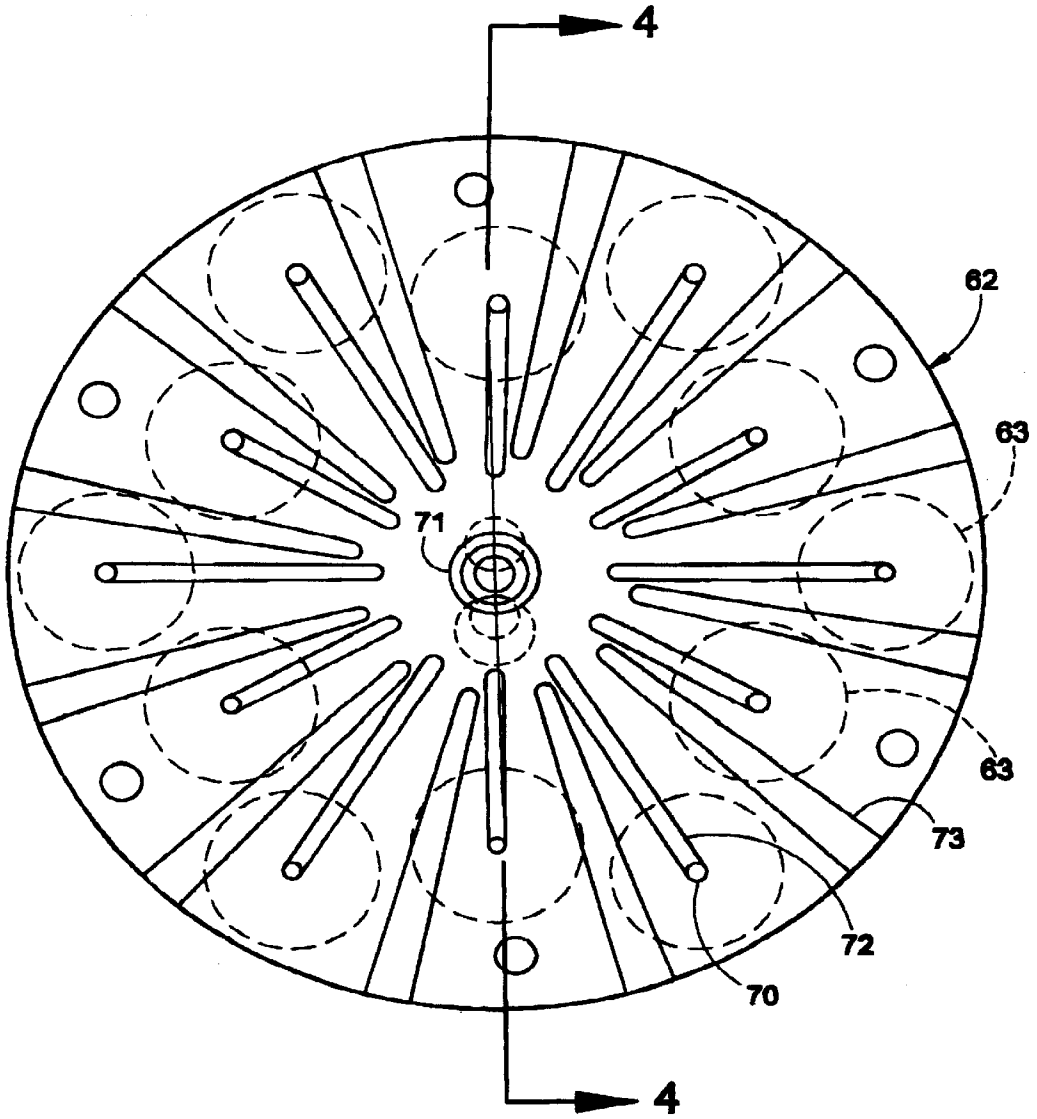

FIG. 5

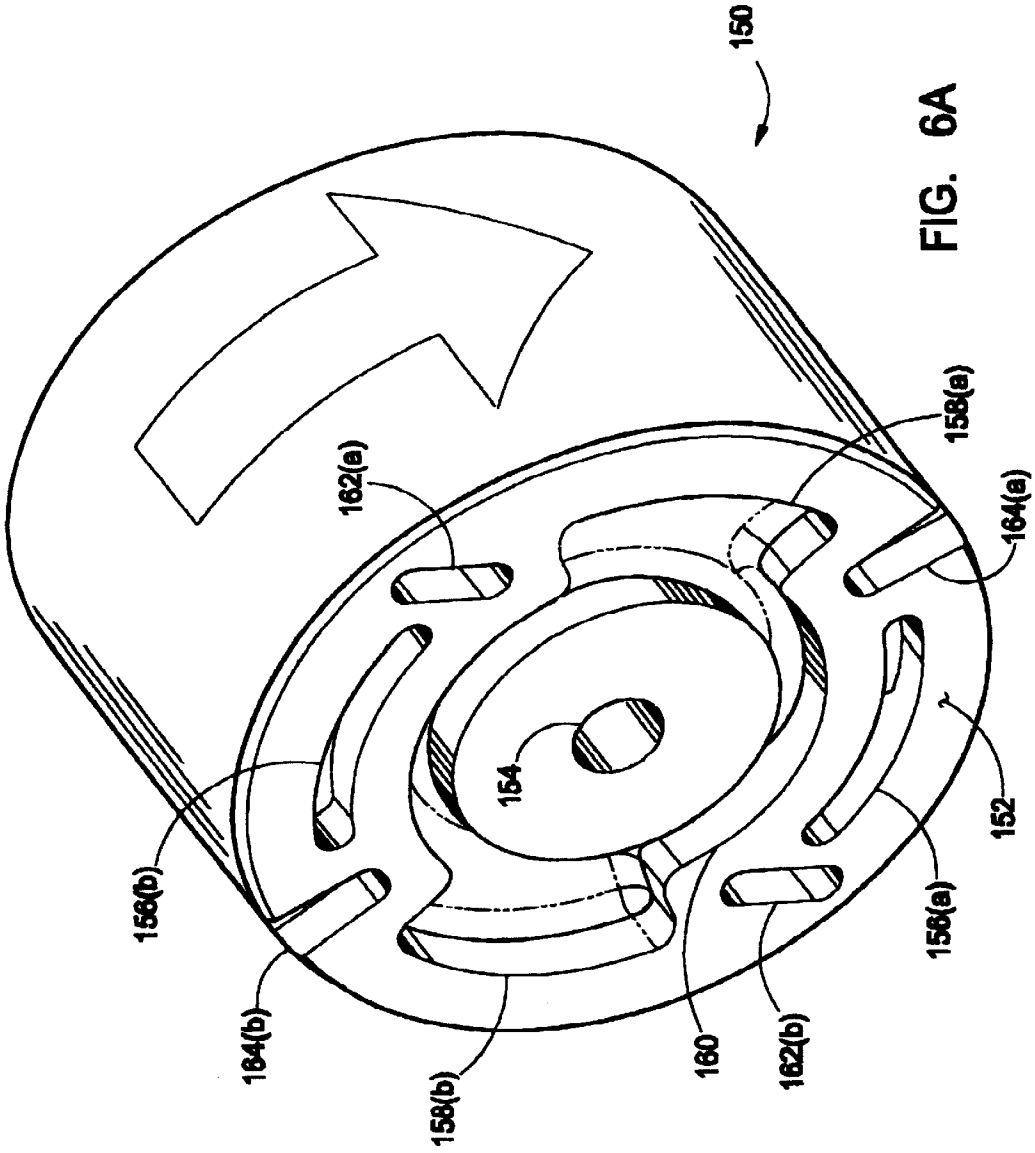

FIG. 6A

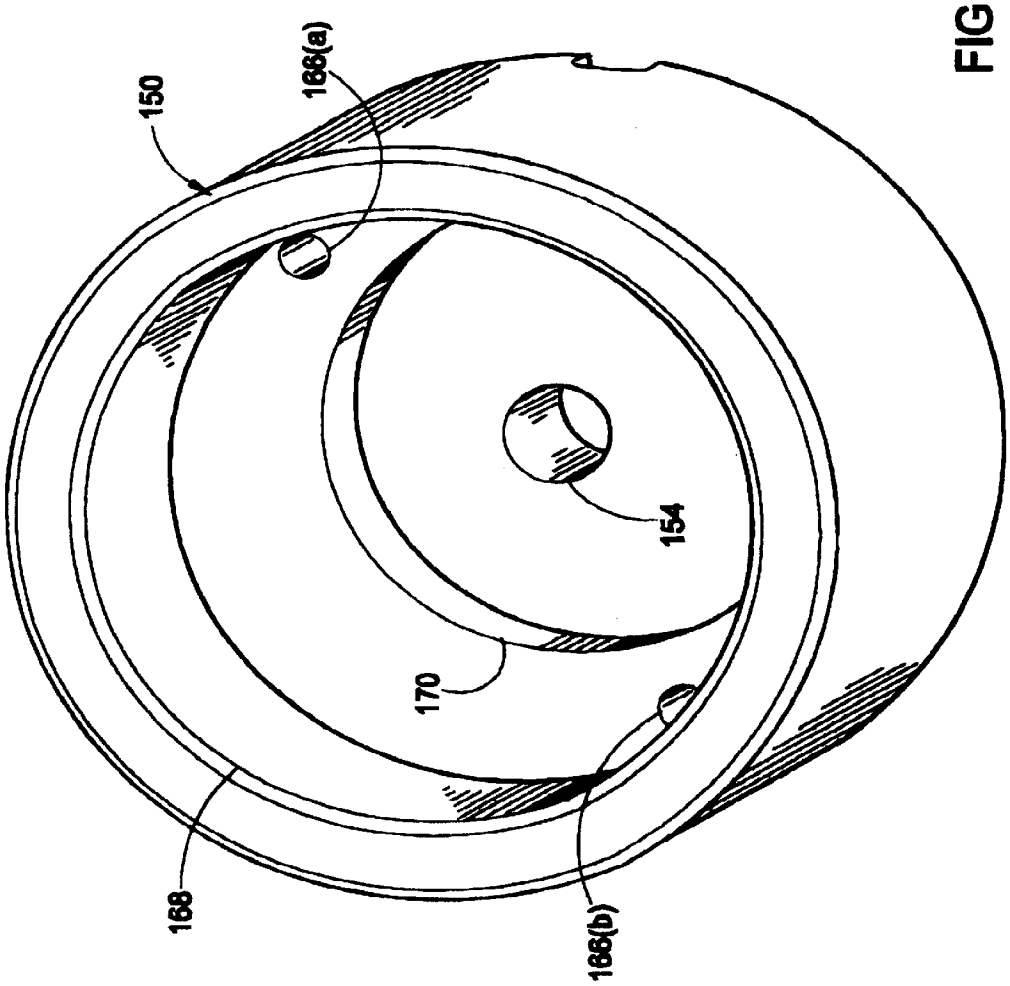

FIG. 6B

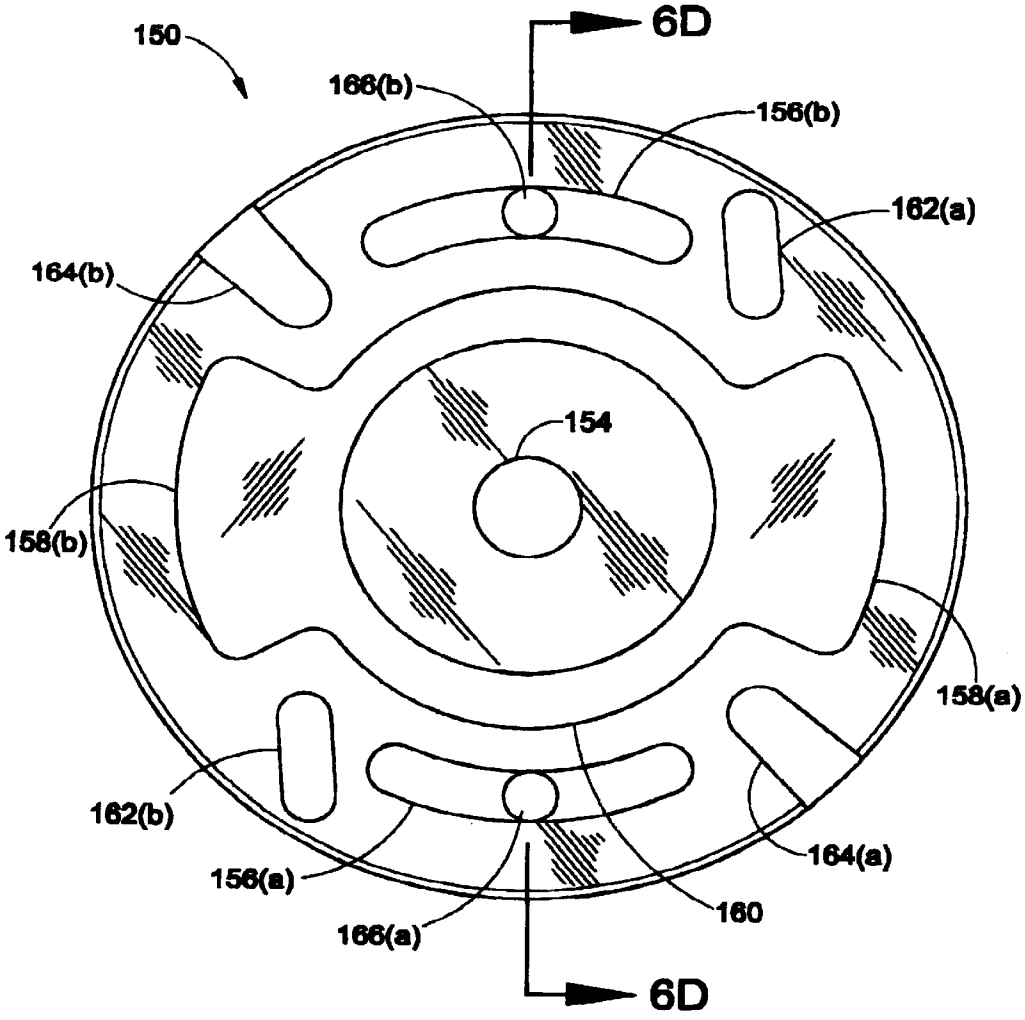
150
6D
166(b)
156(b)
162(a)
164(b)
154
158(b)
158(a)
162(b)
164(a)
156(a)
160
166(a)
6D

FIG. 6C

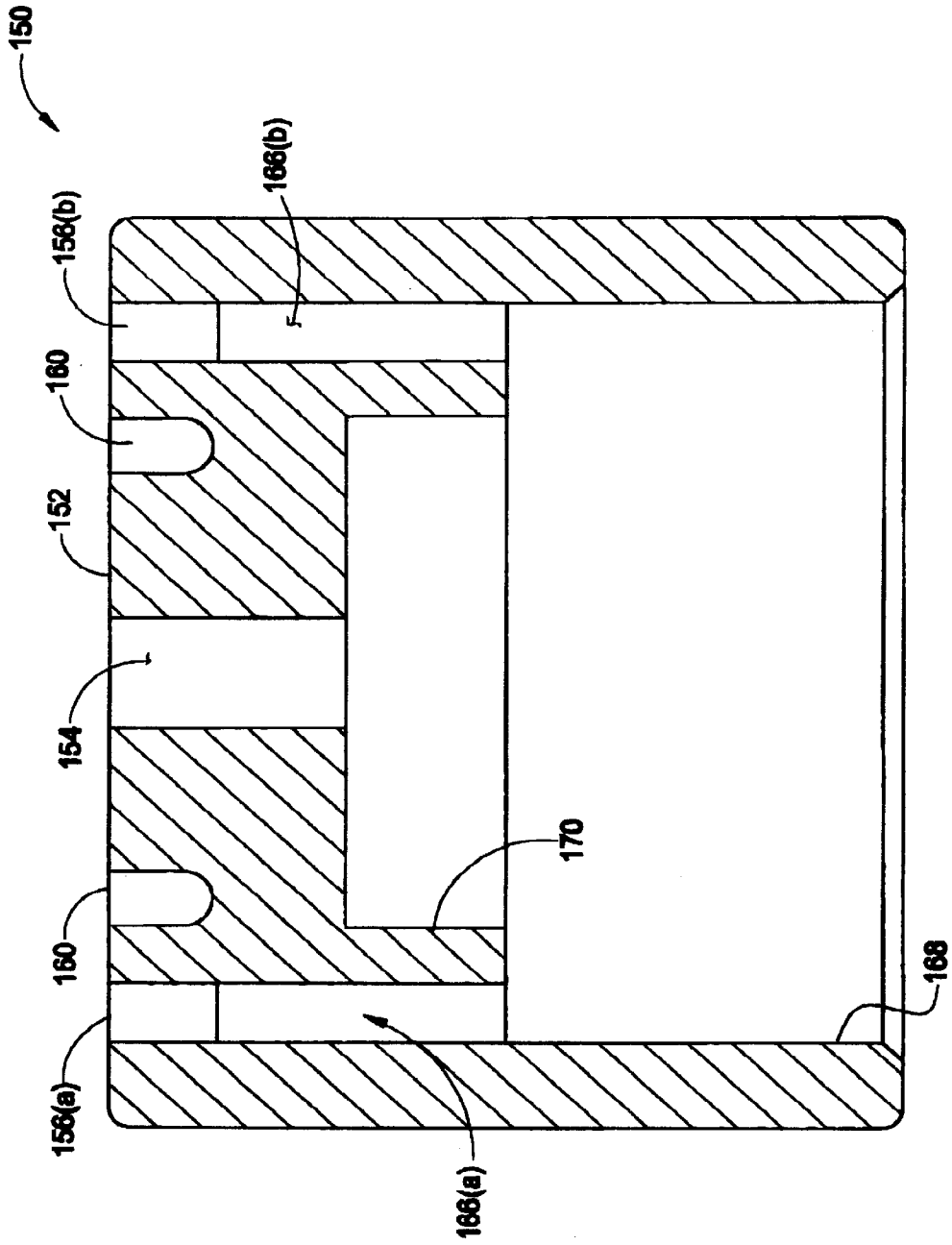

FIG. 6D

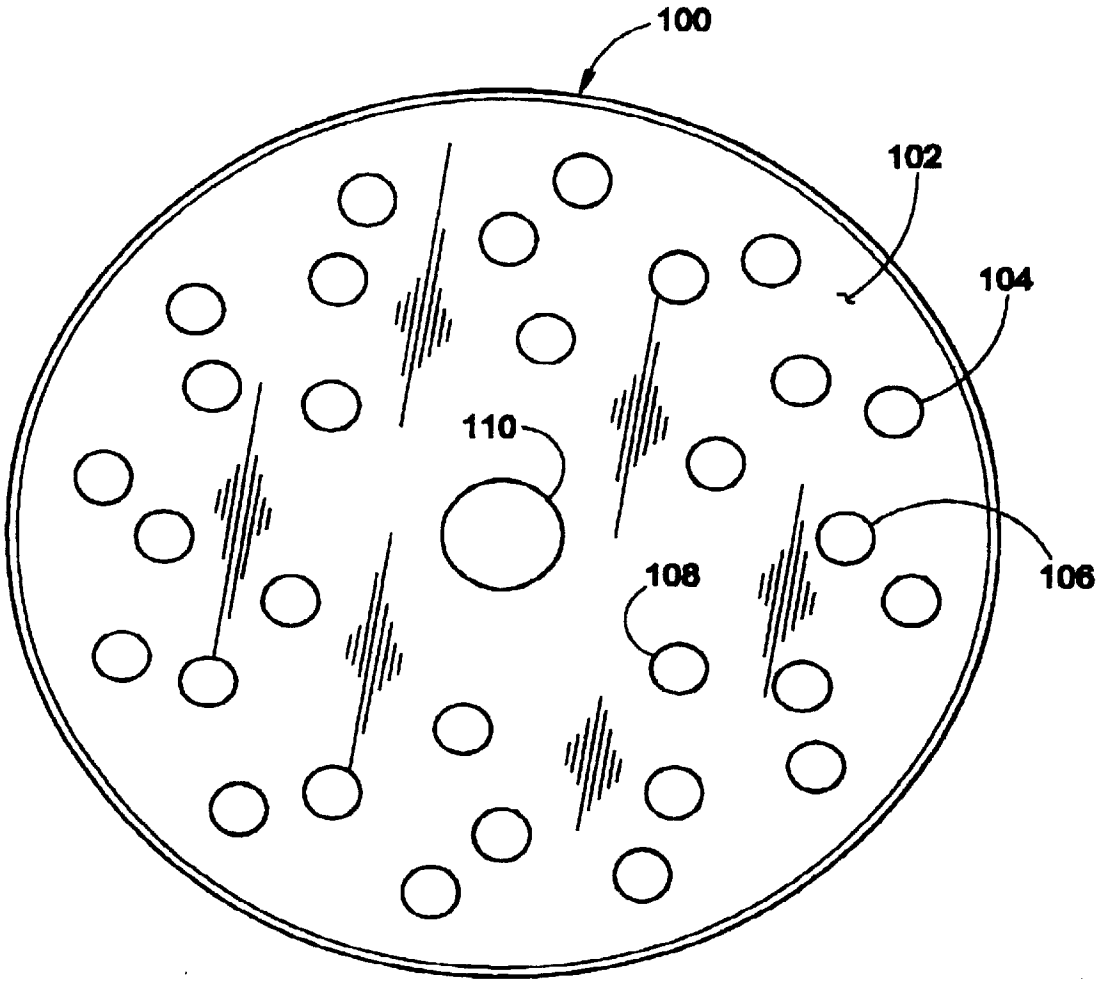

FIG. 7

VACUUM-PRESSURE SWING ABSORPTION FRACTIONATOR AND METHOD OF USING THE SAME

FIELD OF THE INVENTION:

This invention relates to vacuum-pressure swing adsorption (VPSA) fractionators and methods.

BACKGROUND OF THE INVENTION:

With the advent of new adsorbent technology for the separation of nitrogen from oxygen, it has proven advantageous to operate air separation plants with a vacuum-pressure swing adsorption ("VPSA") cycle. The vacuum-pressure swing cycle can give better recovery and specific product compared to pressure swing only or vacuum swing only.

U.S. Pat. No. 5,074,892 ("892") discloses a VPSA cycle and compares the VPSA cycle with various parameters and adsorbents to the PSA cycle. It is shown that low pressure ratios in combination with highly lithium exchanged zeolite molecular sieves can yield lower input power and better productivity than other cycle and adsorbent combinations for large industrial systems (15 ton-per-day oxygen production). The definition of pressure ratio is the ratio of the peak adsorption pressure (P_h) to the minimum desorption pressure (P_l). Of course, these pressures must be in terms of absolute pressure.

Despite the very good recovery factors vacuum-pressure swing cycles can achieve, they still require too much input work to compress the feed gas and/or evacuate the waste gas to make them practical in smaller concentrators such as portable oxygen concentrators. For instance, in the case of a small, portable oxygen concentrator for medical use such as that described in U.S. patent application Ser. No. 09/632,099, filed Aug. 3, 2000, which is hereby incorporated by reference as though set forth in full, it is desirable to minimize the power required for compression and evacuation so that the concentrator can have a greater operating duration with a fixed mass of battery pack.

Other VPSA systems such as stationary VPSA systems could also benefit from a development that reduced the power required for compression and evacuation.

U.S. Pat. No. 5,415,683 ("683") describes a VPSA system for the production of oxygen from air including a discrete valving scheme. A sequence of six process steps is claimed including a vent-down (or counter-current depressurization to an intermediate pressure) and a product gas repressurization to an intermediate pressure.

U.S. Pat. No. 3,923,477 ("477") describes a VPSA system including a discrete valving scheme that allows for a vent-down step after a fluid mixture is supplied to an adsorbent bed so as to produce a purified product fluid. In the vent-down step, the valving scheme causes the feed end of the adsorbent bed to communicate with the ambient so that the adsorbent bed is vented down to an intermediate level, atmospheric pressure, between filling the adsorbent bed and evacuating the adsorbent bed. The '477 patent does not provide for a vent-up step between evacuating the adsorbent bed and filling the adsorbent bed. Instead the '477 patent provides for back-fill from the product reservoir or from an adjacent bed to raise the pressure in the adsorbent bed to an intermediate level.

U.S. Pat. No. 4,000,990 ("990") describes an apparatus similar to the '477 patent in that a vent-down step, but no vent-up step, is provided. Instead of a vent-up step, the '090 patent describes repressurizing the adsorbent bed with product gas.

U.S. Pat. No. 4,065,272 ("272") describes an apparatus similar to the '477 patent in that a vent-down step, but no vent-up step, is provided. Instead of a vent-up step, the '272 patent describes back filling the adsorbent bed with product gas.

All of the prior art systems are undesirable for four reasons.

1. These prior art systems all use fluid that has been supplied by the compressor to fill the adsorbent bed. They may use some percentage of product gas for filling the product bed, but this fluid has also been through the compressor and had its pressure raised. With the present invention, it is possible to partially fill the adsorbent bed for "free" with fluid supplied strictly from the ambient and not requiring any compression work.
2. The valving, piping and manifolding of the prior art schemes are more complex and costly.
3. Some of the prior art schemes require valving at the product end of the adsorbent beds that connects to the feed end of the adsorbent beds. This type of valving is prone to leakage of the feed gas into the product gas and thus directly impacts the purity of the product gas.
4. The prior art requires a larger proportion of product gas to back fill the adsorbent bed and hence may limit the recovery or productivity of these systems.

SUMMARY OF THE INVENTION

Accordingly, an aspect of the present invention involves a vacuum-pressure swing adsorption process for the separation of components of a fluid mixture where a vent-up step is provided. The vent-up step reduces the amount of feed fluid handled by the compressor, reducing the power consumed in the process. Also, a vent-down step, as known in the prior art, is provided as part of the present invention. The vent-down step reduces the amount of waste fluid handled by the vacuum pump, further reducing the power consumed in the process. An exemplary VPSA process cycle includes (a) transferring a fluid mixture through an adsorbent bed at an elevated pressure P_h so as to produce a purified product fluid; (b) venting the adsorbent bed down to an ambient fluid pressure P_a; (c) applying a vacuum force to the adsorbent bed to bring the adsorbent bed to a reduced pressure P_l; and (d) venting the adsorbent bed up to an ambient fluid pressure P_a.

Another aspect of the present invention involves a vacuum-pressure swing adsorption system for the separation of components of a fluid mixture. The system includes a plurality of adsorbent beds and a valve assembly to provide valving action to transfer a fluid mixture through each adsorbent bed at an elevated pressure P_h so as to produce a purified product fluid, vent the adsorbent bed down to an ambient fluid pressure P_a, cause a vacuum force to be applied to the adsorbent bed to bring the adsorbent bed to a reduced pressure P_l, and vent the adsorbent bed up to an ambient fluid pressure P_a. In a preferred implementation of this aspect of the invention, a rotary valve assembly, especially a face-seal type rotary valve assembly is used. The rotary valve assembly greatly simplifies the routing of fluid flows while packing the fluid distribution function into a very small space. The rotary valve assembly also uses very little power and is known to have very high reliability.

These and other further objects and advantages will be apparent to those skilled in the art in connection with the

drawings and the detailed description of the preferred embodiments set forth below.

BRIEF DESCRIPTION OF THE DRAWINGS

The drawings illustrate both the design and utility of preferred embodiments of the present invention, wherein:

FIG. **1** is a schematic representation of a vacuum-pressure swing adsorption ("VPSA") system constructed in accordance with an embodiment of the invention;

FIG. **2** illustrates four steps of an exemplary VPSA process that may occur using the VPSA system illustrated in FIG. **1** or FIG. **4** discussed below;

FIG. **3** is a graph showing the pressure in an adsorbent bed as a function of time for each step of the VPSA process shown in FIG. **2**;

FIG. **4** is a longitudinal sectional view of a VPSA system constructed in accordance with an additional embodiment of the invention taken along lines **4**—**4** of FIG. **5**;

FIG. **5** is an end view of an embodiment of an adsorbent bed body used in the VPSA system of FIG. **4** taken along line **5**—**5** in FIG. **4**;

FIG. **6**A is a bottom perspective view of an embodiment of a rotor shoe of the rotary distribution valve assembly;

FIG. **6**B is a top perspective view of the rotor shoe illustrated in FIG. **6**A;

FIG. **6**C is a bottom plan view of the rotor shoe illustrated in FIGS. **6**A, **6**B; and

FIG. **6**D is a cross-sectional view of the rotor shoe taken along lines **6**D—**6**D of FIG. **6**C;

FIG. **7** is a top plan view of an embodiment of a port plate of a rotary distribution valve assembly used in the VPSA system of FIG. **4**.

DESCRIPTION OF THE PREFERRED EMBODIMENTS

With reference to FIG. **1**, a vacuum pressure swing adsorption ("VPSA") system **10** constructed in accordance with an embodiment of the invention will now be described. The VPSA system **10** is a discrete valve system and is used to fractionate fluids.

As used herein the term "fluids" includes both gases and liquids. Although the present invention will be described in conjunction with the separation of oxygen from air, the present invention applies to the fractionation of other fluids such as, but not by way of limitation, the separation of nitrogen from air or the separation of hydrogen from reformer gas.

Further, although the present invention will be described in conjunction with a VPSA system, the invention may be used in other systems where there is a large feed fluid reservoir at some pressure P_a that waste gas may be dumped into. The most common uses are atmospheric separations, but other separations are possible. The only requirements are for there to be three relative pressure levels, P_h, P_a and P_l. Their absolute level relative to standard atmospheric pressure does not matter.

The discrete valve VPSA system **10** includes a compressor inlet muffler/filter **20** through which air is drawn by a compressor **22** to a first feed end valve assembly **23**. The first feed end valve assembly **23** may include the following **2**-way valves: inlet valve **24**, vent valve **26**, and vacuum valve **28**. A second valve assembly **29** includes inlet valve **30**, vent valve **32**, and vacuum valve **34**. A vacuum pump **36** is connected to the vacuum valves **28**, **34** and expels exhaust fluid through an exhaust muffler **38**. The compressor **22** and the vacuum pump **36** are preferably integrated and operate from a single motor.

A pair of adsorbent beds **40**, **42** communicate at feed ends **41** with the valve assemblies **23**, **29** and at product ends **43** with a first orifice **44** and check valve **46**, and a second orifice **50** and check valve **48**. In alternative embodiments, no orifices **44**, **50** are present at the product ends **43** or the orifices **44**, **50** and check valves **46**, **48** are replaced with one or more discrete valve assemblies or other valve assembly (e.g., rotary valve assembly). The orifices and check valves control the flow of product fluid to a product reservoir **52** and a reducing regulator **54**. Product gas flows out of the system **10** at a product outlet **56**. Although a pair of adsorbent beds **40**, **42** are shown, in alternative embodiments, the number of adsorbent beds may be greater than two.

With reference additionally to FIG. **2**, an exemplary VPSA process that may be run on the system **10** will now be described. Air (or another fluid mixture) is brought into the system **10** through the compressor inlet muffler/filter **20** and then enters the compressor **22**. The compressor **22** raises the fluid mixture pressure from ambient pressure P_a, which is preferably atmospheric pressure, to an elevated or high pressure P_b. The compressed fluid mixture is directed to two-way inlet valves **24**, **30**. For process step **1** (FIG. **2**) to occur in adsorbent bed **40**, valve **24** will open and allow the flow of the compressed fluid mixture into the adsorbent bed **40**. Purified product fluid will flow out of the adsorbent bed **40**, predominantly through the check valve **46** and a portion through the orifice **44**.

Product fluid flows through the pressure-reducing regulator **54** to the product outlet **56**. Some of the product fluid will pressurize the product reservoir **52**. The product reservoir **52** serves as a source for purge flow for the adsorbent bed **42**. Purge flow is metered into the adsorbent bed **42** through the orifice **50**.

While process step **1** is occurring in adsorbent bed **40**, process step **3** (FIG. **2**) is occurring in adsorbent bed **42**. Valve **34** is open allowing the connection of the adsorbent bed **42** to the vacuum pump **36**. In a two adsorbent bed system as shown in FIG. **1**, the adsorbent beds **40**, **42** are always 180 degrees out of phase.

After a certain period of time, process step **1** is completed in adsorbent bed **40** and the system transitions to the next process step. The length of the process step **1** is set by the occurrence of break-through in the adsorbent bed **40**, i.e., duration of time for an impurity to break-through to the product end of the adsorbent bed. The length of time of the process step **1** is preferably set to be just shorter than the breakthrough time.

At the start of process step **2**, the valve **24** closes and two-way valve **26** opens. Valve **26** connects the adsorbent bed **40** to the ambient fluid at ambient pressure P_a. Because of the elevated pressure, P_l, in the adsorbent bed **40**, flow from the adsorbent bed **40** to the ambient occurs. This portion of the cycle is continued only until the pressure in the adsorbent bed **40** approaches the ambient pressure P_a. Simultaneous with the vent flow out valve **26**, product purge flow enters the adsorbent bed through the orifice **44**. In an alternative embodiment, there may be no purging, and hence no requirement for orifices **44** and **50**.

Simultaneously, in the adsorbent bed **42**, process step **4** is underway. Valve **32** is open, allowing flow from ambient into the adsorbent bed **42** that starts at the low pressure P_l.

Once pressures in both adsorbent beds **40**, **42** approach ambient pressure P_a, process step **2** is completed in adsorbent bed **40** and the system transitions to the next step.

At the start of process step **3**, the valve **26** closes and the two-way valve **28** opens. Valve **28** connects the adsorbent bed **40** to the vacuum pump **36**. Vacuum pump **36** reduces the pressure in the adsorbent bed **40** to low pressure P_l. Fluid evacuated from the adsorbent bed **40** by the vacuum pump **36** is discharged to the ambient through the vacuum pump exhaust muffler **38**. Product purge flow will continue to flow through the orifice **44** into the adsorbent bed **40**. As mentioned above, in an alternative embodiment, there may be no purge flow. The duration of process step **3** is set to be the same as the duration of process step **1**. Adsorbent bed **42** undergoes process step **1** while adsorbent bed **40** is in process step **3**. At the completion of process step **3**, the adsorbent bed **40** is regenerated and prepared for another adsorption cycle.

At the start of process step **4**, the valve **28** closes and valve **26** opens. Valve **26** allows ambient fluid at ambient pressure P_a to fill the adsorbent bed **40**. Product flows into the adsorbent bed **40** through the orifice **44** as well, pre-filling the product end of the adsorbent bed with high purity fluid. The adsorbent bed **42** is 180 degrees out of phase and process step **2** is occurring in that bed. Upon completion of process step **4** in adsorbent bed **40**, the cycle is complete and begins again with process step **1**.

FIG. **3** shows graphically the pressure level in an adsorbent bed as a function of time. The four process steps **1–4** are identified on the graph.

It should be clear to one skilled in the art that the two banks of three two-way valves (**24**, **26**, **28** and **30**, **32**, **34**) connected to each of the adsorbent-beds can be replaced with two four-way, three position, spring centered valves.

The preferred embodiment of the present invention is to couple the compressor and vacuum pump together with one driving motor. This reduces system size and complexity. It should also be clear to one skilled in the art that the compressor and vacuum pump may run continuously throughout the cycle. Since process steps **2** and **4** are relatively short it will not pose a problem for the compressor and vacuum pump to continue operation with their outlet and inlet respectively shut off for a brief duration. The internal volume of the compressor discharge line **57** and the vacuum pump inlet line **59** can be sized so as to buffer the compressor and vacuum pump during process steps **2** and **4** so that no extreme pressure levels are obtained.

Another solution that wholly avoids extreme pressure levels during process steps **2** and **4** is to increase the number of adsorbent beds to greater than two. It has been found by the inventor that twelve adsorbent beds operating in a PSA cycle makes for a substantially steady state output pressure from a compressor. This effect is described in U.S. Pat. No. 5,268,021 to Hill, et al. which is incorporated by reference as though set forth in full.

Control of the complete process can be based on either time intervals or on pressure levels. The time interval based control scheme is programmed to have constant time intervals for each process step. The pressure level control scheme causes process steps to occur when certain pressure levels are obtained at key locations in the system. For example, one or more pressure sensors may be located at or near the feed ends **41** and/or product end **43** of one or more beds. The valve assemblies **23**, **29** may be controlled by a controller based on the pressure sensed.

Although the VPSA system and method has been described in conjunction with a discrete valve assembly, other types of valve assemblies with valves located in different locations than that shown in FIG. **1** may be used. For example, with reference to FIG. **4**, a VPSA system **60** including a rotary valve assembly **61** will now be described. A VPSA system with a rotary valve assembly is preferred over other valve assemblies because a rotary valve assembly greatly simplifies the routing of fluid flows while packing the fluid distribution function into a very small space. The rotary valve assembly also uses very little power and has very high reliability.

The VPSA system **60** is generally cylindrical in shape and is compact, preferably about 3 inches in diameter and about 6 to 8 inches long. In a preferred implementation, the VPSA system **60** is part of a portable oxygen concentrator. The system **60** is preferably capable of delivering oxygen gas at a flow rate of up to 3 LPM, and at a purity better than 90%.

The system **60** preferably includes a monolithic adsorbent bed body **62** molded of plastic resin. The adsorbent bed body **62** could alternately be made by extrusion, casting, machining or the like and could alternately be made from lightweight metal. The body **62** includes multiple receptacles or cavities **63** for carrying adsorbent beds **64**.

The adsorbent beds **64** include a packed particulate adsorbent that preferentially adsorbs nitrogen relative to oxygen in the feed air so that oxygen is produced as the non-adsorbed product gas. An example of a sieve material that may be used in the beds **64** is described in U.S. Pat. No. 5,413,625 to Chao, et al., which is incorporated by reference as though set forth in full. The sieve material may be a Lithium-X Zeolite (Li-X) that allows for a high exchange of Lithium ions. The bead size may, for example, be 0.2–0.6 mm. Alternately, the zeolite may be in a monolithic form rather than in a packed particle bed. For example, the zeolite could be coated on a thin foil or paper and rolled up to form a monolith. Another sieve material that may be used is Calcium-X (Ca-X). In an alternative embodiment, the adsorbent beds **64** may be layered to guard against water vapor intrusion on the Li-X sieve material. For example, the adsorbent bed **64** may include a top layer of activated alumina, silica gel, or Sodium-X molecular sieve material near a feed end **65** of the adsorbent bed **64** and a bottom Li-X sieve material layer. The top layer adsorbs and desorbs water with each pressure swing in the adsorbent bed **64** and the bottom layer fractionates the other components of the feed mixture.

Although the VPSA system **60** is described below as having twelve adsorbent beds **64**, the VPSA system **60** may include two or more adsorbent beds **64** and preferably has four to sixteen adsorbent beds **64**. In an alternative embodiment, the body **62** may be replaced with multiple adsorption vessels. Each adsorbent bed **64** includes a feed end **65** and a product end **67**.

Each adsorbent bed **64** is sealed off with an adsorbent bed cap **92**. In the preferred embodiment, the adsorbent bed caps **92** are retained in place by the product head **96**. An optional compression spring and filtering means (not shown) are used to keep a packed particulate adsorbent bed fixed during operation. If a monolith is used instead, springs and filtering means are not required.

The adsorbent bed cap **92** is made with a flow control orifice **94** that controls product gas flow out of the adsorbent bed and purge gas flow into the adsorbent bed. Alternately, the flow control orifice **94** may be replaced by a check valve (not shown) that only allows the flow of product gas out of the adsorbent bed **64**. Another alternative is to use both a flow control orifice **94** and a check valve in parallel as suggested in FIGS. **1** and **2** for the discrete valved system.

The adsorbent bed body **62** also has a feed-air passage **66** and a vacuum passage **68** formed therein. Feed-air port **88**

and vacuum port **90** are attached to the passages **66** and **68** respectively. Similar to the system **10** described above with respect to FIG. **1**, feed air may be supplied by a compressor to the feed-air port **88** through a compressor and a vacuum force may be imparted to the vacuum port **90** by a vacuum pump. The compressor and vacuum pump are preferably integrated and operate from a single motor.

Product gas is delivered into a product tank **98** integrated with the VPSA system **60**. The product tank **98** is defined by the product head **96** and the end of the adsorbent bed body **62**. Flow control orifices **94** directly communicate with the product tank **98**. Product gas flows out of the VPSA system **60** via a product outlet port **86**.

Near the feed ends **65** of the adsorbent beds **64** are ports **70** and slots **72** that serve to connect the adsorbent beds **64** to the rotary valve assembly **61**. In another embodiment, the ports **70** and slots **72** may be used to connect the product ends **67** of the adsorbent beds **64** to the rotary valve assembly **61**. The ports **70** and slots **72** may also exist near the product ends **67** of the adsorbent beds **64**.

A plate **74** is mounted to the adsorbent bed body **62** with threaded fasteners (not shown) and a suitable sealant or gasket to form a manifold **75** that communicates a port plate or first valve member **100** of the rotary valve assembly **61** to the adsorbent beds **64** and vent-up passages **73** (FIG. **5**). With reference to FIG. **5**, the vent-up passages **73** are slots that connect vent-up ports **104** (FIG. **7**) in the port plate **100** to the ambient fluid mixture (e.g., atmospheric air) surrounding the VPSA system **60**. With reference back to FIG. **4**, an annular space **77** receives a vent-up filter **78**. The filter **78** includes a strip of open cell foam to filter the air that flows into the adsorbent beds **64** via the vent-up passages **73** in the adsorbent bed body **62**.

Although the manifold **75** is shown as having a single-piece construction, the manifold **75** may be comprised of a top member and a bottom member that form a two-piece manifold construction. The port plate **100** is mounted by an adhesive to the plate **74**. A rotor shoe or second valve member **150** of the rotary valve assembly **61** is held in axial contact and radial alignment with the port plate **100** by a rotor shaft **80**, compression spring **82** and axial and radial bearing surfaces formed between the rotor shaft **80** and a valve cover **76**. The valve cover **76** retains the rotary valve assembly **61** to the adsorbent bed body **62**. A motor **84** mounts to the valve cover **76** and engages the rotor shaft **80** to cause the rotation of the rotor shoe **150**. A compression spring **82** may be used to bias the rotary valve shoe **150** against the valve port plate **100**. The spring **82** may act as the only balancing force provided upon initial start-up of the VPSA system **60**.

Vent-down gas flows out of an interior space **79** formed between the valve cover **76** and the valve assembly **61** through a porous metal filter element or equivalent (not shown). The vent-down gas flow and vent-up gas flow are isolated from each other so that vent-down gas does not contaminate vent-up gas entering the adsorbent bed **64**.

With reference to FIG. **7**, the port plate **100** will now be described in more detail. The port plate **100** is preferably made of silicon carbide, includes a circular disk-like shape, and has a very flat, smooth engagement surface **102**. The engagement surface **102** is preferably lapped flat within about **2** light bands (0.000020 inches) to form a low-friction, long wearing surface **102**. This allows the port plate **100** to form a fluid-tight seal when pressed together with the rotor shoe **150**. The port plate **100** may be constructed of a material other than silicon carbide. For example, the port plate **100** may be made of a ceramic material. Further, the port plate **100** may have a configuration other than circular. For example, the port plate **100** may have a polygonal configuration.

The port plate **100** preferably includes a number of concentric, symmetric rings of ports that connect to the manifold **75** to direct the flow of various fluids during the cycle. The ports preferably extend completely through the valve port plate **100** in a direction generally perpendicular to the engagement surface **102**. Although the ports are generally shown as having a circular configuration, it will be readily apparent to those skilled in the art that the ports may have alternative configurations such as, but not by way of limitation, square-shaped, sector-shaped, and polygonal-shaped. The ports may also extend through the port plate **100** at a variety of angles. Preferably, all of the ports of each type have the same configuration.

Vent-up ports **104** form an outer ring of ports. The vent-up ports **104** connect to the ambient fluid mixture, e.g., atmospheric air, to supply fluid for the process step #**4** (FIG. **2**) through vent-up passages **73** (FIG. **5**). Adsorbent bed ports **106** connect to the adsorbent beds **64** through the manifold **75** via slot **72** and hole **70**. Vacuum ports **108** connect with the vacuum source through the manifold **75** and via the annular slot **71** (FIG. **5**) and vacuum passage **68**. A feed air port **110** connects with the source of pressurized feed fluid through the manifold **75** and via feed-air passage **66**.

The number of each type of port depends on certain design considerations, and may be different than that shown. The number of adsorbent bed ports **106** preferably matches the number of adsorbent beds **64** used in the process. The vent-up port **104** is paired with each adsorbent bed port **106**, so there is an equal number of vent-up ports **104** as adsorbent bed ports **106**. In an alternative embodiment, the number of vent-up ports **104** and adsorbent bed ports **106** may not match the number of adsorbent beds **64**, the number may be more or less. The number of vacuum ports **108** is driven by the flow area required for reasonable pressure drop through the valve assembly **61**. There is preferably only one feed air port **110**.

In alternative embodiments, the relative location of the ports may vary. For example, but not by way of limitation, the adsorbent bed ports **106** may be the outermost ring instead of the vent-up ports **104**.

With reference to FIGS. **6A–6D**, the rotor shoe **150** will now be described in more detail. The rotor shoe **150** is preferably circular in configuration and is made of a carbon graphite material. An engagement surface **152** of the rotor shoe **150** is preferably lapped flat similar to the port plate engagement surface **102** to form a low-friction, long-wearing surface **152**. As discussed above, this allows the rotor shoe **150** to form a fluid-tight seal when pressed together with the port plate **100**.

The rotor shoe **150** may be constructed of a material other than carbon graphite. For example, the rotor shoe **150** may be made of a ceramic or plastic material. Further, the rotor shoe **150** may have a configuration other than circular. For example, the rotor shoe **150** may have a polygonal configuration.

The following symmetrically disposed ports and channels are positioned in the engagement surface **152** of the rotor shoe **150** for communicating with the ports of the port plate **100** to direct the flow of various fluids during the cycle: a central feed air passage **154**, feed air channels **156**(*a*), (*b*), vacuum channels **158**(*a*), (*b*), vacuum connection channel **160**, vent-up channels **162**(*a*), (*b*), and vent-down channels

164(*a*), (*b*). It will be readily apparent to those skilled in the art that the ports and channels may have a configuration and/or relative locations other than that shown in FIG. 6A. Feed air channel connecting passages 166(*a*), (*b*) (FIG. 6B) supply feed air to feed air channels 156(*a*), (*b*). A reverse side of the rotor shoe 150 (FIG. 6B) has a pressure balance bore 168 that is sized to maintain a pressure force on the rotor shoe 150 that overcomes any separating pressure forces at the engagement surface 152 of the rotor shoe 150 so that good contact is made between the engagement surface of the rotor shoe 150 and the engagement surface 102 of the port plate 100. There is also an eccentric drive bore 170 that engages with the drive shaft to rotate the rotor shoe 150. The symmetrical face design of the valve port plate 100 and rotor shoe 150 help to avoid tipping of the rotor shoe 150 caused by uneven pressure distribution in the valve assembly 61.

Although not shown, conventional equipment may be used to monitor and automatically regulate the flow of product fluid from the system 60 so that it can be fully automated to run continuously in an efficient manner.

The rotary valve assembly 61 will now be described in use to bring about the four process steps of the cycle. It should be noted that the rotary shoe 150 turns in one direction in order to bring about the process steps at a particular adsorbent bed 64 in the correct order. In the embodiment shown, the rotor shoe 150 rotates clockwise as shown by the arrow in FIG. 6A (when viewing the engagement surface 152 of the rotor shoe 150). Of course, the relative position of the ports 162 and 164 could be interchanged to allow counter-clockwise rotation if that was desirable. The rotary valve shoe 150 may turn in a continuous way or in a step way. Preferably, the rotary valve shoe 150 rotates continuously, at a constant rate. If the valve shoe 150 is controlled to move in a stepped fashion, stepped movement may be controlled by a controller based on one or more sensed pressure readings near or at the feed end and/or product end 67 of the adsorbent beds 64.

In alternative embodiments, the port plate 100 may rotate instead of the shoe 150 or both the shoe 150 and the port plate 100 may rotate (e.g., the shoe 150 may rotate at a faster rate than the port plate 100).

Further, although the rotary valve assembly 61 is preferably a face-seal type rotary valve assembly as described, in an alternative embodiment, the rotary valve assembly may be a cylindrical-type rotary valve assembly. In a cylindrical-type rotary valve assembly, an outer peripheral surface of a first valve member communicates with an inner peripheral surface of a second valve member to control the distribution of fluids.

Still farther, the rotary valve assembly 61 may be a face-seal type rotary valve assembly where some of the fluid routing does not occur in the engagement surface of the rotary valve shoe 150. For example, some fluid routing may occur along a periphery, outer circumference, or sidewall of the rotary valve shoe 150 underneath a ring that is shrunk or bonded onto the sidewall of the rotary valve shoe 150.

Process step 1 is carried out when the feed air channels 156(*a*) or (*b*) are positioned over an adsorbent bed port 106 in the port plate 100. Feed air channels 156(*a*),(*b*) are supplied with feed air via the feed air channel connecting passages 166(*a*),(*b*). The reverse side of the rotor shoe (FIG. 6B) is filled with feed air supplied via the central feed air passage 154 from the feed air port 110 in the port plate 100.

Process step 2 is carried out when the vent-down channels 164(*a*) or (*b*) are positioned over an adsorbent bed port 106 in the port plate 100. Fluid from the adsorbent bed 64 is then able to vent into the space 79 surrounding the rotary valve assembly 61 and out of the system 60 through a filter.

Process step 3 is carried out when vacuum channels 158(*a*) or (*b*) are positioned over an adsorbent bed port 106 in the port plate 100. Vacuum is supplied to the vacuum channels 158(*a*) and (*b*) via the vacuum connection channel 160. The vacuum connection channel 160 is in alignment with the vacuum ports 108 in the port plate 100.

Process step 4 is carried out when the vent-up channels 162(*a*) or (*b*) are positioned over an adsorbent bed port 106 in the port plate 100. The vent-up channel 162(*a*), (*b*) aligns with both the adsorbent bed port 106 and the vent-up port 104 in the port plate 100, allowing fluid communication between the two ports 104, 106.

The ratio of the duration of steps 1 and 3 to steps 2 and 4 is preferably about 3:1. This low-pressure ratio along with the vent-up feature described herein reduces the power consumption of the VPSA system and, thus, enables its use as part of a portable oxygen concentrator system. Although the preferred ratio of the duration of steps 1 and 3 to steps 2 and 4 is about 3:1, the ratio may vary from about 1:1 to 10:1, and more preferably, about 1.5:1 to 5:1. The ratio of the duration of step 1 to step 3 is preferably about 1:1. However, the ratio of step 1 to step 3 may vary from about 1:2 to 2:1.

The VPSA method of the present invention modifies prior-art vacuum-pressure swing adsorption cycles. Instead of the prior-art back-filling step that puts purified product gas into the adsorbent bed either co-currently or counter-currently, the VPSA method of the present invention includes a vent-up step (process step #4, FIG. 2). Prior art valve arrangements were more complex because active valves were used at the product ends of the adsorbent beds to allow for the back-filling step. The complexity of the prior art valve arrangements is avoided with the present invention. There are no active valves at the product end of the adsorbent beds. Elimination of valves that connect the product end of the adsorbent beds with the feed end of the adsorbent beds ensures that there cannot be any leaks from the feed gas into the product gas. This in turn ensures that product purity will not be adversely affected by this leakage. The present invention also avoids using a large quantity of product gas to back-fill.

The vent-up step reduces the power consumed because a portion of the fluid flows normally passing through the compressor is by-passed around the compressor, reducing the amount of fluid that must be handled through the compressor. This provides at least three advantages. The first advantage is that power input to the compressor is less since less fluid is handled. The second advantage is that the compressor can be smaller since its required capacity is lower for the same product output. The third advantage is that overall energy efficiency of the system is improved.

It should be noted that the vent-down step operates in a similar way, lowering power input to the vacuum pump, allowing the vacuum pump to be of a smaller size and increasing overall system efficiency yet further.

The VPSA system 60 including the rotary valve assembly 61 further advances the invention. The rotary distribution valve greatly simplifies the routing of fluid flows while packing the fluid distribution function into a very small space. The rotary valve assembly 61 uses very little power and has very high reliability.

These advantages, in turn, make it feasible to produce fluid fractionators small enough that they can be used for, before unheard of, purposes such as for portable oxygen gas production.

Although some of the elements described herein are referred to by order, i.e., "first," "second," etc., it should be noted that this is done to facilitate the reader's understanding of the invention and is not intended to limit the invention.

The foregoing description and drawings were given for illustrative purposes only, it being understood that the invention is not limited to the embodiments disclosed, but is intended to embrace any and all alternatives, equivalents, modifications and rearrangements of elements or steps falling within the scope of the invention as defined by the following claims.

I claim:

1. A vacuum-pressure swing adsorption process for the separation of components of a fluid mixture, comprising:

(a) transferring a fluid mixture through an adsorbent bed at an elevated pressure P_h so as to produce a purified product fluid;

(b) venting the adsorbent bed down to an ambient fluid pressure P_a;

(c) applying a vacuum force to the adsorbent bed to bring the adsorbent bed to a reduced pressure P_l;

(d) venting the adsorbent bed up to the ambient fluid pressure P_a.

2. The method of claim **1**, wherein step (b) includes venting the adsorbent bed to ambient fluid pressure P_a after step (a) is complete and simultaneously purging the adsorbent bed with a fraction of the product fluid produced.

3. The method of claim **2**, wherein step (c) includes evacuating the adsorbent bed with a vacuum pump at the reduced pressure P_l after step (b) is complete and simultaneously purging the adsorbent bed with a fraction of the product fluid produced.

4. The method of claim **3**, wherein step (d) includes venting the adsorbent bed up to an ambient fluid pressure P_a after step (c) is complete and simultaneously filling the adsorbent bed with a fraction of the product fluid produced.

5. The method of claim **1**, wherein the process is performed with a discrete-valve VPSA system.

6. The method of any of claim **5**, wherein the discrete-valve VPSA system includes a discrete valve assembly controlled based on sensed pressure at or near the adsorbent bed.

7. The method of claim **1**, wherein the process is performed with a rotary valve VPSA system.

8. The method of claim **1**, wherein the process is performed with a face-seal type, rotary valve VPSA system.

9. The method of claim **8**, wherein the rotary valve VPSA system includes a rotary valve that, when in use, rotates continuously at a constant rate.

10. The method of claim **8**, wherein the rotary valve VPSA system includes a rotary valve that is controlled to operated in stepped fashion based on sensed pressure at or near an adsorbent bed.

11. The method of claim **1**, wherein the vacuum-pressure swing adsorption process separates oxygen gas from air.

12. The method of claim **11**, wherein the ratio of the duration of steps (a) and (c) to steps (b) and (d) is about 3:1.

13. The method of claim **11**, wherein the ratio of the duration of steps (a) and (c) to steps (b) and (d) ranges from about 1.5:1 to 5:1.

14. The method of claim **1**, wherein the process is performed with a portable oxygen concentrator.

15. The method of claim **14**, wherein the ratio of the duration of steps (a) and (c) to steps (b) and (d) is about 3:1.

16. The method of claim **14**, wherein the ratio of the duration of steps (a) and (c) to steps (b) and (d) ranges from about 1.5:1 to 5:1.

17. The method of claim **1**, wherein the process is performed with a battery-powered concentrator.

18. The method of claim **17**, wherein the ratio of the duration of steps (a) and (c) to steps (b) and (d) is about 3:1.

19. The method of claim **17**, wherein the ratio of the duration of steps (a) and (c) to steps (b) and (d) ranges from about 1.5:1 to 5:1.

20. The method of claim **1**, wherein the ratio of the duration of step (a) to step (c) is about 1:1.

21. The method of claim **1**, wherein the ratio of the duration of step (a) to step (c) ranges from about 1:2 to 2:1.

22. The method of claim **1**, wherein the ratio of the duration of steps (a) and (c) to steps (b) and (d) is about 3:1.

23. The method of claim **1**, wherein the ratio of the duration of steps (a) and (c) to steps (b) and (d) ranges from about 1:1 to 10:1.

24. The method of claim **1**, wherein at least two of the durations of steps (a)–(d) are unequal.

25. The method of claim **1**, wherein at least three of the durations of steps (a)–(d) are unequal.

26. The method of claim **1**, wherein all of the durations of steps (a)–(d) are unequal.

27. The method of claim **1**, wherein the venting up step of step (d) includes filtering incoming ambient fluid.

28. The method of claim **1**, wherein the ambient fluid pressure P_a is atmospheric pressure.

29. The method of claim **1**, wherein compressed air supplied for the transferring step of step (a) and vacuum pressure for the vacuuming step of step (c) are created by an integrated vacuum pump and compressor operating from a single motor.

30. A vacuum-pressure swing adsorption system for the separation of components of a fluid mixture, comprising:

a plurality of adsorbent beds; and

a valve assembly to provide valving action to transfer a fluid mixture through each adsorbent bed at an elevated pressure P_h so as to produce a purified product fluid, vent the adsorbent bed down to an ambient fluid pressure P_a, cause a vacuum force to be applied to the adsorbent bed to bring the adsorbent bed to a reduced pressure P_l and vent the adsorbent bed up to the ambient fluid pressure P_a.

31. The system of claim **30**, wherein the valve assembly provides valving action to allow the adsorbent bed to vent to ambient fluid pressure P_a and to allow the adsorbent bed to be purged with a fraction of product fluid produced.

32. The system of claim **31**, wherein the valve assembly provides valving action to allow the adsorbent bed to be evacuated with a vacuum pump at the reduced pressure P_l and to allow the adsorbent bed to be purged with a fraction of product fluid produced.

33. The system of claim **32**, wherein the valve assembly provides valving action to allow the adsorbent bed to vent up to an ambient fluid pressure P_a and to allow the adsorbent bed to be filled with a fraction of product fluid produced.

34. The system of claim **30**, wherein the system is a discrete-valve VPSA system.

35. The system of claim **34**, wherein the valve assembly includes six two-way valves.

36. The system of claim **34**, wherein the valve assembly includes two three-position, four-way, spring centered valves.

37. The system of claim **34**, wherein the valve assembly of the discrete-valve VPSA system is a discrete valve assembly and the VPSA system further includes a controller adapted to control the discrete valve assembly based on sensed pressure at or near the adsorbent beds.

38. The system of claim **30**, wherein the system is a rotary valve VPSA system.

39. The system of claim **38**, wherein the system is a face-seal type, rotary valve VPSA system including a rotor shoe with an engagement surface and a port plate with an engagement surface, the engagement surface of the rotor shoe in rotational engagement with the engagement surface of the port plate for providing valving action.

40. The system of claim **39**, wherein the rotary valve rotates continuously at a constant rate.

41. The system of claim **39**, wherein the rotary valve VPSA system further includes a controller that controls the rotary valve to operate in stepped fashion based on sensed pressure at or near the adsorbent beds.

42. The system of claim **30**, wherein the ratio of the absolute pressure of the elevated pressure P_h and the reduced pressure P_l to the ambient fluid pressure P_a is about 3:1.

43. The system of claim **30** wherein the ratio of the absolute pressure of the elevated pressure P_h and the reduced pressure P_l to the ambient fluid pressure P_a ranges from about 1.5:1 to 5:1.

44. The system of claim **30**, wherein the vacuum-pressure swing adsorption system separates oxygen gas from air.

45. The system of claim **44**, wherein the ratio of the absolute pressure of the elevated pressure P_h and the reduced pressure P_l to the ambient fluid pressure P_a is about 3:1.

46. The system of claim **44**, wherein the ratio of the absolute pressure of the elevated pressure P_h and the reduced pressure P_l to the ambient fluid pressure P_a ranges from about 1.5:1 to 5:1.

47. The system of claim **30**, wherein the vacuum-pressure swing adsorption system is a portable oxygen concentrator.

48. The system of claim **47**, wherein the ratio of the absolute pressure of the elevated pressure P_h and the reduced pressure P_l to the ambient fluid pressure P_a is about 3:1.

49. The system of claim **47**, wherein the ratio of the absolute pressure of the elevated pressure P_h and the reduced pressure P_l to the ambient fluid pressure P_a ranges from about 1.5:1 to 5:1.

50. The system of claim **30**, wherein the system is battery-powered.

51. The system of claim **50**, wherein the ratio of the absolute pressure of the elevated pressure P_h and the reduced pressure P_l to the ambient fluid pressure P_a is about 3:1.

52. The system of claim **50**, wherein the ratio of the absolute pressure of the elevated pressure P_h and the reduced pressure P_l to the ambient fluid pressure P_a ranges from about 1.5:1 to 5:1.

53. The system of claim **30**, further including a filter to filter incoming vent-up ambient fluid.

54. The system of claim **30**, further including an integrated vacuum pump and compressor operating from a single motor to supply compressed air to the system and to cause vacuum pressure in the system.

55. The system of claim **30**, wherein the adsorbent bed includes Li-X sieve material.

56. The system of claim **30**, wherein the adsorbent bed includes Ca-X sieve material.

57. The system of claim **30**, wherein the adsorbent bed is a layered sieve bed.

58. The system of claim **30**, wherein the adsorbent bed includes a product end and a feed end, the valve assembly adapted to control flow through the product end, feed end, or both.

59. The system of claim **30**, wherein the adsorbent bed includes a product end and a feed end, the valve assembly located at least in part near the product end, the feed end, or both.

* * * * *