US007135059B2

(12) **United States Patent**
Deane et al.

(10) **Patent No.: US 7,135,059 B2**
(45) **Date of Patent: Nov. 14, 2006**

(54) **PORTABLE GAS FRACTIONALIZATION SYSTEM**

(75) Inventors: **Geoffrey Frank Deane**, Goleta, CA (US); **Brenton Alan Taylor**, Santa Barbara, CA (US); **Rex O. Bare**, Lake Forest, CA (US); **Bradley J. Sargent**, Mission Viejo, CA (US); **Andrew J. Scherer**, Trabuco Canyon, CA (US)

(73) Assignee: **Inogen, Inc.**, Goleta, CA (US)

(*) Notice: Subject to any disclaimer, the term of this patent is extended or adjusted under 35 U.S.C. 154(b) by 35 days.

(21) Appl. No.: **10/681,456**

(22) Filed: **Oct. 7, 2003**

(65) **Prior Publication Data**

US 2005/0072306 A1 Apr. 7, 2005

(51) **Int. Cl.**
B01D 53/02 (2006.01)

(52) **U.S. Cl.** **96/115**; 96/128; 96/135; 96/142; 96/153; 55/356

(58) **Field of Classification Search** 96/108, 96/115, 117, 126–128, 130–135, 137, 147, 96/142–144, 149, 153, 154; 55/356, 357, 55/516–518, 523; 128/201.25, 202.26, 204.17, 128/204.22, 205.11, 205.12, 205.18, 201.26
See application file for complete search history.

(56) **References Cited**

U.S. PATENT DOCUMENTS

2,195,565 A * 4/1940 Fricke 96/132
2,728,407 A * 12/1955 Squier 98/137
2,798,718 A * 7/1957 Gross 267/161
2,944,627 A 7/1960 Skarstrom
3,258,899 A * 7/1966 Coffin 96/114
3,323,292 A * 6/1967 Brown 96/110
3,406,501 A * 10/1968 Watkins 96/135
3,703,068 A 11/1972 Wagner
3,730,158 A * 5/1973 St. Amand 123/519
3,880,616 A 4/1975 Meyers et al.
3,922,149 A 11/1975 Ruder et al.
3,976,050 A * 8/1976 Glasser et al. 600/431
4,054,133 A 10/1977 Myers
4,070,164 A 1/1978 Miwa et al.
4,077,779 A 3/1978 Sircar et al.
4,146,277 A * 3/1979 Santoro 96/117.5
4,222,750 A 9/1980 Gauthier et al.
4,247,311 A 1/1981 Seibert et al.

(Continued)

FOREIGN PATENT DOCUMENTS

EP 0 848 981 A1 6/1998

(Continued)

Primary Examiner—Robert A. Hopkins
(74) *Attorney, Agent, or Firm*—Knobbe Martens Olson & Bear, LLP

(57) **ABSTRACT**

A portable gas fractionalization apparatus that provides oxygen rich air to patients is provided. The apparatus is compact, lightweight, and low-noise. The components are assembled in a housing that is divided into two compartments. One compartment is maintained at a lower temperature than the other compartment. The lower temperature compartment is configured for mounting components that can be damaged by heat. The higher temperature compartment is configured for mounting heat generating components. An air stream is directed to flow from an ambient air inlet to an air outlet constantly so that there is always a fresh source of cooling air. The apparatus utilizes a PSA unit to produce an oxygen enriched product. The PSA unit incorporates a novel single ended column design in which all flow paths and valves can be co-located on a single integrated manifold. The apparatus also can be used in conjunction with a satellite conserver and a mobility cart.

15 Claims, 21 Drawing Sheets

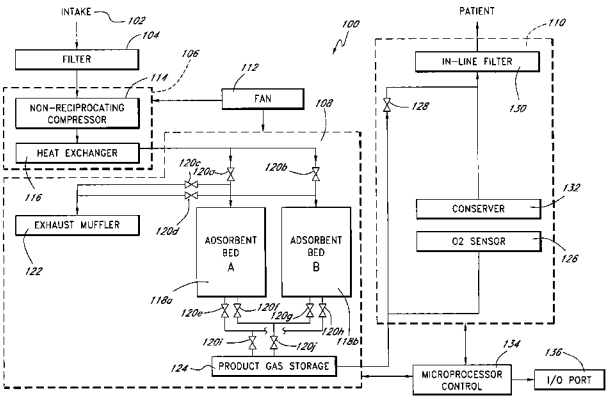

U.S. PATENT DOCUMENTS

4,302,224 A * 11/1981 McCombs et al. 96/109
4,303,419 A * 12/1981 Frank et al. 96/189
4,342,573 A * 8/1982 McCombs et al. 96/109
4,371,384 A 2/1983 McCombs
4,373,938 A * 2/1983 McCombs 96/114
4,378,982 A 4/1983 McCombs
4,381,002 A 4/1983 Mon
4,428,372 A 1/1984 Beysel et al.
4,449,990 A 5/1984 Tedford, Jr.
4,462,398 A 7/1984 Durkan et al.
4,482,361 A 11/1984 Whysall
4,491,459 A 1/1985 Pinkerton
4,496,376 A * 1/1985 Hradek 96/112
4,502,873 A 3/1985 Mottram et al.
4,509,959 A * 4/1985 McCombs 96/115
4,511,377 A 4/1985 McCombs
4,516,424 A 5/1985 Rowland
4,534,346 A 8/1985 Schlaechter
4,584,996 A 4/1986 Blum
4,681,099 A 7/1987 Sato et al.
4,686,974 A 8/1987 Sato et al.
4,698,075 A 10/1987 Dechene
4,706,664 A 11/1987 Snook et al.
4,744,803 A 5/1988 Knaebel
4,770,678 A * 9/1988 Haslett, Jr. 96/117
4,783,205 A 11/1988 Searle
4,802,899 A 2/1989 Vrana et al.
4,826,510 A * 5/1989 McCombs 96/127
4,877,429 A * 10/1989 Hunter 95/95
4,892,566 A 1/1990 Bansal et al.
4,895,808 A * 1/1990 Romer 436/178
4,925,464 A 5/1990 Rabenau et al.
4,971,609 A 11/1990 Pawlos
5,002,591 A 3/1991 Stanford
5,004,485 A 4/1991 Hamlin et al.
5,005,570 A 4/1991 Perkins
5,032,150 A 7/1991 Knaebel
5,071,453 A 12/1991 Hradek et al.
5,112,367 A 5/1992 Hill
5,114,441 A 5/1992 Kanner et al.
5,144,945 A * 9/1992 Nishino et al. 128/205.12
5,154,737 A 10/1992 Jenkins et al.
5,226,933 A 7/1993 Knaebel et al.
5,268,021 A 12/1993 Hill et al.
5,275,642 A * 1/1994 Bassine 96/149
5,366,541 A 11/1994 Hill et al.
5,427,609 A * 6/1995 Zoglman et al. 95/98
5,466,134 A 11/1995 Shaffer et al.
5,474,595 A 12/1995 McCombs
5,495,848 A 3/1996 Aylsworth et al.
5,496,388 A 3/1996 Tellier
5,531,807 A 7/1996 McCombs
5,549,736 A * 8/1996 Coffield et al. 96/133
5,558,086 A 9/1996 Smith et al.
5,578,115 A * 11/1996 Cole 96/121
5,593,478 A 1/1997 Hill et al.
5,603,315 A 2/1997 Sasso, Jr.
5,611,845 A 3/1997 Delp, II
5,626,131 A 5/1997 Chua et al.
5,630,411 A 5/1997 Holscher
5,632,612 A 5/1997 Shaffer
5,658,371 A 8/1997 Smolarek et al.
5,665,316 A 9/1997 Salonia et al.
5,697,364 A 12/1997 Chua et al.
5,730,778 A 3/1998 Hill et al.
5,735,268 A 4/1998 Chua et al.
5,746,806 A 5/1998 Aylsworth et al.
5,752,816 A 5/1998 Shaffer
5,755,224 A 5/1998 Good et al.
5,759,020 A 6/1998 Shaffer
5,827,358 A * 10/1998 Kulish et al. 96/115
5,839,434 A 11/1998 Enterline
5,865,174 A 2/1999 Kloeppel
5,871,564 A 2/1999 McCombs
5,881,725 A 3/1999 Hoffman et al.
5,890,490 A 4/1999 Aylsworth et al.
5,906,672 A 5/1999 Michaels et al.
5,912,426 A 6/1999 Smolarek et al.
5,917,135 A 6/1999 Michaels et al.
5,928,189 A 7/1999 Phillips et al.
5,968,236 A 10/1999 Bassine
5,979,440 A 11/1999 Honkonen et al.
5,997,617 A * 12/1999 Czabala et al. 96/130
6,033,457 A 3/2000 Lawless
6,036,754 A * 3/2000 Rowe 96/130
6,050,792 A 4/2000 Shaffer
6,068,680 A 5/2000 Kulish et al.
6,077,331 A 6/2000 Phillips
6,129,530 A 10/2000 Shaffer
6,146,447 A 11/2000 Sircar et al.
6,152,134 A 11/2000 Webber et al.
6,176,897 B1 1/2001 Keefer
6,178,772 B1 * 1/2001 Incorvia 62/509
6,186,142 B1 2/2001 Schmidt et al.
6,190,441 B1 2/2001 Czabala et al.
6,192,884 B1 2/2001 Vann et al.
6,220,244 B1 4/2001 McLaughlin
6,269,811 B1 8/2001 Duff et al.
6,299,670 B1 * 10/2001 Applegarth 95/114
6,311,719 B1 11/2001 Hill et al.
6,342,090 B1 1/2002 Cao
6,346,139 B1 2/2002 Czabala
6,348,082 B1 2/2002 Murdoch et al.
6,371,114 B1 4/2002 Schmidt et al.
6,372,026 B1 4/2002 Takemasa et al.
6,395,065 B1 5/2002 Murdoch et al.
6,427,690 B1 8/2002 McCombs et al.
6,439,864 B1 8/2002 Shaffer
6,457,485 B1 10/2002 Hill et al.
6,478,850 B1 11/2002 Warren
6,497,755 B1 12/2002 Murdoch et al.
6,511,308 B1 1/2003 Shaffer
6,520,176 B1 2/2003 Dubois et al.
6,532,957 B1 3/2003 Berthon-Jones
6,532,958 B1 3/2003 Buan et al.
6,551,384 B1 4/2003 Ackley et al.
6,558,451 B1 5/2003 McCombs et al.
6,581,297 B1 * 6/2003 Ginder 34/79
6,629,525 B1 10/2003 Hill et al.
6,712,877 B1 3/2004 Cao et al.
6,712,886 B1 3/2004 Kim
6,764,534 B1 * 7/2004 McCombs et al. 96/111
6,805,122 B1 10/2004 Richey et al.
6,805,729 B1 * 10/2004 Lim et al. 95/135
6,811,590 B1 11/2004 Lee et al.
6,866,041 B1 3/2005 Hardy et al.
2002/0053286 A1 5/2002 Czabala
2002/0121191 A1 9/2002 Warren
2003/0024531 A1 2/2003 Ball
2003/0167924 A1 9/2003 McCombs et al.
2003/0192431 A1 10/2003 Lee et al.
2004/0020366 A1 * 2/2004 Walker et al. 96/133
2004/0074496 A1 4/2004 Hayashi et al.
2005/0072298 A1 4/2005 Deane
2005/0072423 A1 4/2005 Deane et al.
2005/0072426 A1 4/2005 Deane et al.

FOREIGN PATENT DOCUMENTS

EP 0 988 882 A3 3/2000
WO WO 01/41900 A2 6/2001

* cited by examiner

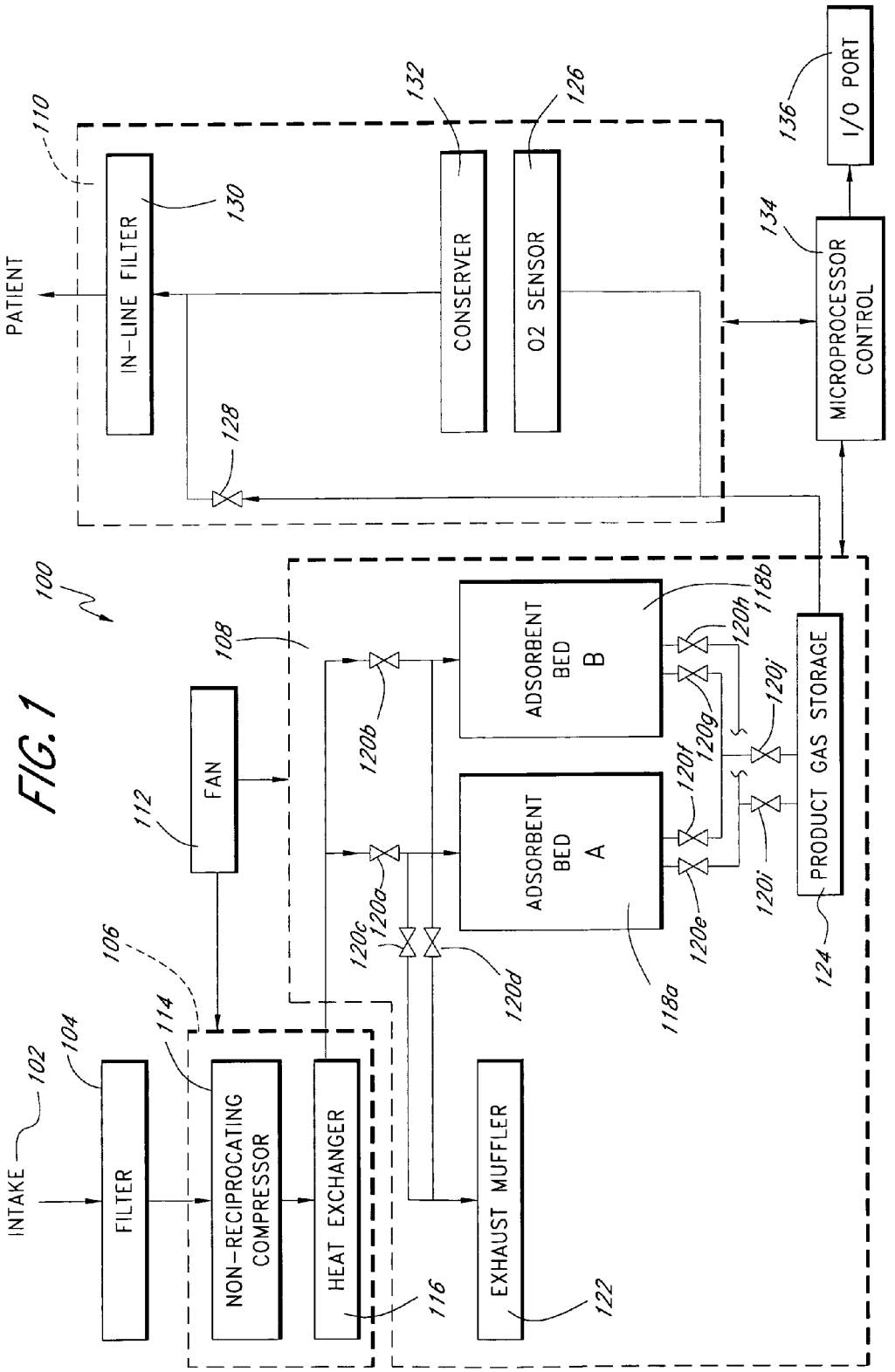
FIG. 1
100
INTAKE
102
FILTER
104
106
NON-RECIPROCATING COMPRESSOR
114
HEAT EXCHANGER
116
FAN
112
108
120a
120b
120c
120d
ADSORBENT BED A
118a
ADSORBENT BED B
118b
120e
120f
120g
120h
120i
120j
PRODUCT GAS STORAGE
124
EXHAUST MUFFLER
122
PATIENT
110
IN-LINE FILTER
130
128
CONSERVER
132
O2 SENSOR
126
MICROPROCESSOR CONTROL
134
I/O PORT
136

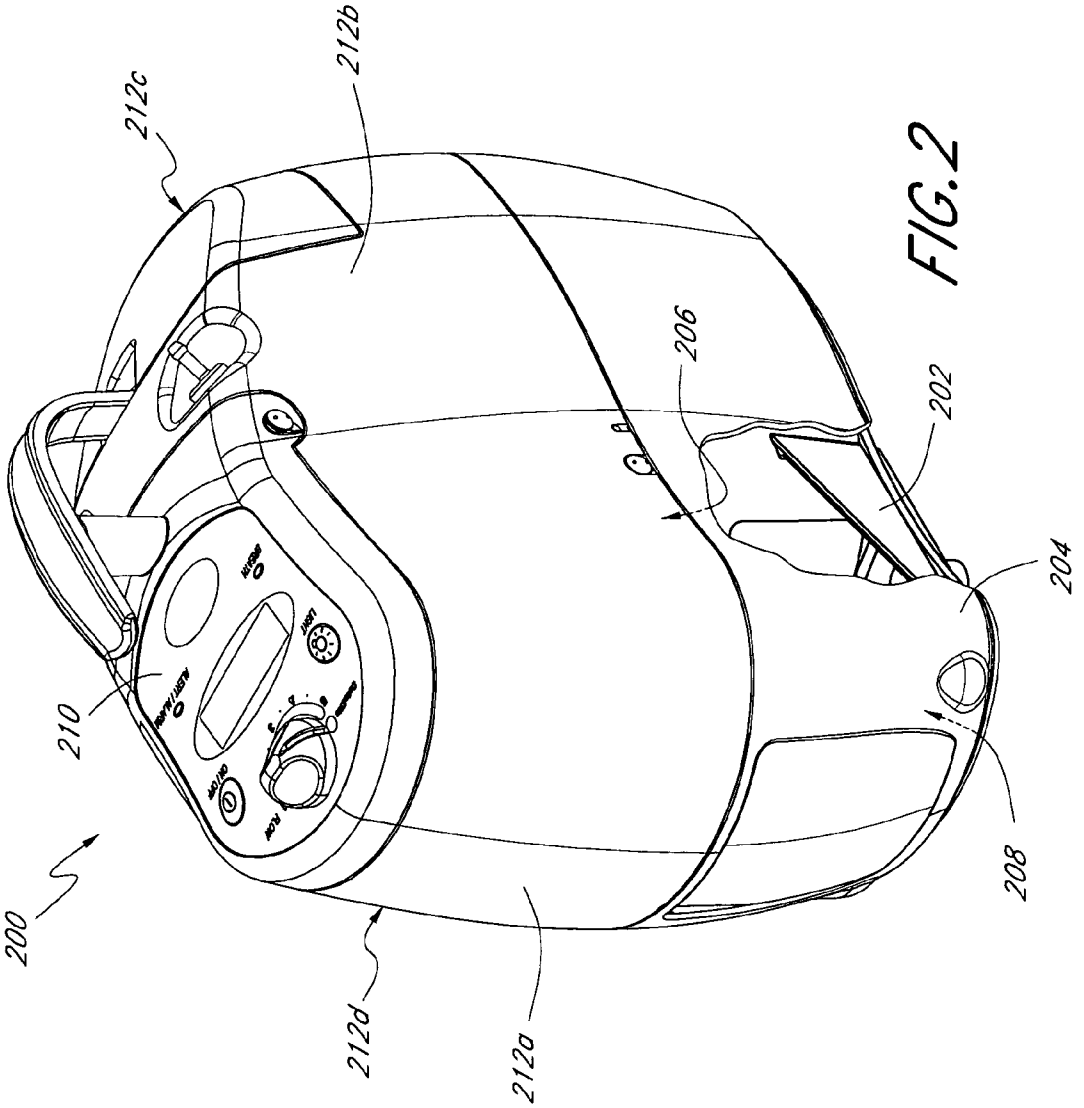

FIG. 2

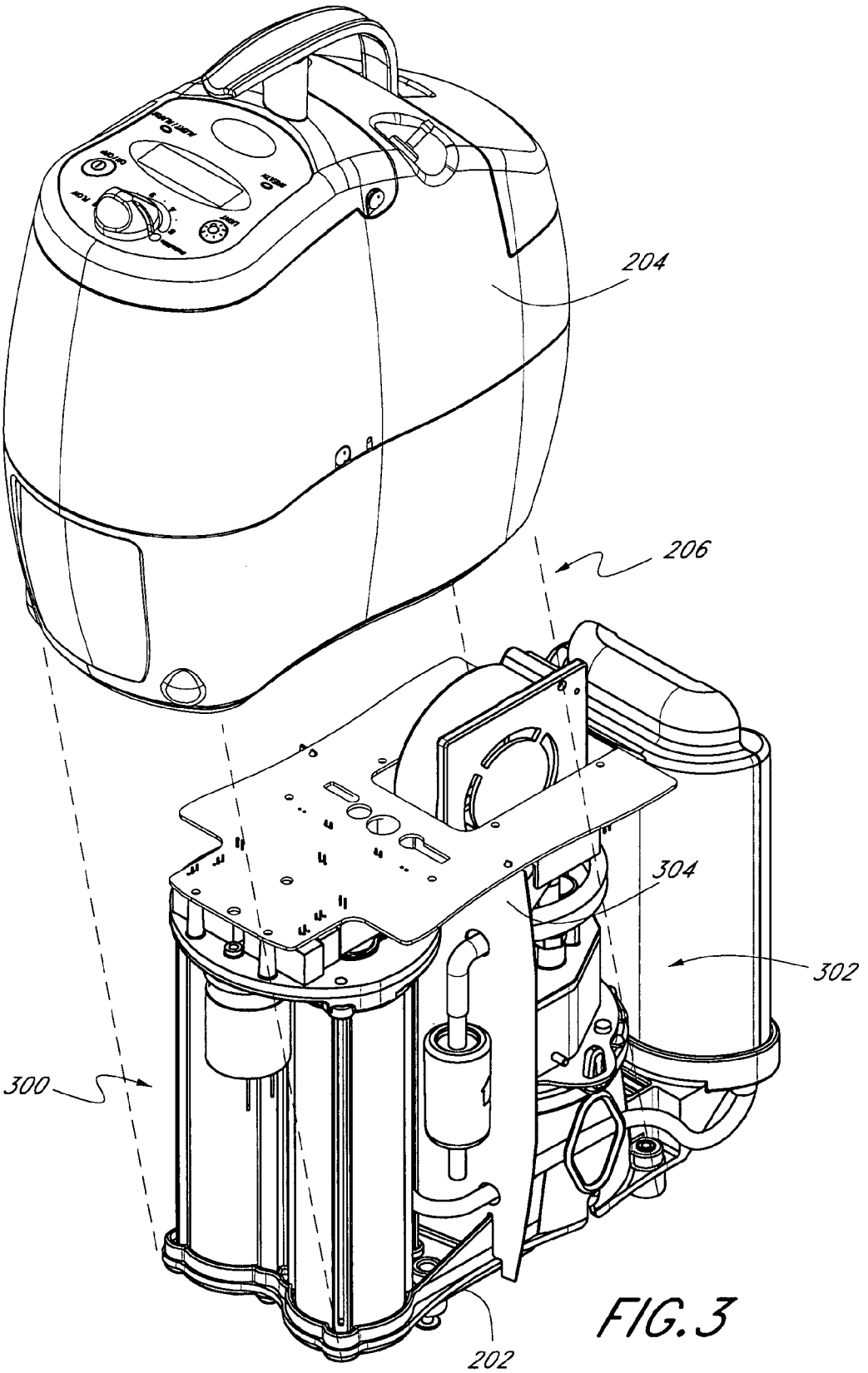

FIG. 3

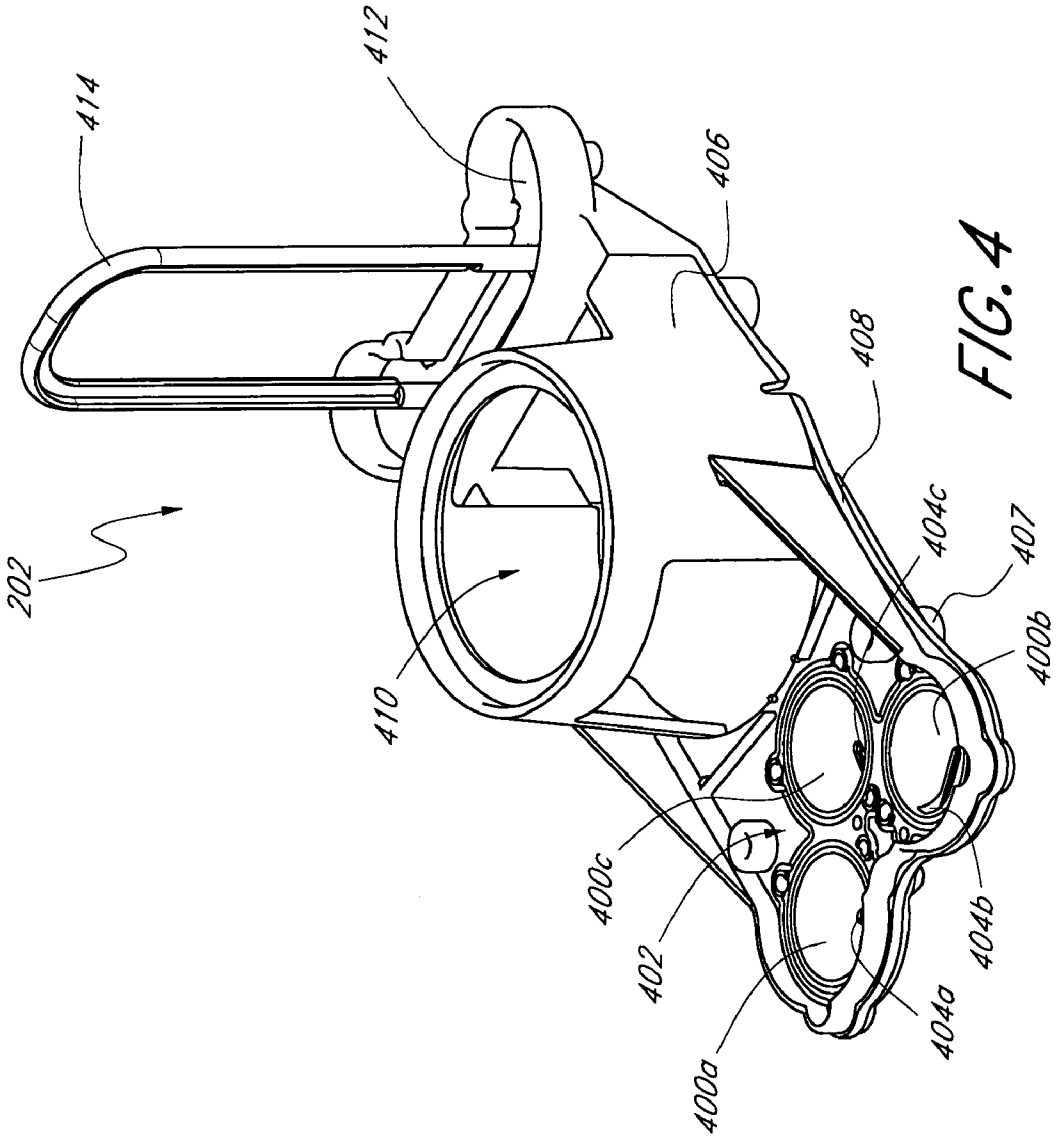

FIG. 4

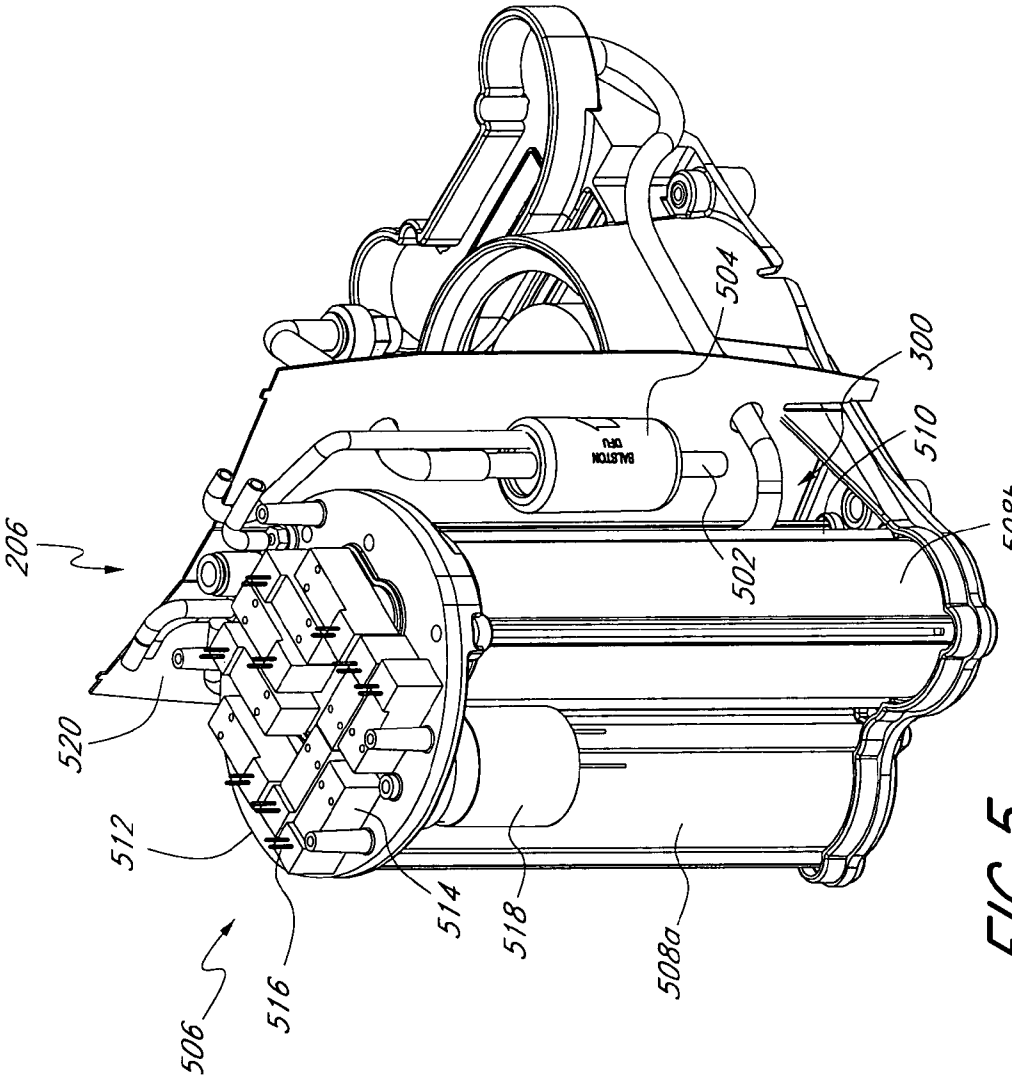
206
520
512
506
516
514
518
508a
502
504
BALSTON
DPU
510
300
508b

FIG. 5

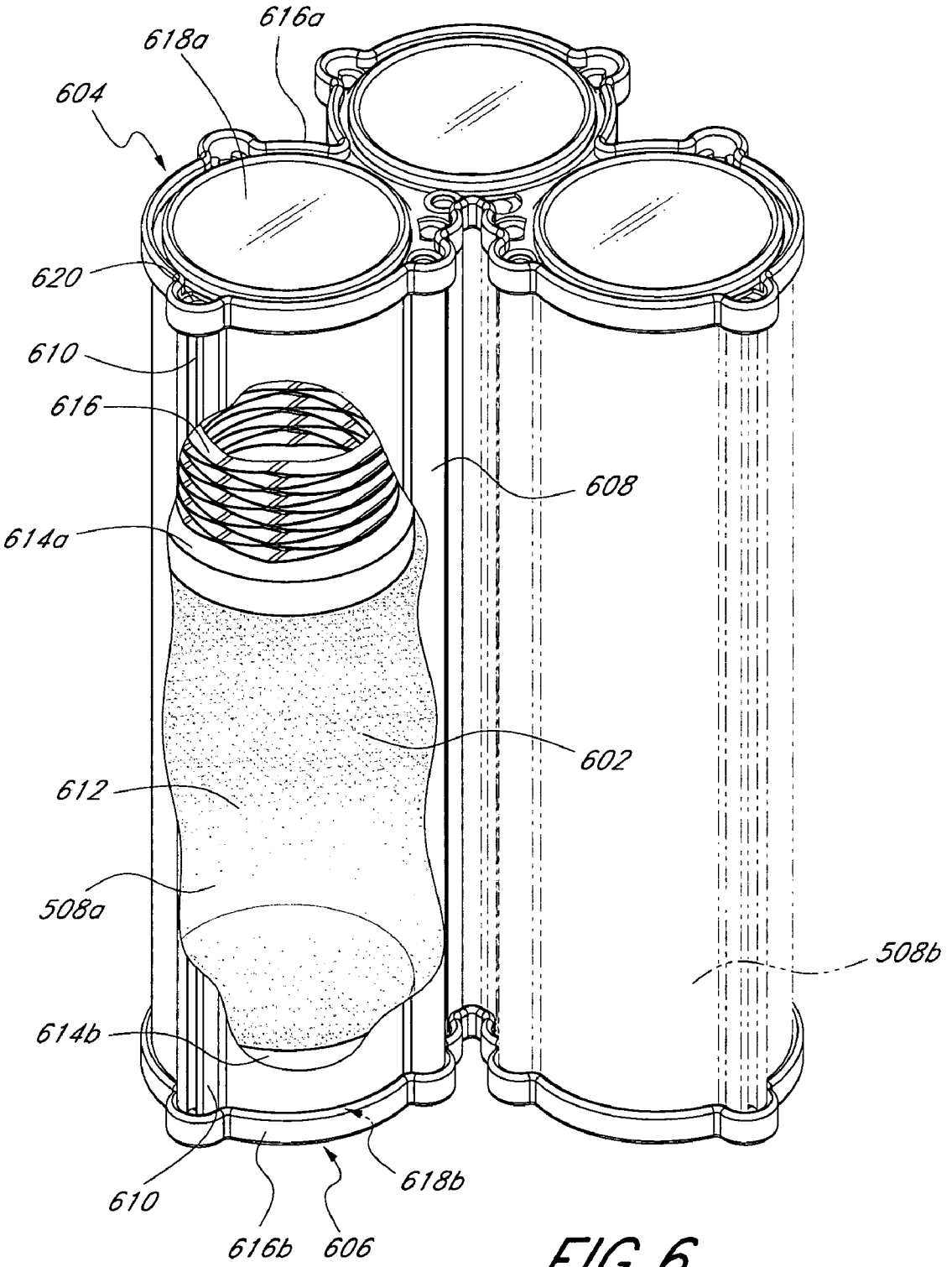
616a
618a
604
620
610
616
608
614a
602
612
508a
508b
614b
610
618b
616b
606

FIG. 6

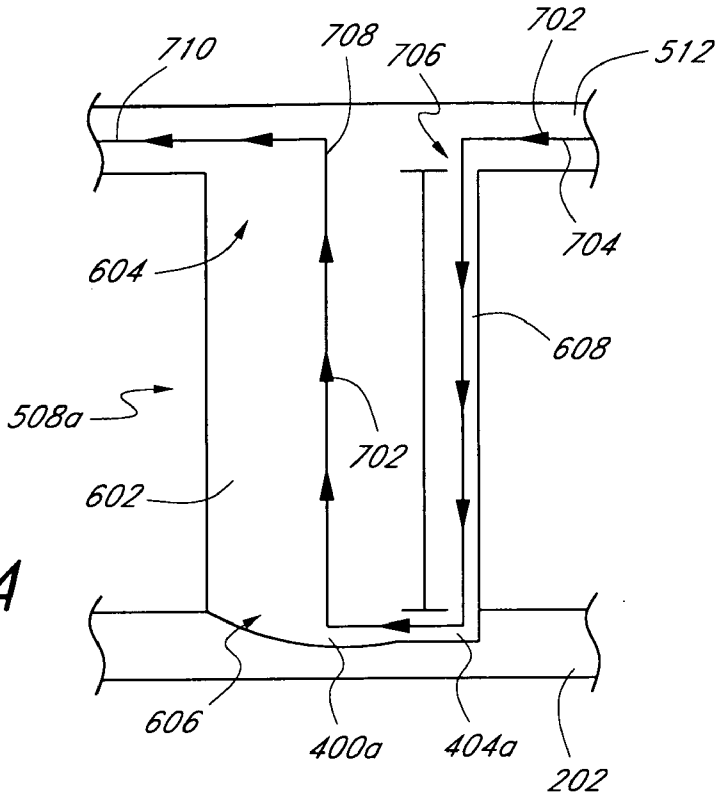
710
708
706
702
512
704
604
608
508a
702
602
606
400a
404a
202

FIG. 7A

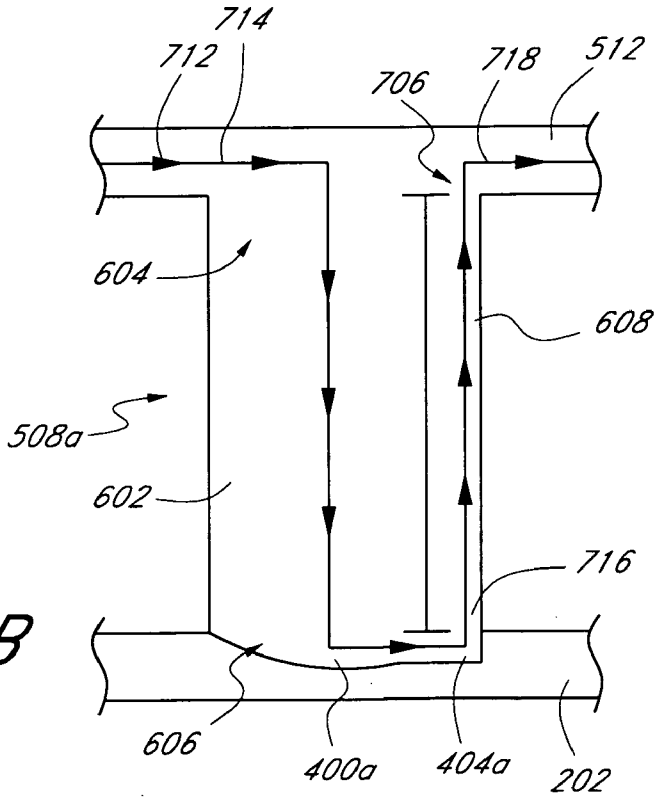
714
712
706
718
512
604
608
508a
602
716
606
400a
404a
202

FIG. 7B

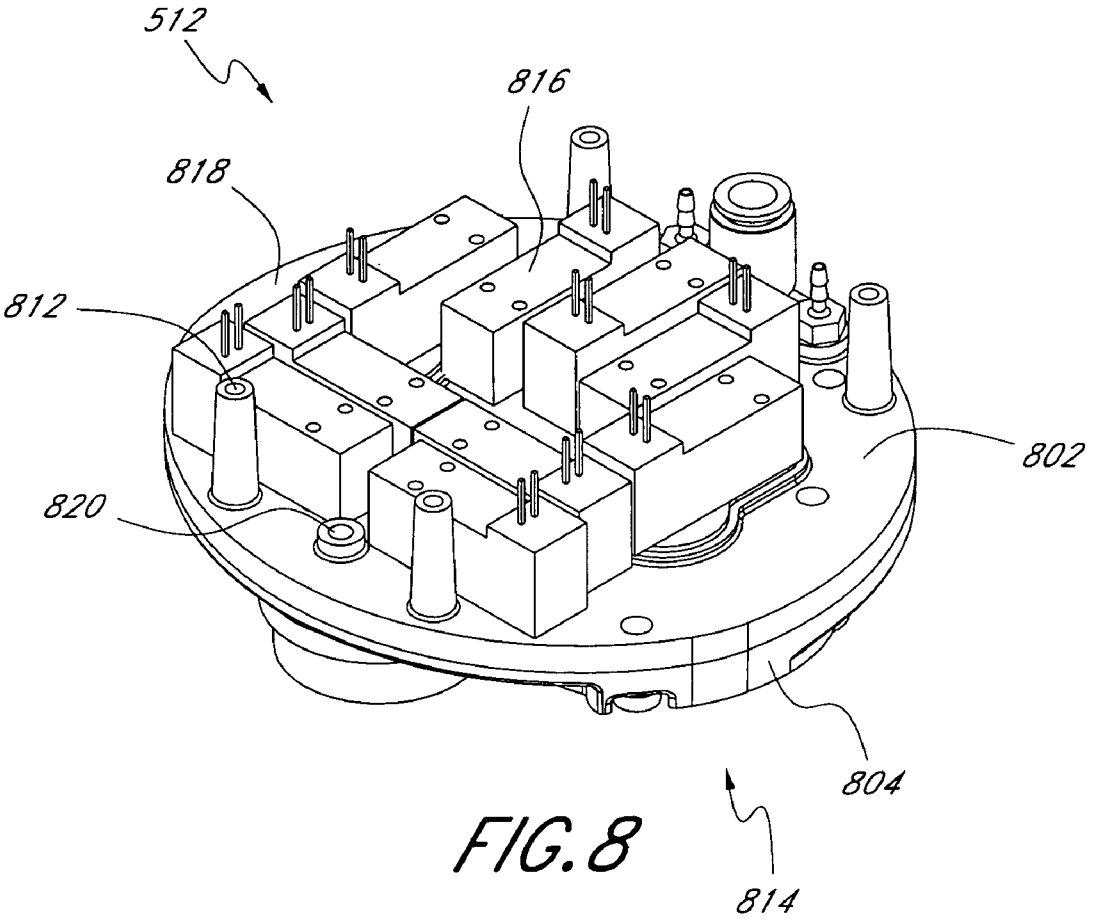

FIG. 8

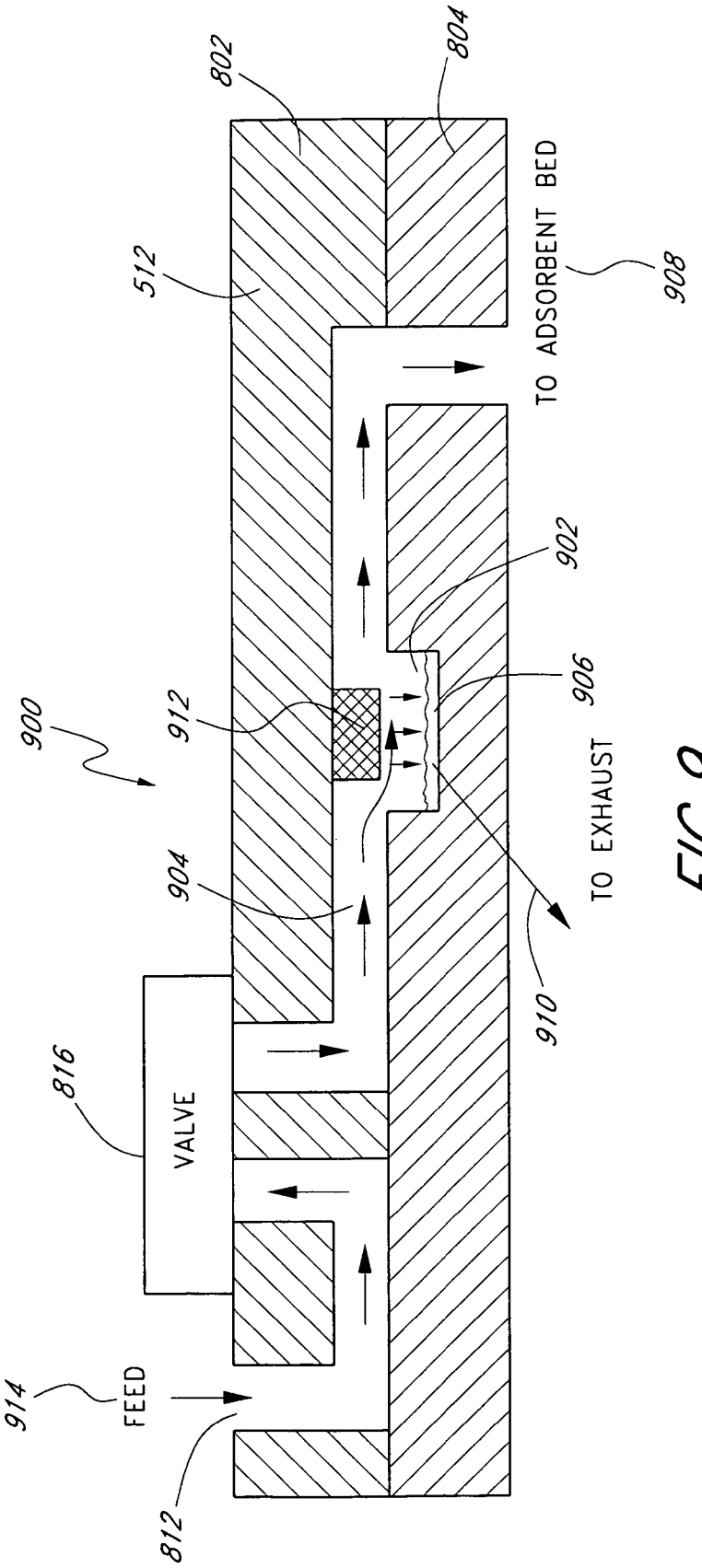
802
804
512
TO ADSORBENT BED
908
902
906
900
912
904
TO EXHAUST
910
816
VALVE
914
FEED
812

FIG. 9

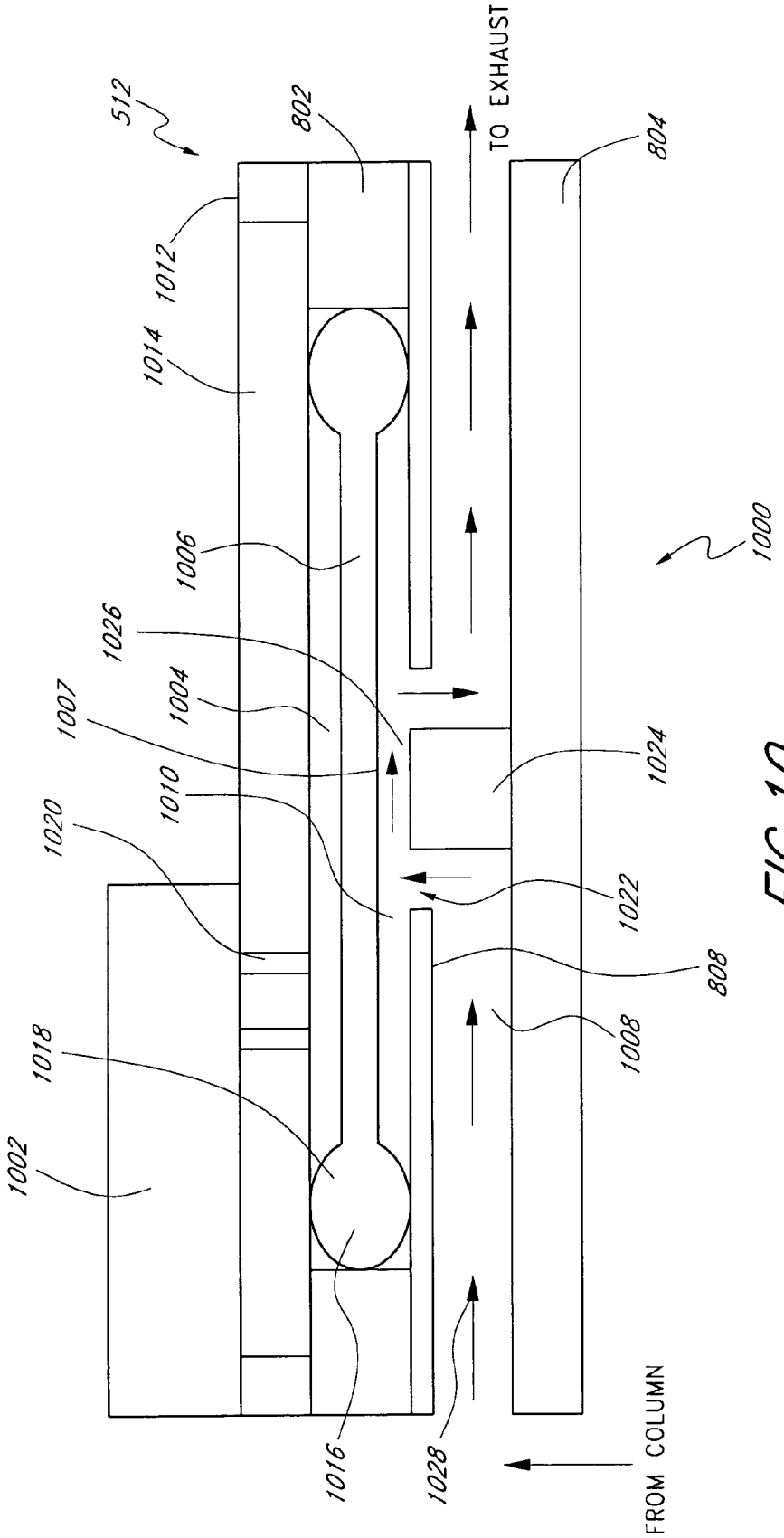
512
1012
1014
1006
1026
1004
1007
1010
1020
1018
1002
1016
1028
FROM COLUMN
1008
808
1022
1024
1000
804
TO EXHAUST
802

FIG. 10

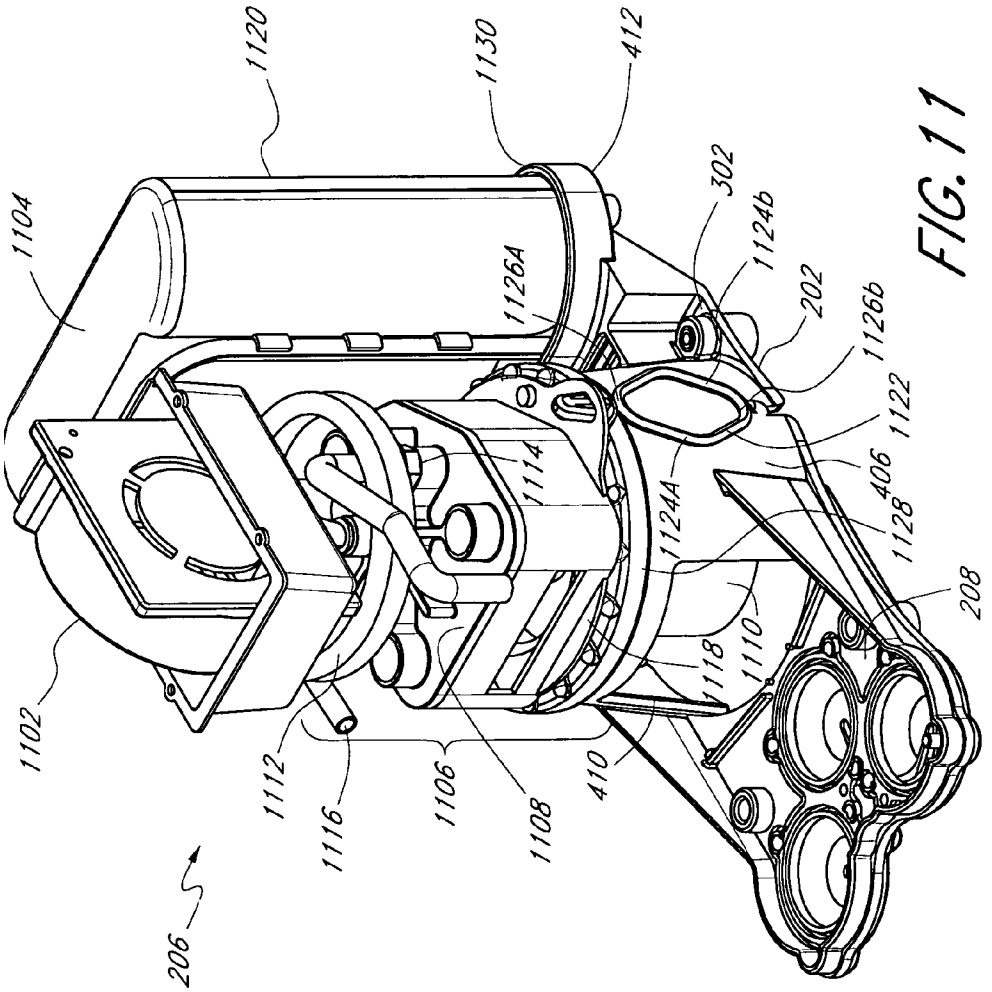
1120
1130
412
1104
302
1124b
1126A
202
1126b
1122
1114
406
1124A
1128
208
1110
1118
1102
1112
1116
1106
1108
410
206

FIG. 11

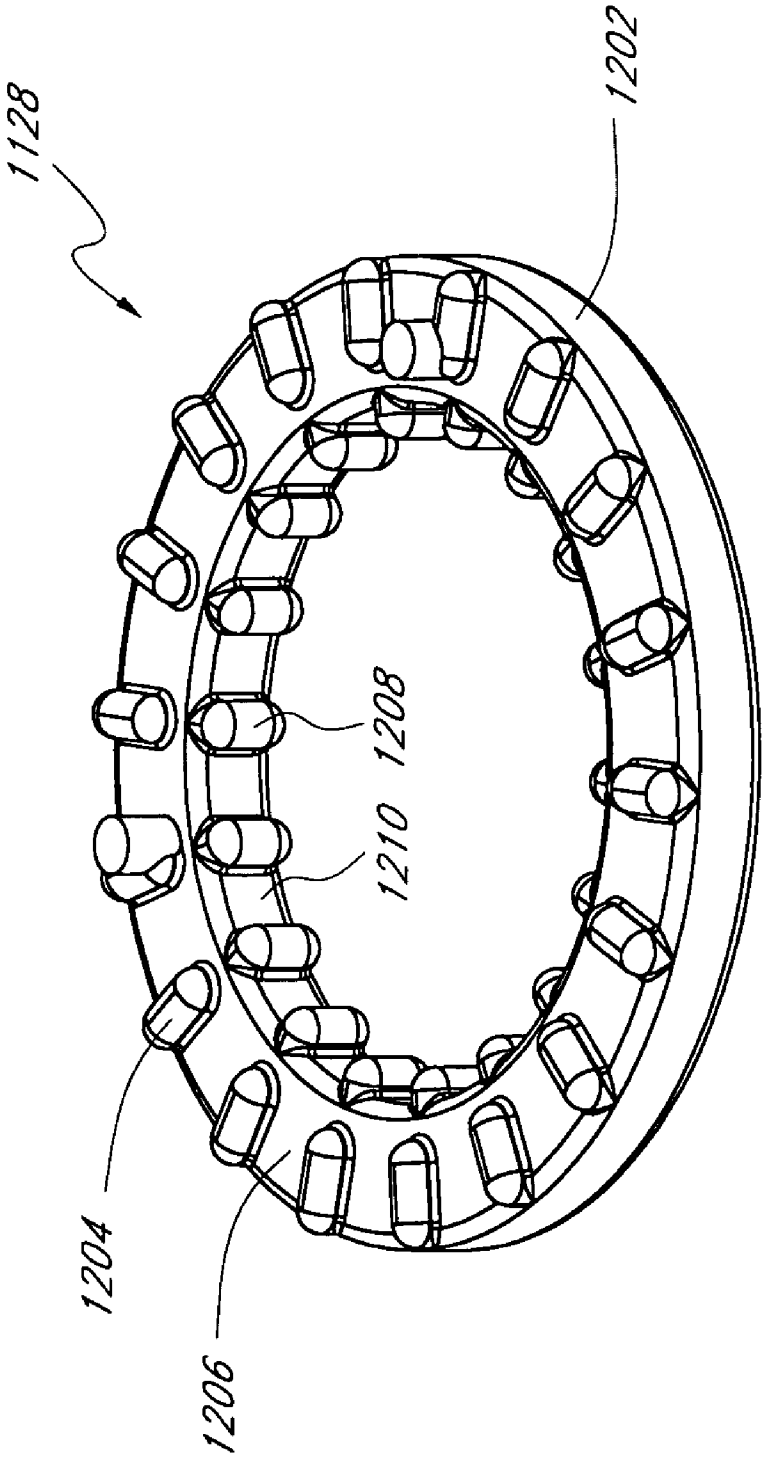

FIG. 12

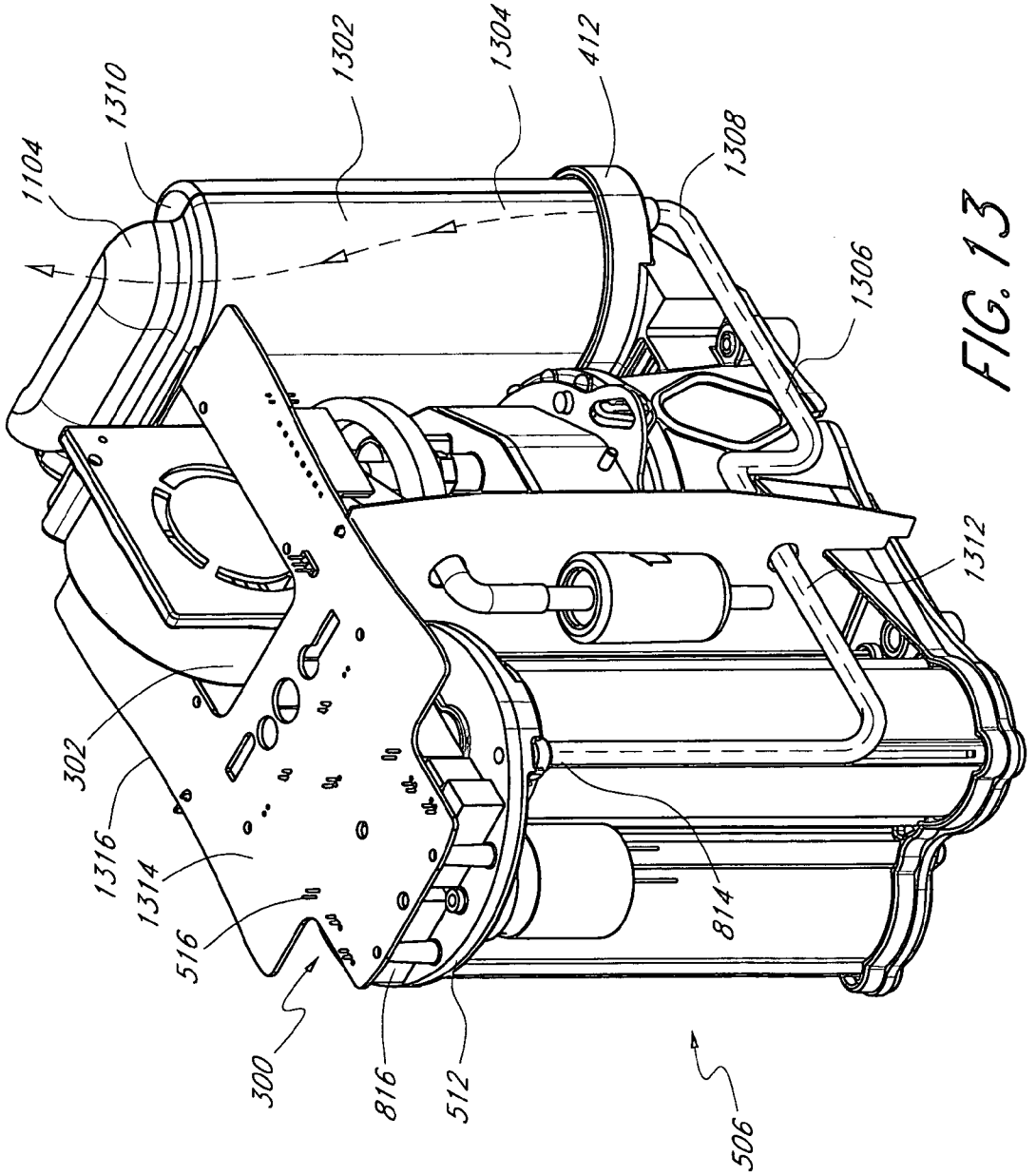
1104
1310
1302
1304
412
1308
1306
1312
302
1316
1314
516
300
816
512
814
506

FIG. 13

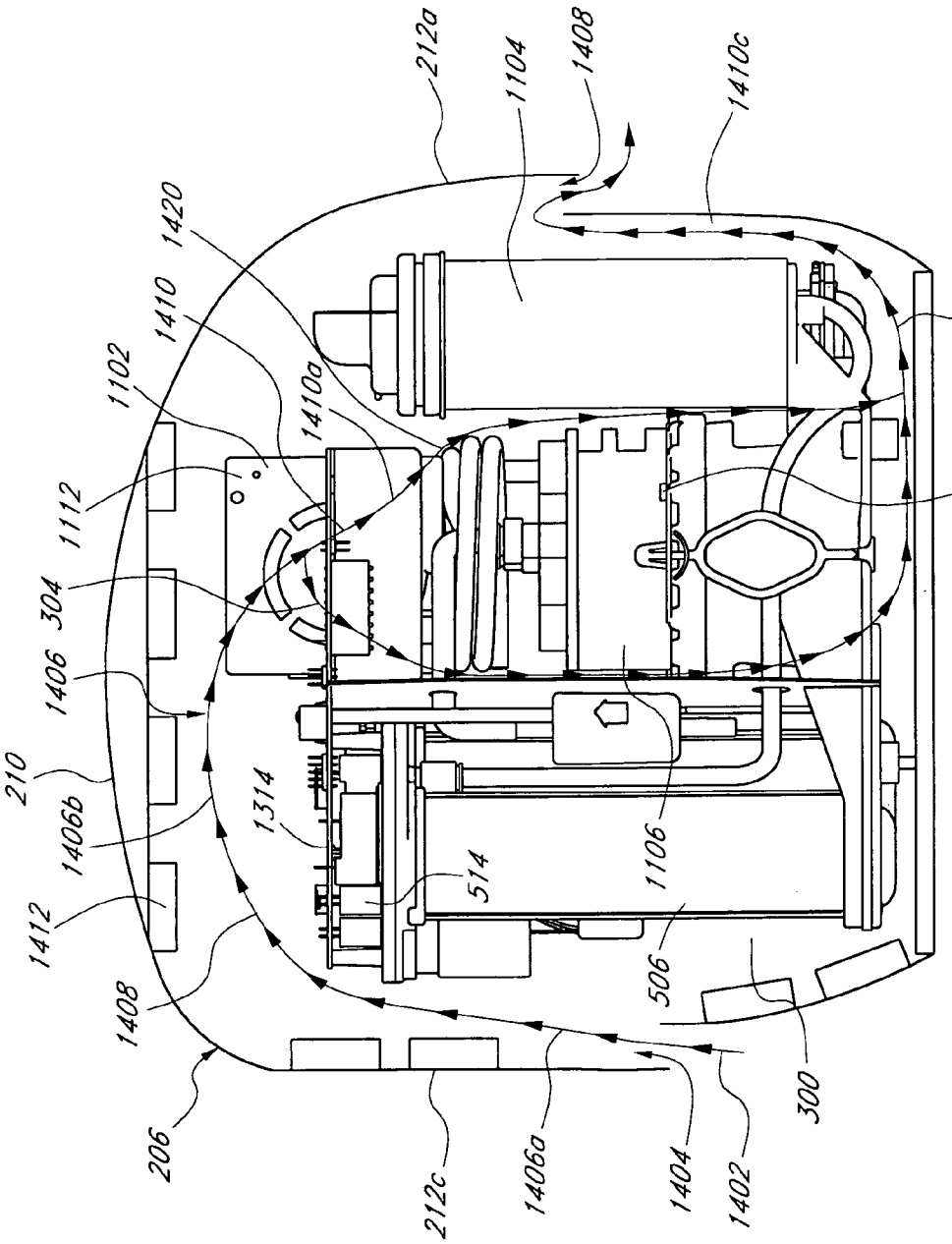
212a
1104
1408
1410c
1420
1410
1102
1410a
1410b
1112
302
304
1406
210
1406b
1314
514
1106
1412
506
1408
300
206
212c
1406a
1404
1402

FIG. 14

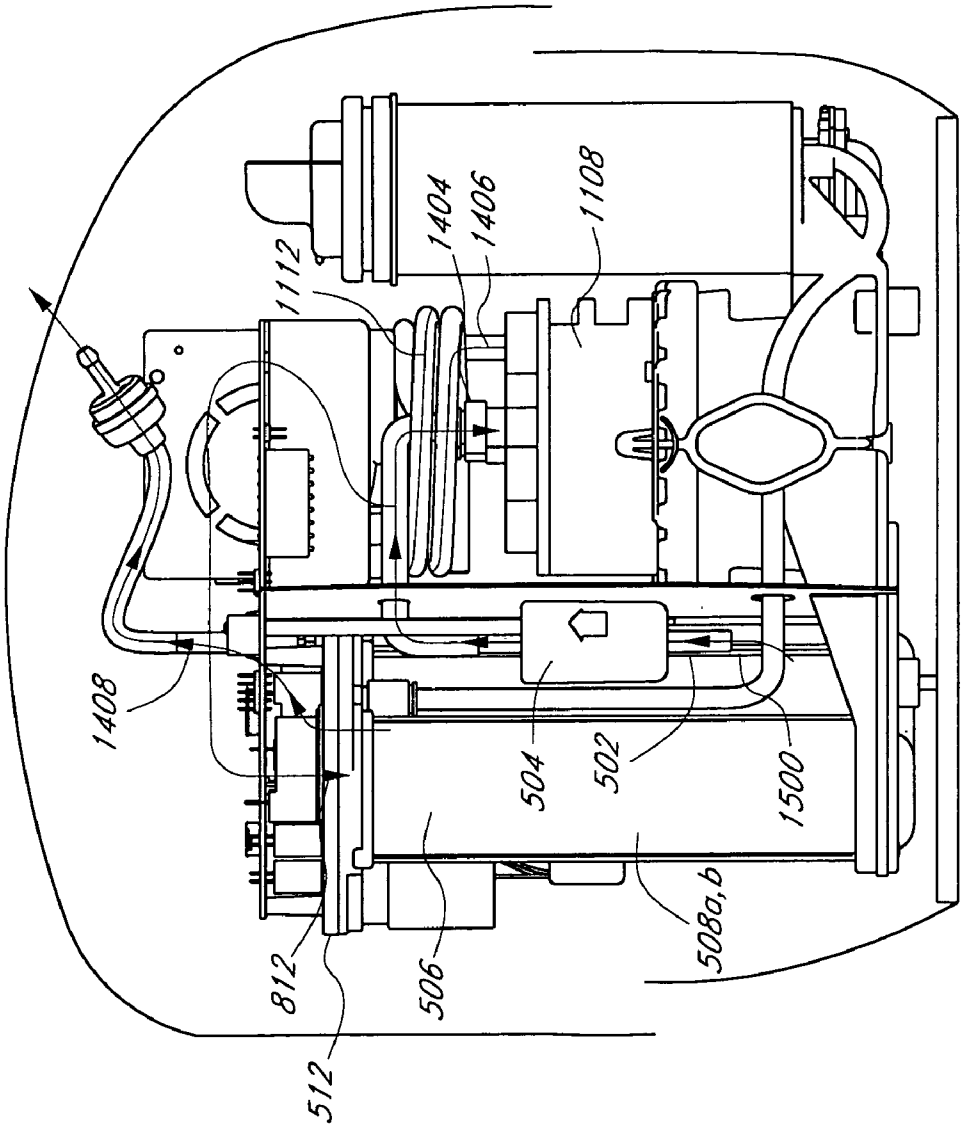

FIG. 15

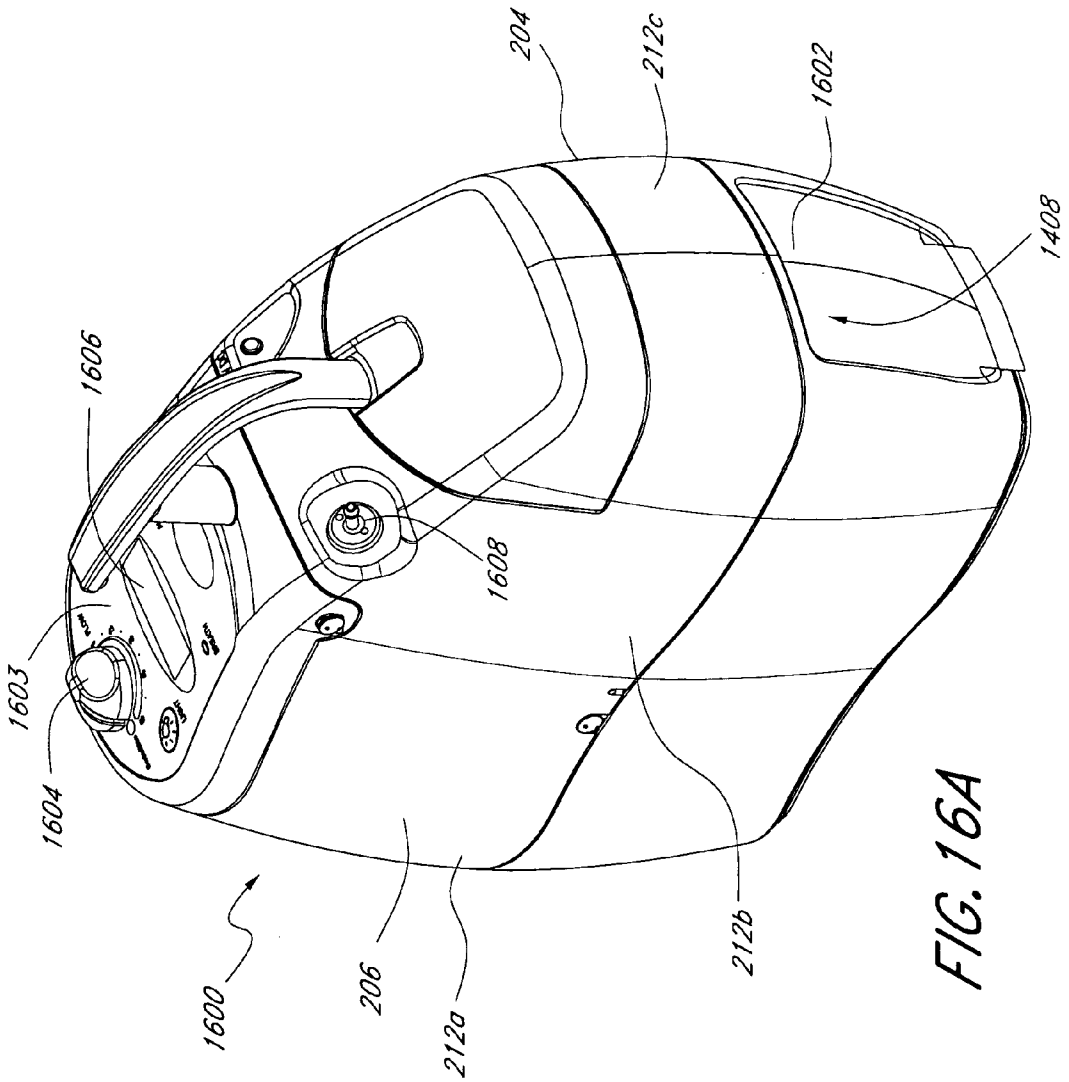

FIG. 16A

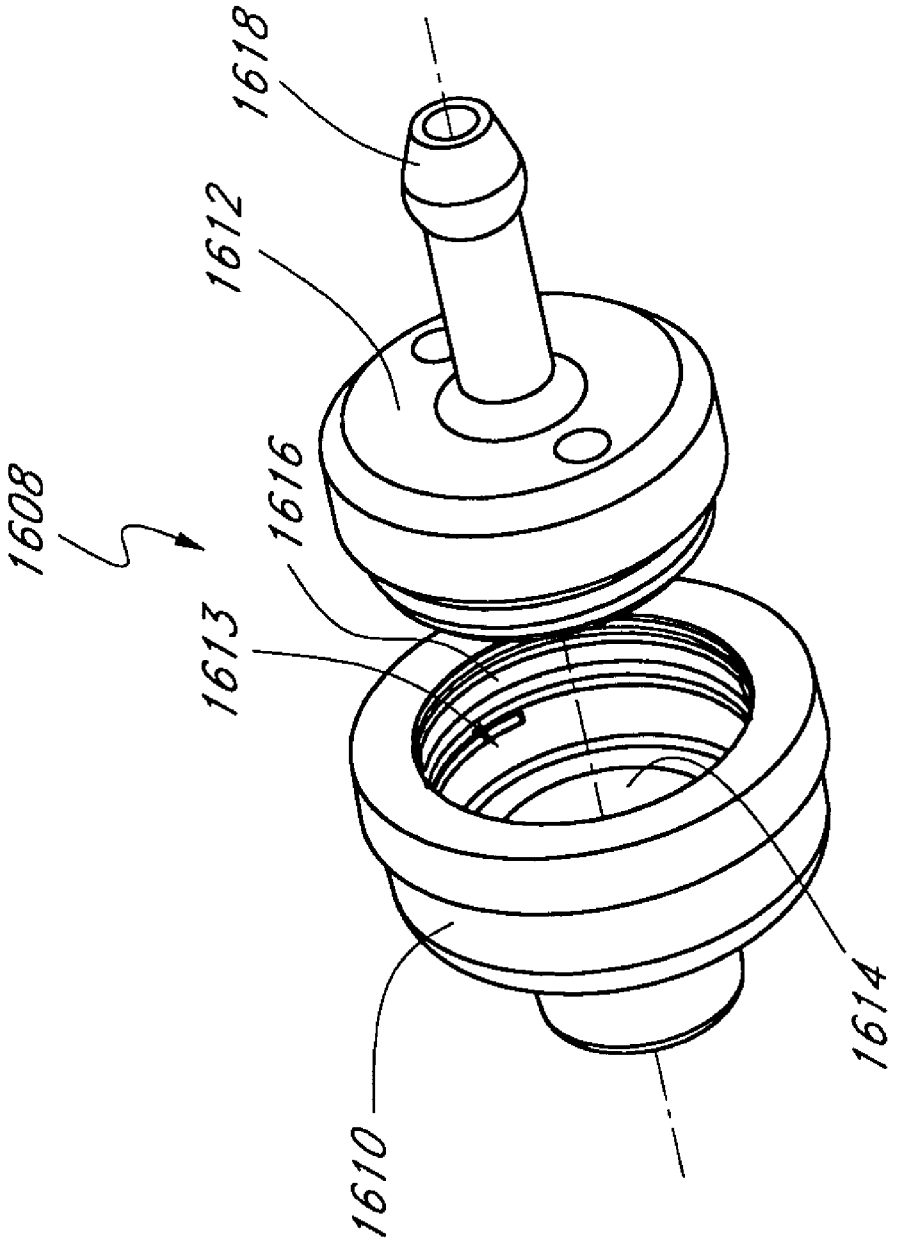

FIG. 16B

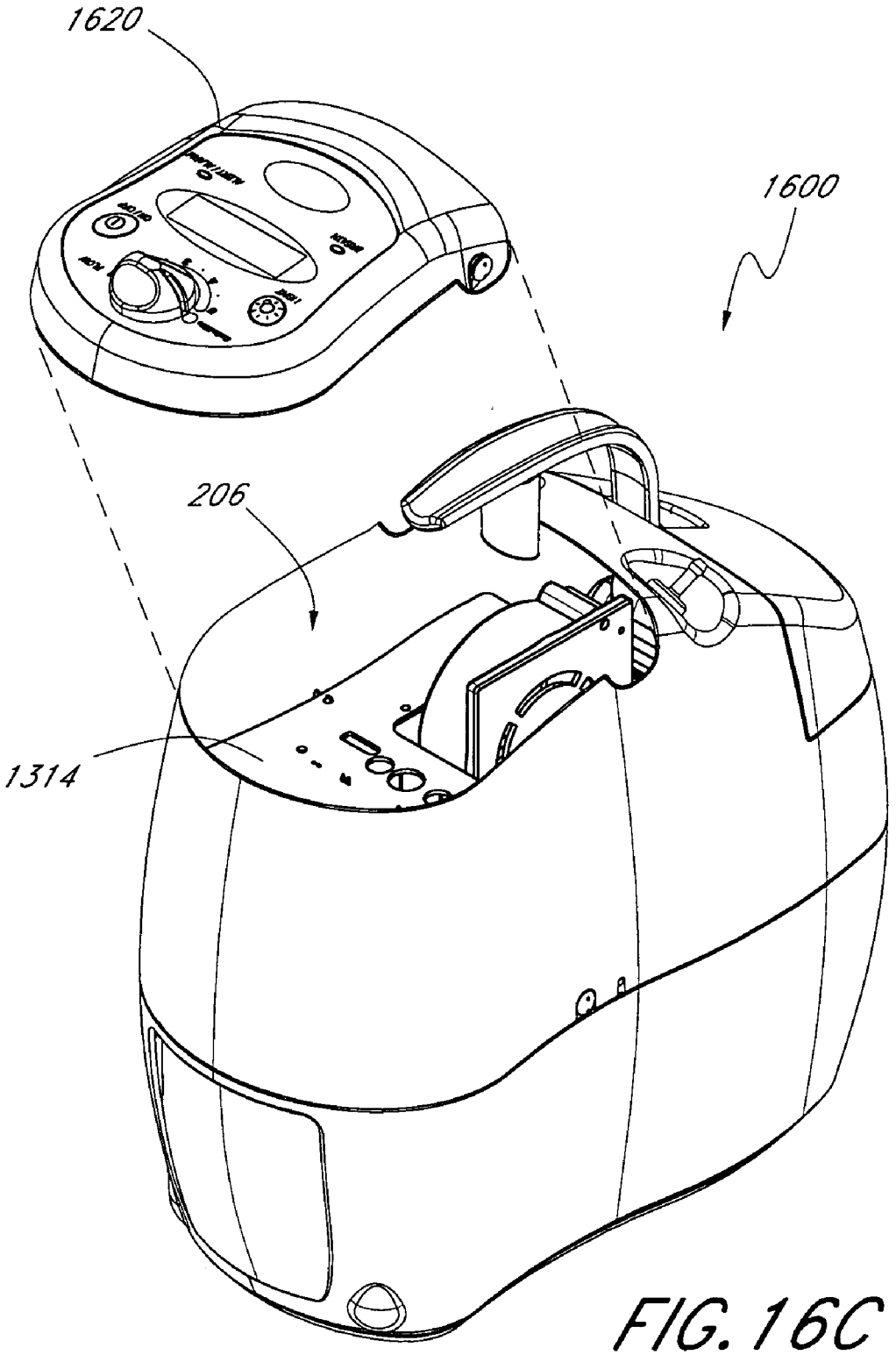

FIG. 16C

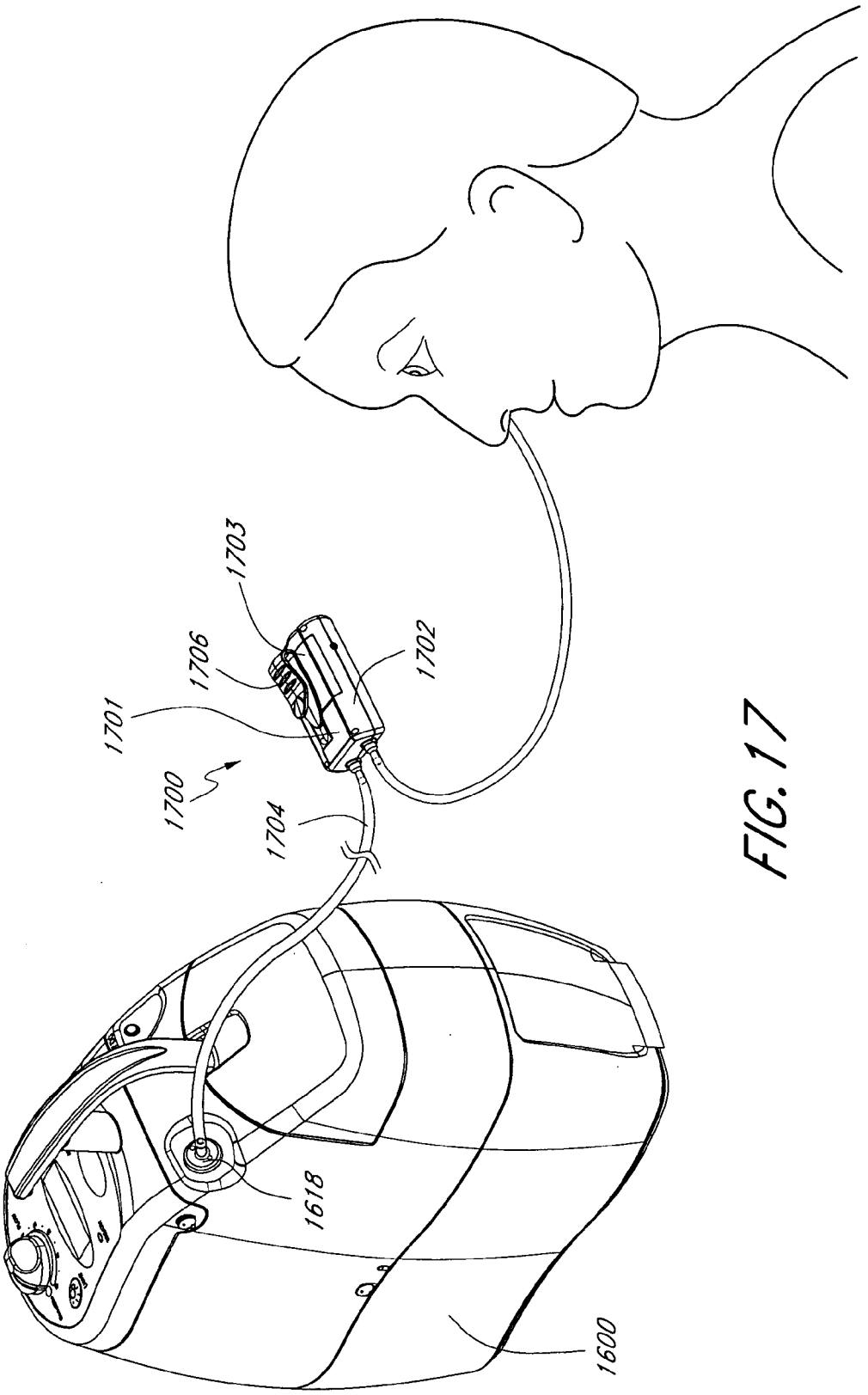

FIG. 17

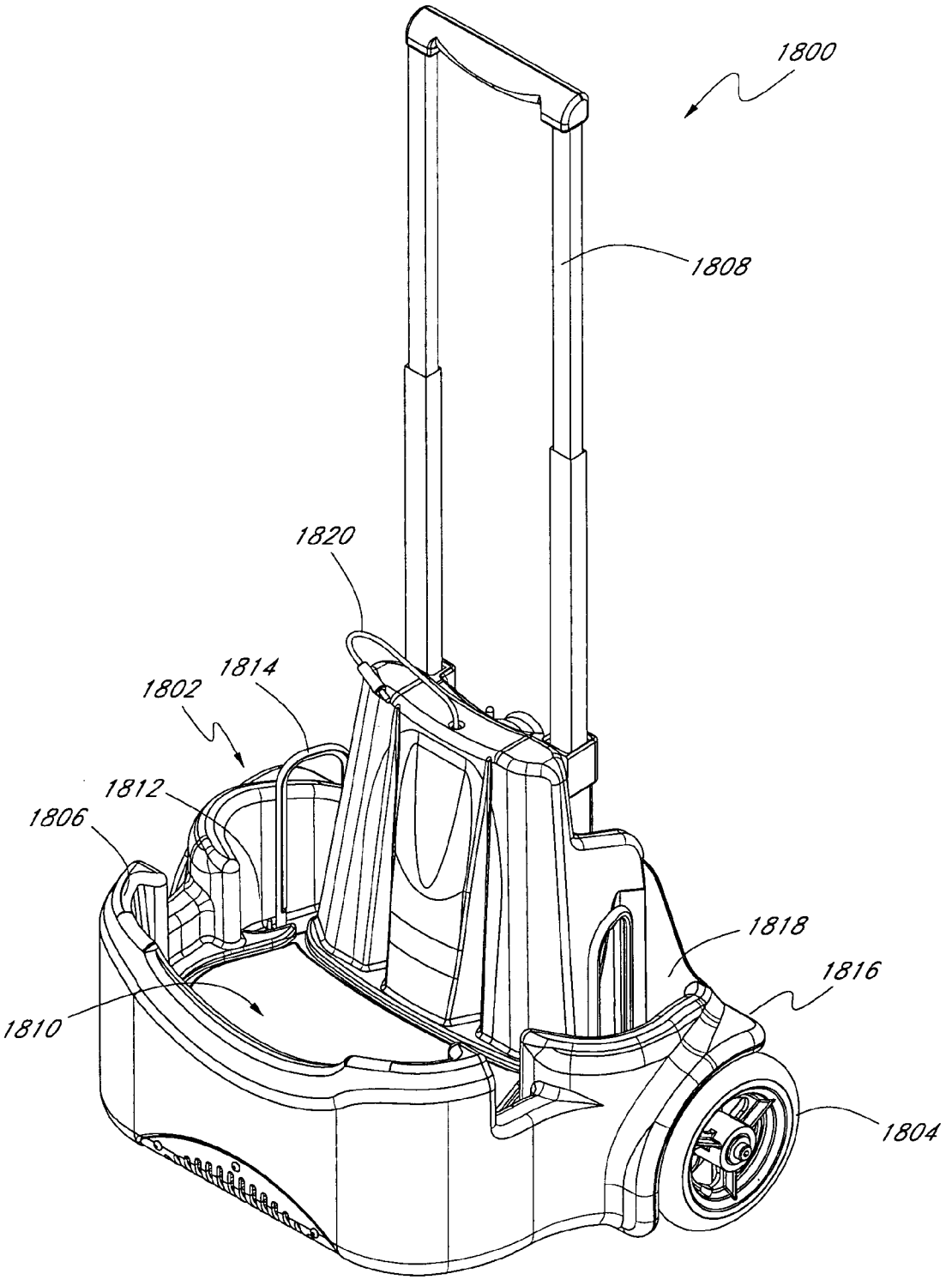

FIG. 18A

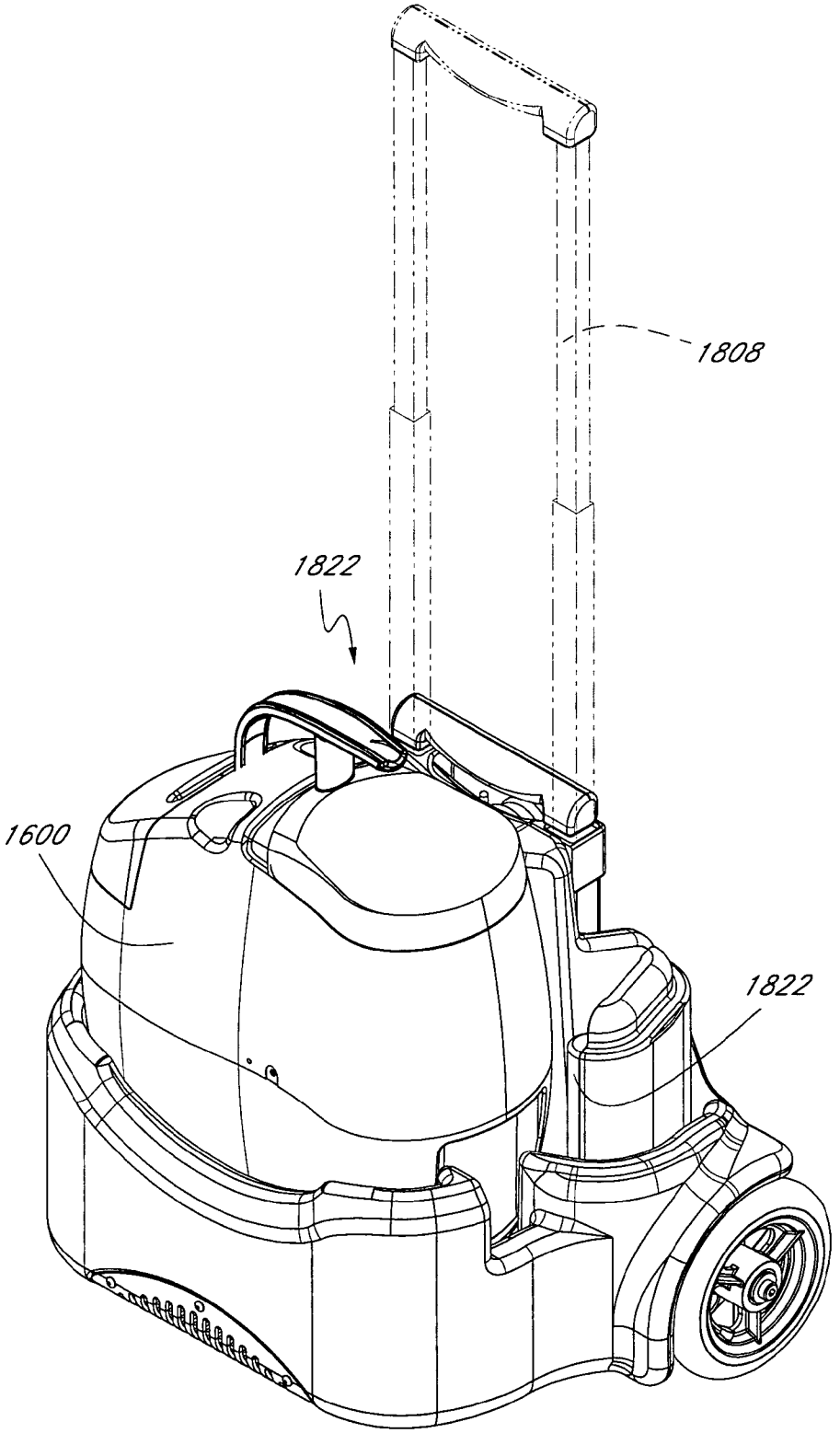

FIG. 18B

PORTABLE GAS FRACTIONALIZATION SYSTEM

BACKGROUND OF THE INVENTION

1. Field of the Invention

This invention relates generally to a portable gas fractionalization system, more particularly, to a compact oxygen concentrator that is suitable for both in-home and ambulatory use so as to provide users greater ease of mobility.

2. Description of the Related Art

Patients who suffer from respiratory ailments such as Chronic Obstructive Pulmonary Diseases (COPD) often require prescribed doses of supplemental oxygen to increase the oxygen level in their blood. Supplemental oxygen is commonly supplied to the patients in metal cylinders containing compressed oxygen gas or liquid oxygen. Each cylinder contains only a finite amount of oxygen that typically lasts only a few hours. Thus, patients usually cannot leave home for any length of time unless they carry with them additional cylinders, which can be heavy and cumbersome. Patients who wish to travel often have to make arrangements with medical equipment providers to arrange for an exchange of cylinders at their destination or along the route, the inconvenience of which discourages many from taking extended trips away from home.

Supplemental oxygen can also be supplied by oxygen concentrators that produce oxygen concentrated air on a constant basis by filtering ambient air through a molecular sieve bed. While oxygen concentrators are effective at continual production of oxygen, they are typically large electrically powered, stationary units that generate high levels of noise, in the range of 50–55 db, which presents a constant source of noise pollution. Moreover, the units are too heavy to be easily transported for ambulatory use as they typically weigh between 35 to 55 lbs. Patients who use oxygen concentrators are thus tethered to the stationary machines and inhibited in their ability to lead an active life. While portable oxygen concentrators have been developed to provide patients with greater mobility, the currently commercially available portable concentrators do not necessarily provide patients with the ease of mobility that they desire. The portable concentrators tend to generate as much noise as the stationary units and thus cannot be used at places such as the theater or library where such noise is prohibited. Moreover, the present portable concentrators have very short battery life, typically less than one hour, and thus cannot be used continuously for any length of time without an external power source.

From the foregoing, it will be appreciated that there is a need for an apparatus and method that effectively provide supplemental oxygen to patients for both in-home and ambulatory use. To this end, there is a particular need for a portable oxygen concentrator that is lightweight, quiet, and can supply oxygen continuously for an extended period without requiring an external power source.

SUMMARY OF THE INVENTION

In one aspect, the preferred embodiments of the present invention provide a portable gas fractionalization apparatus comprising plural adsorbent bed columns mounted side by side and an integral fluid flow manifold mounted on one end of the columns and comprised of a plurality of integrated flow passages and a plurality of valves which control flow of fluid through the integrated flow passages to and from the columns. In one embodiment, the apparatus further comprises a circuit board having circuitry which controls the valves. The manifold is preferably disposed between the circuit board and the one end of the columns. Preferably, contacts on the circuit board are in direct electrical contact with mating contacts on the valves. In one embodiment, the integrated fluid flow manifold comprises at least one piloted valve. In another embodiment, the integrated fluid flow manifold comprises at least one water trap positioned therein. The adsorbent columns preferably comprise one or more feed tubes configured to direct fluid to flow from flow passages in the integrated manifold mounted on one end of the columns to an opening in the other end of the columns. In one embodiment, the integrated manifold comprises an upper plate and a lower plate, each plate is made of a plastic material.

In a second aspect, the preferred embodiments of the present invention provide a portable gas fractionalization apparatus comprising a compressor which produces a feed gas; plural adsorbent beds connected to receive the feed gas from the compressor via a feed gas pathway. The beds preferably provide a purified gas and a waste gas from the feed gas and the waste gas is expelled from the beds via a waste gas pathway. The apparatus further comprises a water trap which traps water condensed in the fluid pathway to prevent the water from reaching the beds. Preferably, the trapped water is located in the waste gas pathway such that the expelled waste gas carries the water away from the beds. In one embodiment, the water trap is positioned at a lower elevation relative to the feed gas pathway, wherein gravity causes the condensed water in the feed gas pathway to flow into the water trap located at the lower elevation. In another embodiment, the water trap is positioned in a laminated manifold, preferably in the center of a three way junction formed by airflow pathways to and from a feed valve, an exhaust valve, and a connection to an adsorbent bed.

In a third aspect, the preferred embodiments of the present invention provide a portable gas fractionalization apparatus comprising a housing, a compressor mounted in the housing on a vibration damping member, and a compressor restraint connected between the compressor and the housing and sufficiently elastically yieldable to non-rigidly fasten the compressor to the housing. In one embodiment, the vibration damping member comprises a grommet having a plurality of ribs formed thereon. In another embodiment, the compressor restraint comprises an elastic tether having elongated legs configured with pre-formed bends which extend away from each other. The bends preferably can be pressed toward each other to straighten the legs and increase the overall length of the compressor restraint so as to facilitate mounting and removal of the compressor restraint.

In a fourth aspect, the preferred embodiments of the present invention provide an adsorbent bed column comprising an elongated housing; an adsorbent material positioned inside the housing, and a first filter positioned proximate one end of the housing. The filter preferably comprises a generally annular member in sealing engagement with the housing, and a filter portion integrally formed as a single piece with the annular member. In one embodiment, the annular member comprises a silicone material and the filter portion comprises a woven fabric that is molded with the annular member. In another embodiment, the first filter is adapted to filter particulate greater than about 70 microns.

In a fifth aspect, the preferred embodiments of the present invention provide an adsorbent bed column comprising an elongated housing; plural adsorbents positioned inside the housing; and a first filter comprised of a frit positioned proximate one end of the housing adjacent at least one

adsorbent. In one embodiment, the column further comprises a second filter comprised of a frit positioned proximate the other end of the housing adjacent at least one adsorbent. Preferably, the first and second filters each has a thickness of at least 0.2 inch so as to be sufficiently thick to substantially restrain movement of the adsorbents inside the housing. In another embodiment, the column further comprises a wave spring positioned against an exterior surface of the first filter so as to apply a substantially even pressure over the first filter.

BRIEF DESCRIPTION OF THE DRAWINGS

FIG. **1** is a block diagram of a portable gas fractionalization system of one preferred embodiment of the present invention;

FIG. **2** is a perspective view of a portable gas fractionalization apparatus of another preferred embodiment, which is shown in the form of an oxygen concentrator;

FIG. **3** is a perspective view of the apparatus of FIG. **2** as seen with the shell removed;

FIG. **4** is a perspective view of the chassis of the apparatus of FIG. **2**;

FIG. **5** is a perspective view of the components inside the first compartment of the apparatus of FIG. **2**, showing a PSA unit;

FIG. **6** is a schematic illustration of an adsorbent bed column of the PSA unit of FIG. **5**;

FIGS. **7**A and **7**B are schematic diagrams of gas flow to and from the adsorbent bed column of FIG. **6**;

FIG. **8** is a detailed view of the integrated manifold of the PSA unit of FIG. **5**;

FIG. **9** is a schematic illustration of a water trap system incorporated in the integrated manifold of FIG. **8**;

FIG. **10** is a schematic illustration of a piloted valve system incorporated in the integrated manifold of FIG. **8**;

FIG. **11** is a perspective view of the components inside the second compartment of the apparatus of FIG. **2**, showing a compressor system;

FIG. **12** is a perspective view of a vibration damping member incorporated in the compressor system of FIG. **11**;

FIG. **13** is a perspective view of the components assembled in the housing of the apparatus of FIG. **2**;

FIG. **14** is a schematic diagram of a directed ambient air flow through the housing of the apparatus of FIG. **2**, illustrating a thermal management system of one preferred embodiment;

FIG. **15** is a schematic diagram of a gas flow through the components of the apparatus of FIG. **2**;

FIG. **16**A is perspective view of the apparatus of FIG. **2**, showing an in-line filter integrated in the shell of the apparatus;

FIG. **16**B is a detailed view of the in-line filter of FIG. **16**B;

FIG. **16**C is a perspective view of the apparatus of FIG. **2**, showing a removable hatch;

FIG. **17** is a schematic illustration of a satellite conserver used in conjunction with the apparatus of FIG. **2**;

FIGS. **18**A and **18**B are schematic illustrations of a mobility cart used in conjunction with the apparatus of FIG. **2** for transporting the apparatus.

DETAILED DESCRIPTION OF PREFERRED EMBODIMENTS

FIG. **1** schematically illustrates a portable gas fractionalization system **100** of one preferred embodiment of the present invention. As shown in FIG. **1**, the system **100** generally comprises an intake **102** through which ambient air is drawn into the system, a filter **104** for removing particulate from the intake air, a compressor assembly **106** for pressurizing the intake air to provide a feed gas, a pressure swing adsorption (PSA) unit **108** which receives and processes the feed gas to produce a product gas having a higher oxygen content than the ambient air, and a gas delivery system **110** for delivering the product gas to a patient.

Ambient air is drawn through the intake **102** at a relatively low flow rate, preferably no greater than about 15 standard liters per minute (slpm), so as to reduce noise due to airflow through the system. The system **100** further includes a fan **112** that produces an air stream across the compressor assembly **106** also preferably at a relatively low flow rate so as to provide cooling for the compressor assembly **106** without generating excessive noise.

As also shown in FIG. **1**, the compressor assembly **106** includes a compressor **114** and a heat exchanger **116**. The compressor **114** is preferably a non-reciprocating compressor, more preferably a scroll compressor described in U.S. Pat. Nos. 5,759,020 and 5,632,612, which are hereby incorporated by reference in their entirety. It is generally understood that a scroll compressor operates by moving a plate such that it orbits in a single plane relative to a fixed plate. Thus, the use of a scroll compressor advantageously eliminates reciprocating motion that tends to generate the excessive noise and vibration associated with many conventional piston compressors. In one embodiment, the scroll compressor **114** delivers an air flow of between about 4 to 9 slpm at a pressure of about 35 psia, while generating a noise level of less than about 35 dB external to the compressor. The scroll compressor **114** does not require lubricating oil and thus operates in a substantially oil-free environment, which advantageously reduces the likelihood of introducing oil contaminants into the compressed air. As FIG. **1** further shows, the compressor **114** works in conjunction with the heat exchanger **116** to provide cooled feed gas to the PSA unit **108**. In one embodiment, the heat exchanger **116** has a large thermally conductive surface that is in direct contact with the air stream produced by the fan **112** such that pressurized air traveling through the heat exchanger **116** can be cooled to a temperature close to ambient prior to being supplied to the PSA unit **108**.

The PSA unit **108** is configured to operate in accordance with a pressure swing adsorption (PSA) cycle to produce an oxygen enriched product gas from the feed gas. The general operating principles of PSA cycles are known and commonly used to selectively remove one or more components of a gas in various gas fractionalization devices such as oxygen concentrators. A typical PSA cycle entails cycling a valve system connected to at least two adsorbent beds such that a pressurized feed gas is sequentially directed into each adsorbent bed for selective adsorption of a component of the gas while waste gas from previous cycles is simultaneously purged from the adsorbent bed(s) that are not performing adsorption. Product gas with a higher concentration of the un-adsorbed component(s) is collected for use. Additional background information on PSA technology is described in U.S. Pat. No. 5,226,933, which is hereby incorporated by reference.

As shown in FIG. **1**, the PSA unit **108** of a preferred embodiment includes two adsorbent beds **118***a*, **118***b*, each containing an adsorbent material that is selective toward nitrogen, and a plurality of valves **120***a–j* connected thereto for directing gas in and out of the beds **118***a*, **118***b*. As will

be described in greater detail below, the valves **120***a–j* preferably operate in accordance with a novel PSA cycle which comprises a six step/two bed process that includes a pressure equalization step in which a portion of the effluent product gas from one bed is diverted to pressurize another bed in order to improve product recovery and reduce power consumption. One preferred embodiment of the PSA cycle comprises the following steps:

Step **1**: Pressurize-Adsorbent Bed **118***a*/Production-Adsorbent Bed **118***b*

pressurizing adsorbent bed **118***a* by directing feed gas into adsorbent bed **118***a* in the co-current direction at a feed pressure of about 35 psia while simultaneously diverting oxygen enriched product gas of higher pressure from adsorbent bed **118***b* into adsorbent bed **118***a* in the counter-current direction until pressures of the two beds **118***a*, **118***b* are substantially equalized;

releasing product gas from adsorbent bed **118***b* to a storage vessel **124** while stopping the flow of feed gas from entering adsorbent bed **118***b;*

Step **2**: Feed-Adsorbent Bed **118***a*/Blowdown-Adsorbent Bed **118***b*

feeding adsorbent bed **118***a* with feed gas at a rate of about 4–8.5 slpm at a feed pressure of about 35 psia;

counter-currently releasing nitrogen enriched waste gas from adsorbent bed **118***b* to an exhaust muffler **122**;

Step **3**: Feed and Production-Adsorbent Bed **118***a*/Purge-Adsorbent Bed **118***b*

releasing product gas from adsorbent bed **118***a* to the storage vessel **124** while continuing to feed adsorbent bed **118***a* with feed gas at a rate of about 4–8.5 slpm. at a feed pressure of about 35 psia;

purging adsorbent bed **118***b* by releasing product gas from the storage vessel **124** to adsorbent bed **118***b* while continuing to counter-currently release waste gas from adsorbent bed **118***b* to the exhaust muffler **122**;

Step **4**: Production-Adsorbent Bed **118***a*/Pressurize-Adsorbent Bed **118***b*

continuing to release product gas from adsorbent bed **118***a* to the storage vessel **124** while stopping the flow of feed gas from entering adsorbent bed **118***a;*

pressurizing adsorbent bed **118***b* by directing feed gas into adsorbent bed **118***b* in the co-current direction at a feed pressure of about 35 psia while simultaneously diverting product gas of higher pressure from adsorbent bed **118***a* into adsorbent bed **118***b* in the counter-current direction until pressures of the two beds **118***a*, **118***b* are substantially equalized;

Step **5**: Blowdown-Adsorbent Bed **118***a*/Feed-Adsorbent Bed **118***b*

counter-currently releasing waste gas from adsorbent bed **118***a* to the exhaust muffler **122**;

feeding adsorbent bed **118***b* with feed gas at a rate of about 4–8.5 slpm at a feed pressure of about 35 psia;

Step **6**: Purge-Adsorbent Bed **118***a*/Feed and Production-Adsorbent Bed **118***b*

releasing product gas from adsorbent bed **118***b* to the storage vessel **124** while continuing to feed adsorbent bed **118***b* with feed gas at a rate of about 4–8.5 slpm at a feed pressure of about 35 psia;

purging adsorbent bed **118***a* by releasing product gas from the storage vessel **124** to adsorbent bed **118***a* while continuing to counter-currently release waste gas from adsorbent bed **118***a* to the exhaust muffler **122**;

The PSA cycle described above advantageously includes one or more pressure equalization steps (steps **1** and **4**) in which already pressurized product gas is released from one adsorbent bed to provide initial pressurization for another adsorbent bed until the two beds have reached substantially the same pressure. The pressure equalization step leads to increased product recovery and lower power consumption because it captures the expansion energy in the product gas and uses it to pressurize other adsorbent beds, which in turn reduces the amount of power and feed gas required to pressurize each bed. In one embodiment, the two-bed PSA unit shown in FIG. **1** operating in accordance with the above-described six-step/two-bed PSA cycle is capable of producing oxygen having a purity of at least about 87%, preferably between about 87%–93%, with greater than about 31% recovery of oxygen from feed gas, more preferably greater than about 38% recovery. In operation, the valves **120***a–j* of the PSA unit **108** are controlled in a known manner to open and close for predetermined time periods in accordance with the above described PSA steps. Additionally, the valves **120***a–j* are preferably positioned upstream of the air stream produced by the fan **112** across the compressor assembly **106** so as to not to expose the valves **120***a–j* to portions of the air stream that are heated by the compressor assembly **106**. In other embodiments, the system may utilize a vacuum swing adsorption (VSA) unit or a vacuum-pressure swing adsorption (VPSA) unit to produce the oxygen rich product gas.

As FIG. **1** further shows, the product gas produced by the PSA unit **108** is delivered to a patient via the product gas delivery system **110**. The product gas delivery system **110** generally includes an oxygen sensor **126** for monitoring the oxygen content of the product gas exiting the storage vessel **124**, a delivery valve **128** for metering the product gas to the patient, an in-line filter **130** for removing fine particulate in the product gas immediately prior to delivery to the patient, a conserver device **132** that controls the amount and frequency of product gas delivered based on the patient's breathing pattern. In certain embodiments, the product gas delivery system may also incorporate a unit that measures pressure within the storage vessel which in turn dictates the rate at which product gas is driven through the delivery valve. Preferably, product gas is delivered to the patient at a flow rate of about 0.15–0.75 slpm at about 90% oxygen content. In one embodiment, the system **100** also includes a microprocessor control **134** for collecting and recording data on system performance or patient usage pattern and an infrared port **136** for transmitting the data to a remote location.

FIG. **2** illustrates a gas fractionalization apparatus **200** of the preferred embodiment, which is shown in the form of a portable oxygen concentrator. As illustrated in FIG. **2**, the apparatus **200** generally comprises a chassis **202** (see also FIG. **3**) and a shell **204** that together form a housing **206** in which various components are mounted. The chassis **202** is removably attached to a base **208** of the housing **206**. The base **208** has a substantially planar exterior bottom surface adapted to rest against a support surface such as a table or floor. The shell **204** of the housing **206** further includes an upper wall **210** and side walls **212***a–d*, each having at least one convex and/or concave section that provides a curvature to the wall so as to reduce coupling of sound or vibration energy generated by the components in the housing. Such curvature is also effective to reduce constructive interference of the coupled energy within the walls. Accordingly, the lack of planar sections in the walls **210**, **212***a–d* of the housing **206** that are conducive to vibration reduces noise induced by vibration. Moreover, the non-planar walls **210**, **212***a–d* also serve to discourage users from setting the housing on its side or placing it in any orientation other than the upright as the

components inside the housing are designed to operate optimally in the upright orientation, which will be described in greater detail below.

As shown in FIG. **3**, the components in the housing **206** are structurally supported by the chassis **202** and the chassis **202** is removably attached to the shell **204**. As such, the components can be assembled outside the confines of the shell **204**. Also, the shell can be conveniently removed to provide access for testing, repair, or maintenance of the components. Additionally, the housing **206** is preferably separated into two compartments **300**, **302** by a partition **304**. The partition **304** in conjunction with an air flow system to be described in greater detail below significantly inhibits migration of thermal energy from the second compartment **302** to the first compartment **300**. Preferably, heat sensitive components are placed in the first compartment **300** and heat generating components are mounted in the second compartment **302** so as to thermally isolate the heat sensitive components from the heat generating components for optimal system performance.

FIG. **4** provides a detailed view of the chassis **202**, as seen without the components. As shown in FIG. **4**, the chassis **202** contains a number of pre-formed structures configured to receive and support the different components in the housing. Three circular recess **400***a–c* are formed in a first base portion **402** of the chassis **202** for mating with a PSA unit. Three corresponding divots **404***a–c* are also formed in the first base portion **402** immediately adjacent each respective recess **400***a–c*. The divots **404***a–c* extend laterally into each respective recess **400***a–c* to direct gas flow in and out of the PSA unit in a manner to be described in greater detail below. As such, the chassis serves as a manifold of sorts for routing gases to and from the PSA unit. An annular compressor mount **406** extends upwardly from a second base portion **408** of the chassis **202** to provide an elevated mounting surface for a compressor assembly and define an opening **410** sufficiently large to receive a portion of the assembly. As will be described in greater detail, the compressor mount **406** is configured to support the compressor assembly in a manner such that transfer of vibrational energy from the compressor assembly to the housing is reduced. As also shown in FIG. **4**, an oblong slot **412** and a bail **414** are formed adjacent the compressor mount **406** for receiving and securing a battery. In one embodiment, electrical mating contacts are formed in the slot **412** for connecting the battery to operating circuitry. In one embodiment, a battery circuit is mounted on the bottom of the slot which can also contain a IRDA transmitter/receiver. Moreover, the chassis **202** can also be fit with notches to receive and support the bottom of the partition.

Preferably, at least some of the above-described structures of the chassis **202** are integrally formed via an injection molding process so as to ensure dimensional accuracy and reduce assembly time. These pre-formed structures in the chassis advantageously facilitate assembly of the components and help stabilize the components once they are assembled in the housing. In one embodiment, the chassis serves the function of providing an intermediary vibration isolation to the compressor and motor. As shown in FIG. **4**, the chassis has bottom mounts or vibration isolation feet **407** that are configured to engage with the bottom of the shell. Preferably, screws are inserted through the bottom of the shell and into the bottom of the vibration feet **407**. In another embodiment, the chassis further comprises an integrated muffler for exhaust gas. Preferably, a recess is formed below the battery slot in which felt or other porous material is placed. As will be described in greater detail below, an exhaust tube from the PSA unit is preferably ported directly into this recess and the felt serves to break up noise coming from the release of pressurized waste gas.

FIG. **5** provides a detailed view of the components in the first compartment **300** of the housing **206**. As shown in FIG. **5**, the first compartment **300** generally contains an air intake **502**, an intake filter **504**, and a PSA unit **506**. The air intake **502** is an elongated tube coupled to the intake filter **504** and extending downwardly therefrom to receive intake air. The intake filter **504** comprises a cylindrical shaped filter that is preferably capable of removing particles greater than about 0.1 microns from the intake air with about 93% efficiency. Moreover, the shape, density, and material of the intake filter **504** can be selected to provide the filter with acoustic properties so that the filter can also serve as an intake muffler. As will be described in greater detail below, the intake filter **504** is in fluid communication with a compressor system and supplies the compressor system with filtered intake air. Both the air intake **502** and the intake filter **504** are preferably mounted in the first compartment **300** of the housing **206** so as to avoid drawing higher temperature air produced by components in the second compartment into the system.

As FIG. **5** further shows, the PSA unit **506** generally includes a pair of adsorbent bed columns **508***a*, **508***b*, a product gas storage column **510**, and an integrated manifold **512** for controlling fluid flow to and from the columns **508***a–b*, **510**. Each adsorbent bed column **508***a–b* comprises an elongated housing containing a nitrogen-selective adsorbent material such as zeolite. The adsorbent bed columns **508***a–b* are adapted to remove nitrogen from intake air in a known manner in accordance with a PSA cycle so as to produce an oxygen rich product gas. The product gas storage column **510** comprises an elongated housing adapted to receive and store the oxygen rich product gas. In one embodiment, the product gas storage column **510** also contains an adsorbent material capable of holding a higher molar density of the product gas than an equivalent gas filled chamber at equal pressure. As shown in FIG. **5**, all three columns **508***a–b*, **510** are mounted side by side in the housing **206**. Preferably, the columns **508***a–b*, **510** have substantially the same length so that the integrated manifold **512** can be mounted horizontally on the upper end of the columns **508***a–b*, **510**.

As will be described in greater detail below, the integrated manifold **512** contains a plurality of integrated flow passages formed in a single plane that permit fluid to flow to and from the columns **508***a–b*, **510**. The integrated manifold **512** also has a plurality of solenoid valves **514** positioned in a single plane that control the flow of the fluid to and from the columns **508***a–b*, **510** during a PSA cycle. As shown in FIG. **5**, the integrated manifold **512** is mounted on the upper end of the columns **508***a–b*, **510** in a manner such that the integrated flow passages in the manifold are in fluid communication with openings in the upper end of each column. While the manifold **512** is positioned on only the upper end of the columns, gas flow from the manifold can enter the column housing through either the upper or lower end due to a novel single-ended column design to be described in greater detail below. In one embodiment, the valves **514** of the manifold **512** contain a plurality of contact pins **516** adapted for direct contact with a circuit board in a manner to be shown in greater detail below. A circuit board controlling the valves can be mounted directly on top of the manifold **512** without additional wires, which advantageously simplifies the assembly process and also allows for the construction of a more compact device.

In one embodiment, an oxygen sensor **518** is mounted on the integrated manifold **512** and ported directly into a product gas flow passage in the manifold **512**. The oxygen sensor **518** is configured to measure the oxygen concentration in the product gas using a galvanic cell or other known devices. Mounting the oxygen sensor **518** directly on the integrated manifold **512** results in a more compact assembly as it eliminates the use of tubing and connectors that are typically required to interconnect the oxygen sensor to the PSA unit. Moreover, it also places the oxygen sensor **518** closer to the product gas stream, which is likely to improve the accuracy and response time of the sensor. In another embodiment, a breath detector **520** is also ported into the integrated manifold **512**. The breath detector **520** generally comprises one pressure transducer that senses pressure change in the product gas downstream of the product delivery valve (shown schematically in FIG. **1**) caused by inhalation and exhalation of the patient so that the gas delivery frequency can be adjusted accordingly. The breath detector **520** may also include a second pressure transducer that senses the storage vessel pressure which is used to drive the delivery of the product to the patient through the product delivery valve. The breath detector **520** ports directly into the manifold instead of tapping into the product line downstream, which obviates the need of additional tubing connections and reduces the risk of leakage.

Advantageously, the PSA unit **506** has many novel features which, individually and in combination, contribute to a lighter, more compact and reliable apparatus. As shown in FIG. **5**, the PSA unit **506** is mounted in the first compartment **300** which is thermally isolated from other heat generating components in the housing **206**. Thermal isolation of the PSA unit **506** substantially prevents heat degradation of the valves **514** and other components in the unit. The PSA unit **506** is also configured with integrated gas flow passages so as to substantially eliminate the use of flexible tubing, which in turn reduces the number of potential leak points. Moreover, the PSA unit **506** is designed to operate with a single, generally planar integrated manifold mounted horizontally on one end of the columns. The single manifold design reduces the amount of space the PSA unit occupies inside the housing and also reduces potential leak points. Additionally, the PSA unit **506** is configured to directly connect to a circuit board without additional wires, which further conserves space and simplifies assembly.

FIG. **6** provides a detailed view of the adsorbent bed columns **508***a*, **508***b* of the PSA unit, illustrating the novel single-ended column design briefly described above. As shown in FIG. **6**, the column **508***a* generally includes an elongated adsorbent housing **602** having an upper end **604** and a lower end **606**, each defining an opening through which gas can flow in and out of the housing **602**. The column **508***a* further includes an integrated feed tube **608** extending from the upper end **604** of the housing **602** to the lower end **606**. The feed tube **608** provides a gas passageway between the manifold and the housing **602** such that gas from the manifold can be routed through the feed tube **608** into the lower end **606** of the housing **602** and vice versa. This design eliminates the need of a second manifold for directing gas into the lower end **606** of the housing **602** and allows all flow passages in the manifold to be co-located in a single plane, which significantly reduces the number of tubing connections and potential leak points in the unit.

The feed tube **608** preferably has a relatively small internal diameter to substantially minimize head space. It is generally recognized that the feed passage in a PSA unit represents head space, which is undesirable as it penalizes system performance. In one embodiment, the feed tube **608** has an internal diameter of about 0.125 inch and the adsorbent housing **602** has a diameter of about 1.5 inch. Moreover, the adsorbent housing **602** and the feed tube **608** are preferably integrally formed in an extrusion process so as to eliminate the use of flexible tubing and reduce potential leakage. In certain embodiments, the adsorbent bed column **508***a* further includes a plurality of threaded mounting members **610** positioned adjacent the adsorbent housing **602** for mating with screws that attach the column **508***a* to the chassis and manifold. The threaded mounting members **610** are preferably co-extruded with the housing **602** and the feed tube **608** so as to simplify part construction.

As also shown in FIG. **6**, the adsorbent bed housing **602** contains an adsorbent material **612**, an upper and a lower restraining disk **614***a*, **614***b* for inhibiting movement of the adsorbent material **612**, a spring **616** that applies pressure across the upper restraining disk **614***a* to keep the disk **614***a* in position. In one embodiment, the adsorbent material **612** comprises a granular material such as zeolite that can be easily dislodged. The restraining disks **614***a–b* are preferably comprised of a frit material that can also serve as a filter for gross particulate, such as dislodged zeolite. Each restraining disk **614***a–b* has a diameter selected to form an interference fit with the internal walls of the housing **602** and has a thickness of at least about 0.2 inch, to provide some resistance to tilting of the disk, which may lead to leaks of particulate. The thickness of the disk **614***a–b* coupled with the nature of the frit material provide a tortuous path for particulate to travel through, which increases the effectiveness in trapping the particulate as compared to conventional paper filters. As also shown in FIG. **6**, the upper restraining disk **614***a* is pressed against the adsorbent material **612** by the spring **616**. The spring **616** is preferably a wave spring configured to apply substantially uniform pressure across the surface of the upper restraining disk **614***a*, so as to substantially inhibit the disk from tilting.

As also shown in FIG. **6**, the adsorbent bed column **508***a* further includes annular gaskets **616***a*, **616***b* positioned adjacent to and in sealing engagement with the ends **604**, **606** of the column **508***a* to contain the pressurized gases therein. In one embodiment, each annular gasket **616***a–b* further comprises an integrally formed filter portion **618***a*, **618***b* for filtering smaller particulate that cannot be captured by the restraining disks **614***a–b*. Preferably, the filter portion is capable of filtering particles greater than about 70–120 microns. In one embodiment, the gasket **616***a–b* is made of a silicone material and the filter portion **618***a–b* comprises a woven fabric, woven screen, or the like that is cast or molded together with the gasket. In another embodiment, the gasket **616***a–b* and filter portion **618***a–b* for all three columns of the PSA unit are injection molded as a single piece as shown in FIG. **6**. Preferably, the filter portion **618***a–b* is embedded in the gasket **616***a–b* so as to facilitate placement of the filter portion and ensure a reliable seal between the gasket and the filter portion. Moreover, openings **620** are formed in each gasket **616***a–b* to accommodate openings in the feed tubes and the threaded mounting members.

FIGS. **7**A and **7**B provide schematic illustrations of the adsorbent bed column **508***a* in combination with the chassis **202** and the manifold **512**, showing the manners in which gas flow is directed in and out of the column **508***a* in accordance with the single-ended column design. As shown in FIG. **7**A, feed gas **702** is directed from a feed stream **704** in the manifold **512** into an upper opening **706** of the feed tube **608**. The feed gas **702** travels downwardly through the tube **608** and is diverted by a divot **404***a* in the chassis **202**

into a recess **400***a* underneath the lower end **606** of the adsorbent housing **602**. The divot **404***a*, which is pre-formed in the chassis **202**, advantageously serves as a lateral gas flow passageway so as to eliminate the need of any flexible tubing on the lower end of the column, which in turn simplifies assembly and reduces potential leak points. The feed gas **702** flows upwardly from the recess **400***a* through the lower end **606** of the housing **602** and upwardly through the adsorbent material contained in the housing **602**. The adsorbent material selectively removes one or more components in the feed gas **702** in a known manner to form a product gas **708**. The product gas **708** flows out of an upper end **604** of the housing **602** into a product stream **710** in the manifold **512**. FIG. **7**B shows the manner in which purge gas is directed in and out of the column. As shown in FIG. **7**B, purge gas **712** from a product stream **714** in the manifold **512** is directed through the upper end **604** of the housing **602** downwardly into the housing **602** to flush out the gas therein. The purge gas **712** exits the lower end **606** of the housing **602** and is channeled through the divot **404***a*. The divot **404***a* directs the purge gas **712** to flow into a lower opening **716** of the feed tube **608**. The purge gas **712** exits the feed tube **608** through its upper opening **706** and enters a waste stream **718** in the manifold **512**. As FIGS. **7**A and **7**B illustrate, the single-ended column design in conjunction with the divot formed in the chassis allow gas from a single-planed manifold to enter and exit the adsorbent housing through either the upper or lower end of the housing.

FIG. **8** provides a detailed view of the integrated manifold **512** of the PSA unit. As shown in FIG. **8**, the integrated manifold **512** generally includes an upper plate **802** and a lower plate **804**, each having grooves formed in an inner surface thereof. The grooves of the lower plate align with those of the upper plate so as to form fluid passages in the manifold **512** when the upper plate **802** is affixed to the lower plate **804**. The fluid passages may include feed gas pathways, waste gas pathways, and gas pathways interconnecting the adsorbent columns. The specific pattern of the fluid passages in the manifold can vary, depending on the particular application, although the passages of the preferred embodiment correspond to the circuit of FIG. **1**. As also shown in FIG. **8**, the upper plate **802** has a feed gas inlet **812** through which pressurized air from the compressor system is directed into the manifold **512**. The lower plate **804** has a waste gas outlet **814** through which exhaust gas is expelled from the manifold **512** and a plurality of openings to connect the fluid passages with the adsorbent columns. Solenoid valves **816** are mounted on an upper surface **818** of the upper plate **802** in a known manner to control the flow of fluid between the fluid passages and the PSA columns. Bores **820** are also formed in the upper and lower plates **802**, **804** for receiving fasteners used to mount the plates together and onto the PSA columns. In one embodiment, the plates **802**, **804** of the manifold **512** are made of a plastic material formed by injection molding and laminated together via an adhesive bond applied in a vacuum. When compared to conventional laminated manifolds that are typically constructed of machined metal plates, the integrated manifold **512** formed by injection molding is advantageously lighter and less costly to manufacture.

FIG. **9** schematically illustrates a water trap system **900** integrated in the manifold **512** for removing moisture from the feed gas prior to delivery to the columns. As shown in FIG. **9**, the water trap system **900** generally includes an integrated water trap **902** formed in the manifold **512** and in fluid communication with a feed gas pathway **904**. The water trap **902** is adapted to trap condensed water **906** in the feed gas by gravity so as to prevent the water from reaching the adsorbent bed **908**. Preferably, the water trap **902** is located in a waste gas pathway **910** such that expelled waste gas carries the condensed water out through the exhaust.

In one embodiment, the water trap **902** is configured as a recess in the lower plate **804** of the manifold **512**, extending downwardly from a section of the feed gas pathway **904** located in the upper plate **802**. The water trap **902** is positioned at a lower elevation relative to the feed gas pathway **904** so as to substantially prevent trapped water **906** from re-entering the feed gas pathway **904**. In certain embodiments, a baffle **912** is positioned in the feed gas pathway **904** to divert the feed gas flow downwardly into the water trap **902** so that the gas is required to rise upwardly to return to the feed gas pathway **904**, which substantially prevents any condensed water from being carried past the water trap by the feed gas flow. As also shown in FIG. **9**, the water trap **902** is in line with the waste gas pathway **910** located in the lower plate **804** of the manifold **512** so that the water trap **902** can be purged by waste gas flowing through the pathway **910**. In one embodiment, the water trap **902** is located in the center of a three way junction formed by the airflow passages to and from the feed valve, the exhaust valve, and the connection to the top of the column.

In operation, feed gas **914** enters the manifold **512** through the feed gas inlet **812** in the upper plate **802** and is directed through a solenoid valve **816** into the feed gas pathway **904**. The feed gas **914** flows across the recessed water trap **902** such that condensed water **906** in the feed gas **914** settles into the water trap **902** by gravity while the lighter components continue along the pathway **904** into the adsorbent bed **908**. Preferably, the water trap **902** containing the condensed water **906** is subsequently purged by gas in the waste gas pathway **910**. It will be appreciated that the integrated water trap system is not limited to the above-described embodiment. Any integrated water trap system that encompasses the general concept of forming an integrated gas flow path having a lower region where light air flows past and moisture air condenses due to gravity are contemplated to be within the scope of the invention.

FIG. **10** schematically illustrates a piloted valve system **1000** integrated in the manifold **512** for providing quick release of pressurized gas from the adsorbent columns during a PSA cycle. It is generally recognized that the efficiency of a PSA cycle benefits from fast release of the pressurized gas within the adsorbent columns during the blow down and purge steps. However, the solenoid valves controlling gas flow from the columns to the waste gas pathway are typically limited in orifice size which in turn results in restricted flow and slowed release of the gas within the columns. To increase the flow capacity, the piloted valve system **1000** shown in FIG. **10** utilizes a solenoid valve to drive a much larger piloted valve that is embedded in the manifold and controls the waste gas flow to and from the columns.

As shown in FIG. **10**, the piloted valve system **1000** generally includes a solenoid valve **1002**, an air chamber **1004** in fluid communication with the solenoid valve **1002**, and a piloted valve **1007** that can be actuated by the solenoid valve **1002** through the air chamber **1004**. The piloted valve **1007** preferably comprises a diaphragm **1006** positioned between the air chamber **1004** and a waste gas pathway **1008**. Pressure differences between the air chamber **1004** and the waste gas pathway **1008** mechanically deflect the diaphragm **1006** to open or close the waste gas pathway **1008** to gas flow. Preferably, the diaphragm **1006** has a

natural resiliency such that it is deflected away from the waste gas pathway **1008** when the air chamber **1004** is not pressurized.

In one embodiment, the diaphragm **1006** is seated in a recess **1010** that extends downwardly from an exterior surface **1012** of the upper plate **802**. An insert **1014** is mounted in the recess **1010** above the diaphragm **1006** and flush with the exterior surface **1012** of the plate **802**. The diaphragm **1006** has an outer rim **1016** that sealingly engages with an inner surface **1018** of the insert **1014** so as to form the air chamber **1004** as shown in FIG. **10**. The insert **1014** contains a plurality of openings **1020** that are in fluid communication with the air chamber **1004**. The solenoid valve **1002** is mounted above the insert **1014** and controls gas flow through the openings **1020** to the air chamber **1004**.

As also shown in FIG. **10**, the waste gas pathway **1008** is formed in the lower plate **804** of the manifold and in contact with the diaphragm **1006** through an opening **1022** formed in the inner face **808** of the upper plate **802**. To close the waste gas pathway **1008** from gas flow, the diaphragm **1006** is deflected toward a baffle **1024** positioned in the waste gas pathway **1008** and sealingly engages with the baffle **1024** so as to block off a pathway **1026** between the diaphragm and the baffle. To open the waste gas pathway **1008**, the diaphragm **1006** is deflected away from the baffle **1024** so as to allow gas to flow through the pathway **1026** and out the exhaust. It will be appreciated that the pathway **1026** controlled by the diaphragm **1006** provides a much larger flow capacity for waste gas than the orifices in the solenoid valves.

In operation, pressurized purge gas **1028** from the adsorbent column flows into the opening **1022** in the upper plate **802** and pushes the diaphragm **1006** away from the baffle **1024** so as to open the path **1026** between the diaphragm **1006** and the baffle **1024** for gas flow. After the purge gas is released through the exhaust, a portion of the feed gas is directed into the air chamber **1004** via the solenoid valve **1002** to push the diaphragm against the baffle **1024** so as to close the path **1026** therebetween. Advantageously, the piloted valve system **1000** allows waste gas to be released from the column through a much larger opening than the orifices contained in the solenoid valves and does not consume additional space as the valves are all incorporated in the manifold.

FIG. **11** provides a detailed view of the components inside the second compartment **302** of the housing **206**. As shown in FIG. **11**, the second compartment **302** generally contains an air circulation fan **1102**, a battery **1104**, and a compressor assembly **1106**. In one embodiment, the fan **1102** comprises a blower or other device used for forcing air circulation. The battery **1104** is preferably a lithium ion battery having a rated life of at least 2 hours. In certain embodiments, the battery may also comprise a fuel cell or other transportable electric power storage device. The compressor assembly **1106** includes a compressor **1108**, a driving motor **1110**, and a heat exchanger **1112**. In one embodiment, the compressor **1108** is preferably a non-reciprocating compressor such as a scroll compressor or a radial compressor and the motor **1110** is preferably a DC brushless motor. In certain embodiments, the compressor **1108** can also be a vacuum pump or a combination of a vacuum pump and a compressor. The heat exchanger **1112** can be in the form of aluminum coiled tubes or other common heat exchanger designs. In one embodiment, the heat exchanger **1112** has an inlet **1114** and an outlet **1116**. The inlet **1114** is in fluid communication with the compressor **1108** for receiving feed gas therefrom and the outlet **1116** is connected to the PSA unit for delivery of feed gas thereto.

As also shown in FIG. **11**, the compressor **1108** rests on an upper surface **1118** of the compressor mount **406**, which is elevated above the base **208** of the housing. The driving motor **1110** attached to the compressor **1108** extends into the opening **410** in the compressor mount **406** and remains suspended therein. Moreover, the heat exchanger **1112** is positioned above the compressor **1108** and under the fan **1102**. Preferably, the fan **1102** directs an air flow against the heat exchanger **1112** to facilitate cooling of the feed gas therein. As also shown in FIG. **11**, the battery **1104** is mounted on the battery bail **414** via three pairs of guide rails **1120** formed on the battery and adapted to mate with the battery bail **414**. The distance between the guide rails **1120** becomes progressively shorter from bottom to top, with the topmost pair forming the tightest fit with the bail **414**. This facilitates mounting of the battery particularly for those with impaired dexterity. When the battery **1104** is in position, the topmost guide rails are held firmly by the bail **414** while a lower section **1130** of the battery **1104** is held firmly by the mated electrical connectors formed in the battery slot **412**.

In one embodiment, a compressor restraint **1122** is connected between the compressor **1108** and the chassis **202** to secure the compressor **1108** to the housing **206**. Preferably, the compressor restraint **1122** comprises an elastic tether that fastens the compressor **1108** to the chassis. Preferably, the chassis is fit with grooves for engaging with the compressor restraint. In one embodiment, the compressor restraint **1122** comprises two elongated legs **1124***a*, **1124***b* spaced apart in the middle and joined together in an upper end **1126***a* and a lower end **1126***b*. The upper end **1126***a* is removably attached to the compressor **1108** and the lower end **1126***b* removably attached to the chassis **202**. Moreover, the elongated legs **1124***a*, **1124***b* preferably have preformed bends which extend away from each other. These bends can be pressed toward each other to straighten the legs and increase the overall length of the compressor restraint **1122** so as to facilitate mounting and removal of the compressor restraint. Preferably, the compressor restraint does not substantially exert active force on the compressor assembly when the housing is in its upright position so as to reduce vibration coupling from the compressor to the chassis.

In another embodiment, a vibration damping member **1128** is interposed between the compressor mount **406** and the compressor **1108** to further reduce transfer of vibrational energy from the compressor to the housing. As shown in FIG. **12**, the vibration damping member **1128** comprises a grommet **1202** configured to mate with the annular compressor mount so as to provide a vibration damping mounting surface for the compressor system. Preferably, the grommet **1202** is made of a resilient silicone material such as sorbothane and configured to absorb low vibrational frequencies produced by the compressor. In one embodiment, a first set of ribs **1204** are formed along the periphery of an upper surface **1206** of the grommet **1202** and configured to absorb vibration from the compressor. In another embodiment, a second plurality of ribs **1208** are formed on an inner surface **1210** of the grommet **1202** and configured to absorb vibration from the motor. The ribs **1204**, **1208** substantially reduce the amount of vibration transferred to the grommet **1202** which is in contact with the compressor mount. The compressor advantageously rests on the grommet without being pressed against the chassis during normal operations and is restrained by the compressor restraint only when the apparatus is tipped over on its side. The vibration damping

member **1128** is advantageously configured to reduce transfer of vibration energy, particularly low frequency vibration, from the compressor system to the housing, thus reducing noise created by vibration of the housing.

In addition to vibration control features, the apparatus also incorporates one or more thermal management systems to provide cooling for temperature sensitive components inside the housing and facilitate heat dissipation. FIG. **13** illustrates a thermal management system of one preferred embodiment adapted to provide cooling for the battery. A thermal sleeve **1302** is positioned around the battery **1104** to isolate air surrounding the battery **1104** from higher temperature air in the second compartment **302** of the housing. A lower end **1304** of the thermal sleeve **1302** is configured to mate with the battery slot **412** so as to close off the lower opening of the sleeve and form a compartment or air pocket for the battery. A cooling gas is preferably directed into the space between the thermal sleeve **1302** and the battery **1104** to facilitate dissipation of heat generated by the battery and also to insulate the battery from heat generated by other components in the housing.

In one embodiment, a conduit **1306** extends from the exhaust outlet **814** of the PSA unit **506** to an opening **1038** in the battery slot **412**. The conduit **1306** directs exhaust gas **1312** from the PSA unit **506** into the space between the thermal sleeve **1302** and the battery **1104**. Since the exhaust gas is typically cooler than ambient air surrounding the battery compartment, it serves as an efficient source of cooling air for the battery. The exhaust gas enters the thermal sleeve **1302** from the lower opening **1308** in the battery slot **412** and circulates out of the upper end **1310** of the thermal sleeve **1302**.

As also shown in FIG. **13**, a circuit board **1314** is mounted horizontally on the PSA unit **506**, above the valves **816** on the manifold **512**. The circuit board **1314** comprises control circuitry which governs the operation of the PSA unit, alarms, power management system, and other features of the apparatus. As described above, contacts on the circuit board **1314** are in direct electrical contact with mating contacts **516** on the valves **514** of the PSA unit **506**, which conserves space and eliminates the need for wiring connections. In one embodiment, the circuit board **1314** has small through-hole connectors that align with the location of valve pins to establish electrical interconnection.

As will be described in greater detail below, the circuit board **1314** is located in the path of a directed air flow inside the housing so as to facilitate heat dissipation of the circuits during operation. Moreover, although the control circuitry is substantially entirely within the first compartment **300**, the circuit board **1314** extends horizontally from the first compartment **300** to the second compartment **302**, substantially covering the upper openings of both compartments so as to inhibit migration of higher temperature air from the second compartment **302** into the first **300**. In one embodiment, foam material is placed between the outer edges **1316** of the circuit board **1314** and the inner walls of the housing to form an air seal which further inhibits migration of air between the compartments **300**, **302**. In another embodiment, the circuit board **1314** is shaped to mirror the cross-sectional contour of the housing so as to ensure an effective seal between the circuit board **1314** and housing.

FIG. **14** schematically illustrates a thermal management system of another preferred embodiment, which is configured to provide a continuous flow of cooling air across the components inside the housing. As shown in FIG. **14**, ambient air **1402** is drawn into the housing **206** through an air inlet **1404** by the fan **1102**. The air inlet **1404** is preferably located in a lower portion of the sidewall **212***c* adjacent the first compartment **300**. The ambient air **1402** is directed to flow through an air flow passageway **1406** generally defined by the walls of the housing and the components therein. The air flow passageway **1406** is preferably a circuitous path extending from the air inlet **1404**, through the first and second compartments **300**, **302**, to an air outlet **1408** located in a lower portion of the sidewall **212***a* adjacent the second compartment **302**. Preferably, the ambient air is directed to flow across the first compartment, which contains temperature sensitive components, before entering the second compartment which contains heat generating components. As will be described in greater detail below, the thermal management system utilizes the air circulation fan **1102** in combination with the configuration of the housing and placement of components therein to produce a one-way flow passageway for air from inlet to outlet. As such, heated air is not re-circulated back into the system and the components are cooled by a continuous stream of external air.

In one embodiment, the air flow passageway **1406** has an upstream portion **1408** and a downstream portion **1410**. The upstream portion **1408** includes a vertical path **1406***a* generally defined by the PSA unit **506** and the sidewall **212***c* of the housing **206** followed by a horizontal path **1406***b* generally defined by the circuit board **1314** and the upper wall **210**. The downstream portion **1410** includes a vertical path **1410***a* generally defined by the partition **304** and the battery **1104**, a horizontal path **1410***b* generally defined by the compressor assembly **1106** and the base **208** of the housing, and followed by another vertical path **1410***c* defined by the battery **1104** and the sidewall **212***a*. Air in the upstream portion **1408** of the passageway **1406** preferably has a lower temperature than air in the downstream portion **1420** where most heat generating components are located. Temperature sensitive components such as the valves **514** and electrical components disposed on the circuit board **1314** are advantageously disposed in the upstream portion **1408**, thereby exposing the valves and components to a continuous stream of incoming cooling air, which reduces their thermal load. Preferably, the upstream portion **1408** of the air flow passageway **1406** is thermally isolated from the downstream portion **1410** by the partition **304** and the circuit board **1314** in conjunction with a directed air flow described below.

As also shown in FIG. **14**, the fan **1102** is located in the downstream portion **1410** of the air flow passageway **1406** immediately above the compressor assembly **1106**. The fan **1102** generates a downward air stream directly against the compressor assembly **1106** to facilitate heat dissipation of the heat exchanger and compressor. The air stream flows past the compressor assembly **1106** through the downstream portion **1410** of the air passageway **1406** and exits the housing **206** through the air outlet **1408**. The fan **1102** is advantageously positioned to focus a cooling air stream directly on the heat generating components inside the housing. Moreover, portions of the air stream warmed by the compressor assembly are not re-circulated inside the housing, which substantially minimizes increases in the ambient temperature therein and improves cooling efficiency. The air stream generated by the fan **1102** creates a negative pressure in the upstream portion of the passageway **1406**, which draws ambient air through the passageway **1406** from the first compartment **300** to the second compartment **302** as shown in FIG. **14**. Although some turbulence of the air may occur downstream of the fan, the air path configuration permits substantially one way air flow along the path between the intake and the fan.

In certain embodiments, noise reduction features are also implemented in the apparatus. As shown in FIG. **14**, a series of sound absorbing baffles **1412** are positioned along the air flow pathway **1406** to reduce noise caused by the air flow inside the housing. Moreover, the air flow passageway is configured with a circuitous path so as to further abate the noise generated by the air flow. The circuitous path advantageously provides for air movement through the housing, but makes it difficult for sound to propagate or reflect off internal surfaces of the housing and make its way out of the housing.

FIG. **15** schematically illustrates the manner in which intake air **1500** is processed through the components of the apparatus. As shown in FIG. **15**, intake air **1500** is drawn through the air intake **502**, through the air filter **504** into an inlet port **1404** of the compressor **1108**. Air is preferably drawn into the compressor air intake at a flow rate of no greater than about 15 slpm so as to maintain a low noise level and low power consumption throughout the system. The air is pressurized by the compressor **1108** and delivered to the heat exchanger **1112** through the compressor outlet **1406**. The pressurized air is cooled by the heat exchanger **1112** and then supplied as feed gas to the PSA unit **506**. Feed gas is directed through the inlet port **812** of the PSA unit **506**, into adsorbent columns **508***a–b* to produce a product gas in accordance with a PSA cycle, preferably the six step/two bed cycle described above. Product gas from the adsorbent columns **508***a–b* flows into the storage column and is delivered to the patient through an outlet port **1408** in the manifold **512** connected to the storage column. Preferably, the product gas is delivered to the patient at a flow rate of between about 150 ml/minute and 750 ml/minute and having an oxygen concentration of at least 87%, more preferably between 87%–93%.

FIG. **16**A shows the apparatus as fully assembled in the form of a portable oxygen concentrator unit **1600**. The unit **1600**, including the housing and components therein, has a combined weight of preferably no more than about 10 pounds and produces a noise level of no greater than about 45 dB external to the unit. As shown in FIG. **16**A, an air scoop **1602** is integrally formed in the sidewall **212***c* of the shell **204** adjacent the air outlet **1408** to channel air flow out of the housing **206**. A similar air scoop is also formed in the sidewall adjacent the air inlet (not shown) to channel ambient air into the housing. As described above, the sidewalls **212***a, c* of the housing have a curved configuration so as to discourage users from resting the housing against the sidewall, which can block the air inlet or outlet.

As also shown in FIG. **16**A, a user interface panel **1603** containing a plurality of system controls **1604** such as flow rate and on-off switches is integrally formed in the shell **204**. In some embodiments, an I/O port **1606** is preferably formed in the user interface panel **1603**. The **110** port allows data transfer from the unit to be performed simply by using a complementary device such as a palm desktop assistant (PDA) or laptop computer. Moreover, an in-line filter system **1608** is also formed in the shell **204** to filter product flow in line prior to delivery to the patient. As will be described in detail below, the in-line filter system **1608** is integrated in the shell **206** of the unit so as to provide easy access to the filter without requiring opening of the shell.

As shown in FIG. **16**B, the in-line filter system **1608** includes an annular chamber **1610** formed in the shell **204** and a fitting **1612** that engages with the chamber **1610** from outside of the shell. The chamber **1610** has a seat portion **1613** configured to receive a disk filter **1614** and a threaded portion **1616** configured to engage with the fitting **1612**. Preferably, the chamber **1610** is molded into the shell **204** and oxygen product inside the housing is ported to the chamber. In one embodiment, the disk filter **1614**, preferably a 10 micron or finer filter, is held in compression in the seat portion **1613** of the chamber by the fitting **1612**, which threadably engages with the chamber **1610** from outside of the shell. In another embodiment, the fitting **1612** also contains a hose barb **1618** used to connect the cannula. Advantageously, the disk filter **1614** can be serviced by simply unscrewing the fitting **1612**, replacing the filter **1614**, and then re-screwing the fitting **1612** without ever having to open the housing of the unit. As shown in FIG. **16**C, the unit **1600** also includes a removable hatch **1620** that provides simplified access to the circuit board **1314** inside the housing **206** and the internal connections to the oxygen product line and power input.

FIG. **17** schematically illustrates a satellite conserver system **1700** that can be used in conjunction with the oxygen concentrator unit **1600** to deliver oxygen to users. It is generally recognized that oxygen concentrators deliver a finite rate of oxygen product which must be metered to the user through a conserving device. A conserving device is typically mounted inside the concentrator and includes a breath sensor that senses breath inhalation of the user to determine the timing and quantity of each bolus delivery. The sensitivity of the breath sensor is significant to the efficacy of the conserving device. As such, most conserving devices require that users use no longer than a 10 feet tube connected to the nasal cannula to ensure that the conserving device inside the concentrator can accurately sense the breath of the user.

The satellite conserver **1700** is configured to substantially remove the constraint imposed by the short tube requirement and allow users the freedom to move in a much larger area around the portable concentrator. As shown in FIG. **17**, the satellite conserver **1700** includes a small, lightweight conserving device **1702** for delivering oxygen rich product gas to users in metered amounts in a known manner in response to sensed breath. The conserver **1700** includes a breather sensor **1701** for sensing the user's breath and a delivery valve **1703** for delivering oxygen to the user. In one embodiment, the conserving device **1702** utilizes a breath rate algorithm that delivers a nearly constant amount of oxygen per minute, regardless of the breath rate of the patient. As such, patients who take more breaths within a given time period receive the same amount of oxygen as those who take less breaths. In another embodiment, the conserving device adjusts the bolus volume based on the flow setting rather than the breathing rate. In yet another embodiment, the conserving device **1702** can be fit with a second pressure sensor, which detects the pressure in the input line from the concentrator. The delivery valve timing can be adjusted based on the sensed pressure at the end of the input line such that a higher pressure corresponds to a shorter valve open time and a lower pressure corresponds to a longer valve open time.

As also shown in FIG. **17**, the conserving device **1702** is adapted to be worn by the user or positioned adjacent to the user so that breath sensing functions can be performed proximate to the user even if the concentrator unit is far away. Thus, the sensitivity of the breath sensor is not compromised even if the user is far way from the unit. The satellite conserver **1700** further includes flexible tubing **1704** connecting the conserving device **1702** to the hose barb fitting **1618** on the concentrator **1600**. In one embodiment, the tubing **1704** is preferably between 50 to 100 feet, which provides users a much greater radius of mobility. When the

satellite conserver **1700** is in use, the breath detector mounted inside the housing of the concentrator is disabled. As also shown in FIG. **17**, the satellite conserver can be worn on the person by a clip **1706** attached to the conserving device **1702**. The satellite conserver advantageously permits the user to move around the vicinity of the concentrator, preferably in at least a 50 to 100 feet radius, without detracting from the efficacy of the unit.

FIG. **18**A schematically illustrates a mobility cart **1800** configured to transport an oxygen concentrator unit for users traveling away from home. As shown in FIG. **18**A, the mobility cart **1800** includes a generally rectangular frame **1802** attached to a plurality of wheels **1804** so as to permit rolling movement of the frame **1802** over the ground. As also shown in FIG. **18**A, the frame **1802** has a support portion **1806** adapted for receiving an oxygen concentrator unit and a handle portion **1808** extending upwardly from the support portion **1806** for users to hold when moving the cart. The support portion **1806** preferably contains a compartment **1810** configured to seat the oxygen concentrator and at least two slots **1812** configured to seat and secure spare batteries. In one embodiment, a battery bail **1814** is placed in each slot **1812** for securing the batteries in the manner described above. In another embodiment, a small recess **1816** is formed in the back of the compartment **1810** for holding the satellite conserver, spare cannulas or filter.

As also shown in FIG. **18**A, the mobility cart **1800** further includes an on-board power supply **1818** that is attached to the frame **1802** portion. Preferably, the power supply **1818** has an AC power input and is adapted to power charging terminals fitted in each battery slot **1812** and a terminal fitted in the compartment for charging the battery within the concentrator. In one embodiment, the cart also has an adapter plug **1820** that extends from the power supply **1818** and mates with the concentrator's DC power input jack. The power supply **1818** is preferably sufficient to power both battery chargers while simultaneously powering the concentrator unit and charging the battery mounted inside the unit. Each battery preferably has a rated life of at least 2 hours so that the user is able to enjoy continuous use of the concentrator unit for at least six hours without an external power source. In one embodiment, the power supply is cooled by a fan mounted on the frame portion **1802**. In another embodiment, the frame portion has recesses through which water may drain out without damaging the parts. The cart **1800** can further comprise an integrated power cord and/or retractable power cord that is adapted to be plugged into a wall.

FIG. **18**B illustrates the manner in which the oxygen concentrator **1600** and spare batteries **1822** are positioned in the mobility cart. As also shown in FIG. **18**B, the handle **1808** has two telescoping rails that can be extended and retracted. When the handle **1808** is in the fully retracted position as shown in FIG. **18**B, the mobility cart **1800** preferably has a height of about 14–18 inches and can be stored in a small area such as under an airplane seat. In one embodiment, the mobility cart is structured such that the concentrator, when sitting in the cart, interfaces closely with seals positioned on the frame of the cart at the air intake and exhaust ports. As such, airflow coming into or out of the concentrator actually travels through the frame in some manner, adding extra sound attenuation by increasing the tortuosity of the flow path. Moreover, an auxiliary fan or blower mounted in the cart can also be used to circulate this air further. Advantageously, the mobility cart has integrated battery chargers and power supply incorporated in one unit so as to obviate the need for users to pack power supplies or external chargers when traveling with their concentrator. Moreover, the cart provides a single compact unit in which all oxygen concentrator related parts can be transported, which allows users greater ease of mobility when traveling.

Although the foregoing description of certain preferred embodiments of the present invention has shown, described and pointed out the fundamental novel features of the invention, it will be understood that various omissions, substitutions, and changes in the form of the detail of the system, apparatus, and methods as illustrated as well as the uses thereof, may be made by those skilled in the art, without departing from the spirit of the invention. Consequently, the scope of the present invention should not be limited to the foregoing discussions.

What is claimed is:

1. A portable gas fractionalization apparatus, comprising:
plural adsorbent bed columns mounted side by side;
an integrated fluid flow manifold mounted on one end of said columns and comprised of a plurality of integrated flow passages and a plurality of valves which control flow of fluid through said integrated flow passages to and from the columns; and
a circuit board comprising circuitry which controls said valves, said manifold disposed between the circuit board and the one end of the columns.

2. The apparatus of claim **1**, wherein contacts on the circuit board are in direct electrical contact with mating contacts on the valves.

3. The apparatus of claim **1**, wherein said adsorbent columns comprise one or more feed tubes configured to direct fluid to flow from flow passages in the integrated manifold mounted on one end of the columns to an opening in the other end of the columns.

4. The apparatus of claim **1**, wherein said integrated manifold comprises an upper plate and a lower plate, said plates comprising a plastic material.

5. A portable gas fractionalization apparatus, comprising:
plural adsorbent bed columns mounted side by side; and
an integrated fluid flow manifold mounted on one end of said columns and comprised of a plurality of integrated flow passages and a plurality of valves which control flow of fluid through said integrated flow passages to and from the columns, wherein said integrated fluid flow manifold comprises at least one piloted valve.

6. A portable gas fractionalization apparatus, comprising:
plural adsorbent bed columns mounted side by side; and
an integrated fluid flow manifold mounted on one end of said columns and comprised of a plurality of integrated flow passages and a plurality of valves which control flow of fluid through said integrated flow passages to and from the columns, wherein said integrated fluid flow manifold has a gravity water trap positioned therein.

7. A portable gas fractionalization apparatus, comprising:
a compressor which produces a feed gas;
plural adsorbent beds connected to receive the feed gas from the compressor via a fluid pathway, said beds providing a purified gas and a waste gas from said feed gas, said waste gas expelled from said beds via a waste gas pathway; and
a water trap which traps water condensed in said fluid pathway to prevent said water from reaching said beds, said water located in said waste gas pathway such that said expelled waste gas carries the water away from the beds.

8. The apparatus of claim **7**, wherein, said water trap is positioned at a lower elevation relative to said fluid pathway,

wherein gravity causes said condensed water in the fluid pathway to flow into said water trap located at the lower elevation.

9. The apparatus of claim **8**, wherein said water trap is positioned in a laminated manifold.

10. The apparatus of claim **9**, wherein said water trap is positioned in the center of a three way junction formed by airflow pathways to and from a feed valve, an exhaust valve, and a connection to at least one of the plural adsorbent beds.

11. A portable gas fractionalization apparatus, comprising:

a housing;

a compressor mount having an upper surface and an opening defined by said upper surface;

a compressor assembly mounted in the housing on said compressor mount, wherein a first portion of the compressor assembly rests on the upper surface of the compressor mount and a second portion of the compressor assembly extends into the opening and remains suspended therein.

12. The apparatus of claim **11**, further comprising a vibration damping member interposed between the compressor mount and the compressor, wherein said vibration damping member comprise a grommet having a plurality of ribs formed thereon.

13. The apparatus of claim **12**, further comprising a compressor restraint connected between the compressor and the housing and sufficiently elastically yieldable to non-rigidly fasten the compressor to the housing, wherein said compressor restraint does not substantially exert active force on the compressor assembly when the housing is in its upright position so that the second portion of the compressor assembly remains suspended in the opening of the compressor mount so as to reduce vibration coupling from the compressor to the housing.

14. The apparatus of claim **13**, wherein the compressor restraint comprises an elastic tether having elongated legs configured with preformed bends which extend away from each other, said bends can be pressed toward each other to straighten the legs and increase the overall length of the compressor restraint so as to facilitate mounting and removal of the compressor restraint.

15. An adsorbent bed column, comprising:

an elongated housing;

plural adsorbents positioned inside the housing; and

a first filter comprised of a fit positioned proximate one end of the housing adjacent at least one adsorbent, wherein the column further comprising a wave spring positioned against an exterior surface of the first filter so as to apply a substantially even pressure over the first filter.

* * * * *

UNITED STATES PATENT AND TRADEMARK OFFICE

CERTIFICATE OF CORRECTION

PATENT NO. : 7,135,059 B2
APPLICATION NO. : 10/681456
DATED : November 14, 2006
INVENTOR(S) : Deane et al.

It is certified that error appears in the above-identified patent and that said Letters Patent is hereby corrected as shown below:

Column 20, line 66, in Claim 8, after "wherein" delete ",".

Column 22, line 20, in Claim 15, delete "fit" and insert -- frit --, therefor.

Signed and Sealed this

Twenty-fourth Day of April, 2007

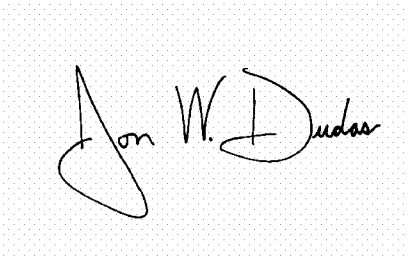

JON W. DUDAS
Director of the United States Patent and Trademark Office