US007438745B2

(12) **United States Patent**
Deane et al.

(10) **Patent No.: US 7,438,745 B2**
(45) **Date of Patent: Oct. 21, 2008**

(54) **PORTABLE GAS FRACTIONALIZATION SYSTEM**

(75) Inventors: **Geoffrey Frank Deane**, Bellevue, WA (US); **Brenton Alan Taylor**, Kenwood, CA (US); **Chung Ming Li**, Goleta, CA (US)

(73) Assignee: **Inogen, Inc.**, Goleta, CA (US)

(*) Notice: Subject to any disclaimer, the term of this patent is extended or adjusted under 35 U.S.C. 154(b) by 442 days.

(21) Appl. No.: **10/962,194**

(22) Filed: **Oct. 7, 2004**

(65) **Prior Publication Data**

US 2005/0103341 A1 May 19, 2005

Related U.S. Application Data

(63) Continuation-in-part of application No. 10/680,997, filed on Oct. 7, 2003, now Pat. No. 7,066,985, and a continuation-in-part of application No. 10/681,456, filed on Oct. 7, 2003, now Pat. No. 7,135,059, and a continuation-in-part of application No. 10/680,885, filed on Oct. 7, 2003, and a continuation-in-part of application No. 10/681,487, filed on Oct. 7, 2003.

(51) **Int. Cl.**
B01D 53/02 (2006.01)

(52) **U.S. Cl.** **95/96**; 128/204.16; 128/204.21; 128/205.24

(58) **Field of Classification Search** 95/96; 128/204.18, 204.21, 205.24
See application file for complete search history.

(56) **References Cited**

U.S. PATENT DOCUMENTS

2,195,565	A	4/1940	Fricke
2,728,407	A	12/1955	Squier
2,798,718	A	7/1957	Gross
2,944,627	A	7/1960	Skarstrom
3,258,899	A	7/1966	Coffin
3,323,292	A	6/1967	Brown
3,406,501	A	10/1968	Watkins
3,703,068	A	11/1972	Wagner
3,730,158	A	5/1973	St. Amand
3,880,616	A	4/1975	Myers et al.

(Continued)

FOREIGN PATENT DOCUMENTS

EP	0 848 981 A1	6/1998

(Continued)

Primary Examiner—Robert A. Hopkins
(74) *Attorney, Agent, or Firm*—Knobbe, Martens, Olson & Bear LLP

(57) **ABSTRACT**

A portable gas fractionalization apparatus that provides oxygen rich air to patients is provided. The apparatus is compact, lightweight, and low-noise. The components are assembled in a housing that is divided into two compartments. One compartment is maintained at a lower temperature than the other compartment. The lower temperature compartment is configured for mounting components that can be damaged by heat. The higher temperature compartment is configured for mounting heat generating components. An air stream is directed to flow from an ambient air inlet to an air outlet constantly so that there is always a fresh source of cooling air. The apparatus utilizes a PSA unit to produce an oxygen enriched product. The PSA unit incorporates a novel single ended column design in which all flow paths and valves can be co-located on a single integrated manifold. The apparatus also can be used in conjunction with a satellite conserver and a mobility cart.

3 Claims, 28 Drawing Sheets

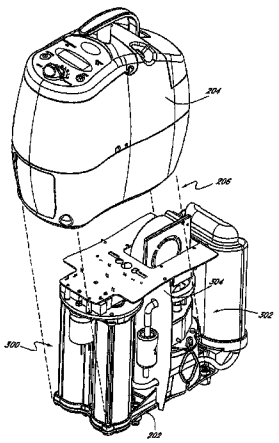

U.S. PATENT DOCUMENTS

3,922,149	A	11/1975	Ruder et al.
3,976,050	A	8/1976	Glasser et al.
4,054,133	A	10/1977	Meyers
4,070,164	A	1/1978	Miwa et al.
4,077,779	A	3/1978	Sircar et al.
4,146,277	A	3/1979	Santoro
4,222,750	A	9/1980	Gauthier et al.
4,247,311	A	1/1981	Seibert et al.
4,302,224	A	11/1981	McCombs et al.
4,303,419	A	12/1981	Frank et al.
4,342,573	A	8/1982	McCombs et al.
4,371,384	A	2/1983	McCombs
4,373,938	A	2/1983	McCombs
4,378,982	A	4/1983	McCombs
4,381,002	A	4/1983	Mon
4,428,372	A	1/1984	Beysel et al.
4,449,990	A	5/1984	Tedford, Jr.
4,462,398	A	7/1984	Durkan et al.
4,482,361	A	11/1984	Whysall
4,491,459	A	1/1985	Pinkerton
4,496,376	A	1/1985	Hradek
4,502,873	A	3/1985	Mottram et al.
4,509,959	A	4/1985	McCombs
4,511,377	A	4/1985	McCombs
4,516,424	A	5/1985	Rowland
4,534,346	A	8/1985	Schlaechter
4,545,790	A	10/1985	Miller et al.
4,584,996	A	4/1986	Blum
4,681,099	A	7/1987	Sato et al.
4,686,974	A	8/1987	Sato et al.
4,698,075	A	10/1987	Dechene
4,706,664	A	11/1987	Snook et al.
4,744,803	A	5/1988	Knaebel
4,770,678	A	9/1988	Haslett, Jr.
4,783,205	A	11/1988	Searle
4,802,899	A	2/1989	Vrana et al.
4,826,510	A	5/1989	McCombs
4,877,429	A	10/1989	Hunter
4,892,566	A	1/1990	Bansal et al.
4,895,808	A	1/1990	Romer
4,925,464	A	5/1990	Rabenau et al.
4,971,609	A	11/1990	Pawlos
5,002,591	A	3/1991	Stanford
5,004,485	A	4/1991	Hamlin et al.
5,005,570	A	4/1991	Perkins
5,032,150	A	7/1991	Knaebel
5,071,453	A	12/1991	Hradek et al.
5,112,367	A	5/1992	Hill
5,114,441	A	5/1992	Kanner et al.
5,144,945	A	9/1992	Nishino et al.
5,154,737	A	10/1992	Jenkins et al.
5,226,933	A	7/1993	Knaebel et al.
5,268,021	A	12/1993	Hill et al.
5,275,642	A	1/1994	Bassine
5,366,541	A	11/1994	Hill et al.
5,427,609	A	6/1995	Zoglman et al.
5,466,134	A	11/1995	Shaffer et al.
5,474,595	A	12/1995	McCombs
5,495,848	A	3/1996	Aylsworth et al.
5,496,388	A	3/1996	Tellier
5,531,807	A	7/1996	McCombs
5,549,736	A	8/1996	Coffield et al.
5,558,086	A	9/1996	Smith et al.
5,578,115	A	11/1996	Cole
5,593,478	A	1/1997	Hill et al.
5,603,315	A	2/1997	Sasso, Jr.
5,611,845	A	3/1997	Delp, II
5,626,131	A	5/1997	Chua et al.
5,630,411	A	5/1997	Holscher
5,632,612	A	5/1997	Shaffer
5,658,371	A	8/1997	Smolarek et al.
5,665,316	A	9/1997	Salonia et al.
5,697,364	A	12/1997	Chua et al.
5,730,778	A	3/1998	Hill et al.
5,735,268	A	4/1998	Chua et al.
5,746,806	A	5/1998	Aylsworth et al.
5,752,816	A	5/1998	Shaffer
5,755,224	A	5/1998	Good et al.
5,759,020	A	6/1998	Shaffer
5,827,358	A	10/1998	Kulish et al.
5,839,434	A	11/1998	Enterline
5,865,174	A	2/1999	Kloeppel
5,871,564	A	2/1999	McCombs
5,881,725	A	3/1999	Hoffman et al.
5,890,490	A	4/1999	Aylsworth et al.
5,906,672	A	5/1999	Michaels et al.
5,912,426	A	6/1999	Smolarek et al.
5,917,135	A	6/1999	Michaels et al.
5,928,189	A	7/1999	Phillips et al.
5,968,236	A	10/1999	Bassine
5,979,440	A	11/1999	Honkonen et al.
5,997,617	A	12/1999	Czabala et al.
6,033,457	A	3/2000	Lawless
6,036,754	A	3/2000	Rowe
6,050,792	A	4/2000	Shaffer
6,068,680	A	5/2000	Kulish et al.
6,077,331	A	6/2000	Phillips
6,129,530	A	10/2000	Shaffer
6,146,447	A	11/2000	Sircar et al.
6,152,134	A	11/2000	Webber et al.
6,176,897	B1	1/2001	Keefer
6,178,772	B1	1/2001	Incorvia
6,186,142	B1	2/2001	Schmidt et al.
6,190,441	B1	2/2001	Czabala et al.
6,192,884	B1	2/2001	Vann et al.
6,220,244	B1	4/2001	McLaughlin
6,269,811	B1	8/2001	Duff et al.
6,299,670	B1	10/2001	Applegarth
6,311,719	B1	11/2001	Hill et al.
6,342,090	B1	1/2002	Cao
6,346,139	B1	2/2002	Czabala
6,348,082	B1	2/2002	Murdoch et al.
6,371,114	B1	4/2002	Schmidt et al.
6,372,026	B1	4/2002	Takemasa et al.
6,394,088	B1	5/2002	Frye et al.
6,395,065	B1	5/2002	Murdoch et al.
6,427,690	B1	8/2002	McCombs et al.
6,439,864	B1	8/2002	Shaffer
6,457,485	B2	10/2002	Hill et al.
6,478,850	B1	11/2002	Warren
6,497,755	B2	12/2002	Murdoch et al.
6,511,308	B2	1/2003	Shaffer
6,520,176	B1	2/2003	Dubois et al.
6,532,957	B2	3/2003	Berthon-Jones
6,532,958	B1	3/2003	Buan et al.
6,551,384	B1	4/2003	Ackley et al.
6,558,451	B2	5/2003	McCombs
6,581,297	B1	6/2003	Ginder
6,609,582	B1	8/2003	Botti et al.
6,629,525	B2	10/2003	Hill et al.
6,651,658	B1	11/2003	Hill et al.
6,712,877	B2	3/2004	Cao et al.
6,712,886	B2	3/2004	Kim
6,764,534	B2	7/2004	McCombs
6,805,122	B2	10/2004	Richey et al.
6,805,729	B2	10/2004	Lim et al.
6,811,590	B2	11/2004	Lee et al.
6,848,444	B2	2/2005	Smith et al.
6,866,041	B2	3/2005	Hardy et al.
7,135,059	B2	11/2006	Deane et al.
2002/0053286	A1	5/2002	Czabala
2002/0121191	A1	9/2002	Warren
2003/0005928	A1	1/2003	Appel et al.
2003/0024531	A1	2/2003	Ball

2003/0167924	A1	9/2003	McCombs et al.
2003/0192431	A1	10/2003	Lee et al.
2004/0020366	A1	2/2004	Walker et al.
2004/0074496	A1	4/2004	Hayashi et al.
2004/0149133	A1	8/2004	McCombs et al.
2005/0072298	A1	4/2005	Deane et al.
2005/0072306	A1	4/2005	Deane et al.
2005/0072423	A1	4/2005	Deane et al.
2005/0072426	A1	4/2005	Deane et al.
2008/0087170	A1	4/2008	Deane et al.

FOREIGN PATENT DOCUMENTS

EP	0 988 882	A3	3/2000
JP	2002 231321		8/2002
WO	WO 01/41900	A2	6/2001
WO	WO 01/41900	A2	8/2001

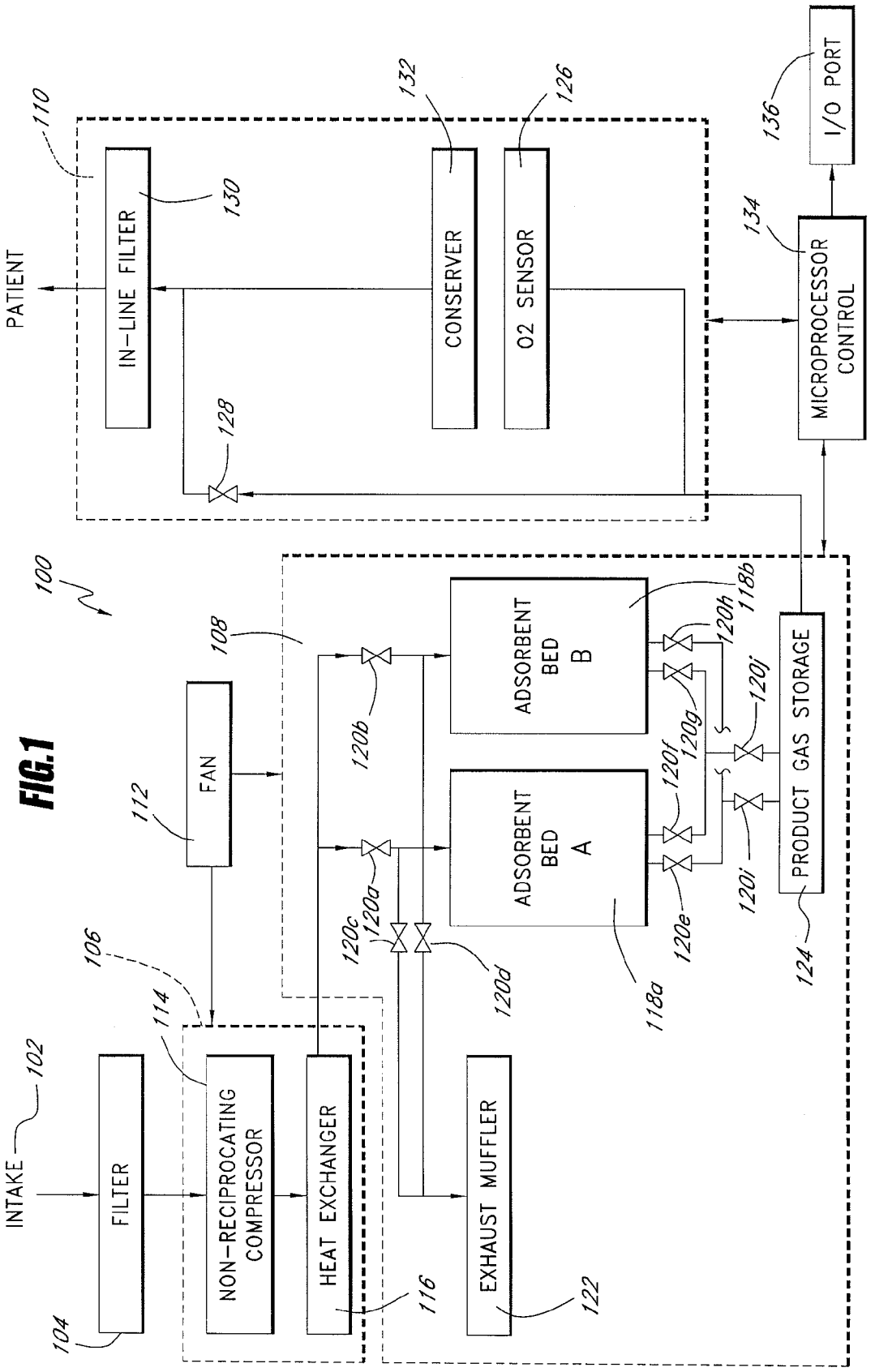
PATIENT
IN-LINE FILTER
CONSERVER
O2 SENSOR
MICROPROCESSOR CONTROL
I/O PORT
INTAKE
FILTER
NON-RECIPROCATING COMPRESSOR
HEAT EXCHANGER
FAN
EXHAUST MUFFLER
ADSORBENT BED A
ADSORBENT BED B
PRODUCT GAS STORAGE
100
102
104
106
108
110
112
114
116
118a
118b
120a
120b
120c
120d
120e
120f
120g
120h
120i
120j
122
124
126
128
130
132
134
136

FIG.1

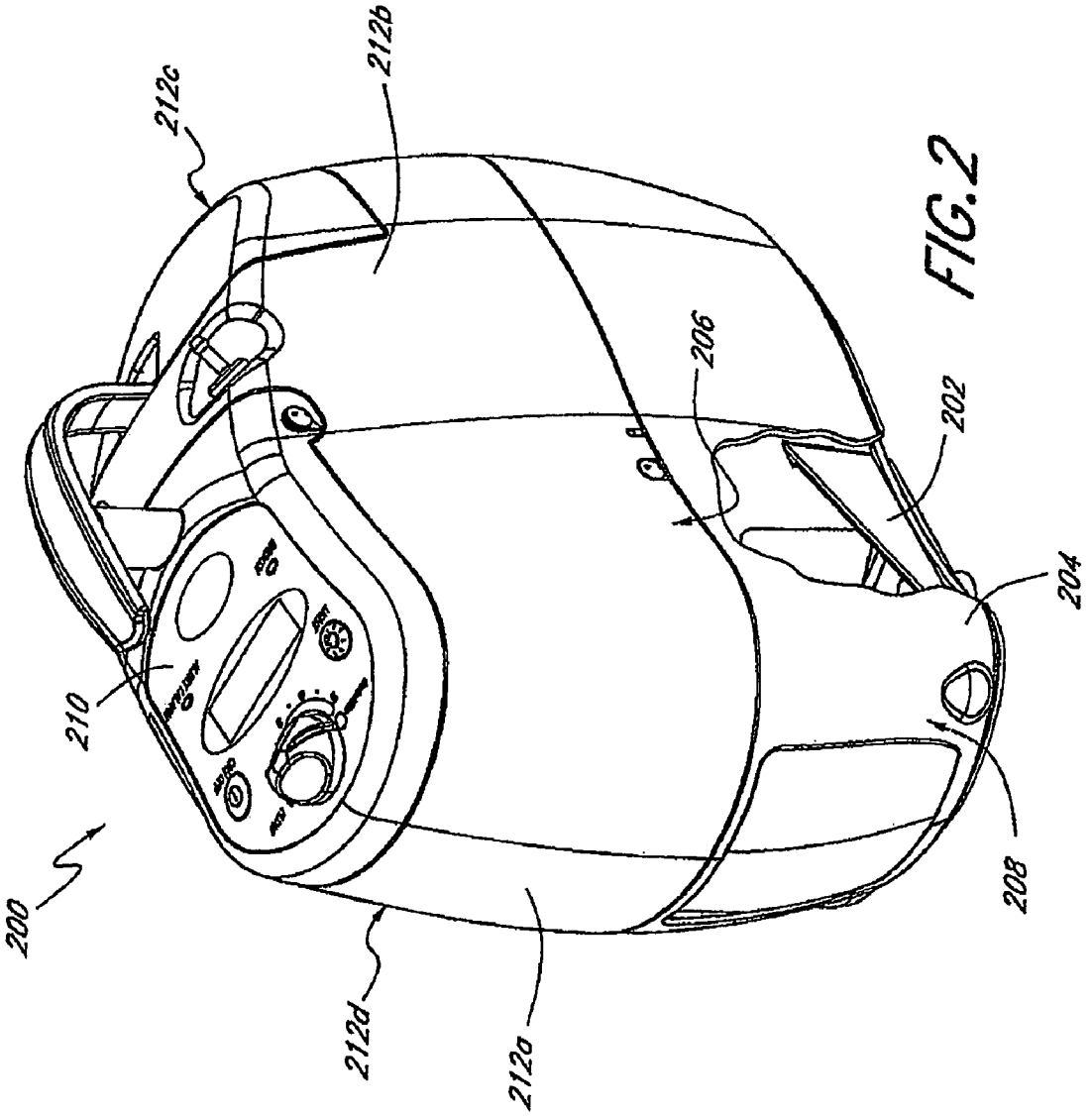

FIG. 2

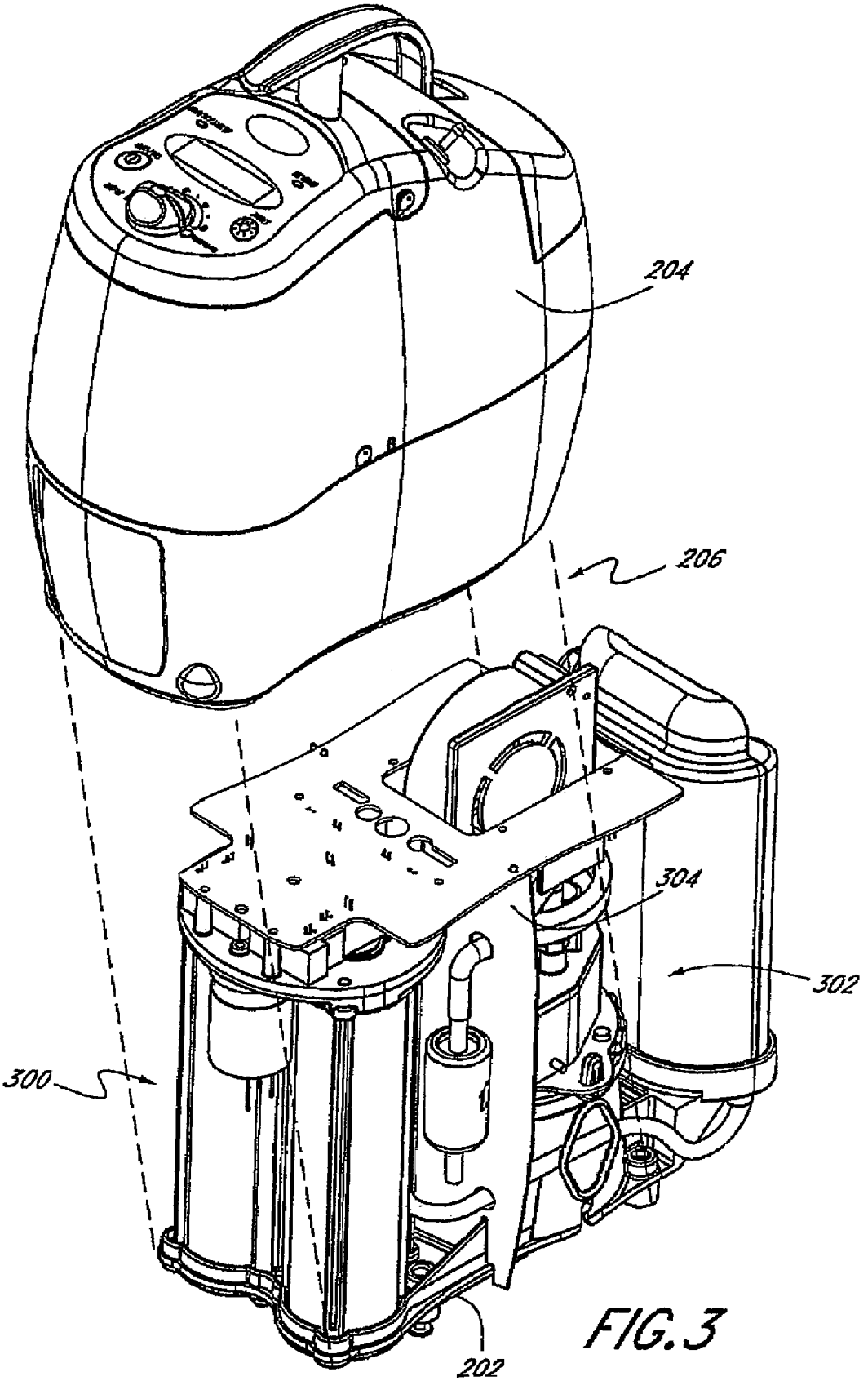

FIG. 3

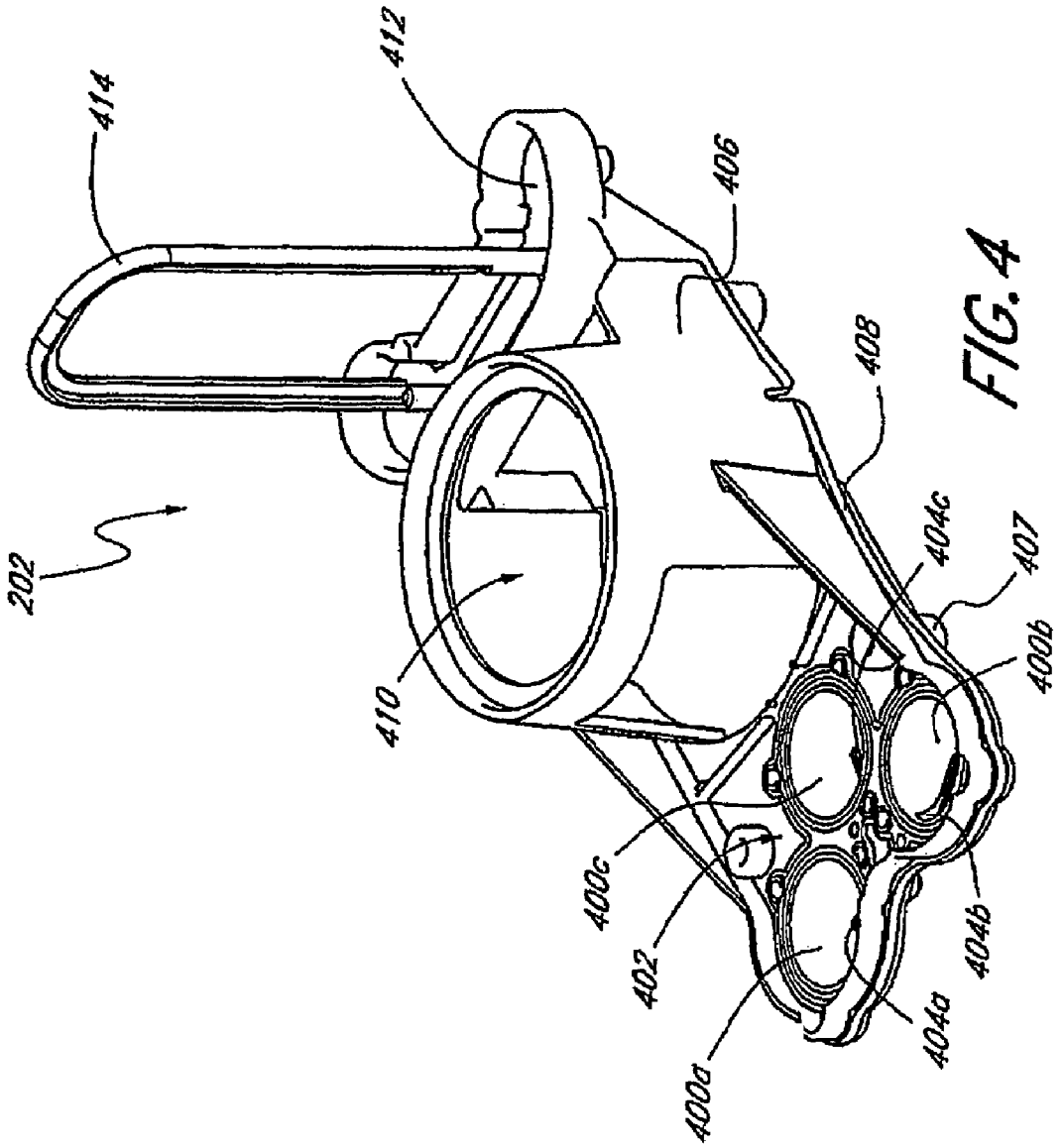

FIG. 4

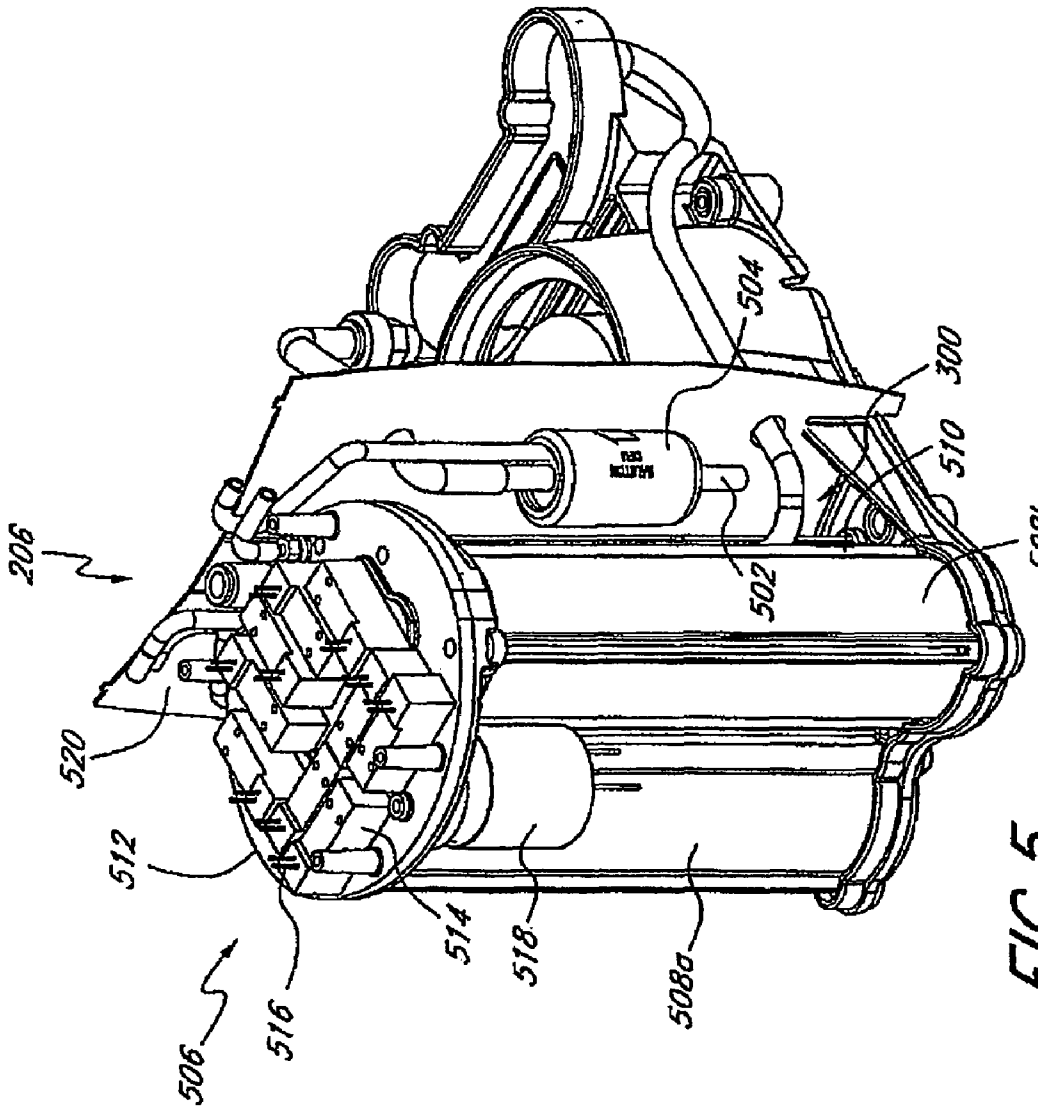

FIG. 5

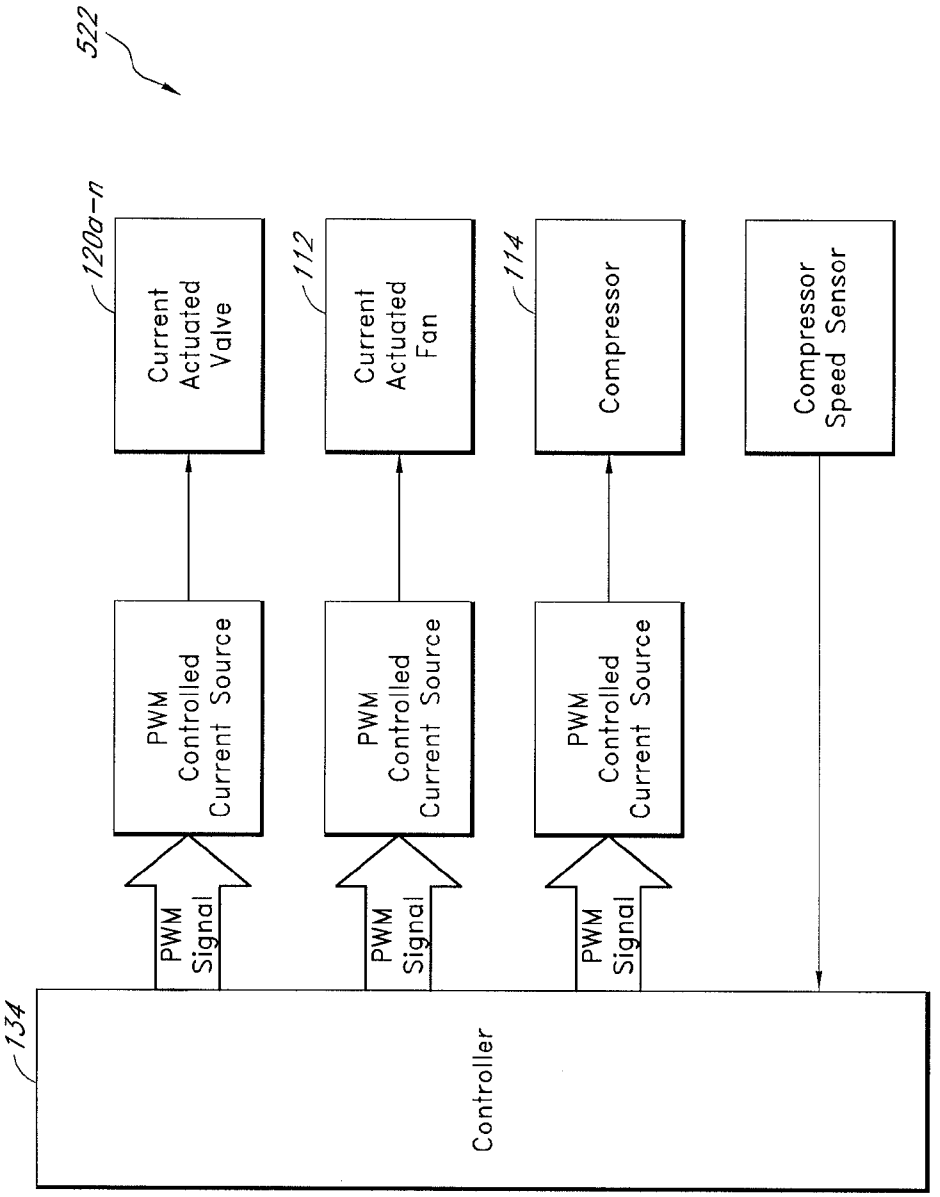
522
120a-n
Current Actuated Valve
112
Current Actuated Fan
114
Compressor
Compressor Speed Sensor
PWM Controlled Current Source
PWM Controlled Current Source
PWM Controlled Current Source
PWM Signal
PWM Signal
PWM Signal
134
Controller

FIG. 5A

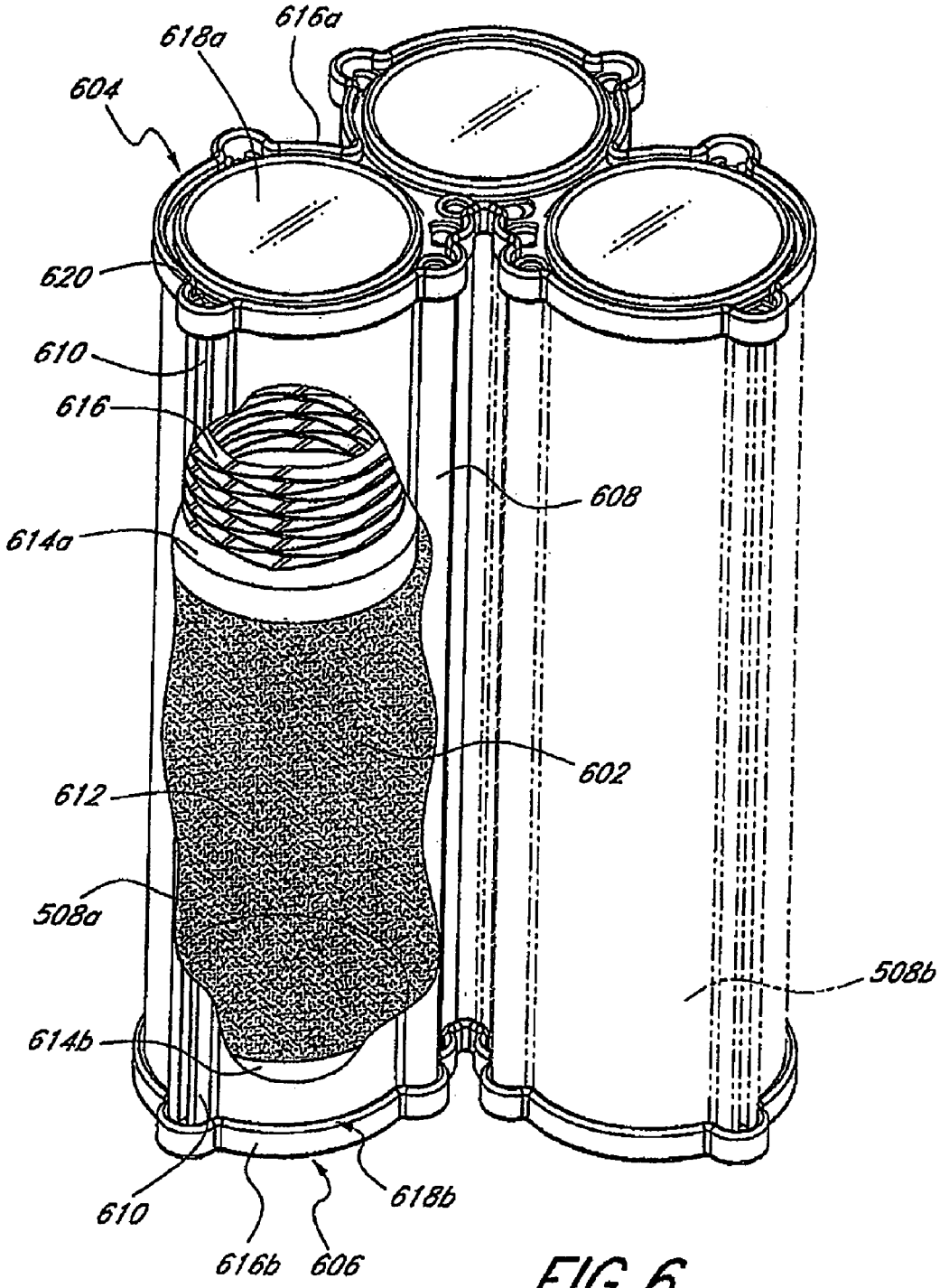
618a
616a
604
620
610
616
608
614a
602
612
508a
508b
614b
610
618b
616b
606

FIG. 6

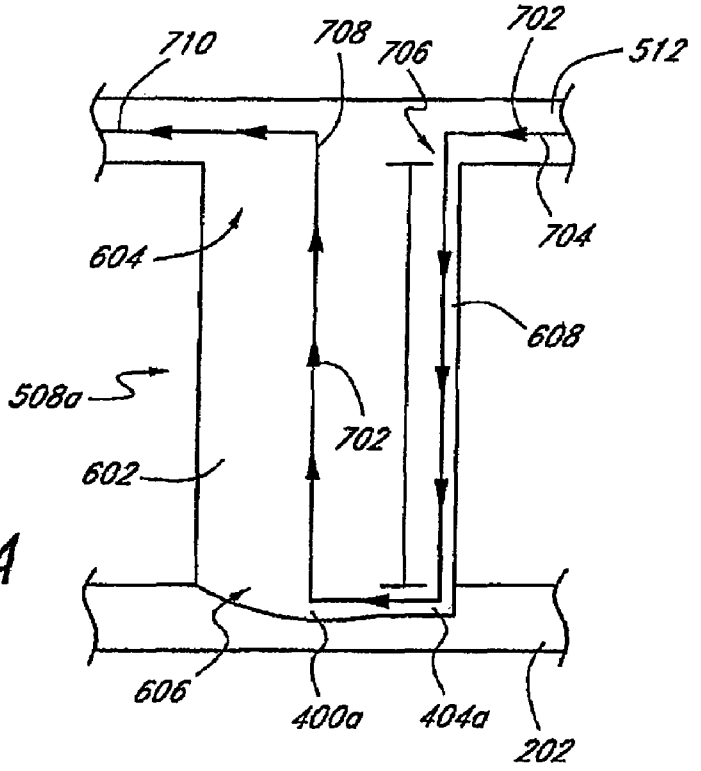
710
708
706
702
512
704
604
608
508a
702
602
606
400a
404a
202

FIG. 7A

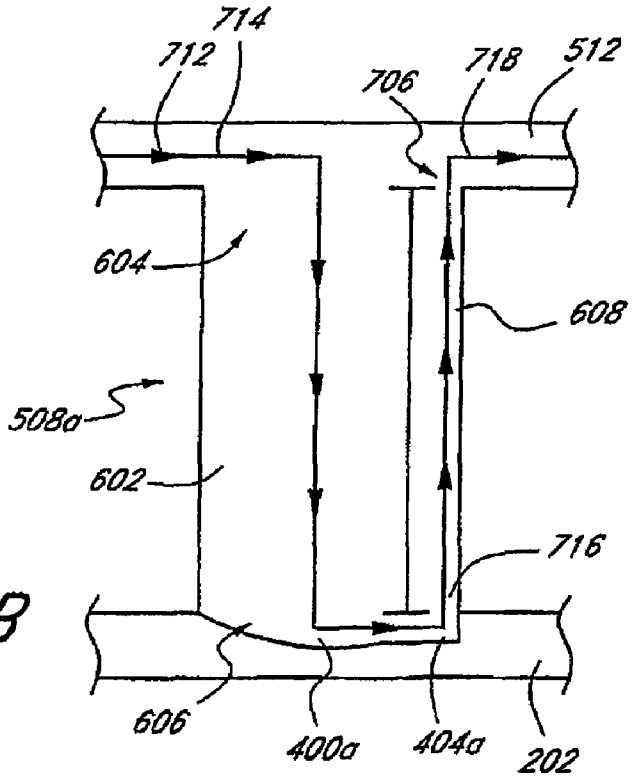
714
712
706
718
512
604
608
508a
602
716
606
400a
404a
202

FIG. 7B

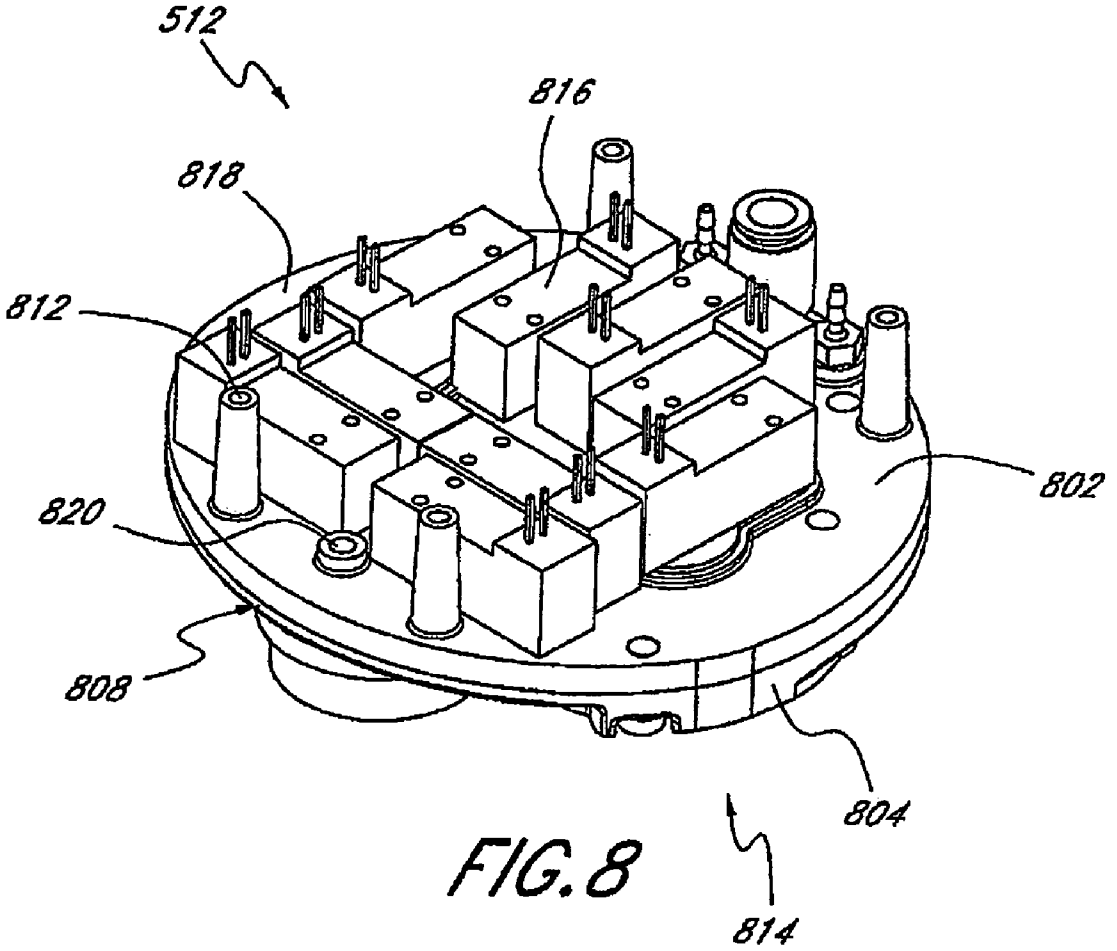

FIG. 8

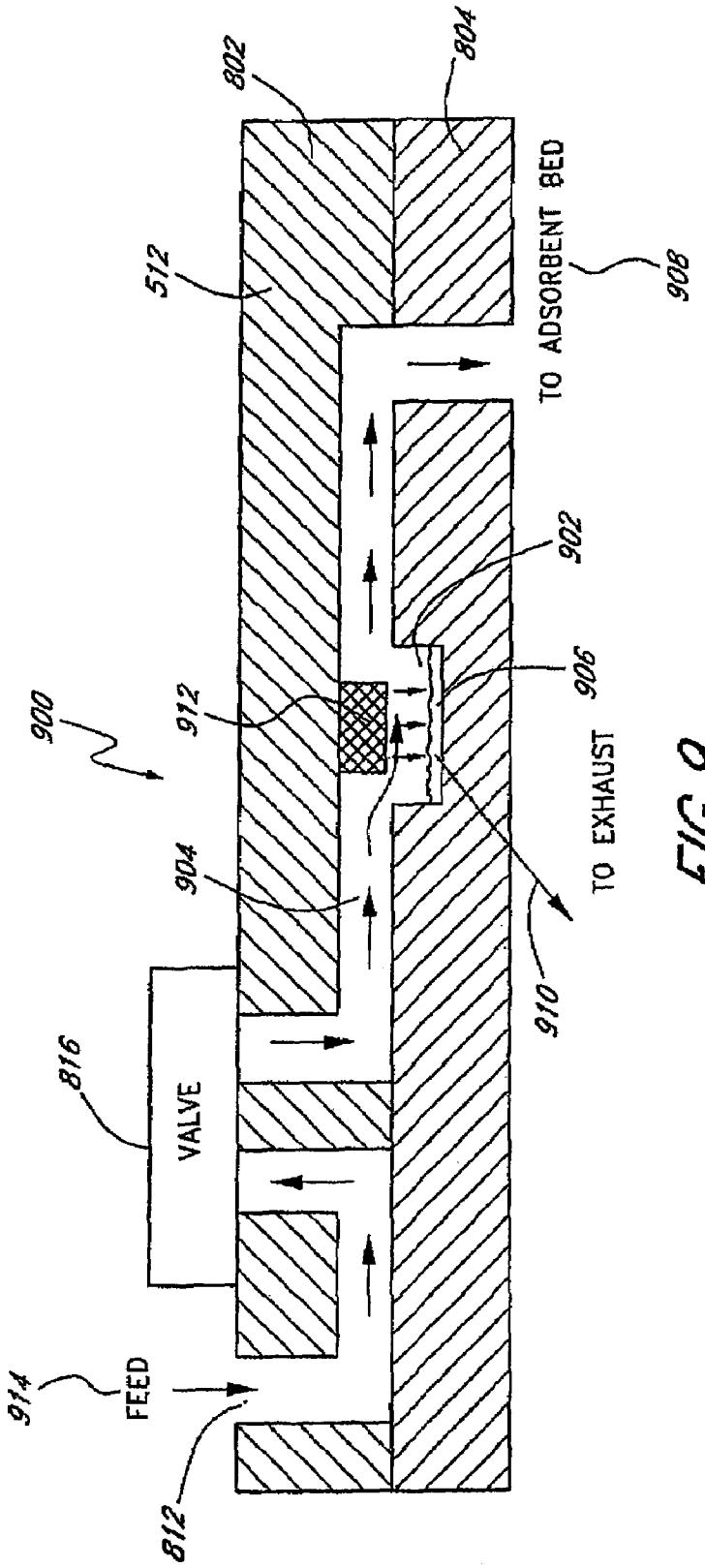
802
804
512
TO ADSORBENT BED
908
902
906
900
912
904
TO EXHAUST
910
816
VALVE
914
FEED
812

FIG. 9

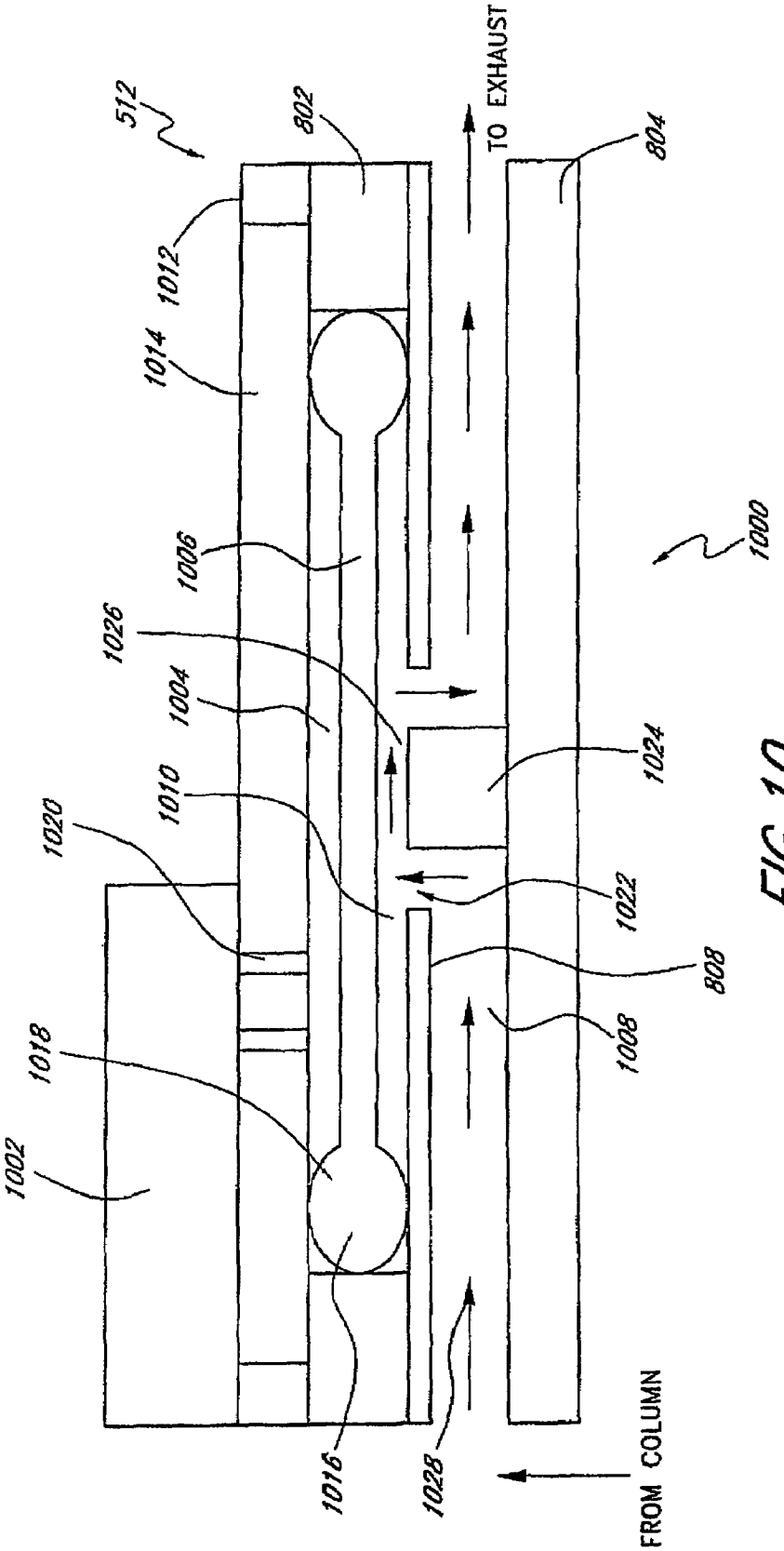
512
802
TO EXHAUST
804
1012
1014
1006
1000
1026
1004
1024
1010
1020
1022
808
1018
1008
1002
1016
1028
FROM COLUMN

FIG. 10

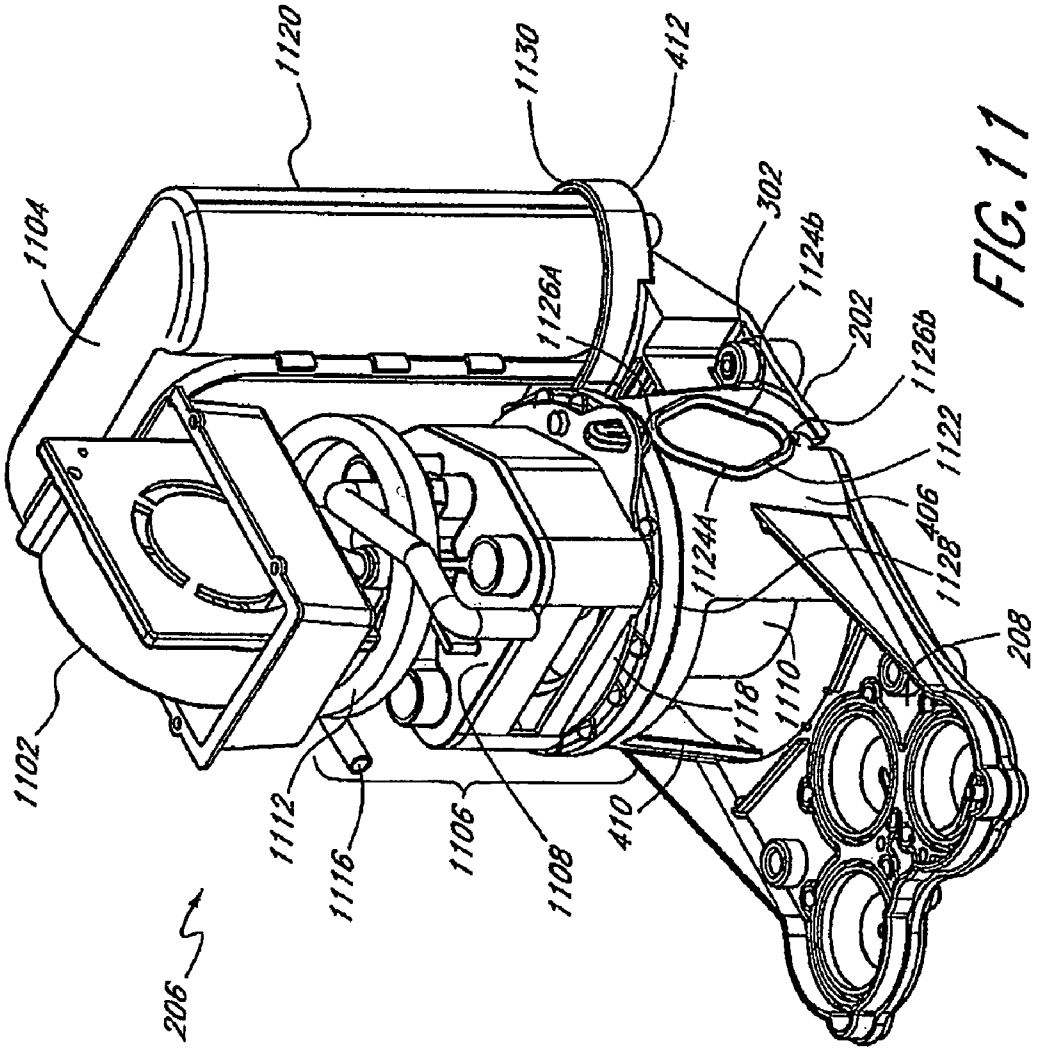
1104
1120
1130
412
302
1124b
202
1126b
1122
406
1128
208
1126A
1124A
1110
1118
1102
1112
1116
1106
1108
410
206

FIG. 11

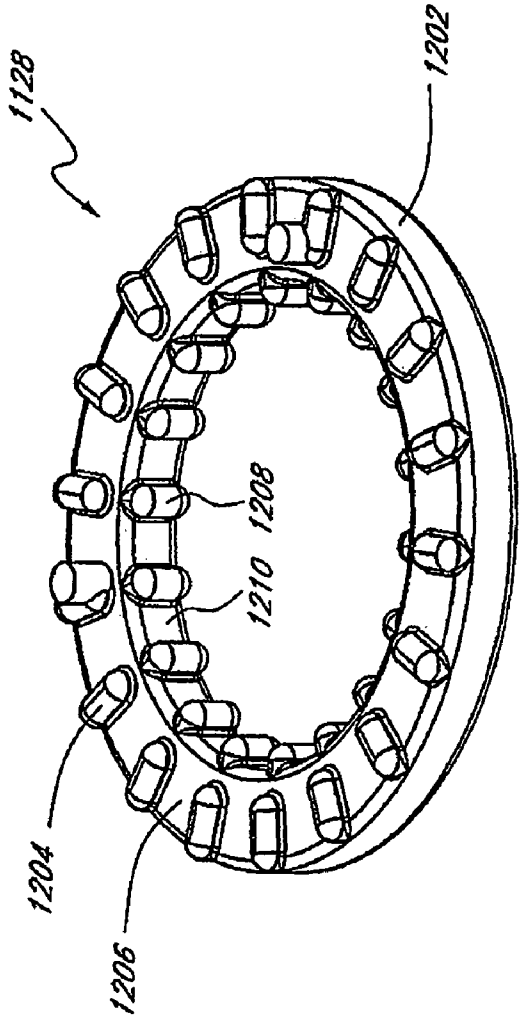

FIG. 12

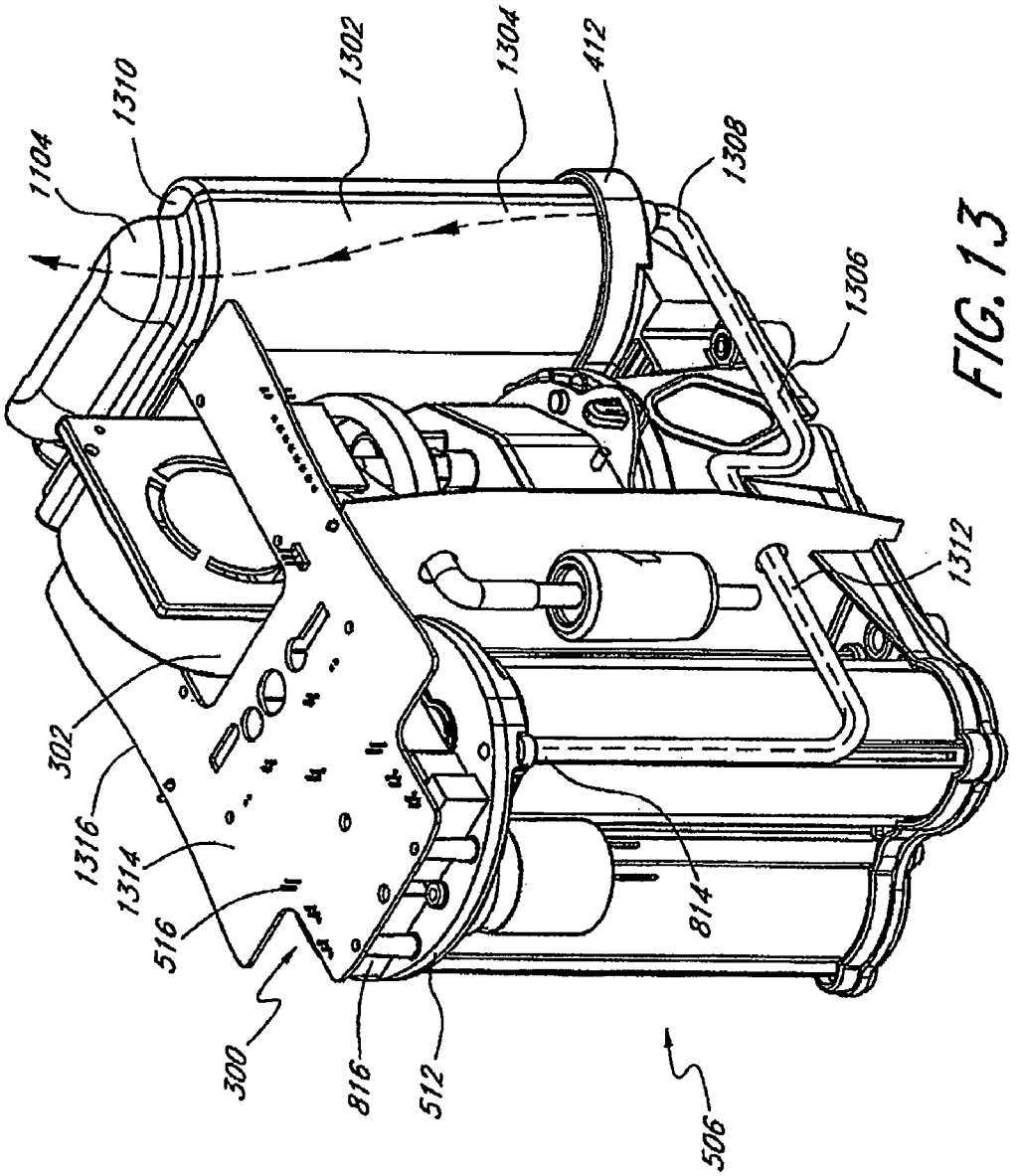
1104
1310
1302
1304
412
1308
1306
1312
302
1316
1314
516
300
816
512
814
506

FIG. 13

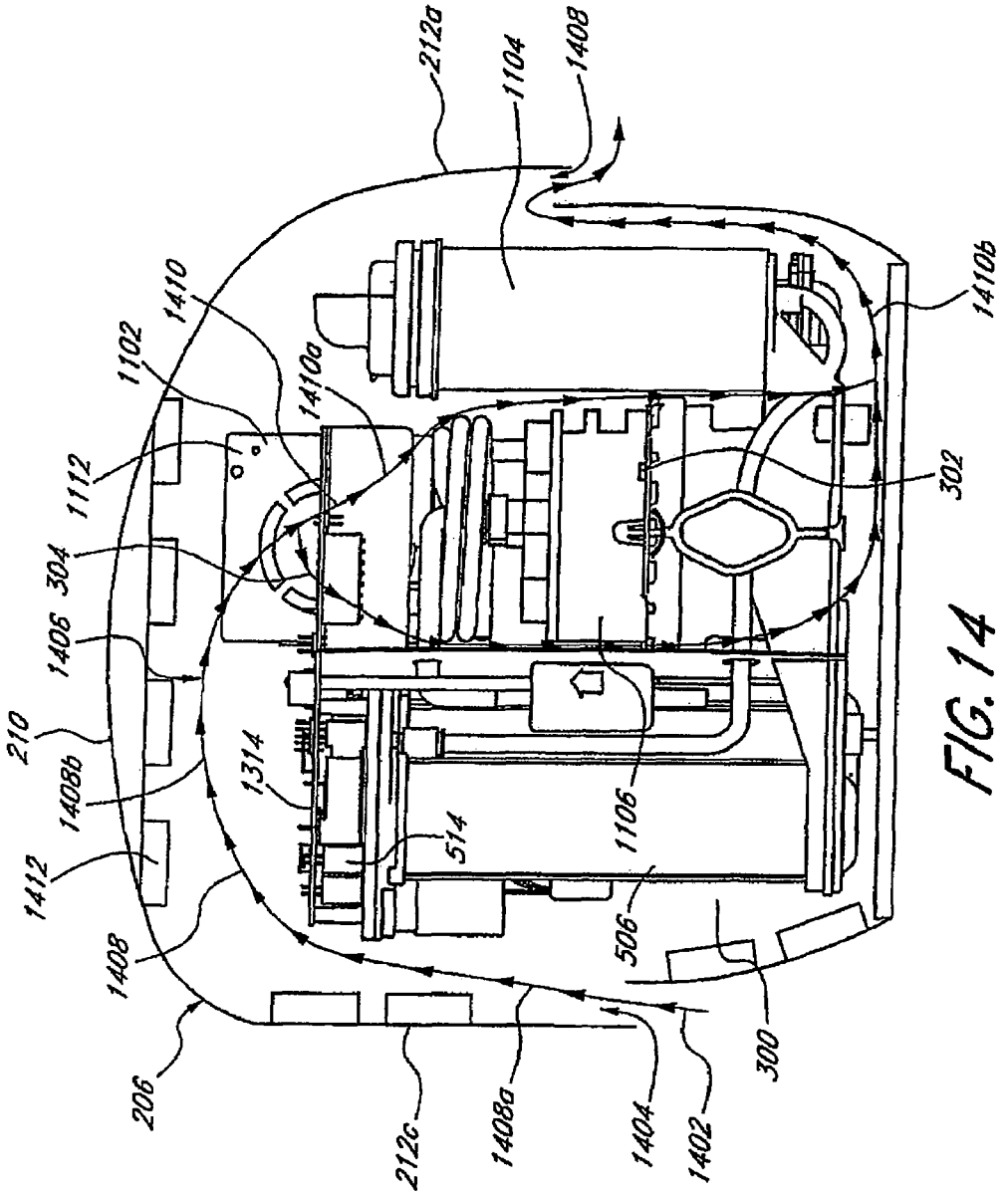
212a
1104
1408
1410
1102
1410a
1112
304
1406
210
1408b
1412
1408
206
212c
1408a
1404
1402
300
506
1106
514
1314
302
1410b

FIG. 14

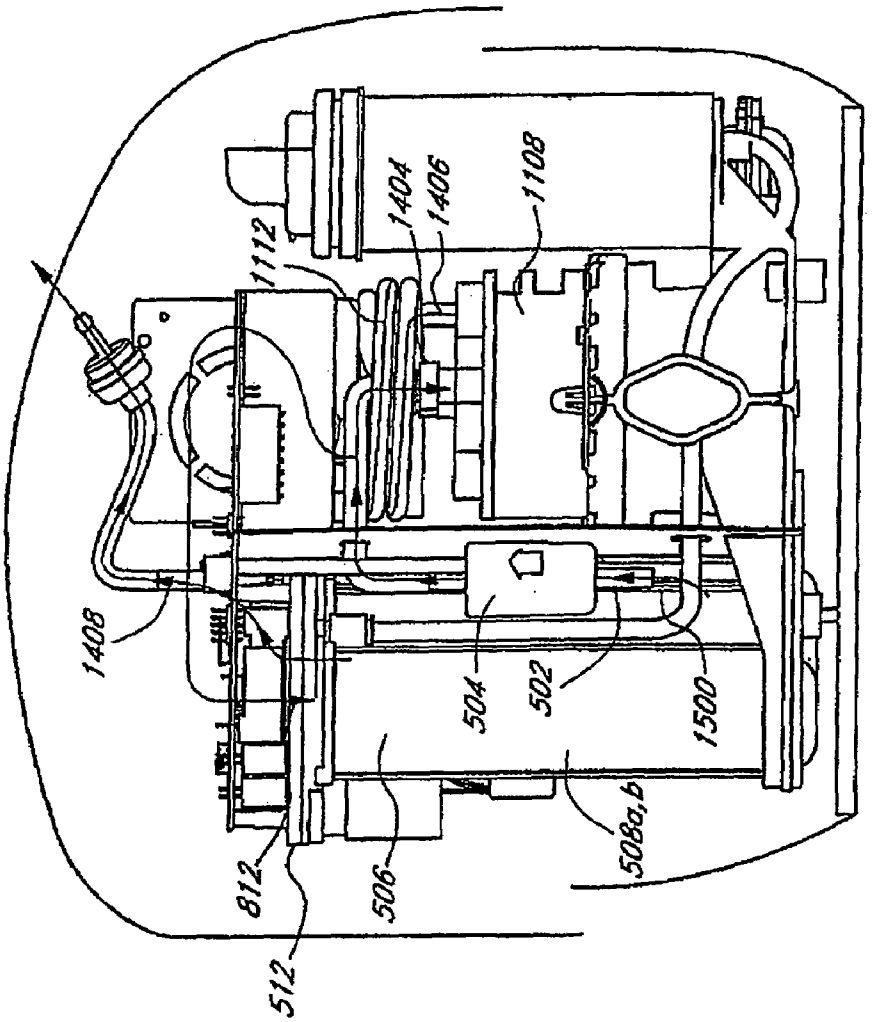

FIG. 15

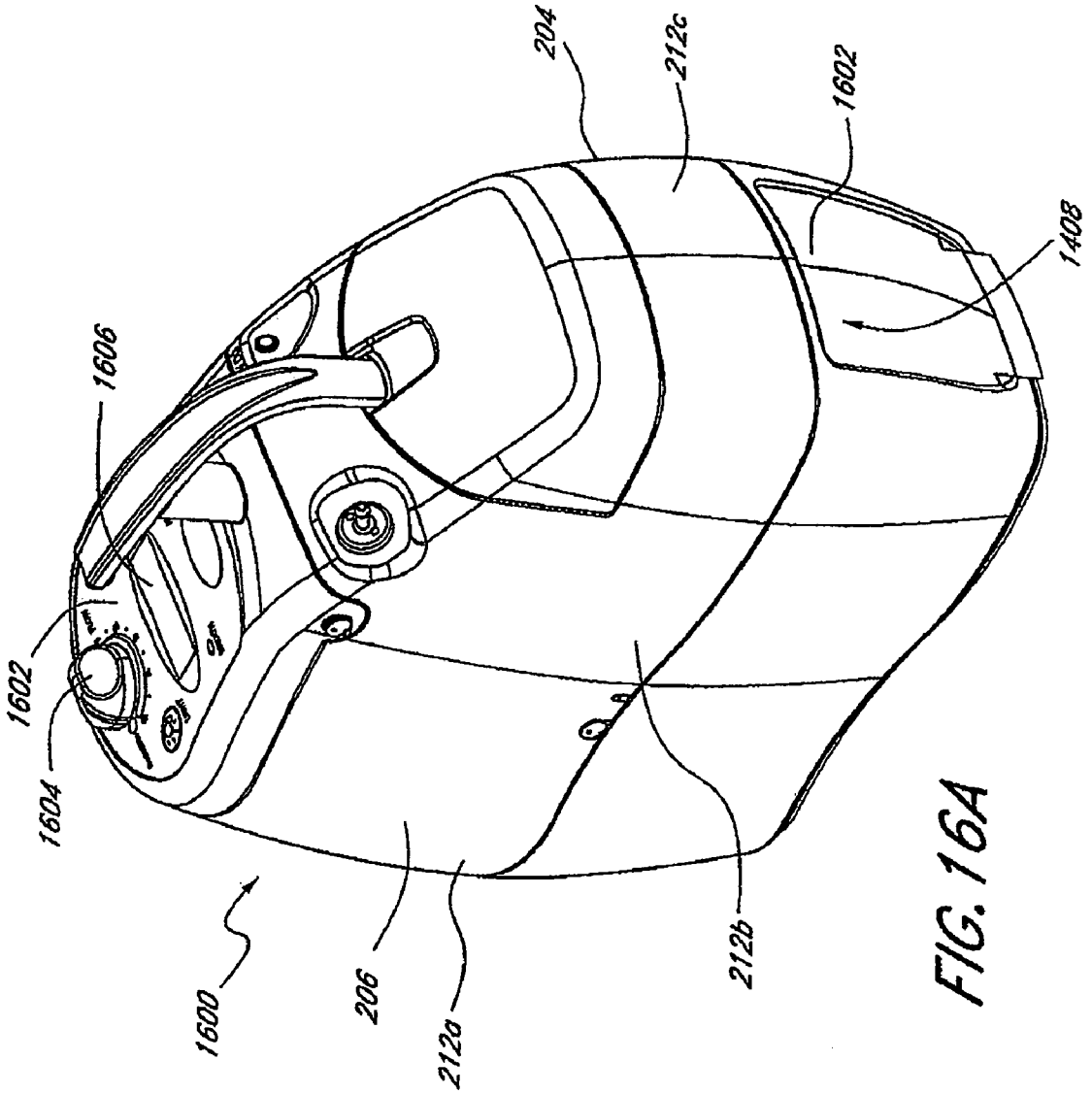

FIG. 16A

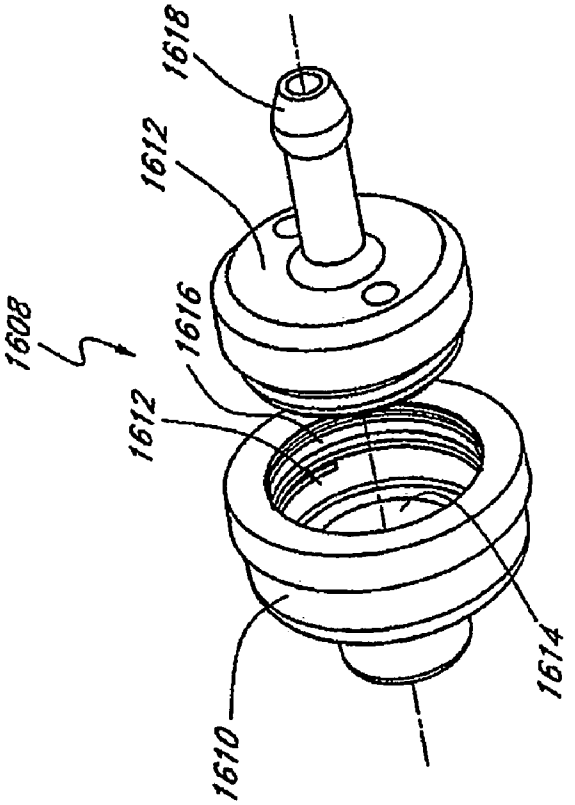

FIG. 16B

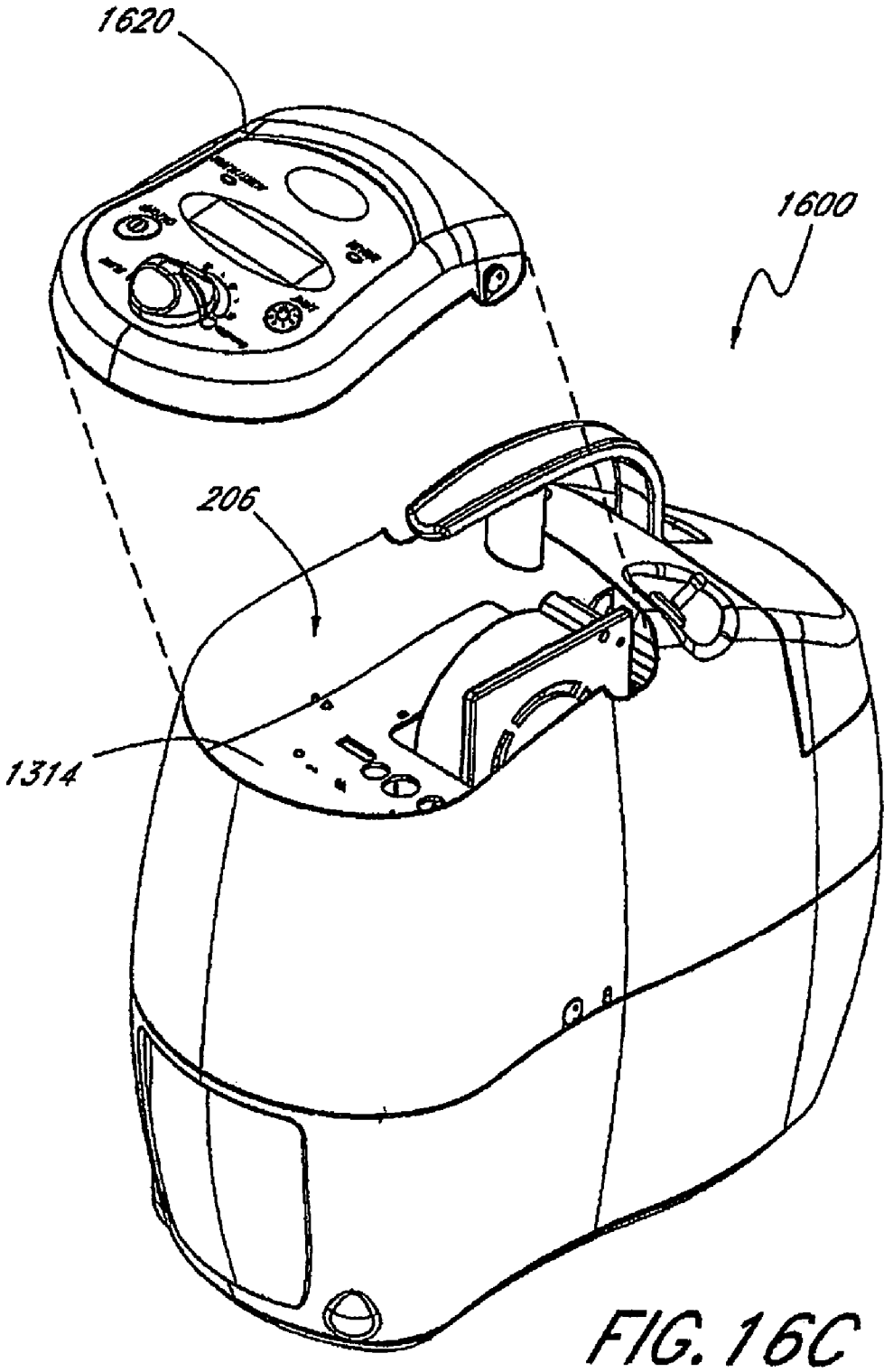

FIG. 16C

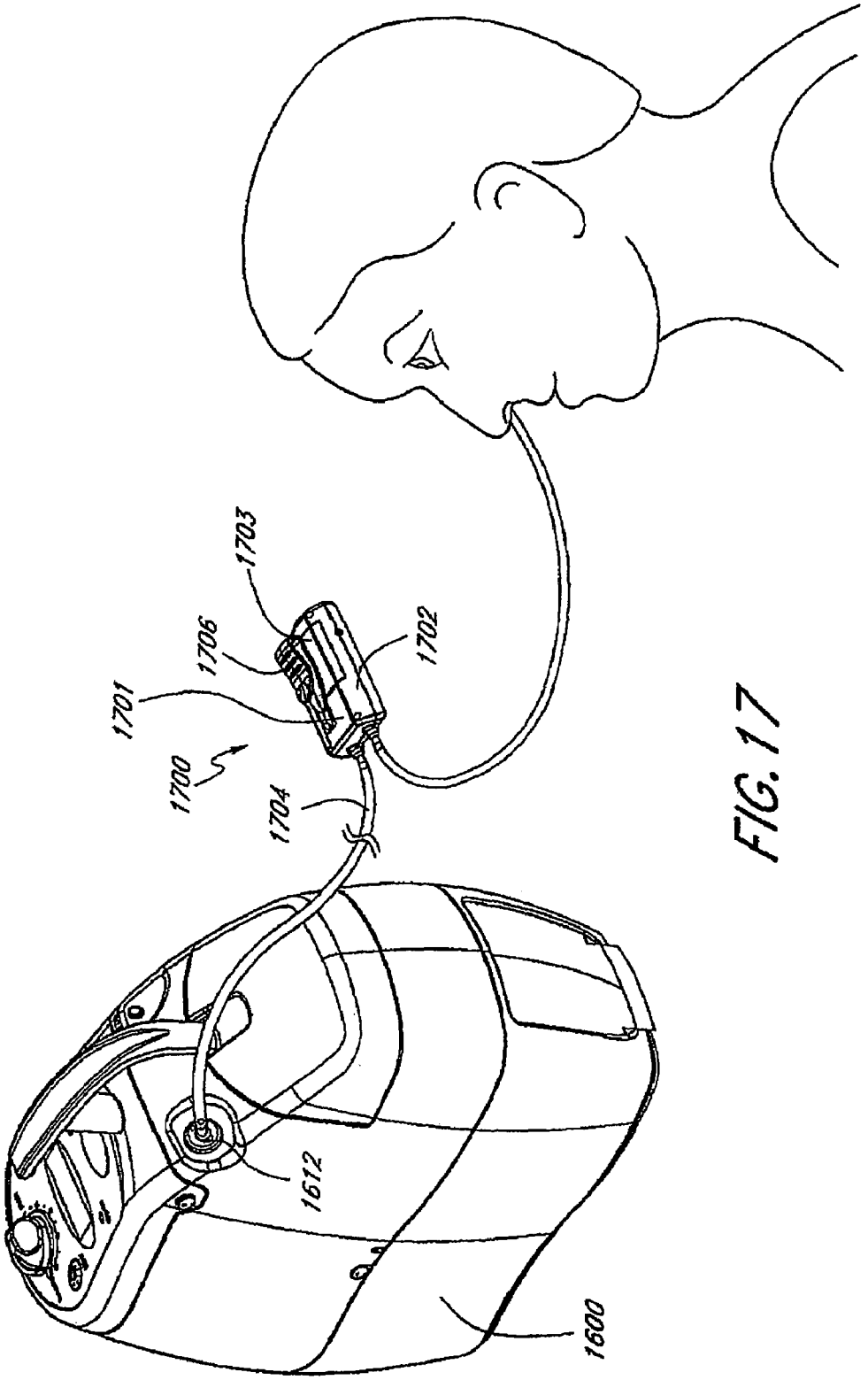

FIG. 17

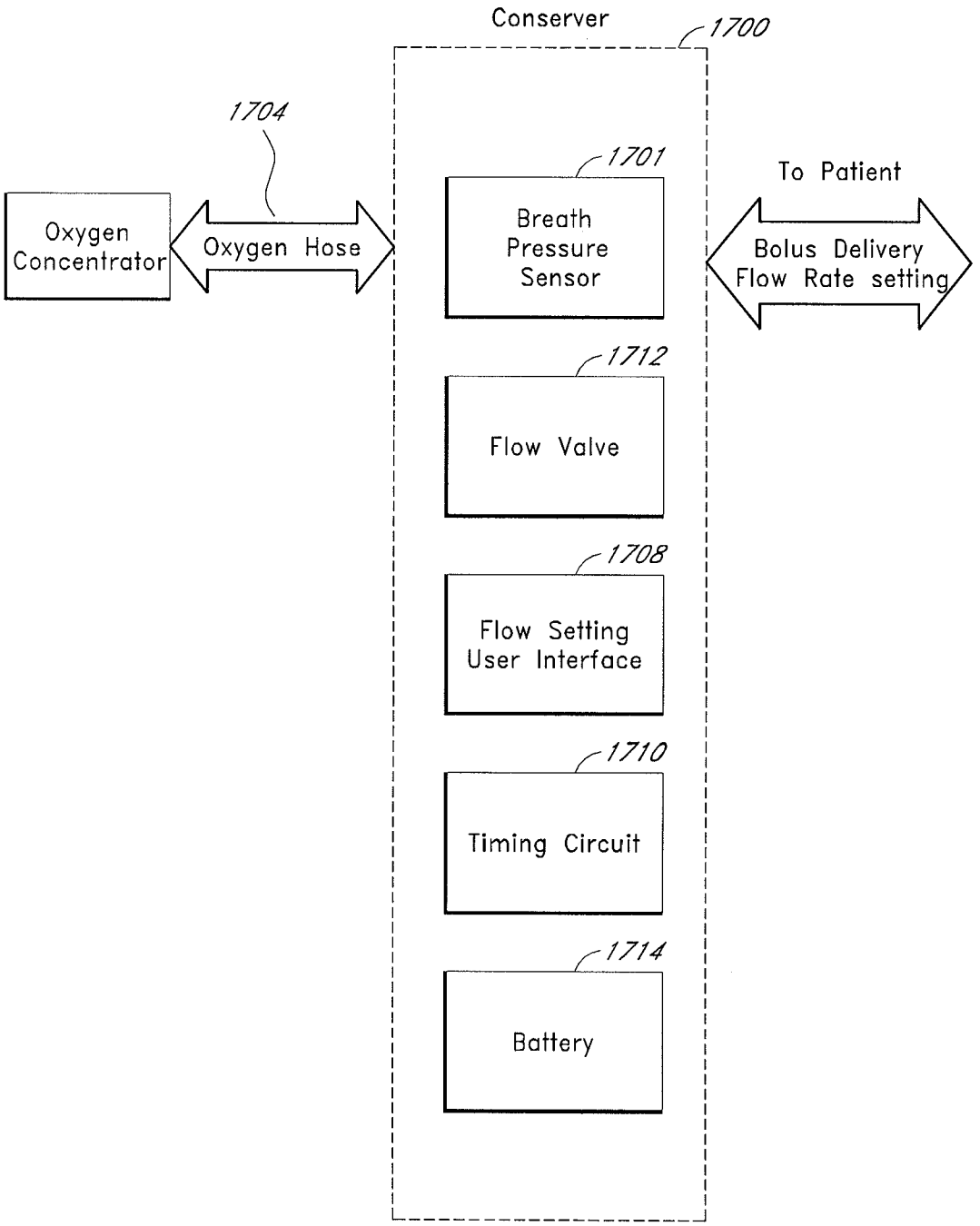
Conserver
1700
1704
1701
To Patient
Oxygen Concentrator
Oxygen Hose
Breath Pressure Sensor
Bolus Delivery Flow Rate setting
1712
Flow Valve
1708
Flow Setting User Interface
1710
Timing Circuit
1714
Battery

FIG. 17A

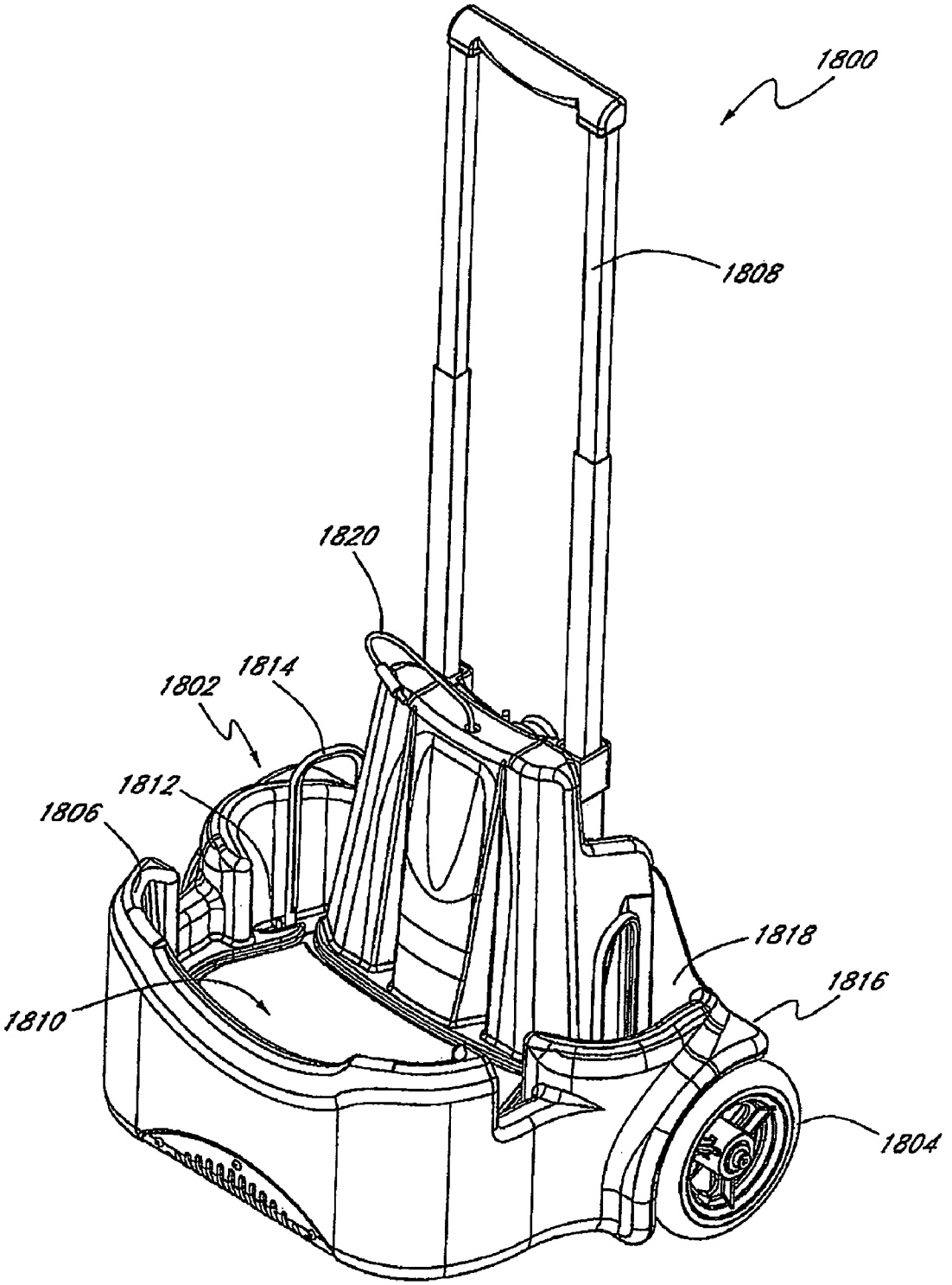

FIG. 18A

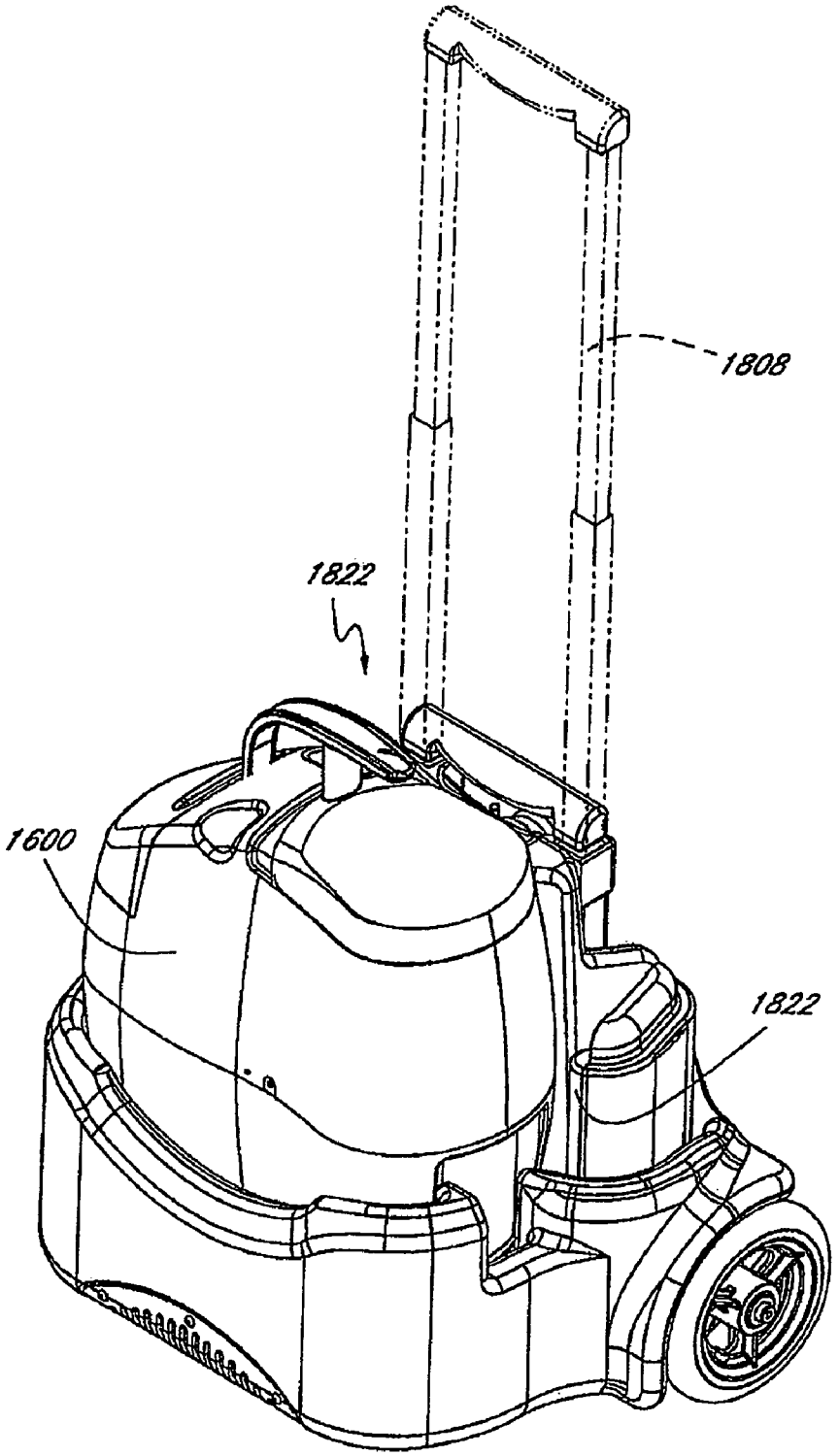

FIG. 18B

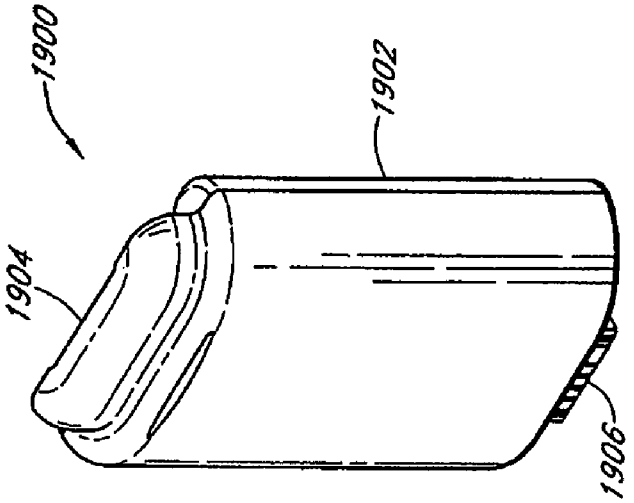

FIG. 19A

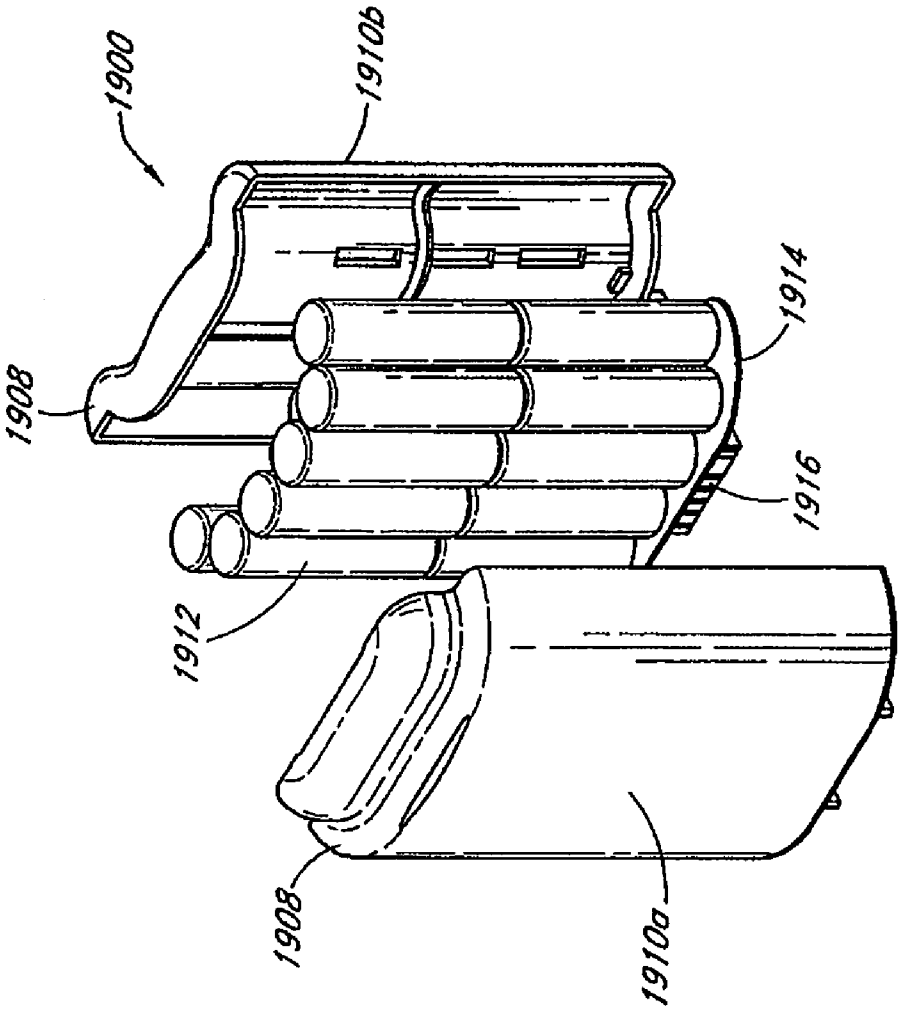

FIG. 19B

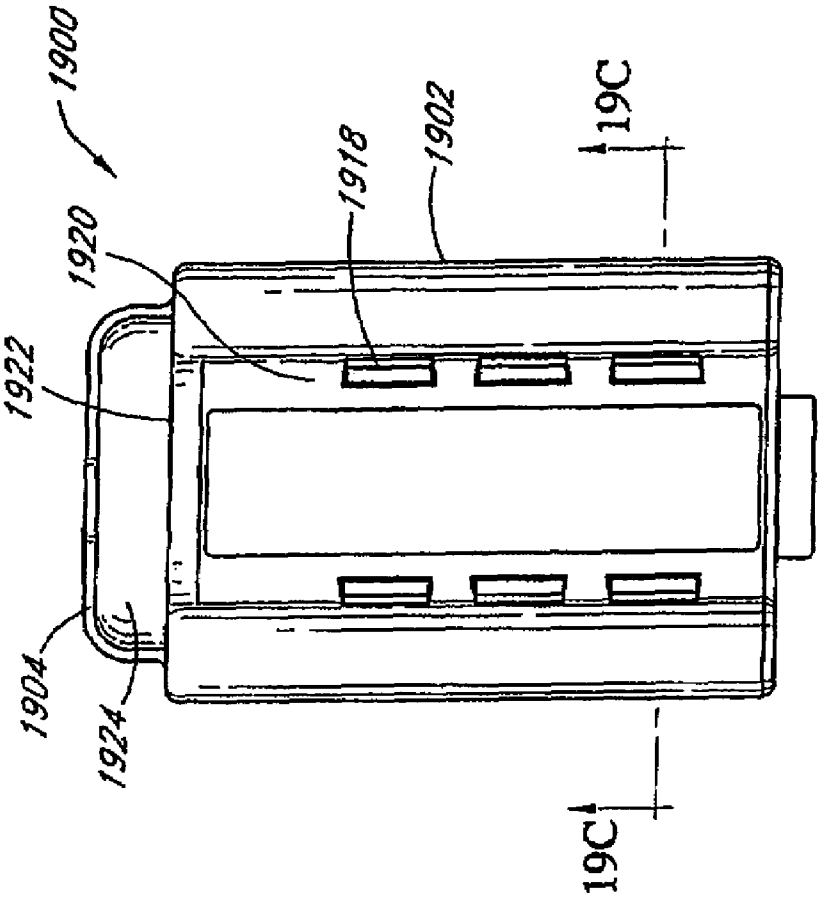

FIG. 19C

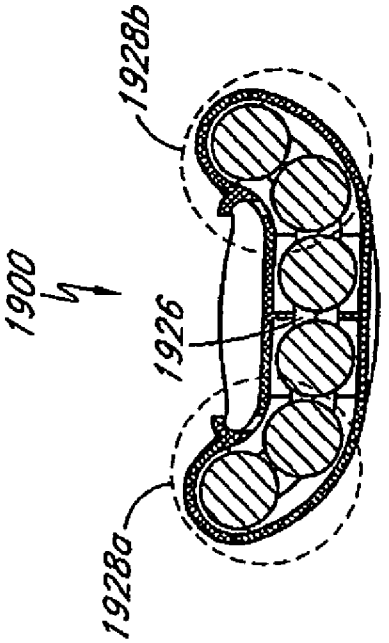

FIG. 19D

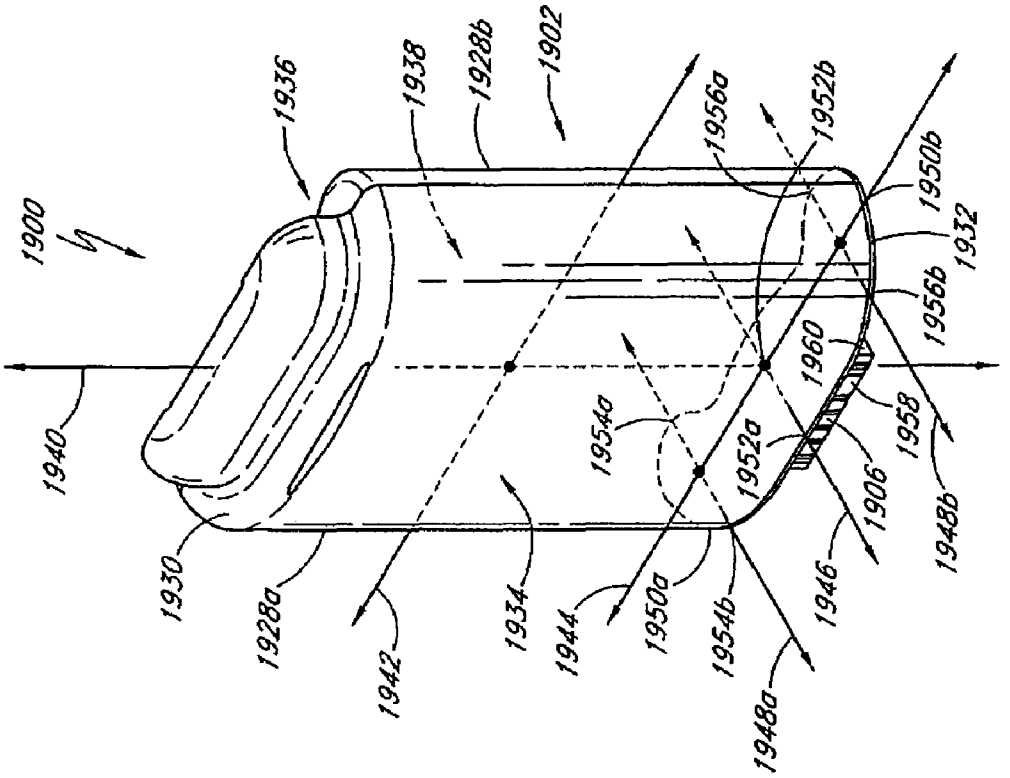
1900
1936
1938
1928b
1902
1956a
1952b
1950b
1932
1956b
1960
1958
1948b
1906
1946
1952a
1954a
1940
1930
1928a
1942
1934
1944
1950a
1954b
1948a

FIG. 19E

PORTABLE GAS FRACTIONALIZATION SYSTEM

RELATED APPLICATIONS

This application is a continuation-in-part of U.S. patent application Ser. Nos. 10/680,997, filed Oct. 7, 2003, now U.S. Pat. No. 7,066,985, 10/681,456, filed Oct. 7, 2003, now U.S. Pat. No. 7,135,059, 10/680,885 filed Oct. 7, 2003, pending, and 10/681,487, filed Oct. 7, 2003, pending, which are hereby incorporated by reference in their entireties.

BACKGROUND OF THE INVENTION

1. Field of the Invention

This invention relates generally to a portable gas fractionalization system, more particularly, to a compact oxygen concentrator that is suitable for both in-home and ambulatory use so as to provide users greater ease of mobility.

2. Description of the Related Art

Patients who suffer from respiratory ailments such as Chronic Obstructive Pulmonary Diseases (COPD) often require prescribed doses of supplemental oxygen to increase the oxygen level in their blood. Supplemental oxygen is commonly supplied to the patients in metal cylinders containing compressed oxygen gas or liquid oxygen. Each cylinder contains only a finite amount of oxygen that typically lasts only a few hours. Thus, patients usually cannot leave home for any length of time unless they carry with them additional cylinders, which can be heavy and cumbersome. Patients who wish to travel often have to make arrangements with medical equipment providers to arrange for an exchange of cylinders at their destination or along the route, the inconvenience of which discourages many from taking extended trips away from home.

Supplemental oxygen can also be supplied by oxygen concentrators that produce oxygen concentrated air on a constant basis by filtering ambient air through a molecular sieve bed. While oxygen concentrators are effective at continual production of oxygen, they are typically large electrically powered, stationary units that generate high levels of noise, in the range of 50-55 db, which presents a constant source of noise pollution. Moreover, the units are too heavy to be easily transported for ambulatory use as they typically weigh between 35 to 55 lbs. Patients who use oxygen concentrators are thus tethered to the stationary machines and inhibited in their ability to lead an active life. While portable oxygen concentrators have been developed to provide patients with greater mobility, the currently commercially available portable concentrators do not necessarily provide patients with the ease of mobility that they desire. The portable concentrators tend to generate as much noise as the stationary units and thus cannot be used at places such as the theater or library where such noise is prohibited. Moreover, the present portable concentrators have very short battery life, typically less than one hour, and thus cannot be used continuously for any length of time without an external power source.

From the foregoing, it will be appreciated that there is a need for an apparatus and method that effectively provide supplemental oxygen to patients for both in-home and ambulatory use. To this end, there is a particular need for a portable oxygen concentrator that is lightweight, quiet, and can supply oxygen continuously for an extended period without requiring an external power source.

SUMMARY OF THE INVENTION

In one aspect, the preferred embodiments of the present invention provide a portable gas fractionalization apparatus comprising a PSA unit having plural adsorbent beds which produce oxygen having a purity of at least 87%; a compressor connected to supply compressed air to the PSA unit; and a blower which produces an air stream across the compressor. The PSA unit comprises valves operating in accordance with a PSA cycle that includes a pressure equalization step so as to provide greater than about 31% recovery of oxygen from air. Preferably, the valves of the PSA unit are disposed upstream of the air stream across the compressor such that thermal load on the PSA valves is reduced. Preferably, the compressor is a non-reciprocating compressor so as to reduce compressor noise, wherein the compressor is configured to draw ambient air at a flow rate of no more than about 15 slpm.

In one embodiment, the PSA unit comprises two adsorbent beds that operate in accordance with a six-step PSA cycle. Preferably, the PSA unit provides between about 31%-38% recovery of oxygen from air and produces an oxygen having a purity of between about 87%-93%. In another embodiment, the compressor comprises a scroll compressor configured to supply the compressed air to the PSA unit at a flow rate of between about 4 to 9 slpm and at a pressure of about 35 psia while generating a noise level of less than about 35 dB external to the compressor. In certain embodiments, the apparatus further comprises a heat exchanger which cools the compressed air to about the temperature of the ambient air prior to supplying the compressed air to the PSA unit. Moreover, the apparatus may also include a product gas delivery system which delivers oxygen to the patient at a flow rate of between about 0.15-0.75 slpm; a microprocessor control for recording data on apparatus performance or usage; and an infrared I/O port for transmitting the data to a remote location.

In another aspect, the preferred embodiments of the present invention provide a portable gas fractionalization apparatus comprising a housing having an air inlet and an air outlet wherein the housing is configured such that noise produced exterior to the fractionalization apparatus is no more than about 45 dB. The housing preferably contains components including a compressor, plural adsorbent beds, a battery having a rated life of at least 2 hours. The compressor is powered by the battery so as to draw air into the compressor preferably at a rate of about 15 slpm or less. Moreover, the housing and the components preferably have a combined weight of less than about 10 pounds.

In one embodiment, the apparatus further comprises a blower which is configured to draw ambient air through the air inlet to provide cooling for the components. Preferably, the housing comprises a circuitous air flow passageway for the ambient air to flow through, wherein the circuitous passageway extends between the air inlet and the air outlet and is configured to reduce noise due to air flow. In another embodiment, the compressor is preferably a scroll compressor configured to deliver a feed gas at a flow rate of between about 4 to 9 slpm and at a pressure of about 35 psia while generating a noise level of less than about 35 dB external to the compressor. In certain embodiments, the apparatus further comprises a plurality of sound baffles. Moreover, the housing may also comprise a vibration damper to reduce transfer of vibrational energy from the compressor to the housing.

In another aspect, the preferred embodiments of the present invention provide a method of producing an oxygen rich gas. The method comprises providing ambient air to a non-reciprocating compressor, wherein the ambient air is drawn into the compressor at a flow rate of less than about 15 slpm. The

compressor pressurizes the ambient air and delivers the pressurized air to a PSA unit preferably at a flow rate of between about 4 to 9 slpm. The method further comprises processing the pressurized air in the PSA unit in accordance with a PSA cycle so as to produce an oxygen rich gas having a purity of between about 87%-93%. In one embodiment, the PSA cycle includes a pressure equalization step. In another embodiment, the PSA cycle is a six-step/two bed cycle. Preferably, the PSA unit operating in accordance with the PSA cycle provides greater than about 31% recovery of oxygen from the ambient air. In certain embodiments, the method further comprises generating an air stream across the compressor to provide cooling for the compressor.

In another aspect, the preferred embodiments of the present invention provide a portable gas fractionalization apparatus comprising plural adsorbent bed columns mounted side by side and an integral fluid flow manifold mounted on one end of the columns and comprised of a plurality of integrated flow passages and a plurality of valves which control flow of fluid through the integrated flow passages to and from the columns. In one embodiment, the apparatus further comprises a circuit board having circuitry which controls the valves. The manifold is preferably disposed between the circuit board and the one end of the columns. Preferably, contacts on the circuit board are in direct electrical contact with mating contacts on the valves. In one embodiment, the integrated fluid flow manifold comprises at least one piloted valve. In another embodiment, the integrated fluid flow manifold comprises at least one water trap positioned therein. The adsorbent columns preferably comprise one or more feed tubes configured to direct fluid to flow from flow passages in the integrated manifold mounted on one end of the columns to an opening in the other end of the columns. In one embodiment, the integrated manifold comprises an upper plate and a lower plate, each plate is made of a plastic material.

In another aspect, the preferred embodiments of the present invention provide a portable gas fractionalization apparatus comprising a compressor which produces a feed gas; plural adsorbent beds connected to receive the feed gas from the compressor via a feed gas pathway. The beds preferably provide a purified gas and a waste gas from the feed gas and the waste gas is expelled from the beds via a waste gas pathway. The apparatus further comprises a water trap which traps water condensed in the fluid pathway to prevent the water from reaching the beds. Preferably, the trapped water is located in the waste gas pathway such that the expelled waste gas carries the water away from the beds. In one embodiment, the water trap is positioned at a lower elevation relative to the feed gas pathway, wherein gravity causes the condensed water in the feed gas pathway to flow into the water trap located at the lower elevation. In another embodiment, the water trap is positioned in a laminated manifold, preferably in the center of a three way junction formed by airflow pathways to and from a feed valve, an exhaust valve, and a connection to an adsorbent bed.

In another aspect, the preferred embodiments of the present invention provide a portable gas fractionalization apparatus comprising a housing, a compressor mounted in the housing on a vibration damping member, and a compressor restraint connected between the compressor and the housing and sufficiently elastically yieldable to non-rigidly fasten the compressor to the housing. In one embodiment, the vibration damping member comprises a grommet having a plurality of ribs formed thereon. In another embodiment, the compressor restraint comprises an elastic tether having elongated legs configured with pre-formed bends which extend away from each other. The bends preferably can be pressed toward each other to straighten the legs and increase the overall length of the compressor restraint so as to facilitate mounting and removal of the compressor restraint.

In another aspect, the preferred embodiments of the present invention provide an adsorbent bed column comprising an elongated housing; an adsorbent material positioned inside the housing, and a first filter positioned proximate one end of the housing. The filter preferably comprises a generally annular member in sealing engagement with the housing, and a filter portion integrally formed as a single piece with the annular member. In one embodiment, the annular member comprises a silicone material and the filter portion comprises a woven fabric that is molded with the annular member. In another embodiment, the first filter is adapted to filter particulate greater than about 70 microns.

In another aspect, the preferred embodiments of the present invention provide an adsorbent bed column comprising an elongated housing; plural adsorbents positioned inside the housing; and a first filter comprised of a frit positioned proximate one end of the housing adjacent at least one adsorbent. In one embodiment, the column further comprises a second filter comprised of a frit positioned proximate the other end of the housing adjacent at least one adsorbent. Preferably, the first and second filters each has a thickness of at least 0.2 inch so as to be sufficiently thick to substantially restrain movement of the adsorbents inside the housing. In another embodiment, the column further comprises a wave spring positioned against an exterior surface of the first filter so as to apply a substantially even pressure over the first filter.

In another aspect, the preferred embodiments of the present invention provide a portable gas fractionalization apparatus comprising a compressor which compresses a gas, such as air, to provide a feed gas; plural adsorbent beds which receive said feed gas and output a purified gas and a waste gas; a battery which supplies power to said compressor; and a housing which comprises an ambient air inlet, an ambient air outlet, and plural compartments. Preferably, a first of the compartments contains the adsorbent beds and a second of the compartments contains the compressor, wherein the compartments significantly inhibit migration of thermal energy from the second compartment to the first compartment. In one embodiment, the apparatus further comprises an air circulation fan which draws air through the inlet into the first compartment, and through the first compartment into the second compartment, the air being exhausted through the outlet. Preferably, the fan is positioned directly above the compressor and produces an air stream directly against the compressor.

In one embodiment, the housing further comprises a circuitous air passageway having an upstream portion and a downstream portion through which the air is directed to flow. The upstream portion is preferably positioned adjacent the first compartment and the downstream portion is positioned adjacent the second compartment. Preferably, air in the downstream portion is substantially inhibited from flowing into the upstream portion. In one embodiment, the first compartment further contains heat sensitive components including a plurality of valves interconnected to the adsorbent beds and a circuit board having control circuitry which governs the operation of the valves. In another embodiment, the apparatus further comprises a plurality of sound absorbing baffles positioned along at least a portion of the air passageway.

In another aspect, the preferred embodiments of the present invention provide a portable gas fractionalization apparatus which includes a housing comprised of a chassis and a shell. The apparatus further includes a plurality of components mounted on and structurally supported by the chassis. Pref-

erably, the shell covers the components and is removable from the chassis without removing the components. In one embodiment, the shell has a plurality of sidewalls, wherein at least one sidewall has a concave or convex section that provides curvature to the sidewall so as to reduce coupling of sound or vibration energy generated by components in the housing. In another embodiment, the shell has an opening adapted to receive a filter which filters fluid output from the apparatus wherein the filter is accessible from the exterior of the shell. Moreover, the chassis preferably comprises a plurality of integral structures adapted to receive and support the components, such as an integral compressor mount, an integral battery slot, and at least one integral gas flow passageway. Preferably, the chassis provides an intermediary vibration isolation between the components and the shell of the housing. In certain embodiments, the housing further includes a hatch that is removably attached to the shell to provide access to one or more components therein.

In another aspect, the preferred embodiments of the present invention provide a portable gas fractionalization apparatus comprising a compressor which produces a feed gas; plural adsorbent beds connected to receive the feed gas and produce a purified gas and a waste gas from the feed gas; a battery; and a conduit connected to deliver the waste gas to the battery to cool the battery. In one embodiment, the waste gas comprises a nitrogen rich gas. In another embodiment, the battery is positioned in a battery compartment such that the conduit delivers waste gas to a space between the battery and the battery compartment. Preferably, the battery compartment is comprised of a thermal sleeve positioned around the battery.

In another aspect, the preferred embodiments of the present invention provide a method of producing oxygen. The method comprises providing an oxygen concentrator having an air compressor which supplies compressed air to a PSA unit comprising plural adsorbent beds and a plurality of valves which control fluid flow to and from the beds; generating an air flow through the concentrator by inputting air through an inlet and outputting the air through an outlet, such that the air flows along a flow path through the concentrator; and exposing the valves to an upstream portion of the flow path and exposing the air compressor to a downstream portion of the flow path, such that the valves are substantially isolated from air that flows through the downstream portion of the flow path. Preferably, the air flow is generated using an air circulation fan to produce an air stream directly against the air compressor. In one embodiment, the method further comprises directing the air flow to flow along a circuitous flow path through the concentrator. Preferably, the air in the downstream portion of the flow path is substantially inhibited from circulating back into the upstream portion. In one embodiment, the method further comprises providing a plurality of sound baffles along at least a portion of the air flow path to reduce noise generated by the air flow and guide the air flow along the flow path.

In another aspect, the preferred embodiments of the present invention provide an apparatus for delivering oxygen to a patient. The apparatus comprises an oxygen concentrator having an oxygen delivery outlet, a flexible tube having a length of at least 10 feet, preferably between about 50 to 100 feet, one end of the tube connected to receive oxygen from the outlet, and a conserver which delivers oxygen in metered amounts in response to sensed breaths of the patient. The conserver is preferably connected to receive oxygen from the other end of the tube and delivers the oxygen to the patient. In one embodiment, the conserver comprises a breath sensor adapted to sense breaths of the patient and a delivery valve adapted for delivering oxygen to the patient. In another embodiment, the conserver further comprises an attachment member, preferably comprising a clip, adapted for removably attaching the conserver to the patient. In yet another embodiment, the conserver comprises a patient interface for setting oxygen flow rate. Preferably, the patient interface comprises an adjustment member such as a control knob which selects from a number of discrete flow rates and the adjustment member settings are read by a timing circuit that controls how long the value is open as a function of the adjustment member setting. In certain embodiments, the oxygen concentrator is a portable oxygen concentrator having a weight of no greater than about 10 pounds.

In another aspect, the preferred embodiments of the present invention provide a mobility cart for transporting a gas fractionalization unit. The mobility cart comprises a frame having a support portion and a handle portion, wherein the support portion is adapted to receive a portable gas fractionalization unit for transporting the unit in response to force on the handle portion. The mobility cart further comprises a power supply mounted on the frame, wherein the power supply has an A.C. power input, a first power outlet adapted to charge a battery, and a second power outlet adapted to power the unit. In one embodiment, the handle portion of the frame is configured with an extended position and a retracted position. Preferably, the height of the mobility cart is less than about 18 inches when the handle portion is in the retracted position. In another embodiment, the frame has a second support portion adapted to receive a battery. The second support portion may include a battery bail configured to mate with a plurality of guide rails formed on the battery in a manner so as to secure the battery to the battery bail. Preferably, the first power outlet is adapted to electrically interconnect to the battery when the battery is secured to the battery bail. Moreover, the first power outlet may be adapted to charge a spare battery or a battery mounted inside the unit. In certain embodiments, the power supply also has a third and a fourth power outlet, each adapted to charge a spare battery. Preferably, the power supply is sufficient to simultaneously power the unit and power the outlets for charging the spare batteries and the battery inside the unit.

In another aspect, the preferred embodiments of the present invention provide a wheeled mobility cart comprising a portable gas fractionalization unit; a frame to which the unit is removably connected for transporting the unit on the wheels; and a power supply mounted on the frame. Preferably, the power supply has an A.C. power input, a first power outlet adapted to charge a battery, and a second power outlet adapted to power the unit. Preferably, the portable gas fractionalization unit comprises an oxygen concentrator, more preferably an oxygen concentrator that weighs less than about 10 pounds. In one embodiment, the frame further comprises a handle portion configured with an extended position and a retracted position so as to facilitate storage of the cart.

In another aspect, the preferred embodiments of the present invention provide a battery pack for providing electrical power to a portable oxygen concentrator. The battery pack comprises a generally U-shaped body defined by a center portion and end portions. The center portion forms the bight of the U and the end portions form the legs of the U. The battery pack further comprises a top portion, a bottom portion, an exterior side portion and an interior side portion. The battery pack has a longitudinal axis that extends through the top and bottom portions and generally parallel to the side and end portions and passing through a wall of the interior side portion; a transverse axis that extends through the end portions and parallel to the side, bottom, and top portions and intersecting the longitudinal axis; a lower transverse axis that is parallel to the transverse axis and passes through the bottom

portion and intersecting the longitudinal axis; a central lower lateral axis that is orthogonal to the longitudinal axis and intersecting both the longitudinal axis and the lower transverse axis; a first and second end lower lateral axes that are parallel to the central lower lateral axis and intersect the lower transverse axis and which pass through respective end portions. The battery pack further includes a contact protrusion extending from the bottom portion by about ⅜ inch or more. The contact protrusion has a first sidewall that is generally parallel to the lower transverse axis and has a length of about 1.5 inches or less. The contact protrusion also has a second sidewall that is generally parallel to the central lower lateral axis and has a length of about 0.5 inch or less. The distance between the exterior surfaces of the end portions measured along the lateral transverse axis is about 4.25 inches or less; the distance between the distance between the exterior surfaces of the side portions along the central lower lateral axis is about 1 inch or less; the distance between the exterior surfaces of the first end portion along the first end lateral lower axis is about 1.5 inches or less; and the distance between the exterior surfaces of the second end portion along the second end lateral lower axis is about 1.5 inches or less. Preferably, the battery pack is substantially symmetrical about the central lateral lower axis and asymmetrical about the lower lateral transverse axis. In one embodiment, the battery pack further comprises a handle portion extending upwardly from an upper surface of the body of the battery pack. The battery pack can also include at least one pair of guard rails or clips positioned on the interior side portion of the battery pack. Preferably, the distance between the guard rails is between about 1 and 1.5 inches and the guard rails are configure to engage with a battery bail. In one embodiment, the battery bail is mounted on the oxygen concentrator and/or mobility cart. In another embodiment, the battery pack further includes a casing and a plurality of battery cells enclosed therein, wherein at least a portion of the battery cells are arranged in a side-by-side array along a non-linear path.

In another aspect, the preferred embodiments of the present invention provide a battery pack for portable oxygen concentrators. The battery pack includes a plurality of battery cells; an asymmetrical housing having a U-shaped cross-section, wherein the housing encloses the battery cells therein and permits the battery cells to be positioned in a side-by-side arrangement along a non-linear path inside the housing; a handle portion extending from an upper surface of the housing; and a contact protrusion extends from a lower surface, preferably by ⅜ inch or more, of the housing for mating with power contacts on the concentrator. In one embodiment, the battery cells are selected from the group consisting of lithium ion cells, lithium polymer cells, nickel cadmium cells and nickel metal hydride cells. Preferably, the footprint of the battery pack has a length that is less than about 4.25 inches a width that is less than about 1.5 inches when the battery pack is mounted in an upright position in oxygen concentrator.

In another aspect, the preferred embodiments of the present invention provide an oxygen concentrator comprising at least one current actuated flow control valve, and a Pulse Width Modulated (PWM) current source connected to the at least one control valve by providing a PWM signal to the current source which converts the PWM signal to a valve actuation current. In one embodiment, a first current amplitude corresponding to a value of PWM duty cycle is sufficient to open or close the valve, and a second current amplitude which is lower than the first current amplitude and correspond to a lower PWM duty cycle is sufficient to maintain the valve in the open or closed state.

In another aspect, the preferred embodiments of the present invention provide an oxygen concentrator comprising a controller; at least one current actuated fan; and a Pulse Width Modulated (PWM) current source connected to the fan, wherein the controller actuates the fan by providing a PWM signal to the current source which converts the PWM signal to a fan actuation current.

In another aspect, the preferred embodiments of the present invention provide an oxygen concentrator comprising a controller; at least one current actuated compressor; a Pulse Width Modulated (PWM) current source connected to the compressor, wherein the controller actuates the compressor by providing a PWM signal to the current source which converts the PWM signal to a compressor actuation current. In one embodiment, the speed of the compressor varies with the amplitude of the compressor actuation current, wherein the compressor actuation current varies with the PWM duty cycle provided by the controller to the PWM current source. In another embodiment, the controller provides specific values of PWM duty cycle to the current source which correspond to selectable compressor speeds. In another embodiment, the controller provides specific values of PWM duty cycle to the current source which correspond to selectable compressor speeds. In another embodiment, the oxygen concentrator further comprises a compressor speed sensor, wherein the speed sensor is read by the controller which in turn adjusts the PWM duty cycle provided to the current source to vary the compressor actuation current so as to maintain desired compressor speed during periods when the load on the compressor varies.

BRIEF DESCRIPTION OF THE DRAWINGS

FIG. **1** is a block diagram of a portable gas fractionalization system of one preferred embodiment of the present invention;

FIG. **2** is a perspective view of a portable gas fractionalization apparatus of another preferred embodiment, which is shown in the form of an oxygen concentrator;

FIG. **3** is a perspective view of the apparatus of FIG. **2** as seen with the shell removed;

FIG. **4** is a perspective view of the chassis of the apparatus of FIG. **2**;

FIG. **5** is a perspective view of the components inside the first compartment of the apparatus of FIG. **2**, showing a PSA unit;

FIG. **5**A is a schematic illustration of a Pulse Width Modulated (PWM) current source being used to control various components of the apparatus of FIG. **5**;

FIG. **6** is a schematic illustration of an adsorbent bed column of the PSA unit of FIG. **5**;

FIGS. **7**A and **7**B are schematic diagrams of gas flow to and from the adsorbent bed column of FIG. **6**;

FIG. **8** is a detailed view of the integrated manifold of the PSA unit of FIG. **5**;

FIG. **9** is a schematic illustration of a water trap system incorporated in the integrated manifold of FIG. **8**;

FIG. **10** is a schematic illustration of a piloted valve system incorporated in the integrated manifold of FIG. **8**;

FIG. **11** is a perspective view of the components inside the second compartment of the apparatus of FIG. **2**, showing a compressor system;

FIG. **12** is a perspective view of a vibration damping member incorporated in the compressor system of FIG. **11**;

FIG. **13** is a perspective view of the components assembled in the housing of the apparatus of FIG. **2**;

FIG. **14** is a schematic diagram of a directed ambient air flow through the housing of the apparatus of FIG. **2**, illustrating a thermal management system of one preferred embodiment;

FIG. **15** is a schematic diagram of a gas flow through the components of the apparatus of FIG. **2**;

FIG. **16**A is a perspective view of the apparatus of FIG. **2**, showing an in-line filter integrated in the shell of the apparatus;

FIG. **16**B is a detailed view of the in-line filter of FIG. **16**B;

FIG. **16**C is a perspective view of the apparatus of FIG. **2**, showing a removable hatch;

FIG. **17** is a schematic illustration of a satellite conserver used in conjunction with the apparatus of FIG. **2**;

FIG. **17**A illustrates the various functionalities including flow setting user interface incorporated in the satellite conserver of FIG. **17**;

FIGS. **18**A and **18**B are schematic illustrations of a mobility cart used in conjunction with the apparatus of FIG. **2** for transporting the apparatus;

FIG. **19**A is a perspective view of a battery pack used to provide electrical power to the portable gas fractionalization apparatus of FIG. **2**;

FIG. **19**B is an exploded view of the battery pack of FIG. **19**A;

FIG. **19**C is a rear view of the battery pack of FIG. **19**A;

FIG. **19**D is a cross-sectional view of the battery pack of FIG. **19**A, showing a U-shaped configuration; and

FIG. **19**E is a schematic illustration of the battery pack of FIG. **19**A.

DETAILED DESCRIPTION OF PREFERRED EMBODIMENTS

FIG. **1** schematically illustrates a portable gas fractionalization system **100** of one preferred embodiment of the present invention. As shown in FIG. **1**, the system **100** generally comprises an intake **102** through which ambient air is drawn into the system, a filter **104** for removing particulate from the intake air, a compressor assembly **106** for pressurizing the intake air to provide a feed gas, a pressure swing adsorption (PSA) unit **108** which receives and processes the feed gas to produce a product gas having a higher oxygen content than the ambient air, and a gas delivery system **110** for delivering the product gas to a patient.

Ambient air is drawn through the intake **102** at a relatively low flow rate, preferably no greater than about 15 standard liters per minute (slpm), so as to reduce noise due to airflow through the system. The system **100** further includes a fan **112** that produces an air stream across the compressor assembly **106** also preferably at a relatively low flow rate so as to provide cooling for the compressor assembly **106** without generating excessive noise.

As also shown in FIG. **1**, the compressor assembly **106** includes a compressor **114** and an heat exchanger **116**. The compressor **114** is preferably a non-reciprocating compressor, more preferably a scroll compressor described in U.S. Pat. Nos. 5,759,020 and 5,632,612, which are hereby incorporated by reference in their entirety. It is generally understood that a scroll compressor operates by moving a plate such that it orbits in a single plane relative to a fixed plate. Thus, the use of a scroll compressor advantageously eliminates reciprocating motion that tends to generate the excessive noise and vibration associated with many conventional piston compressors. In one embodiment, the scroll compressor **114** delivers an air flow of between about 4 to 9slpm at a pressure of about 35psia, while generating a noise level of less than about 35 dB external to the compressor. The scroll compressor **114** does not require lubricating oil and thus operates in a substantially oil-free environment, which advantageously reduces the likelihood of introducing oil contaminants into the compressed air. As FIG. **1** further shows, the compressor **114** works in conjunction with the heat exchanger **116** to provide cooled feed gas to the PSA unit **108**. In one embodiment, the heat exchanger **116** has a large thermally conductive surface that is in direct contact with the air stream produced by the fan **112** such that pressurized air traveling through the heat exchanger **116** can be cooled to a temperature close to ambient prior to being supplied to the PSA unit **108**.

The PSA unit **108** is configured to operate in accordance with a pressure swing adsorption (PSA) cycle to produce an oxygen enriched product gas from the feed gas. The general operating principles of PSA cycles are known and commonly used to selectively remove one or more components of a gas in various gas fractionalization devices such as oxygen concentrators. A typical PSA cycle entails cycling a valve system connected to at least two adsorbent beds such that a pressurized feed gas is sequentially directed into each adsorbent bed for selective adsorption of a component of the gas while waste gas from previous cycles is simultaneously purged from the adsorbent bed(s) that are not performing adsorption. Product gas with a higher concentration of the un-adsorbed component(s) is collected for use. Additional background information on PSA technology is described in U.S. Pat. No. 5,226,933, which is hereby incorporated by reference.

As shown in FIG. **1**, the PSA unit **108** of a preferred embodiment includes two adsorbent beds **118***a*, **118***b*, each containing an adsorbent material that is selective toward nitrogen, and a plurality of valves **120***a-j* connected thereto for directing gas in and out of the beds **118***a*, **118***b*. As will be described in greater detail below, the valves **120***a-j* preferably operate in accordance with a novel PSA cycle which comprises a six step/two bed process that includes a pressure equalization step in which a portion of the effluent product gas from one bed is diverted to pressurize another bed in order to improve product recovery and reduce power consumption. One preferred embodiment of the PSA cycle comprises the following steps:

Step 1: Pressurize-Adsorbent Bed **118***a*/Production-Adsorbent Bed **118***b*

pressurizing adsorbent bed **118***a* by directing feed gas into adsorbent bed **118***a* in the co-current direction at a feed pressure of about 35 psia while simultaneously diverting oxygen enriched product gas of higher pressure from adsorbent bed **118***b* into adsorbent bed **118***a* in the counter-current direction until pressures of the two beds **118***a*, **118***b* are substantially equalized;

releasing product gas from adsorbent bed **118***b* to a storage vessel **124** while stopping the flow of feed gas from entering adsorbent bed **118***b;*

Step 2: Feed-Adsorbent Bed **118***a*/Blowdown-Adsorbent Bed **118***b*

feeding adsorbent bed **118***a* with feed gas at a rate of about 4-8.5 slpm at a feed pressure of about 35 psia;

counter-currently releasing nitrogen enriched waste gas from adsorbent bed **118***b* to an exhaust muffler **122**;

Step 3: Feed and Production-Adsorbent Bed **118***a*/Purge-Adsorbent Bed **118***b*

releasing product gas from adsorbent bed **118***a* to the storage vessel **124** while continuing to feed adsorbent bed **118***a* with feed gas at a rate of about 4-8.5 slpm. at a feed pressure of about 35 psia;

purging adsorbent bed **118***b* by releasing product gas from the storage vessel **124** to adsorbent bed **118***b* while continuing to counter-currently release waste gas from adsorbent bed **118***b* to the exhaust muffler **122**;

Step 4: Production-Adsorbent Bed **118***a*/Pressurize-Adsorbent Bed **118***b*

continuing to release product gas from adsorbent bed **118***a* to the storage vessel **124** while stopping the flow of feed gas from entering adsorbent bed **118***a;*

pressurizing adsorbent bed **118***b* by directing feed gas into adsorbent bed **118***b* in the co-current direction at a feed pressure of about 35 psia while simultaneously diverting product gas of higher pressure from adsorbent bed **118***a* into adsorbent bed **118***b* in the counter-current direction until pressures of the two beds **118***a*, **118***b* are substantially equalized;

Step 5: Blowdown-Adsorbent Bed **118***a*/Feed-Adsorbent Bed **118***b*

counter-currently releasing waste gas from adsorbent bed **118***a* to the exhaust muffler **122**;

feeding adsorbent bed **118***b* with feed gas at a rate of about 4-8.5 slpm at a feed pressure of about 35 psia;

Step 6: Purge-Adsorbent Bed **118***a*/Feed and Production-Adsorbent Bed **118***b*

releasing product gas from adsorbent bed **118***b* to the storage vessel **124** while continuing to feed adsorbent bed **118***b* with feed gas at a rate of about 4-8.5 slpm at a feed pressure of about 35 psia;

purging adsorbent bed **118***a* by releasing product gas from the storage vessel **124** to adsorbent bed **118***a* while continuing to counter-currently release waste gas from adsorbent bed **118***a* to the exhaust muffler **122**;

The PSA cycle described above advantageously includes one or more pressure equalization steps (steps 1 and 4) in which already pressurized product gas is released from one adsorbent bed to provide initial pressurization for another adsorbent bed until the two beds have reached substantially the same pressure. The pressure equalization step leads to increased product recovery and lower power consumption because it captures the expansion energy in the product gas and uses it to pressurize other adsorbent beds, which in turn reduces the amount of power and feed gas required to pressurize each bed. In one embodiment, the two-bed PSA unit shown in FIG. **1** operating in accordance with the above-described six-step/two-bed PSA cycle is capable of producing oxygen having a purity of at least about 87%, preferably between about 87%-93%, with greater than about 31% recovery of oxygen from feed gas, more preferably greater than about 38% recovery. In operation, the valves **120***a-j* of the PSA unit **108** are controlled in a known manner to open and close for predetermined time periods in accordance with the above described PSA steps. Additionally, the valves **120***a-j* are preferably positioned upstream of the air stream produced by the fan **112** across the compressor assembly **106** so as to not expose the valves **120***a-j* to portions of the air stream that are heated by the compressor assembly **106**. In other embodiments, the system may utilize a vacuum swing adsorption (VSA) unit or a vacuum-pressure swing adsorption (VPSA) unit to produce the oxygen rich product gas.

As FIG. **1** further shows, the product gas produced by the PSA unit **108** is delivered to a patient via the product gas delivery system **110**. The product gas delivery system **110** generally includes an oxygen sensor **126** for monitoring the oxygen content of the product gas exiting the storage vessel **124**, a delivery valve **128** for metering the product gas to the patient, an in-line filter **130** for removing fine particulate in the product gas immediately prior to delivery to the patient, a conserver device **132** that controls the amount and frequency of product gas delivered based on the patient's breathing pattern. In certain embodiments, the product gas delivery system may also incorporate a unit that measures pressure within the storage vessel which in turn dictates the rate at which product gas is driven through the delivery valve. Preferably, product gas is delivered to the patient at a flow rate of about 0.15-0.75 slpm at about 90% oxygen content. In one embodiment, the system **100** also includes a microprocessor control **134** for collecting and recording data on system performance or patient usage pattern and an infrared port **136** for transmitting the data to a remote location.

FIG. **2** illustrates a gas fractionalization apparatus **200** of the preferred embodiment, which is shown in the form of a portable oxygen concentrator. As illustrated in FIG. **2**, the apparatus **200** generally comprises a chassis **202** (see also FIG. **3**) and a shell **204** that together form a housing **206** in which various components are mounted. The chassis **202** is removably attached to a base **208** of the housing **206**. The base **208** has a substantially planar exterior bottom surface adapted to rest against a support surface such as a table or floor. The shell **204** of the housing **206** further includes an upper wall **210** and side walls **212***a-d*, each having at least one convex and/or concave section that provides a curvature to the wall so as to reduce coupling of sound or vibration energy generated by the components in the housing. Such curvature is also effective to reduce constructive interference of the coupled energy within the walls. Accordingly, the lack of planar sections in the walls **210**, **212***a-d* of the housing **206** that are conducive to vibration reduces noise induced by vibration. Moreover, the non-planar walls **210**, **212***a-d* also serve to discourage users from setting the housing on its side or placing it in any orientation other than the upright as the components inside the housing are designed to operate optimally in the upright orientation, which will be described in greater detail below.

As shown in FIG. **3**, the components in the housing **206** are structurally supported by the chassis **202** and the chassis **202** is removably attached to the shell **204**. As such, the components can be assembled outside the confines of the shell **204**. Also, the shell can be conveniently removed to provide access for testing, repair, or maintenance of the components. Additionally, the housing **206** is preferably separated into two compartments **300**, **302** by a partition **304**. The partition **304** in conjunction with an air flow system to be described in greater detail below significantly inhibits migration of thermal energy from the second compartment **302** to the first compartment **300**. Preferably, heat sensitive components are placed in the first compartment **300** and heat generating components are mounted in the second compartment **302** so as to thermally isolate the heat sensitive components from the heat generating components for optimal system performance.

FIG. **4** provides a detailed view of the chassis **202**, as seen without the components. As shown in FIG. **4**, the chassis **202** contains a number of pre-formed structures configured to receive and support the different components in the housing. Three circular recess **400***a-c* are formed in a first base portion **402** of the chassis **202** for mating with a PSA unit. Three corresponding divots **404***a-c* are also formed in the first base portion **402** immediately adjacent each respective recess **400***a-c*. The divots **404***a-c* extend laterally into each respective recess **400***a-c* to direct gas flow in and out of the PSA unit in a manner to be described in greater detail below. As such, the chassis serves as a manifold of sorts for routing gases to and from the PSA unit. An annular compressor mount **406** extends upwardly from a second base portion **408** of the chassis **202** to provide an elevated mounting surface for a

compressor assembly and define an opening **410** sufficiently large to receive a portion of the assembly. As will be described in greater detail, the compressor mount **406** is configured to support the compressor assembly in a manner such that transfer of vibrational energy from the compressor assembly to the housing is reduced. As also shown in FIG. **4**, an oblong slot **412** and a bail **414** are formed adjacent the compressor mount **406** for receiving and securing a battery. In one embodiment, electrical mating contacts are formed in the slot **412** for connecting the battery to operating circuitry. In one embodiment, a battery circuit is mounted on the bottom of the slot which can also contain a IRDA transmitter/receiver. Moreover, the chassis **202** can also be fit with notches to receive and support the bottom of the partition.

Preferably, at least some of the above-described structures of the chassis **202** are integrally formed via an injection molding process so as to ensure dimensional accuracy and reduce assembly time. These pre-formed structures in the chassis advantageously facilitate assembly of the components and help stabilize the components once they are assembled in the housing. In one embodiment, the chassis serves the function of providing an intermediary vibration isolation to the compressor and motor. As shown in FIG. **4**, the chassis has bottom mounts or vibration isolation feet **407** that are configured to engage with the bottom of the shell. Preferably, screws are inserted through the bottom of the shell and into the bottom of the vibration feet **407**. In another embodiment, the chassis further comprises an integrated muffler for exhaust gas. Preferably, a recess is formed below the battery slot in which felt or other porous material is placed. As will be described in greater detail below, an exhaust tube from the PSA unit is preferably ported directly into this recess and the felt serves to break up noise coming from the release of pressurized waste gas.

FIG. **5** provides a detailed view of the components in the first compartment **300** of the housing **206**. As shown in FIG. **5**, the first compartment **300** generally contains an air intake **502**, an intake filter **504**, and a PSA unit **506**. The air intake **502** is an elongated tube coupled to the intake filter **504** and extending downwardly therefrom to receive intake air. The intake filter **504** comprises a cylindrical shaped filter that is preferably capable of removing particles greater than about 0.1 microns from the intake air with about 93% efficiency. Moreover, the shape, density, and material of the intake filter **504** can be selected to provide the filter with acoustic properties so that the filter can also serve as an intake muffler. As will be described in greater detail below, the intake filter **504** is in fluid communication with a compressor system and supplies the compressor system with filtered intake air. Both the air intake **502** and the intake filter **504** are preferably mounted in the first compartment **300** of the housing **206** so as to avoid drawing higher temperature air produced by components in the second compartment into the system.

As FIG. **5** further shows, the PSA unit **506** generally includes a pair of adsorbent bed columns **508***a*, **508***b*, a product gas storage column **510**, and an integrated manifold **512** for controlling fluid flow to and from the columns **508***a-b*, **510**. Each adsorbent bed column **508***a-b* comprises an elongated housing containing a nitrogen-selective adsorbent material such as zeolite. The adsorbent bed columns **508***a-b* are adapted to remove nitrogen from intake air in a known manner in accordance with a PSA cycle so as to produce an oxygen rich product gas. The product gas storage column **510** comprises an elongated housing adapted to receive and store the oxygen rich product gas. In one embodiment, the product gas storage column **510** also contains an adsorbent material capable of holding a higher molar density of the product gas than an equivalent gas filled chamber at equal pressure. As shown in FIG. **5**, all three columns **508***a-b*, **510** are mounted side by side in the housing **206**. Preferably, the columns **508***a-b*, **510** have substantially the same length so that the integrated manifold **512** can be mounted horizontally on the upper end of the columns **508***a-b*, **510**.

As will be described in greater detail below, the integrated manifold **512** contains a plurality of integrated flow passages formed in a single plane that permit fluid to flow to and from the columns **508***a-b*, **510**. The integrated manifold **512** also has a plurality of solenoid valves **514** positioned in a single plane that control the flow of the fluid to and from the columns **508***a-b*, **510** during a PSA cycle. As shown in FIG. **5**, the integrated manifold **512** is mounted on the upper end of the columns **508***a-b*, **510** in a manner such that the integrated flow passages in the manifold are in fluid communication with openings in the upper end of each column. While the manifold **512** is positioned on only the upper end of the columns, gas flow from the manifold can enter the column housing through either the upper or lower end due to a novel single-ended column design to be described in greater detail below. In one embodiment, the valves **514** of the manifold **512** contain a plurality of contact pins **516** adapted for direct contact with a circuit board in a manner to be shown in greater detail below. A circuit board controlling the valves can be mounted directly on top of the manifold **512** without additional wires, which advantageously simplifies the assembly process and also allows for the construction of a more compact device.

In one embodiment, an oxygen sensor **518** is mounted on the integrated manifold **512** and ported directly into a product gas flow passage in the manifold **512**. The oxygen sensor **518** is configured to measure the oxygen concentration in the product gas using a galvanic cell or other known devices. Mounting the oxygen sensor **518** directly on the integrated manifold **512** results in a more compact assembly as it eliminates the use of tubing and connectors that are typically required to interconnect the oxygen sensor to the PSA unit. Moreover, it also places the oxygen sensor **518** closer to the product gas stream, which is likely to improve the accuracy and response time of the sensor. In another embodiment, a breath detector **520** is also ported into the integrated manifold **512**. The breath detector **520** generally comprises one pressure transducer that senses pressure change in the product gas downstream of the product delivery valve (shown schematically in FIG. **1**) caused by inhalation and exhalation of the patient so that the gas delivery frequency can be adjusted accordingly. The breath detector **520** may also include a second pressure transducer that senses the storage vessel pressure which is used to drive the delivery of the product to the patient through the product delivery valve. The breath detector **520** ports directly into the manifold instead of tapping into the product line downstream, which obviates the need of additional tubing connections and reduces the risk of leakage.

One of the key factors in creating a usable portable concentrator is long battery life. Battery life can be extended in several ways. For example, it can be extended by decreasing the power consumption of the concentrator while maintaining an acceptable performance level, and allowing for a wider range of battery voltage, such that the concentrator can continue to operate even after the battery voltage starts to decrease. Certain preferred embodiments of the present invention incorporate a Pulse Width Modulation (PWM) current control system to accomplish both lower power consumption and a wider range of battery voltage operation.

An oxygen concentrator typically includes flow control valves, such as solenoid type valves. Existing portable concentrators typically actuate the valves by applying a control

voltage, which is at one level for ON (typically open valve) and another for OFF (typically closed valve). Such voltage controlled systems rely on well controlled voltage levels, with the ON level typically about 12 volts or more. However, in reality, many solenoid valves are actually actuated by current flow, and a high current is required to open the valve, but a much lower current is required to maintain the valve in the open position.

Referring to FIG. **5**A, the valves **120***a-n b*are actuated by a two stage PWM controlled current source **522**. In one embodiment, the controller **134** provides a digital control signal, preferably about 5 volts, a pulse train of variable duty cycle, which enables the current source. In the first stage, the current is controlled to a preset value for a preset time period so as to limit the voltage across the valve to a level which will be sufficient to guarantee rapid actuation while preventing excessive current. In the second stage, a preset current level maintains actuation of the valve while using minimum current. As is known in the art, varying the duty cycle essentially varies the amount of time the circuit is on, so PWM circuits can run on less power than always ON or OFF voltage controlled circuits, which allows for a much wider range of supply (battery) voltage. In addition, for valves **120***a-n,* the current required to actuate the valve corresponds to one value of the duty cycle, while the lower current to maintain actuation corresponds to a lower value of duty cycle. Thus the controller can achieve lower power consumption by reducing the duty cycle to the maintenance level to keep the valve open (or closed) once the valve is actuated. Valves which operate similarly, except ON corresponds to closed valve, are also contemplated by the invention.

The fan **112**, typically used for cooling, may also be actuated with a PWM current source. The power draw of the fan circuit will be less with a PWM implementation. However the savings in power may not be worth the increased circuit complexity for all applications.

The compressor **114** may also be actuated with a PWM current source. In one embodiment, a speed sensor monitors the speed of the compressor. The flow rate of the concentrator is preferably determined by the speed of the compressor. In one embodiment, the concentrator has selectable flow rate settings which correspond to duty cycle settings for the PWM current source which powers the compressor. However, particularly when the concentrator is pressurizing, the load on the compressor is typically not constant. Therefore the controller can monitor the speed sensor and maintain the compressor speed substantially constant by adjusting the duty cycle controlling the current source to compensate for variation in the speed sensor output.

Advantageously, the PSA unit **506** has many novel features which, individually and in combination, contribute to a lighter, more compact and reliable apparatus. As shown in FIG. **5**, the PSA unit **506** is mounted in the first compartment **300** which is thermally isolated from other heat generating components in the housing **206**. Thermal isolation of the PSA unit **506** substantially prevents heat degradation of the valves **514** and other components in the unit. The PSA unit **506** is also configured with integrated gas flow passages so as to substantially eliminate the use of flexible tubing, which in turn reduces the number of potential leak points. Moreover, the PSA unit **506** is designed to operate with a single, generally planar integrated manifold mounted horizontally on one end of the columns. The single manifold design reduces the amount of space the PSA unit occupies inside the housing and also reduces potential leak points. Additionally, the PSA unit **506** is configured to directly connect to a circuit board without additional wires, which further conserves space and simplifies assembly.

FIG. **6** provides a detailed view of the adsorbent bed columns **508***a*, **508***b* of the PSA unit, illustrating the novel single-ended column design briefly described above. As shown in FIG. **6**, the column **508***a* generally includes an elongated adsorbent housing **602** having an upper end **604** and a lower end **606**, each defining an opening through which gas can flow in and out of the housing **602**. The column **508***a* further includes an integrated feed tube **608** extending from the upper end **604** of the housing **602** to the lower end **606**. The feed tube **608** provides a gas passageway between the manifold and the housing **602** such that gas from the manifold can be routed through the feed tube **608** into the lower end **606** of the housing **602** and vice versa. This design eliminates the need of a second manifold for directing gas into the lower end **606** of the housing **602** and allows all flow passages in the manifold to be co-located in a single plane, which significantly reduces the number of tubing connections and potential leak points in the unit.

The feed tube **608** preferably has a relatively small internal diameter to substantially minimize head space. It is generally recognized that the feed passage in a PSA unit represents head space, which is undesirable as it penalizes system performance. In one embodiment, the feed tube **608** has an internal diameter of about 0.125 inch and the adsorbent housing **602** has a diameter of about 1.5 inch. Moreover, the adsorbent housing **602** and the feed tube **608** are preferably integrally formed in an extrusion process so as to eliminate the use of flexible tubing and reduce potential leakage. In certain embodiments, the adsorbent bed column **508***a* further includes a plurality of threaded mounting members **610** positioned adjacent the adsorbent housing **602** for mating with screws that attach the column **508***a* to the chassis and manifold. The threaded mounting members **610** are preferably co-extruded with the housing **602** and the feed tube **608** so as to simplify part construction.

As also shown in FIG. **6**, the adsorbent bed housing **602** contains an adsorbent material **612**, an upper and a lower restraining disk **614***a,* **614***b* for inhibiting movement of the adsorbent material **612**, a spring **616** that applies pressure across the upper restraining disk **614***a* to keep the disk **614***a* in position. In one embodiment, the adsorbent material **612** comprises a granular material such as zeolite that can be easily dislodged. The restraining disks **614***a-b* are preferably comprised of a frit material that can also serve as a filter for gross particulate, such as dislodged zeolite. Each restraining disk **614***a-b* has a diameter selected to form an interference fit with the internal walls of the housing **602** and has a thickness of at least about 0.2 inch, to provide some resistance to tilting of the disk, which may lead to leaks of particulate. The thickness of the disk **614***a-b* coupled with the nature of the frit material provide a tortuous path for particulate to travel through, which increases the effectiveness in trapping the particulate as compared to conventional paper filters. As also shown in FIG. **6**, the upper restraining disk **614***a* is pressed against the adsorbent material **612** by the spring **616**. The spring **616** is preferably a wave spring configured to apply substantially uniform pressure across the surface of the upper restraining disk **614***a*, so as to substantially inhibit the disk from tilting.

As also shown in FIG. **6**, the adsorbent bed column **508***a* further includes annular gaskets **616***a,* **616***b* positioned adjacent to and in sealing engagement with the ends **604**, **606** of the column **508***a* to contain the pressurized gases therein. In one embodiment, each annular gasket **616***a-b* further com-

prises an integrally formed filter portion **618***a*, **618***b* for filtering smaller particulate that cannot be captured by the restraining disks **614***a-b*. Preferably, the filter portion is capable of filtering particles greater than about 70-120 microns. In one embodiment, the gasket **616***a-b* is made of a silicone material and the filter portion **618***a-b* comprises a woven fabric, woven screen, or the like that is cast or molded together with the gasket. In another embodiment, the gasket **616***a-b* and filter portion **618***a-b* for all three columns of the PSA unit are injection molded as a single piece as shown in FIG. **6**. Preferably, the filter portion **618***a-b* is embedded in the gasket **616***a-b* so as to facilitate placement of the filter portion and ensure a reliable seal between the gasket and the filter portion. Moreover, openings **620** are formed in each gasket **616***a-b* to accommodate openings in the feed tubes and the threaded mounting members.

FIGS. **7**A and **7**B provide schematic illustrations of the adsorbent bed column **508***a* in combination with the chassis **202** and the manifold **512**, showing the manners in which gas flow is directed in and out of the column **508***a* in accordance with the single-ended column design. As shown in FIG. **7**A, feed gas **702** is directed from a feed stream **704** in the manifold **512** into an upper opening **706** of the feed tube **608**. The feed gas **702** travels downwardly through the tube **608** and is diverted by a divot **404***a* in the chassis **202** into a recess **400***a* underneath the lower end **606** of the adsorbent housing **602**. The divot **404***a*, which is pre-formed in the chassis **202**, advantageously serves as a lateral gas flow passageway so as to eliminate the need of any flexible tubing on the lower end of the column, which in turn simplifies assembly and reduces potential leak points. The feed gas **702** flows upwardly from the recess **400***a* through the lower end **606** of the housing **602** and upwardly through the adsorbent material contained in the housing **602**. The adsorbent material selectively removes one or more components in the feed gas **702** in a known manner to form a product gas **708**. The product gas **708** flows out of an upper end **604** of the housing **602** into a product stream **710** in the manifold **512**. FIG. **7**B shows the manner in which purge gas is directed in and out of the column. As shown in FIG. **7**B, purge gas **712** from a product stream **714** in the manifold **512** is directed through the upper end **604** of the housing **602** downwardly into the housing **602** to flush out the gas therein. The purge gas **712** exits the lower end **606** of the housing **602** and is channeled through the divot **404***a*. The divot **404***a* directs the purge gas **712** to flow into a lower opening **716** of the feed tube **608**. The purge gas **712** exits the feed tube **608** through its upper opening **706** and enters a waste stream **718** in the manifold **512**. As FIGS. **7**A and **7**B illustrate, the single-ended column design in conjunction with the divot formed in the chassis allow gas from a single-planed manifold to enter and exit the adsorbent housing through either the upper or lower end of the housing.

FIG. **8** provides a detailed view of the integrated manifold **512** of the PSA unit. As shown in FIG. **8**, the integrated manifold **512** generally includes an upper plate **802** and a lower plate **804**, each having grooves formed in an inner surface thereof. The grooves of the lower plate align with those of the upper plate so as to form fluid passages in the manifold **512** when the upper plate **802** is affixed to the lower plate **804**. The fluid passages may include feed gas pathways, waste gas pathways, and gas pathways interconnecting the adsorbent columns. The specific pattern of the fluid passages in the manifold can vary, depending on the particular application, although the passages of the preferred embodiment correspond to the circuit of FIG. **1**. As also shown in FIG. **8**, the upper plate **802** has a feed gas inlet **812** through which pressurized air from the compressor system is directed into the manifold **512**. The lower plate **804** has a waste gas outlet **814** through which exhaust gas is expelled from the manifold **512** and a plurality of openings to connect the fluid passages with the adsorbent columns. Solenoid valves **816** are mounted on an upper surface **818** of the upper plate **802** in a known manner to control the flow of fluid between the fluid passages and the PSA columns. Bores **820** are also formed in the upper and lower plates **802**, **804** for receiving fasteners used to mount the plates together and onto the PSA columns. In one embodiment, the plates **802**, **804** of the manifold **512** are made of a plastic material formed by injection molding and laminated together via an adhesive bond applied in a vacuum. When compared to conventional laminated manifolds that are typically constructed of machined metal plates, the integrated manifold **512** formed by injection molding is advantageously lighter and less costly to manufacture.

FIG. **9** schematically illustrates a water trap system **900** integrated in the manifold **512** for removing moisture from the feed gas prior to delivery to the columns. As shown in FIG. **9**, the water trap system **900** generally includes an integrated water trap **902** formed in the manifold **512** and in fluid communication with a feed gas pathway **904**. The water trap **902** is adapted to trap condensed water **906** in the feed gas by gravity so as to prevent the water from reaching the adsorbent bed **908**. Preferably, the water trap **902** is located in a waste gas pathway **910** such that expelled waste gas carries the condensed water out through the exhaust.

In one embodiment, the water trap **902** is configured as a recess in the lower plate **804** of the manifold **512**, extending downwardly from a section of the feed gas pathway **904** located in the upper plate **802**. The water trap **902** is positioned at a lower elevation relative to the feed gas pathway **904** so as to substantially prevent trapped water **908** from re-entering the feed gas pathway **904**. In certain embodiments, a baffle **912** is positioned in the feed gas pathway **904** to divert the feed gas flow downwardly into the water trap **902** so that the gas is required to rise upwardly to return to the feed gas pathway **904**, which substantially prevents -any condensed water from being carried past the water trap by the feed gas flow. As also shown in FIG. **9**, the water trap **902** is in line with the waste gas pathway **910** located in the lower plate **804** of the manifold **504** so that the water trap **902** can be purged by waste gas flowing through the pathway **910**. In one embodiment, the water trap **902** is located in center of a three way junction formed by the airflow passages to and from the feed valve, the exhaust valve, and the connection to the top of the column.

In operation, feed gas **914** enters the manifold **512** through the feed gas inlet **812** in the upper plate **802** and is directed through a solenoid valve **816** into the feed gas pathway **904**. The feed gas **914** flows across the recessed water trap **902** such that condensed water **906** in the feed gas **914** settles into the water trap **902** by gravity while the lighter components continue along the pathway **904** into the adsorbent bed **908**. Preferably, the water trap **902** containing the condensed water **906** is subsequently purged by gas in the waste gas pathway **910**. It will be appreciated that the integrated water trap system is not limited to the above-described embodiment. Any integrated water trap system that encompasses the general concept of forming an integrated gas flow path having a lower region where light air flows past and moisture air condenses due to gravity are contemplated to be within the scope of the invention.

FIG. **10** schematically illustrates a piloted valve system **1000** integrated in the manifold **512** for providing quick release of pressurized gas from the adsorbent columns during a PSA cycle. It is generally recognized that the efficiency of a

PSA cycle benefits from fast release of the pressurized gas within the adsorbent columns during the blow down and purge steps. However, the solenoid valves controlling gas flow from the columns to the waste gas pathway are typically limited in orifice size which in turn results in restricted flow and slowed release of the gas within the columns. To increase the flow capacity, the piloted valve system **1000** shown in FIG. **10** utilizes a solenoid valve to drive a much larger piloted valve that is embedded in the manifold and controls the waste gas flow to and from the columns.

As shown in FIG. **10**, the piloted valve system **1000** generally includes a solenoid valve **1002**, an air chamber **1004** in fluid communication with the solenoid valve **1002**, and a piloted valve **1006** that can be actuated by the solenoid valve **1002** through the air chamber **1004**. The piloted valve **1006** preferably comprises a diaphragm **1006** positioned between the air chamber **1004** and a waste gas pathway **1008**. Pressure differences between the air chamber **1004** and the waste gas pathway **1008** mechanically deflect the diaphragm **1006** to open or close the waste gas pathway **1008** to gas flow. Preferably, the diaphragm **1006** has a natural resiliency such that it is deflected away from the waste gas pathway **1008** when the air chamber **1004** is not pressurized.

In one embodiment, the diaphragm **1006** is seated in a recess **1010** that extends downwardly from an exterior surface **1012** of the upper plate **802**. An insert **1014** is mounted in the recess **1010** above the diaphragm **1006** and flush with the exterior surface **1012** of the plate **802**. The diaphragm **1006** has an outer rim **1016** that sealingly engages with an inner surface **1018** of the insert **1014** so as to form the air chamber **1004** as shown in FIG. **10**. The insert **1014** contains a plurality of openings **1020** that are in fluid communication with the air chamber **1004**. The solenoid valve **1002** is mounted above the insert **1014** and controls gas flow through the openings **1020** to the air chamber **1004**.

As also shown in FIG. **10**, the waste gas pathway **1008** is formed in the lower plate **804** of the manifold and in contact with the diaphragm **1006** through an opening **1022** formed in the inner face **808** of the upper plate **802**. To close the waste gas pathway **1008** from gas flow, the diaphragm **1006** is deflected toward a baffle **1024** positioned in the waste gas pathway **1008** and sealingly engages with the baffle **1024** so as to block off a pathway **1026** between the diaphragm and the baffle. To open the waste gas pathway **1008**, the diaphragm **1006** is deflected away from the baffle **1024** so as to allow gas to flow through the pathway **1026** and out the exhaust. It will be appreciated that the pathway **1026** controlled by the diaphragm **1006** provides a much large flow capacity for waste gas than the orifices in the solenoid valves.

In operation, pressurized purge gas **1028** from the adsorbent column flows into the opening **1022** in the upper plate **802** and pushes the diaphragm **1006** away from the baffle **1024** so as to open the path **1026** between the diaphragm **1006** and the baffle **1024** for gas flow. After the purge gas is released through the exhaust, a portion of the feed gas is directed into the air chamber **1004** via the solenoid valve **1002** to push the diaphragm against the baffle **1024** so as to close the path **1026** therebetween. Advantageously, the piloted valve system **100** allows waste gas to be released from the column through a much larger opening than the orifices contained in the solenoid valves and does not consume additional space as the valves are all incorporated in the manifold.

FIG. **11** provides a detailed view of the components inside the second compartment **302** of the housing **206**. As shown in FIG. **11**, the second compartment **302** generally contains an air circulation fan **1102**, a battery **1104**, and a compressor assembly **1106**. In one embodiment, the fan **1102** comprises a blower or other device used for forcing air circulation. The battery **1104** is preferably a lithium ion battery having a rated life of at least 2 hours. In certain embodiments, the battery may also comprise a fuel cell or other transportable electric power storage device. The compressor assembly **1106** includes a compressor **1108**, a driving motor **1110**, and a heat exchanger **1112**. In one embodiment, the compressor **1108** is preferably a non-reciprocating compressor such as a scroll compressor or a radial compressor and the motor **1110** is preferably a DC brushless motor. In certain embodiments, the compressor **1108** can also be a vacuum pump or a combination of a vacuum pump and a compressor. The heat exchanger **1112** can be in the form of aluminum coiled tubes or other common heat exchanger designs. In one embodiment, the heat exchanger **1112** has an inlet **1114** and an outlet **1116**. The inlet **1114** is in fluid communication with the compressor **1108** for receiving feed gas therefrom and the outlet **1116** is connected to the PSA unit for delivery feed gas thereto.

As also shown in FIG. **11**, the compressor **1108** rests on an upper surface **1118** of the compressor mount **406**, which is elevated above the base **208** of the housing. The driving motor **1110** attached to the compressor **1108** extends into the opening **410** in the compressor mount **406** and remains suspended therein. Moreover, the heat exchanger **1112** is positioned above the compressor **1108** and under the fan **1102**. Preferably, the fan **1102** directs an air flow against the heat exchanger **1112** to facilitate cooling of the feed gas therein. As also shown in FIG. **11**, the battery **1104** is mounted on the battery bail **414** via three pairs of guide rails **1120** formed on the battery and adapted to mate with the battery bail **414**. The distance between the guide rails **1120** becomes progressively shorter from bottom to top, with the topmost pair forming the tightest fit with the bail **414**. This facilitates mounting of the battery particularly for those with impaired dexterity. When the battery **1104** is in position, the topmost guide rails are held firmly by the bail **414** while a lower section **1130** of the battery **1104** is held firmly by the mated electrical connectors formed in the battery slot **412**.

In one embodiment, a compressor restraint **1122** is connected between the compressor **1108** and the chassis **202** to secure the compressor **1108** to the housing **206**. Preferably, the compressor restraint **1122** comprises an elastic tether that fastens the compressor **1108** to the chassis. Preferably, the chassis is fit with grooves for engaging with the compressor restraint. In one embodiment, the compressor restraint **1122** comprises two elongated legs **1124***a*, **1124***b* spaced apart in the middle and joined together in an upper end **1126***a* and a lower end **1126***b*. The upper end **1126***a* is removably attached to the compressor **1108** and the lower end **1126***b* removably attached to the chassis **202**. Moreover, the elongated legs **1124***a*, **1124***b* preferably have preformed bends which extend away from each other. These bends can be pressed toward each other to straighten the legs and increase the overall length of the compressor restraint **1122** so as to facilitate mounting and removal of the compressor restraint. Preferably, the compressor restraint does not substantially exert active force on the compressor assembly when the housing is in its upright position so as to reduce vibration coupling from the compressor to the chassis.

In another embodiment, a vibration damping member **1128** is interposed between the compressor mount **406** and the compressor **1108** to further reduce transfer of vibrational energy from the compressor to the housing. As shown in FIG. **12**, the vibration damping member **1128** comprises a grommet **1202** configured to mate with the annular compressor mount so as to provide a vibration damping mounting surface for the compressor system. Preferably, the grommet **1202** is

made of a resilient silicone material such as sorbothane and configured to absorb low vibrational frequencies produced by the compressor. In one embodiment, a first set of ribs **1204** are formed along the periphery of an upper surface **1206** of the grommet **1202** and configured to absorb vibration from the compressor. In another embodiment, a second plurality of ribs **1208** are formed on an inner surface **1210** of the grommet **1202** and configured to absorb vibration from the motor. The ribs **1204**, **1208** substantially reduce the amount of vibration transferred to the grommet **1202** which is in contact with the compressor mount. The compressor advantageously rests on the grommet without being pressed against the chassis during normal operations and is restrained by the compressor restraint only when the apparatus is tipped over on its side. The vibration damping member **1128** is advantageously configured to reduce transfer of vibration energy, particularly low frequency vibration, from the compressor system to the housing, thus reducing noise created by vibration of the housing.

In addition to vibration control features, the apparatus also incorporates one or more thermal management systems to provide cooling for temperature sensitive components inside the housing and facilitate heat dissipation. FIG. **13** illustrates a thermal management system of one preferred embodiment adapted to provide cooling for the battery. A thermal sleeve **1302** is positioned around the battery **1104** to isolate air surrounding the battery **1104** from higher temperature air in the second compartment **302** of the housing. A lower end **1304** of the thermal sleeve **1302** is configured to mate with the battery slot **412** so as to close off the lower opening of the sleeve and form a compartment or air pocket for the battery. A cooling gas is preferably directed into the space between the thermal sleeve **1302** and the battery **1104** to facilitate dissipation of heat generated by the battery and also to insulate the battery from heat generated by other components in the housing.

In one embodiment, a conduit **1306** extends from the exhaust outlet **814** of the PSA unit **506** to an opening **1038** in the battery slot **412**. The conduit **1306** directs exhaust gas **1312** from the PSA unit **506** into the space between the thermal sleeve **1302** and the battery **1104**. Since the exhaust gas is typically cooler than ambient air surrounding the battery compartment, it serves as an efficient source of cooling air for the battery. The exhaust gas enters the thermal sleeve **1302** from the lower opening **1308** in the battery slot **412** and circulates out of the upper end **1310** of the thermal sleeve **1302**.

As also shown in FIG. **13**, a circuit board **1314** is mounted horizontally on the PSA unit **506**, above the valves **816** on the manifold **512**. The circuit board **1314** comprises control circuitry which governs the operation of the PSA unit, alarms, power management system, and other features of the apparatus. As described above, contacts on the circuit board **1314** are in direct electrical contact with mating contacts **516** on the valves **514** of the PSA unit **506**, which conserves space and eliminates the need for wiring connections. In one embodiment, the circuit board **1413** has small through-hole connectors that align with the location of valve pins to establish electrical interconnection.

As will be described in greater detail below, the circuit board **1314** is located in the path of a directed air flow inside the housing so as to facilitate heat dissipation of the circuits during operation. Moreover, although the control circuitry is substantially entirely within the first compartment **300**, the circuit board **1314** extends horizontally from the first compartment **300** to the second compartment **302**, substantially covering the upper openings of both compartments so as to inhibit migration of higher temperature air from the second compartment **302** into the first **300**. In one embodiment, foam material is placed between the outer edges **1316** of the circuit board **1314** and the inner walls of the housing to form an air seal which further inhibits migration of air between the compartments **300**, **302**. In another embodiment, the circuit board **1314** is shaped to mirror the cross-sectional contour of the housing so as to ensure an effective seal between the circuit board **1314** and housing.

FIG. **14** schematically illustrates a thermal management system of another preferred embodiment, which is configured to provide a continuous flow of cooling air across the components inside the housing. As shown in FIG. **14**, ambient air **1402** is drawn into the housing **206** through an air inlet **1404** by the fan **1102**. The air inlet **1404** is preferably located in a lower portion of the sidewall **212***c* adjacent the first compartment **300**. The ambient air **1402** is direct to flow through an air flow passageway **1406** generally defined by the walls of the housing and the components therein. The air flow passageway **1406** is preferably a circuitous path extending from the air inlet **1404**, through the first and second compartments **300**, **302**, to an air outlet **1408** located in a lower portion of the sidewall **212***a* adjacent the second compartment **302**. Preferably, the ambient air is directed to flow across the first compartment, which contains temperature sensitive components, before entering the second compartment which contains heat generating components. As will be described in greater detail below, the thermal management system utilizes the air circulation fan **1102** in combination with the configuration of the housing and placement of components therein to produce a one-way flow passageway for air from inlet to outlet. As such, heated air is not re-circulated back into the system and the components are cooled by a continuous stream of external air.

In one embodiment, the air flow passageway **1406** has an upstream portion **1408** and a downstream portion **1410**. The upstream portion **1408** includes a vertical path **1406***a* generally defined by the PSA unit **506** and the sidewall **212***c* of the housing **206** followed by a horizontal path **1406***b* generally defined by the circuit board **1314** and the upper wall **210**. The downstream portion **1410** includes a vertical path **1410***a* generally defined by the partition **304** and the battery **1104**, a horizontal path **1410***b* generally defined by the compressor assembly **1106** and the base **208** of the housing, and followed by another vertical path **1410***c* defined by the battery **1104** and the sidewall **212***a*. Air in the upstream portion **1408** of the passageway **1406** preferably has a lower temperature than air in the downstream portion **1420** where most heat generating components are located. Temperature sensitive components such as the valves **514** and electrical components disposed on the circuit board **1314** are advantageously disposed in the upstream portion **1408**, thereby exposing the valves and components to a continuous stream of incoming cooling air, which reduces their thermal load. Preferably, the upstream portion **1408** of the air flow passageway **1406** is thermally isolated from the downstream portion **1410** by the partition **304** and the circuit board **1314** in conjunction with a directed air flow described below.

As also shown in FIG. **14**, the fan **112** is located in the downstream portion **1410** of the air flow passageway **1406** immediately above the compressor assembly **1106**. The fan **112** generates a downward air stream directly against the compressor assembly **1106** to facilitate heat dissipation of the heat exchanger and compressor. The air stream flows past the compressor assembly **1106** through the downstream portion **1410** of the air passageway **1406** and exits the housing **206** through the air outlet **1408**. The fan **1102** is advantageously positioned to focus a cooling air stream directly on the heat generating components inside the housing. Moreover, por-

tions of the air stream warmed by the compressor assembly are not re-circulated inside the housing, which substantially minimizes increases in the ambient temperature therein and improves cooling efficiency. The air stream generated by the fan **1102** creates a negative pressure in the upstream portion of the passageway **1406**, which draws ambient air through the passageway **1406** from the first compartment **300** to the second compartment **302** as shown in FIG. **14**. Although some turbulence of the air may occur downstream of the fan, the air path configuration permits substantially one way air flow along the path between the intake and the fan.

In certain embodiments, noise reduction features are also implemented in the apparatus. As shown in FIG. **14**, a series of sound absorbing baffles **1412** are positioned along the air flow pathway **1406** to reduce noise caused by the air flow inside the housing. Moreover, the air flow passageway is configured with a circuitous path so as to further abate the noise generated by the air flow. The circuitous path advantageously provides for air movement through the housing, but makes it difficult for sound to propagate or reflect off internal surfaces of the housing and make its way out of the housing.

FIG. **15** schematically illustrates the manner in which intake air **1500** is processed through the components of the apparatus. As shown in FIG. **15**, intake air **1500** is drawn through the air intake **502**, through the air filter **504** into an inlet port **1404** of the compressor **1108**. Air is preferably drawn into the compressor air intake at a flow rate of no greater than about 15 slpm so as to maintain a low noise level and low power consumption throughout the system. The air is pressurized by the compressor **1108** and delivered to the heat exchanger **1112** through the compressor outlet **1406**. The pressurized air is cooled by the heat exchanger **1112** and then supplied as feed gas to the PSA unit **506**. Feed gas is directed through the inlet port **812** of the PSA unit **506**, into adsorbent columns **508***a-b* to produce a product gas in accordance with a PSA cycle, preferably the six step/two bed cycle described above. Product gas from the adsorbent columns **508***a-b* flows into the storage column and is delivered to the patent through an outlet port **1408** in the manifold **512** connected to the storage column. Preferably, the product gas is delivered to the patient at a flow rate of between about 150 ml/minute and 750 ml/minute and having an oxygen concentration of at least 87%, more preferably between 87%-93%.

FIG. **16**A shows the apparatus as fully assembled in the form of a portable oxygen concentrator unit **1600**. The unit **1600**, including the housing and components therein, has a combined weight of preferably no than about 10 pounds and produces a noise level of no greater than about 45 dB external to the unit. As shown in FIG. **16**A, an air scoop **1602** is integrally formed in the sidewall **212***c* of the shell **204** adjacent the air outlet **1408** to channel air flow out of the housing **206**. A similar air scoop is also formed in the sidewall adjacent the air inlet (not shown) to channel ambient air into the housing. As described above, the sidewalls **212***a,c* of the housing have a curved configuration so as to discourage users from resting the housing against the sidewall, which can block the air inlet or outlet.

As also shown in FIG. **16**A, a user interface panel **1602** containing a plurality of system controls **1604** such as flow rate and on-off switches is integrally formed in the shell **204**. In some embodiments, an I/O port **1606** is preferably formed in the user interface panel **1602**. The I/O port allows data transfer from the unit to be performed simply by using a complementary device such as a palm desktop assistant (PDA) or laptop computer. Moreover, an in-line filter system **1608** is also formed in the shell **204** to filter product flow in line prior to delivery to the patient. As will be described in detail below, the in-line filter system **1608** is integrated in the shell **206** of the unit so as to provide easy access to the filter without requiring opening of the shell.

As shown in FIG. **16**B, the in-line filter system **1608** includes an annular chamber **1610** formed in the shell **204** and a fitting **1612** that engages with the chamber **1610** from outside of the shell. The chamber **1610** has a seat portion **1612** configured to receive a disk filter **1614** and a threaded portion configured to engage with the fitting **1612**. Preferably, the chamber **1610** is molded into the shell **204** and oxygen product inside the housing is ported to the chamber. In one embodiment, the disk filter **1614**, preferably a 10 micron or finer filter, is held in compression in the seat portion **1612** of the chamber by the fitting **1612**, which threadably engages with the chamber **1610** from outside of the shell. In another embodiment, the fitting **1612** also contains a hose barb **1618** used to connect the cannula. Advantageously, the disk filter **1614** can be serviced by simply unscrewing the fitting **1612**, replacing the filter **1614**, and then re-screwing the fitting **1612** without ever having to open the housing of the unit. As shown in FIG. **16**C, the unit **1600** also includes a removable hatch **1620** that provides simplified access to the circuit board **1314** inside the housing **206** and the internal connections to the oxygen product line and power input.

FIG. **17** schematically illustrates a satellite conserver system **1700** that can be used in conjunction with the oxygen concentrator unit **1600** to deliver oxygen to users. It is generally recognized that oxygen concentrators deliver a finite rate of oxygen product which must be metered to the user through a conserving device. A conserving device is typically mounted inside the concentrator and includes a breath sensor that senses breath inhalation of the user to determine the timing and quantity of each bolus delivery. The sensitivity of the breath sensor is significant to the efficacy of the conserving device. As such, most conserving devices require that users use no longer than a 10 feet tube connected to the nasal cannula to ensure that the conserving device inside the concentrator can accurately sense the breath of the user.

The satellite conserver **1700** is configured to substantially remove the constraint imposed by the short tube requirement and allow users the freedom to move in a much larger area around the portable concentrator. As shown in FIG. **17**, the satellite conserver **1700** includes a small, lightweight conserving device **1702** for delivering oxygen rich product gas to users in metered amounts in a known manner in response to sensed breath. The conserver **1700** includes a breather sensor **1701** for sensing the user's breath and a delivery valve **1703** for delivering oxygen to the user. In one embodiment, the conserving device **1702** utilizes a breath rate algorithm that delivers a nearly constant amount of oxygen per minute, regardless of the breath rate of the patient. As such, patients who take more breaths within a give time period receive the same amount of oxygen as those who take less breaths. In another embodiment, the conserving device adjusts the bolus volume based on the flow setting rather than the breathing rate. In yet another embodiment, the conserving device **1702** can be fit with a second pressure sensor, which detects the pressure in the input line from the concentrator. The delivery valve timing can be adjusted based on the sensed pressure at the end of the input line such that a higher pressure corresponds to a shorter valve open time and a lower pressure corresponds to a longer valve open time.

As also shown in FIG. **17**, the conserving device **1702** is adapted to be worn by the user or positioned adjacent to the user so that breath sensing functions can be performed proximate to the user even if the concentrator unit is far away. Thus, the sensitivity of the breath sensor is not compromised even if

the user is far way from the unit. The satellite conserver **1700** further includes flexible tubing **1704** connecting the conserving device **1702** to the hose barb fitting **1612** on the concentrator **1600**. In one embodiment, the tubing **1704** is preferably between 50 to 100 feet, which provides users a much greater radius of mobility. When the satellite conserver **1700** is in use, the breath detector mounted inside the housing of the concentrator is disabled. As also shown in FIG. **17**, the satellite conserver can be worn on the person by a clip **1706** attached to the conserving device **1702**. The satellite conserver advantageously permits the user to move around the vicinity of the concentrator, preferably in at least a 50 to 100 feet radius, without detracting from the efficacy of the unit.

To further add to the convenience of the patient, it is desirable to add in some level of patient control of the concentrator functionality in the satellite conserver **1700**. For cases where the patient is using a long hose between the satellite conserver and the concentrator, it is advantageous to allow the patient to change some settings without the necessity of returning to the concentrator base unit. One of the most useful settings to adjust at the conserver is flow rate. If the patient for some reason requires a higher flow rate due to increased exertion while operating at a large distance from the base unit, it would be a problem to require the patient to return to the base unit to obtain a higher flow of oxygen rich air. As shown in FIG. **17**A, the satellite conserver device **1700** of certain preferred embodiments includes a patient interface **1708** that allows the patient to change flow rate. One embodiment of this interface is a flow setting knob which selects from several flow rate settings. In one embodiment, the knob interfaces to a timing circuit **1710**. The timing circuit **1710** controls how long a flow valve **1712** is open. Thus when the breath sensor **1701** detects a breath, the flow valve **1712** is opened for a time determined by the knob setting. In certain embodiments, the conserver requires a battery **1714** to power the timing circuit sensor **1710** and valve **1712**.

FIG. **18**A schematically illustrates a mobility cart **1800** configured to transport an oxygen concentrator unit for users traveling away from home. As shown in FIG. **18**A, the mobility cart **1800** includes a generally rectangular frame **1802** attached to a plurality of wheels **1804** so as to permit rolling movement of the frame **1802** over the ground. As also shown in FIG. **18**A, the frame **1802** has a support portion **1806** adapted for receiving an oxygen concentrator unit and a handle portion **1808** extending upwardly from the support portion **1806** for users to hold when moving the cart. The support portion **1806** preferably contains a compartment **1810** configured to seat the oxygen concentrator and at least two slots **1812** configured to seat and secure spare batteries. In one embodiment, a battery bail **1814** is placed in each slot **1812** for securing the batteries in the manner described above. In another embodiment, a small recess **1816** is formed in the back of the compartment **1810** for holding the satellite conserver, spare cannulas or filter.

As also shown in FIG. **18**A, the mobility cart **1800** further includes an on-board power supply **1818** that is attached to the frame **1802** portion. Preferably, the power supply **1818** has an AC power input and is adapted to power charging terminals fitted in each battery slot **1812** and a terminal fitted in the compartment for charging the battery within the concentrator. In one embodiment, the cart also has an adapter plug **1820** that extends from the power supply **1818** and mates with the concentrator's DC power input jack. The power supply **1816** is preferably sufficient to power both battery chargers while simultaneously powering the concentrator unit and charging the battery mounted inside the unit. Each battery preferably has a rated life of at least 2 hours so that the user is able to enjoy continuous use of the concentrator unit for at least six hours without an external power source. In one embodiment, the power supply is cooled by a fan mounted on the frame portion **1802**. In another embodiment, the frame portion has recesses through which water may drain out without damaging the parts. The cart **1800** can further comprise an integrated power cord and/or retractable power cord that is adapted to be plugged into a wall.

FIG. **18**B illustrates the manner in which the oxygen concentrator **1600** and spare batteries **1822** are positioned in the mobility cart. As also shown in FIG. **18**B, the handle **1808** has two telescoping rails that can be extended and retracted. When the handle **1808** is the fully retracted position as shown in FIG. **18**B, the mobility cart **1800** preferably has a height of about 14-18 inches and can be stored in a small area such as under an airplane seat. In one embodiment, the mobility cart is structured such that the concentrator, when sitting in the cart, interfaces closely with seals positioned on the frame of the cart at the air intake and exhaust ports. As such, airflow coming into or out of the concentrator actually travels through the frame in some manner, adding extra sound attenuation by increasing the tortuosity of the flow path. Moreover, an auxiliary fan or blower mounted in the cart can also be used to circulate this air further. Advantageously, the mobility cart has integrated battery chargers and power supply incorporated in one unit so as to obviate the need for users to pack power supplies or external chargers when traveling with their concentrator. Moreover, the cart provides a single compact unit in which all oxygen concentrator related parts can be transported, which allows users greater ease of mobility when traveling.

FIGS. **19**A-E illustrate a battery pack **1900** configured to provide electrical power to a portable oxygen concentrator of one preferred embodiment of the present invention. As shown in FIG. **19**A, the battery pack **1900** has a generally U-shaped body **1902** containing one or more batteries therein, a handle portion **1904** configured to facilitate installation and removal of the battery pack **1900**, and a contact protrusion **1906** configured to electrically couple the battery pack **1900** to power contacts on the portable oxygen concentrator. As will be described in greater detail below, the U-shaped body **1902** facilitates proper alignment of the battery pack **1900** to the oxygen concentrator during installation and also helps heat dissipation of the batteries enclosed therein.

FIG. **19**B provides an exploded view of the battery pack **1900**. As shown in FIG. **19**B, the battery pack **1900** generally includes a casing **1908** having two opposing sections **1910***a*, **1910***b* and a plurality of battery cells **1912** disposed within the casing **1908**. The two opposing sections **1910***a*, **1910***b* of the casing **1908** can be joined together by snap fitting, adhesive or other suitable methods. As also illustrated in FIG. **19**B, the battery cells **1912** are stacked in a two deep and side-by-side array along a non-linear path, which arrangement facilitates heat dissipation of the batteries without substantially increasing the footprint of the battery pack. In one embodiment, twelve rechargeable lithium ion battery cells **1912** are supported by a base structure **1914** inside the casing **1908**. Preferably, the cells are grouped into four sets, with each set containing three cells. The sets are connected in parallel while the cells within each set are connected in series. The battery cells **1912** are also electrically connected to a power contact **1916** that extends outwardly through an opening in the casing **1908** for mating with contacts on the portable oxygen concentrator. Details related to electrical connection of the cells in the battery pack are generally known to persons skilled in the art and thus are not shown and described here. Moreover, it will be appreciated that the batteries used can also include

a variety of other known storage cell technology, such as lithium polymer cells, nickel cadmium batteries, and nickel metal hydride batteries.

Referring to FIG. **19**C, the battery pack **1900** also includes a plurality of guide rails **1918** formed on an outer surface **1920** of the battery pack **1900**. As previously discussed, the guide rails **1918** are configured to engage with a mounting structure on the oxygen concentrator, such as the bail **414** shown in FIG. **4**. Preferably, the battery pack **1900** has three pairs of guide rails **1918** with the distance between each pair becoming progressively shorter from bottom to top, with the topmost pair forming the tightest fit with the bail. In one embodiment, the distance between a pair of guide rails is between about 2 to 2.5 inches. As also shown in FIG. **19**C, the handle portion **1904** extends from an upper surface **1922** of the battery pack **1900**. Preferably, the handle **1904** has a sufficiently large surface area configured for a person to easily grab onto and exert a force against in the vertical direction. In one embodiment, the handle portion **1904** has an elongated concave section **1924** configured to receive a person's fingers so that the person can easily grab onto and lift the battery pack out of the oxygen concentrator. Preferably, the handle portion **1904** has a length of about 4.125 inches or less, a width of about 0.75 inch or less, and a height of about 0.75 inch or less

FIG. **19**D provides a cross-sectional view of the battery pack **1900**. As shown in FIG. **19**D, the battery pack **1900** has a generally U-shaped body including a center portion **1926** forming the bight of the U and two end portions **1928***a*, **1928***b* projecting from opposite ends of the center portion **1926** forming the legs of the U. The general U-shaped contour of the battery pack **1900** is further illustrated in FIG. **19**E. Referring to FIG. **19**E, the battery pack **1900** has a top portion **1930**, a bottom portion **1932**, an exterior side portion **1934**, and an interior side portion **1936**. The interior side portion **1936** includes at least a portion of the interior sidewall **1938** of the battery pack **1900**. The contour of the battery pack **1900** can be further defined by a plurality of axes.

As shown in FIG. **19**E, the battery pack **1900** has a longitudinal axis **1940**, a transverse axis **1942**, a lower transverse axis **1944**, a central lower lateral axis **1946** and a first and second end lower lateral axes **1948***a*, **1948***b*. The longitudinal axis **1940** is defined as an axis that extends through the top and bottom portions **1930**, **1932** and through the interior sidewall **1938** of the battery pack in a manner such that it is generally parallel to the side portions **1934**, **1936** and end portions **1928***a*, **1928***b* of the battery pack **1900**. The transverse axis **1942** is defined as an axis that intersects the longitudinal axis **1940** and extends through the end portions **1928***a*, **1928***b* in a manner such that it is generally parallel to the side portions **1934**, **1936** and top and bottom portions **1930**, **1932** of the battery pack **1900**. The lower transverse axis **1944** is defined as an axis that is parallel to the transverse axis **1942**, intersects the longitudinal axis **1940** and passes through the bottom portion **1932** of the battery pack **1900**. The central lower lateral axis **1946** is defined as an axis that is orthogonal to the longitudinal axis **1940** and intersects both the longitudinal axis **1940** and the lower transverse axis **1944**. The first and second end lower lateral axes **1948***a*, **1948***b* are defines as axes that are parallel to the central lower lateral axis **1944**, intersect the lower transverse axis **1944**, and pass through the respective end portions **1928***a*, **1928***b*.

In a preferred embodiment, the distance between the exterior surfaces **1950***a*, **1950***b* of the end portions **1928***a*, **1928***b* measured along the lower transverse axis **1944** is about 4.25 inches or less; the distance between the exterior surfaces **1952***a*, **1952***b* of the side portions **1934**, **1936** along the central lower lateral axis **1946** is about 1 inch or less; the distance between the exterior surfaces **1954***a*, **1954***b* of the first end portion **1928***a* along the first end lateral lower axis **1948***a* is about 1.5 inches or less; and the distance between the exterior surfaces **1956***a*, **1956***b* of the second end portion **1928***b* along the second end lateral lower axis **1948***b* is also about 1.5 inches or less.

As also shown in FIG. **19**E, the contact protrusion **1906** has a rectangular shape generally defined by two pairs of opposing sidewalls **1958**, **1960**. The sidewalls **1958**, **1960** preferably extend outwardly from the bottom portion **1932** by about ⅜ inch or more. The length of the sidewalls **1958** that are parallel to the lower transverse axis **1944** is about 1.5 inch or less. The length of the sidewalls **1960** that are parallel to the central lower lateral axis is about 0.5 inch or less. The contact protrusion **1906** is configured be received into a recess on the oxygen concentrator and mate with power contacts therein to electrically connect the battery pack to the concentrator. Alternatively, the contact protrusion **1906** can also be received into a recess formed in a mobility cart or in a separate battery charger to mate with power contacts therein. Preferably, the battery pack **1900** is symmetrical about the center lower lateral axis **1946** but asymmetrical about the lower transverse axis **1944**. The asymmetrical configuration functions as a key for users to properly align the battery pack in the oxygen concentrator.

Although the foregoing description of certain preferred embodiments of the present invention has shown, described and pointed out the fundamental novel features of the invention, it will be understood that various omissions, substitutions, and changes in the form of the detail of the system, apparatus, and methods as illustrated as well as the uses thereof, may be made by those skilled in the art, without departing from the spirit of the invention. Consequently, the scope of the present invention should not be limited to the foregoing discussions.

What is claimed is:

1. A method of extending the life of a battery used for supplying power to an oxygen concentrator, comprising:

incorporating a PWM current control system in said oxygen concentrator, wherein the PWM current control system is operatively interconnected to a current source;

providing a PWM signal to the current source; and

converting the PWM signal to a valve actuation current to control at least one current actuated flow control valve.

2. The method of claim **1**, wherein the valve actuation current comprises a first current amplitude corresponding to a value of PWM duty cycle that is sufficient to open or close the valve, and a second current amplitude which is lower than the first current amplitude and corresponds to a lower PWM duty cycle that is sufficient to maintain the valve in the open or closed state.

3. The method of claim **1**, further comprising adjusting the duty cycle of the current source to decrease the power draw from the battery at lower flow rate settings.

* * * * *