US 20050045041A1

(19) United States

(12) Patent Application Publication

(10) Pub. No.: US 2005/0045041 A1

(43) Pub. Date: Mar. 3, 2005

Hechinger et al.

(54) REMOVABLE CARTRIDGE FOR SWING-TYPE ADSORPTION SYSTEM

(76) Inventors: **Glenn R. Hechinger**, Costa Mesa, CA (US); **Robert A. Zarate**, Murrieta, CA (US)

Correspondence Address:
KNOBBE MARTENS OLSON & BEAR LLP
2040 MAIN STREET
FOURTEENTH FLOOR
IRVINE, CA 92614 (US)

(21) Appl. No.: 10/651,862

(22) Filed: Aug. 29, 2003

Publication Classification

(51) Int. Cl.[7] B01D 53/02

(52) U.S. Cl. 96/121

(57) ABSTRACT

A removable cartridge for the adsorbent bed of a swing-type adsorber system defines a volume for retaining an adsorbent material within an adsorption bed housing during operation of the adsorption system. Additionally, the cartridge is configured to retain the adsorbent material therein so that the cartridge and the adsorbent material can be removed and installed as a unit.

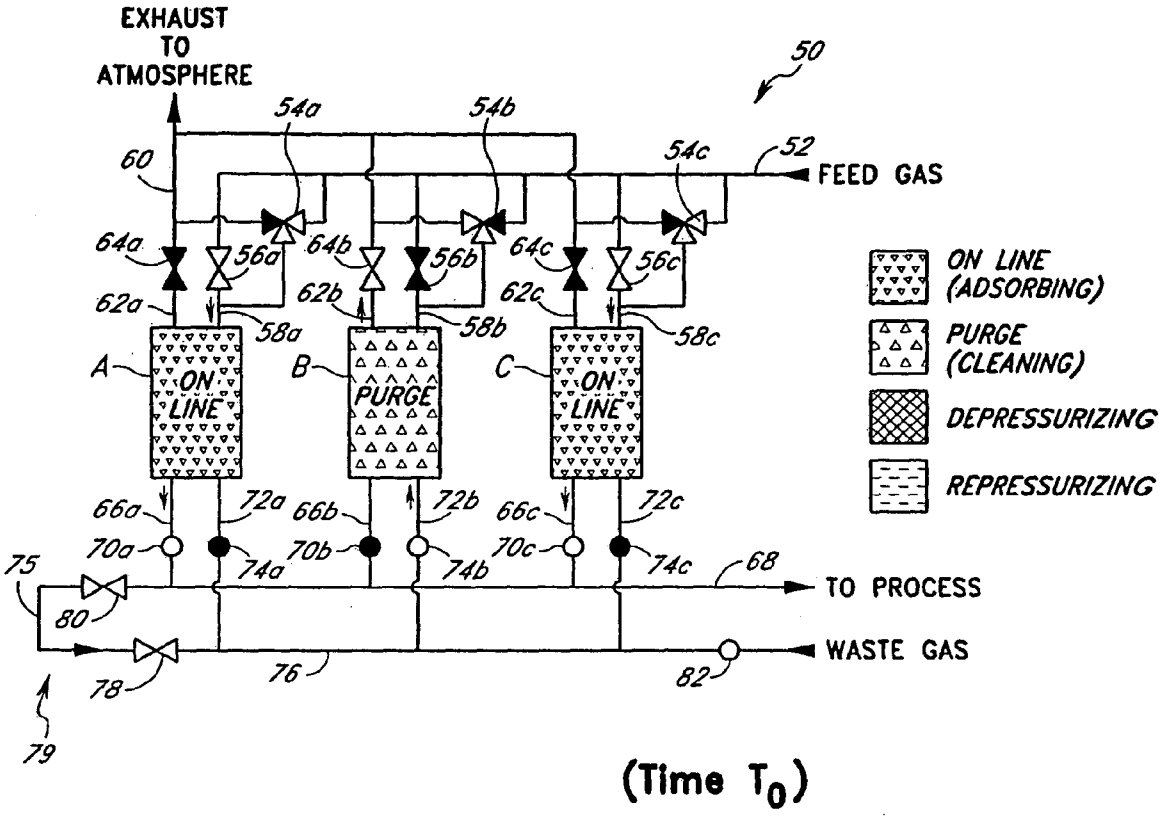

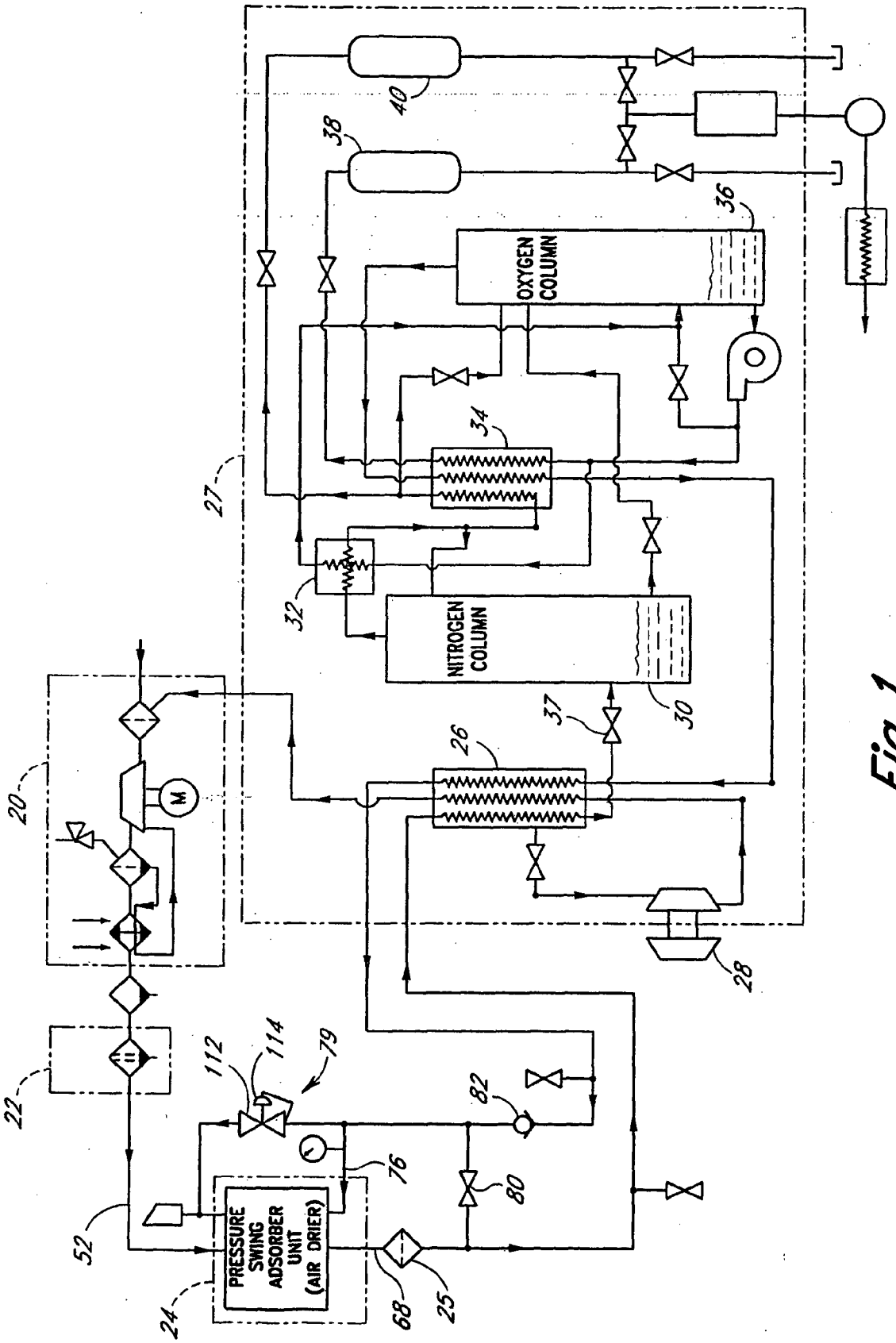
OXYGEN COLUMN
NITROGEN COLUMN
PRESSURE SWING ADSORBER UNIT (AIR DRIER)
M
20
22
24
25
26
27
28
30
32
34
36
37
38
40
52
68
76
79
80
82
112
114

Fig. 1

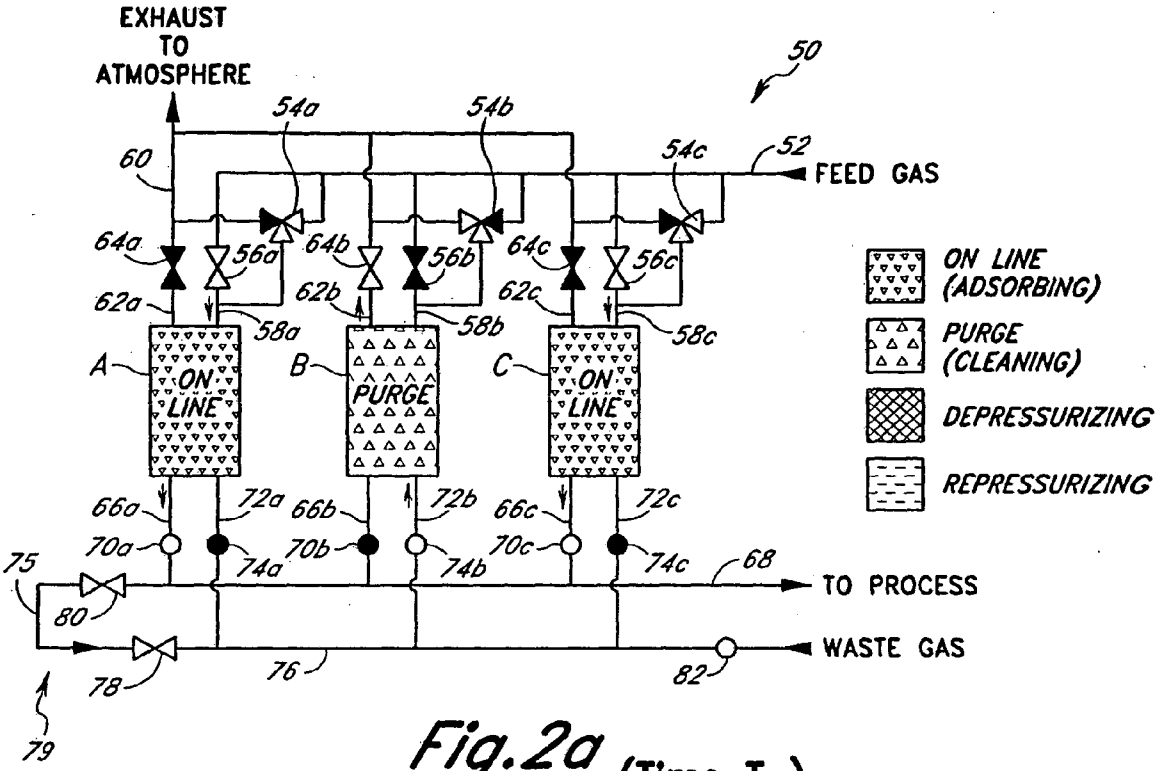

Fig.2a (Time T_0)

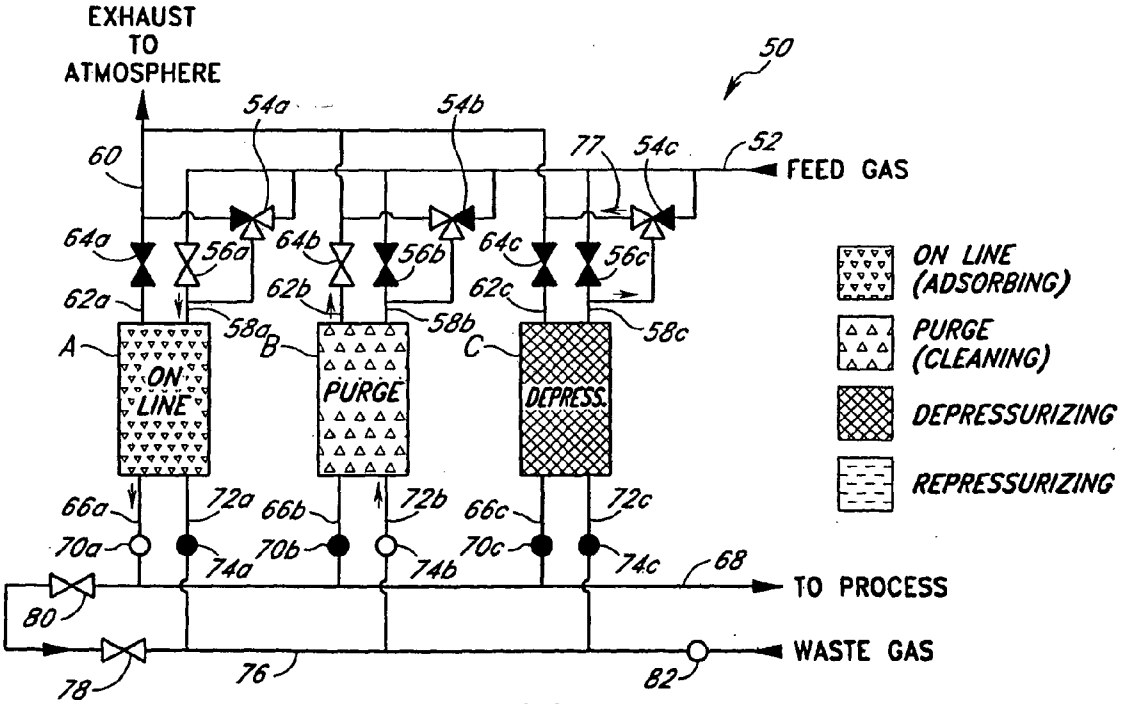

Fig.2b (Time T_1)

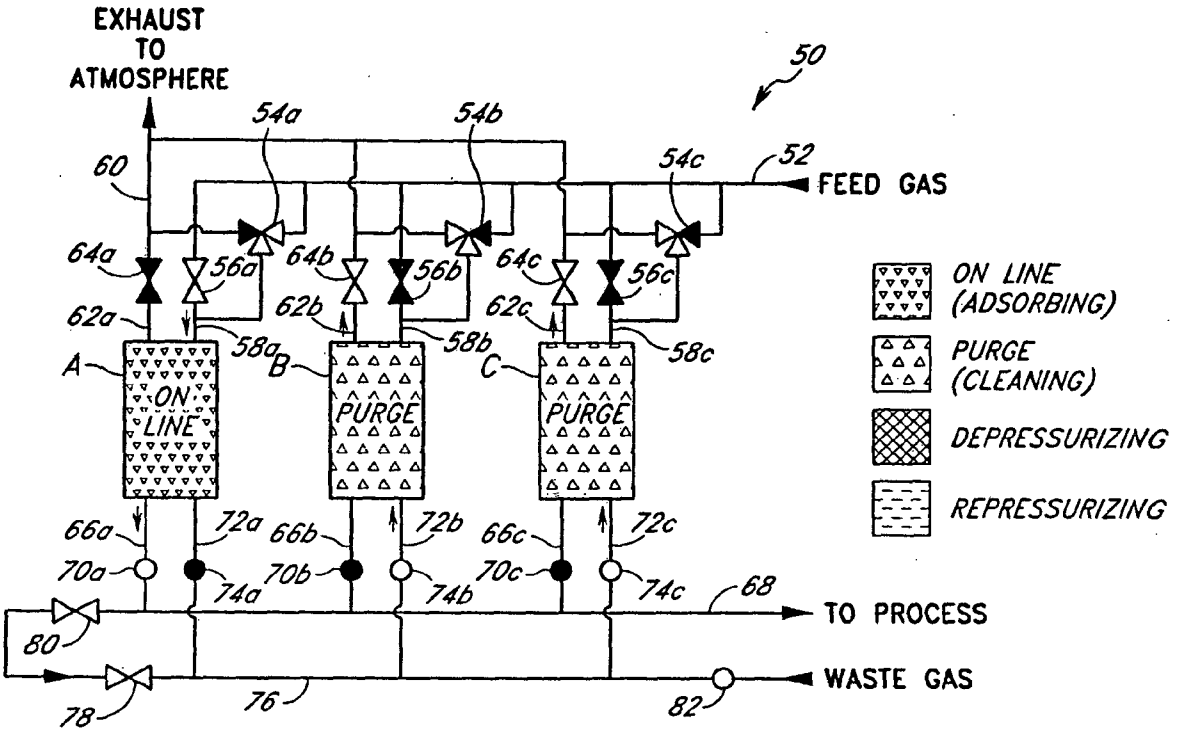

Fig.2c (Time T_2)

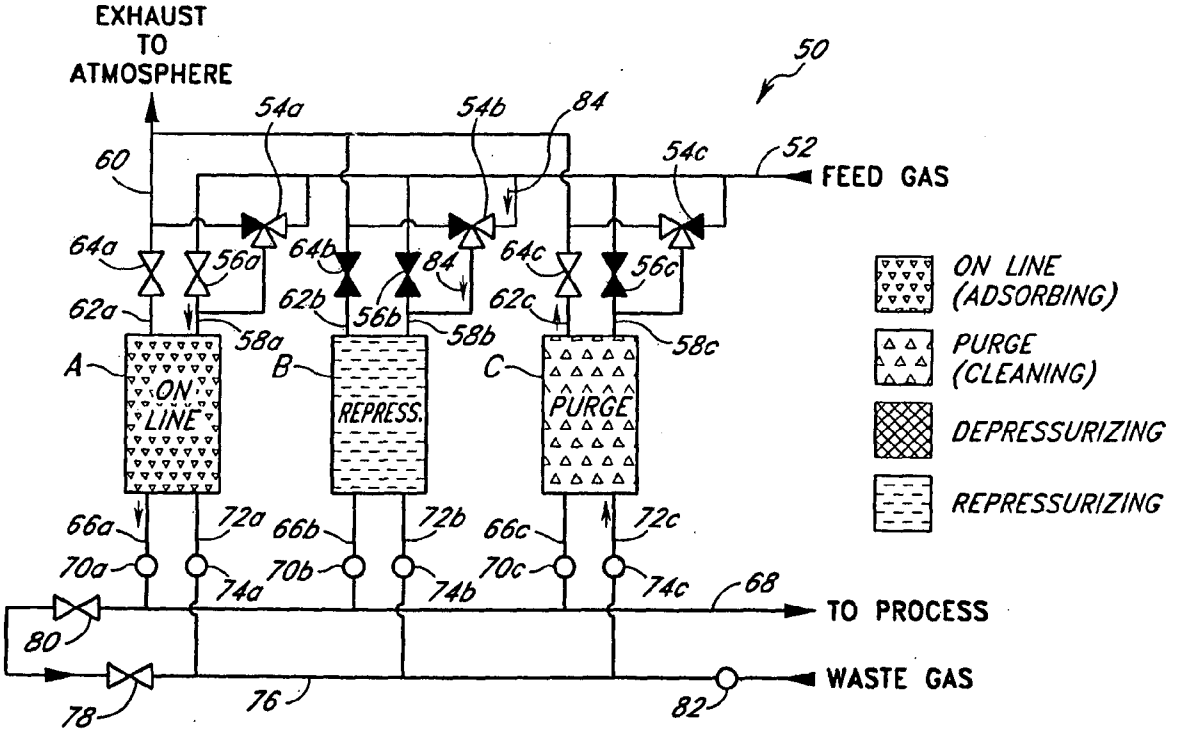

Fig.2d (Time T_3)

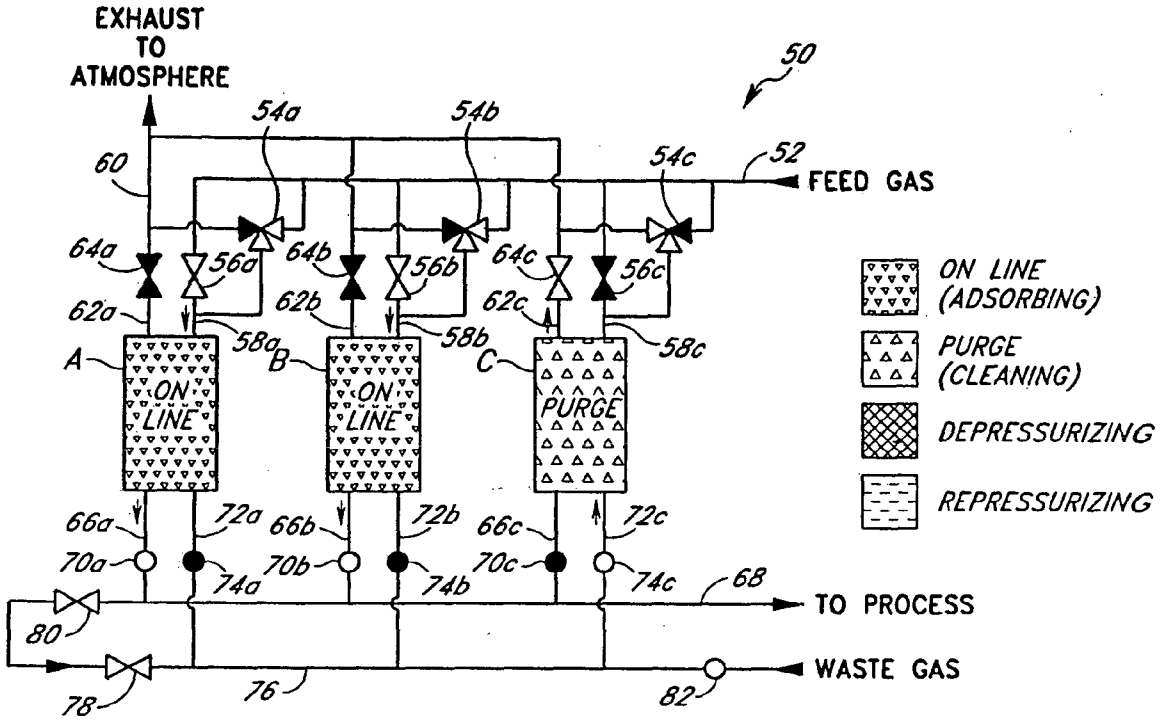

Fig.2e (Time T_4)

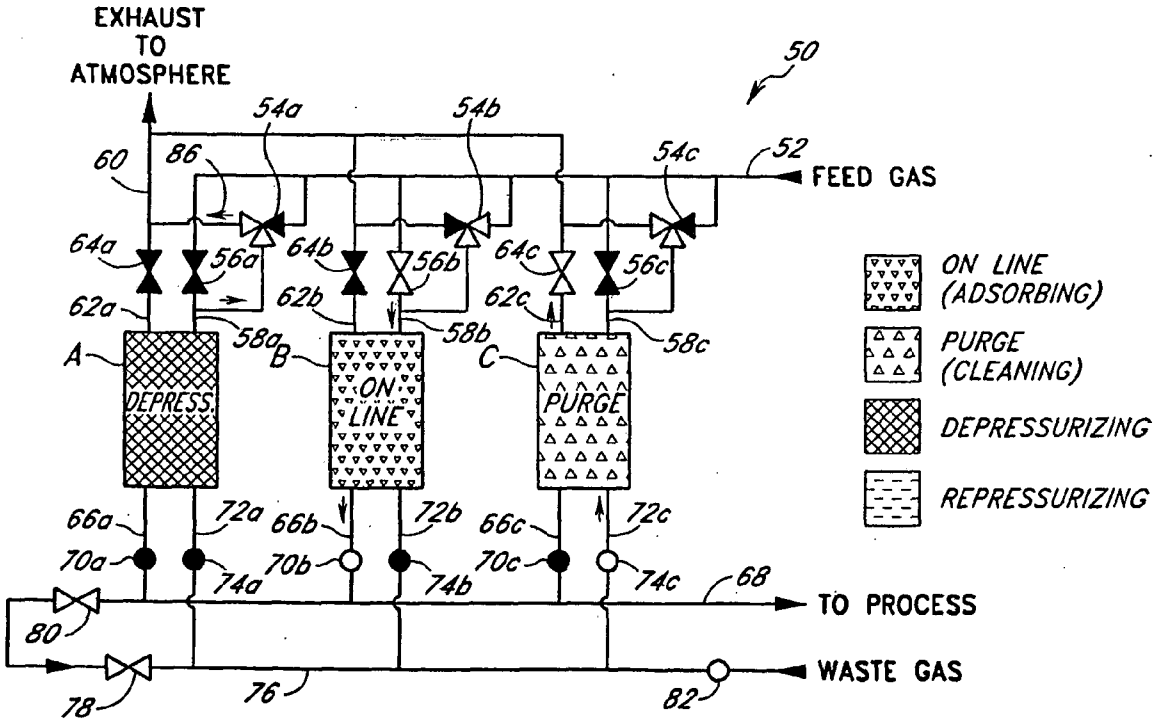

Fig.2f (Time T_5)

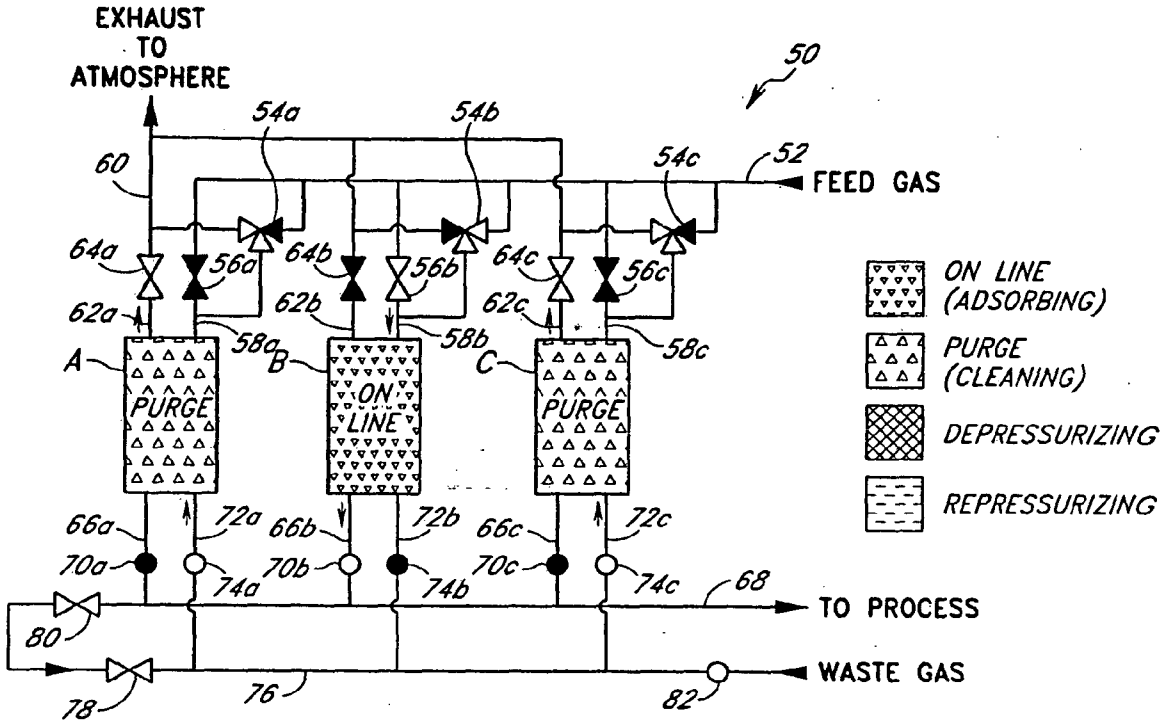

Fig.2g (Time T_6)

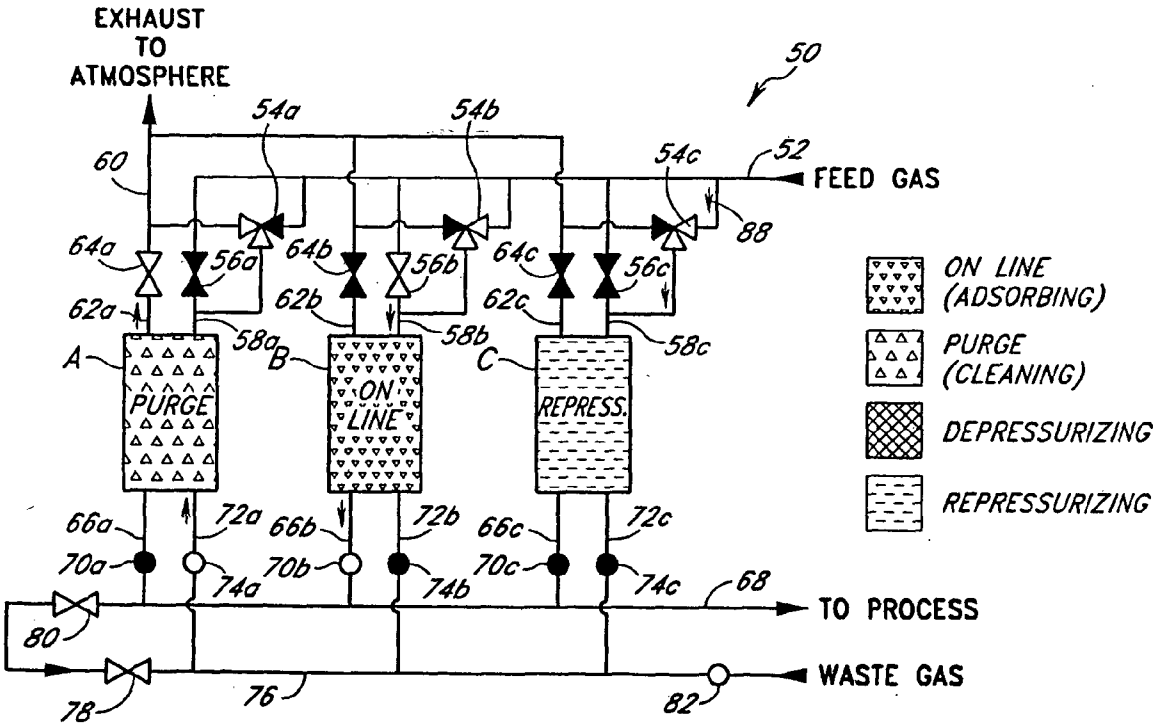

Fig.2h (Time T_7)

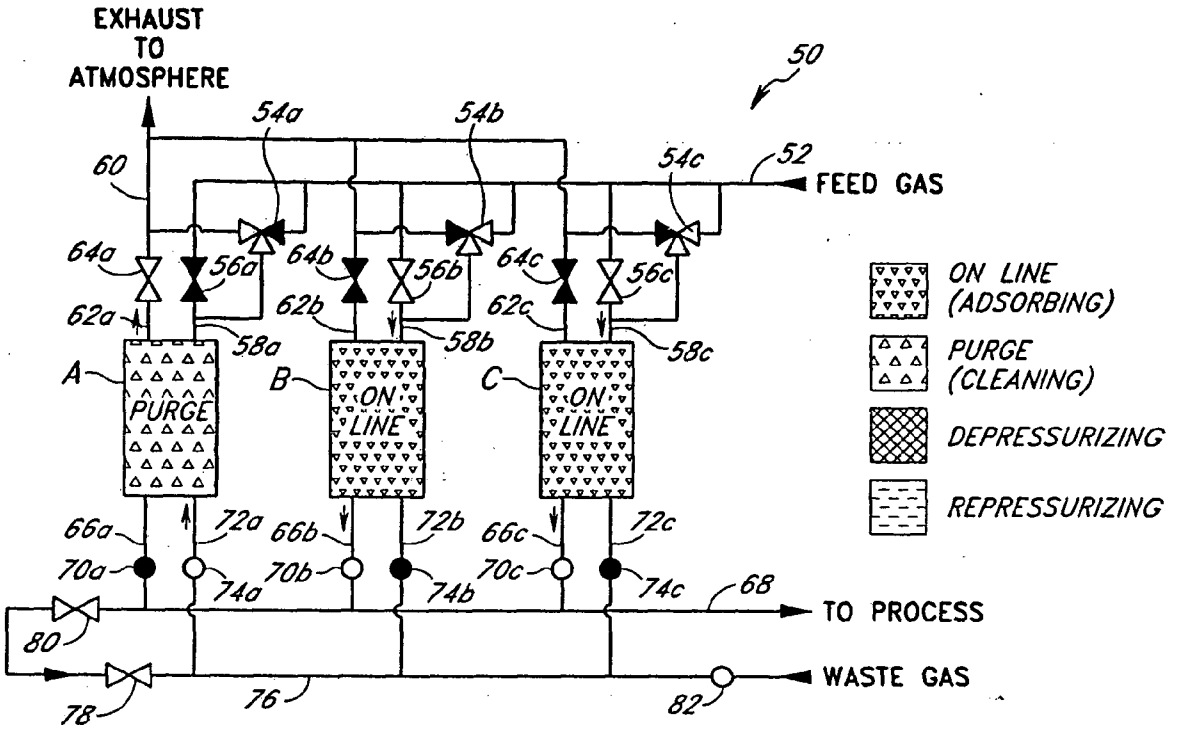

Fig.2i (Time T_8)

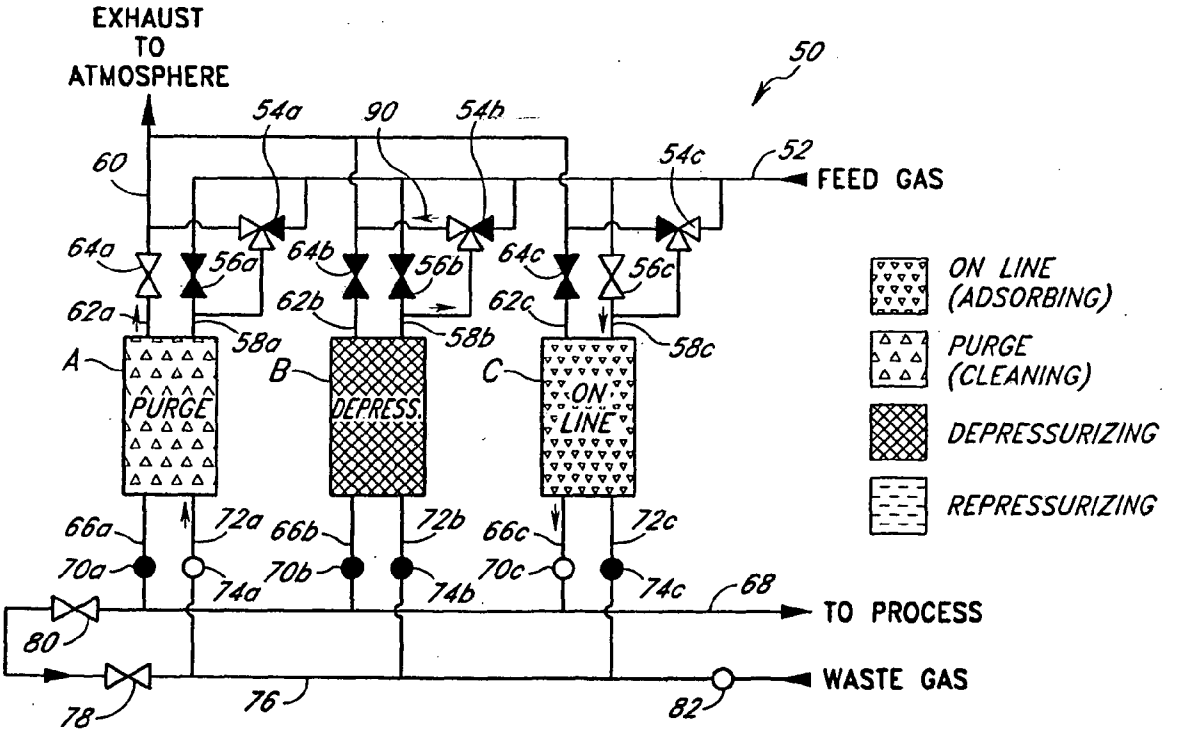

Fig.2j (Time T_9)

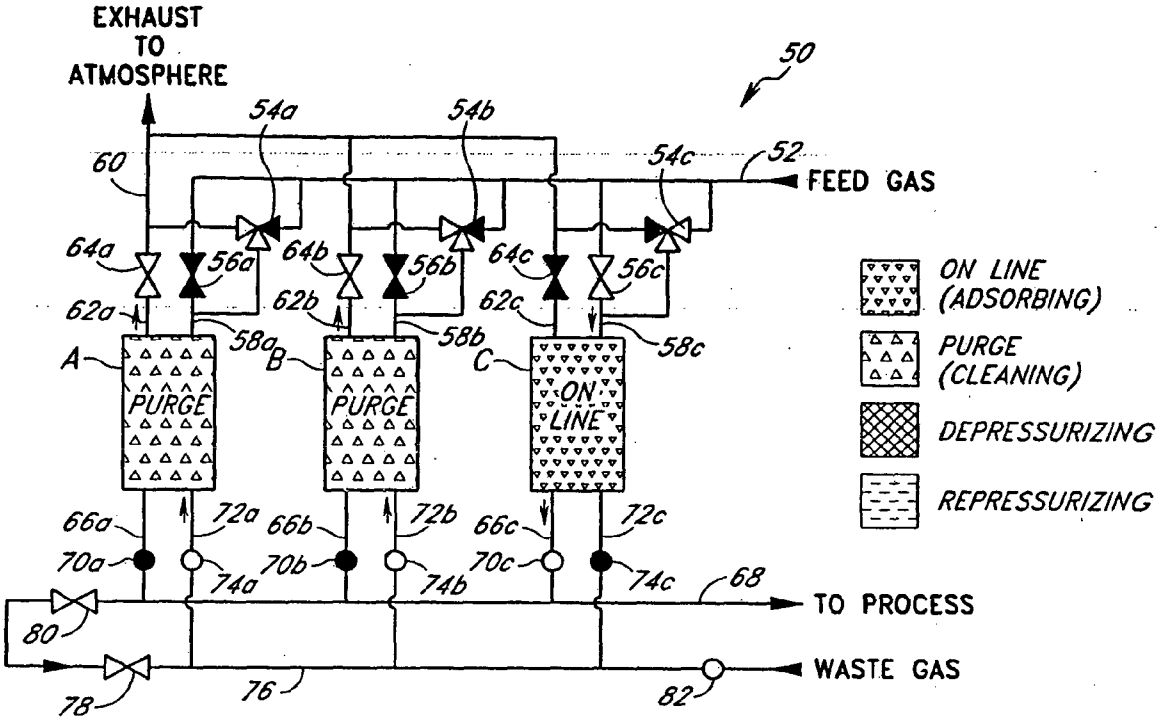

Fig.2k (Time T_{10})

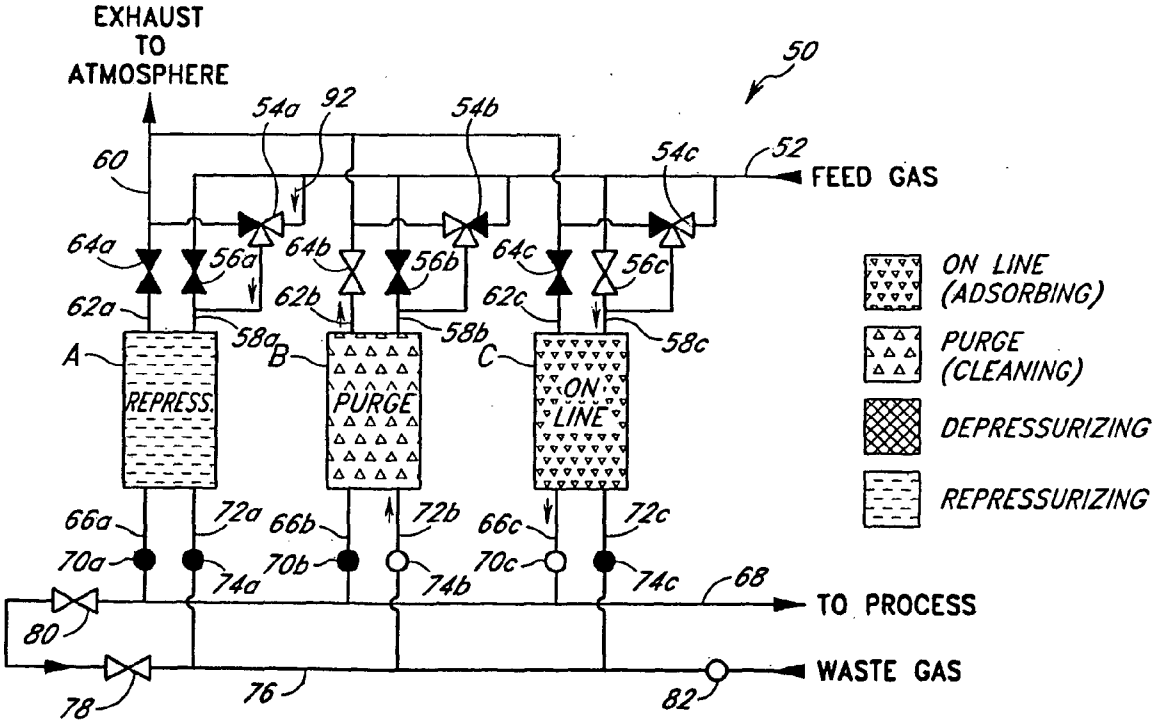

Fig.2l (Time T_{11})

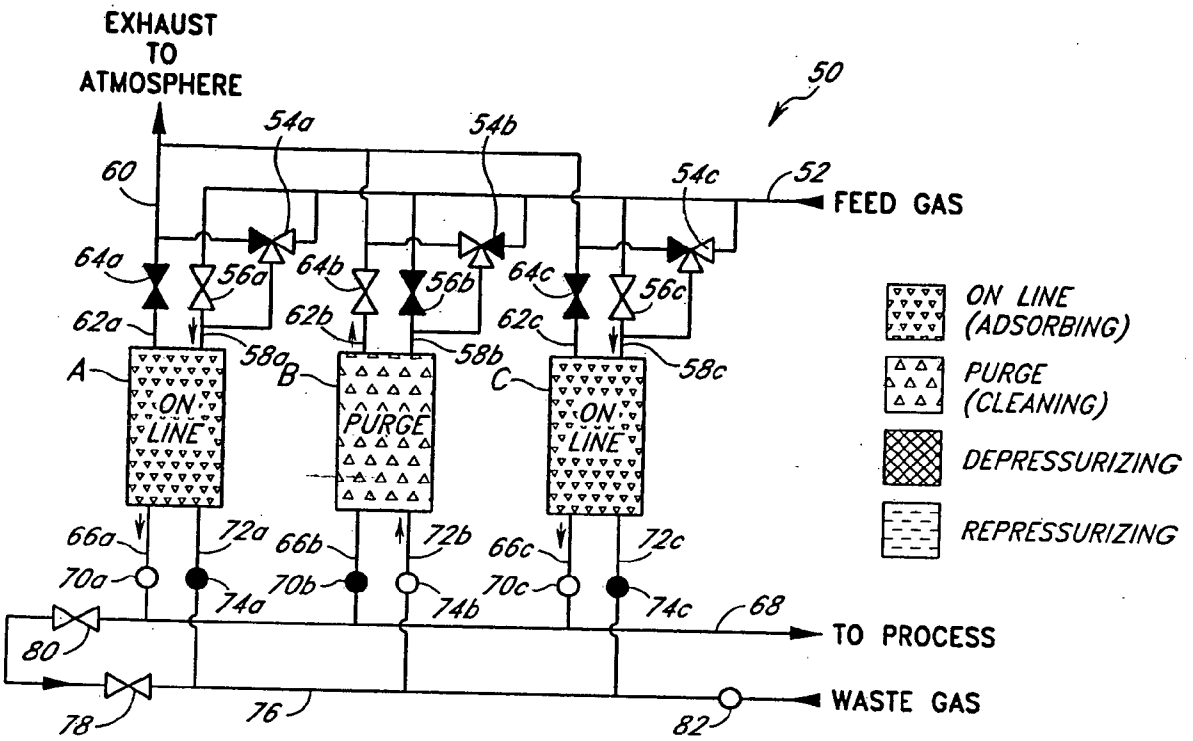

Fig. 2m (Time T_{12})

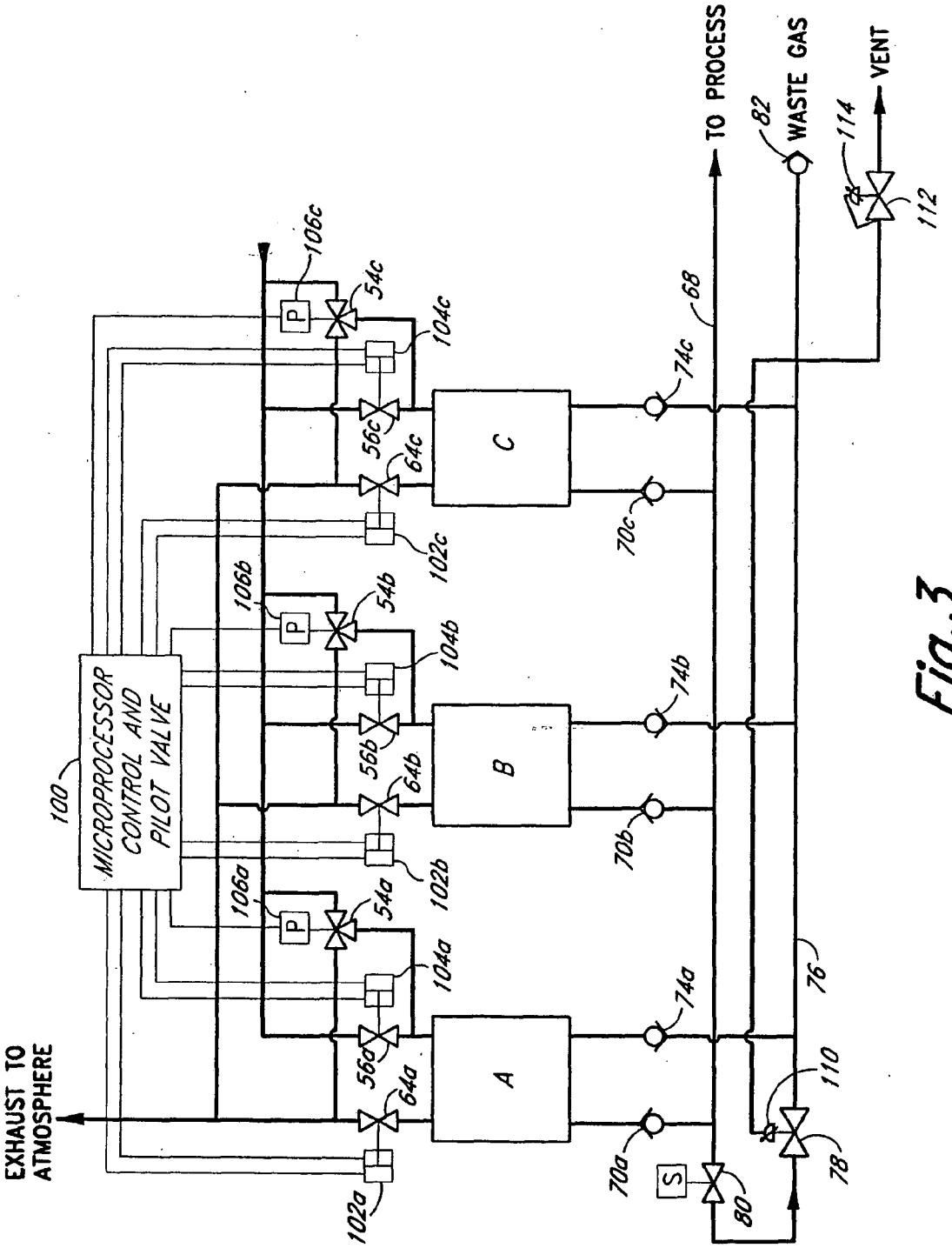
MICROPROCESSOR CONTROL AND PILOT VALVE
100
EXHAUST TO ATMOSPHERE
TO PROCESS
WASTE GAS
VENT
A
B
C
P
S
102a
102b
102c
104a
104b
104c
106a
106b
106c
54a
54b
54c
56a
56b
56c
64a
64b
64c
70a
70b
70c
74a
74b
74c
68
76
78
80
82
110
112
114

Fig. 3

VALVE NO. / FUNCTION / OUTPUT NO.		56a A-I 1	64a A-E 2	54a A-R 3	54a A-D 3	56b B-I 4	64b B-E 5	54b B-R 6	54b B-D 6	56c C-I 7	64c C-E 8	54c C-R 9	54c C-D 9
STEP	ELAPSED TIME												
0	0.0	0	X	0	X	X	0	X	0	0	X	0	X
1	0.6	0	X	0	X	X	0	X	0	X	X	0	X
2	1.2	0	X	0	X	X	0	X	0	X	X	X	0
3	20	0	X	0	X	X	0	X	0	X	0	X	0
4	70	0	X	0	X	X	X	X	0	X	0	X	0
5	70.6	0	X	0	X	X	X	0	X	X	0	X	0
6	90	0	X	0	X	0	X	0	X	X	0	X	0
7	90.6	X	X	0	X	0	X	0	X	X	0	X	0
8	91.2	X	X	X	0	0	X	0	X	X	0	X	0
9	110	X	0	X	0	0	X	0	X	X	0	X	0
10	160	X	0	X	0	0	X	0	X	X	X	X	0
11	160.6	X	0	X	0	0	X	0	X	X	X	0	X
12	180	X	0	X	0	0	X	0	X	0	X	0	X
13	180.6	X	0	X	0	X	X	0	X	0	X	0	X
14	181.2	X	0	X	0	X	X	X	0	0	X	0	X
15	200	X	0	X	0	X	0	X	0	0	X	0	X
16	250	X	X	X	0	X	0	X	0	0	X	0	X
17	250.6	X	X	0	X	X	0	X	0	0	X	0	X
18	270	0	X	0	X	X	0	X	0	0	X	0	X

Fig. 4

0 - OPEN
X - CLOSED

	ELAPSED TIME	DURATION	BED A	BED B	BED C
T_0	–	–	O	P	O
T_1	20	20	O	P	D
T_2	70	50	O	P	P
T_3	90	20	O	RP	P
T_4	–	–	O	O	P
T_5	110	20	D	O	P
T_6	160	50	P	O	P
T_7	180	20	P	O	RP
T_8	–	–	P	O	O
T_9	200	20	P	D	O
T_{10}	250	50	P	P	O
T_{11}	270	20	RP	P	O
T_{12}	–	–	O	P	O

O–online P–purge D–depressurizing RP–repressurizing

Fig. 5

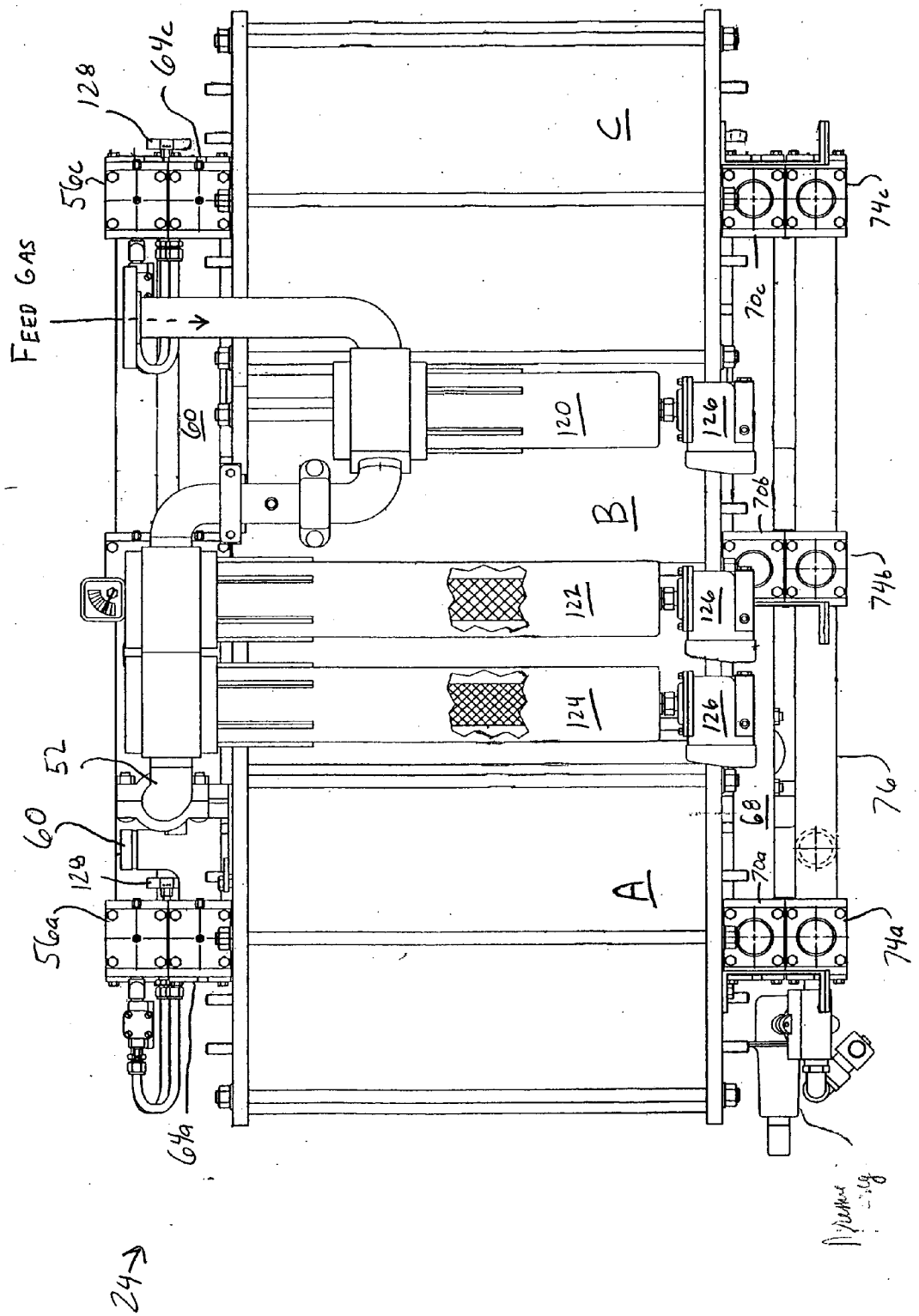
FEED GAS
128
64c
56c
C
74c
70c
60
120
126
B
70b
122
74b
124
52
76
68
60
128
56a
A
70a
74a
64a
24

FIG. 6

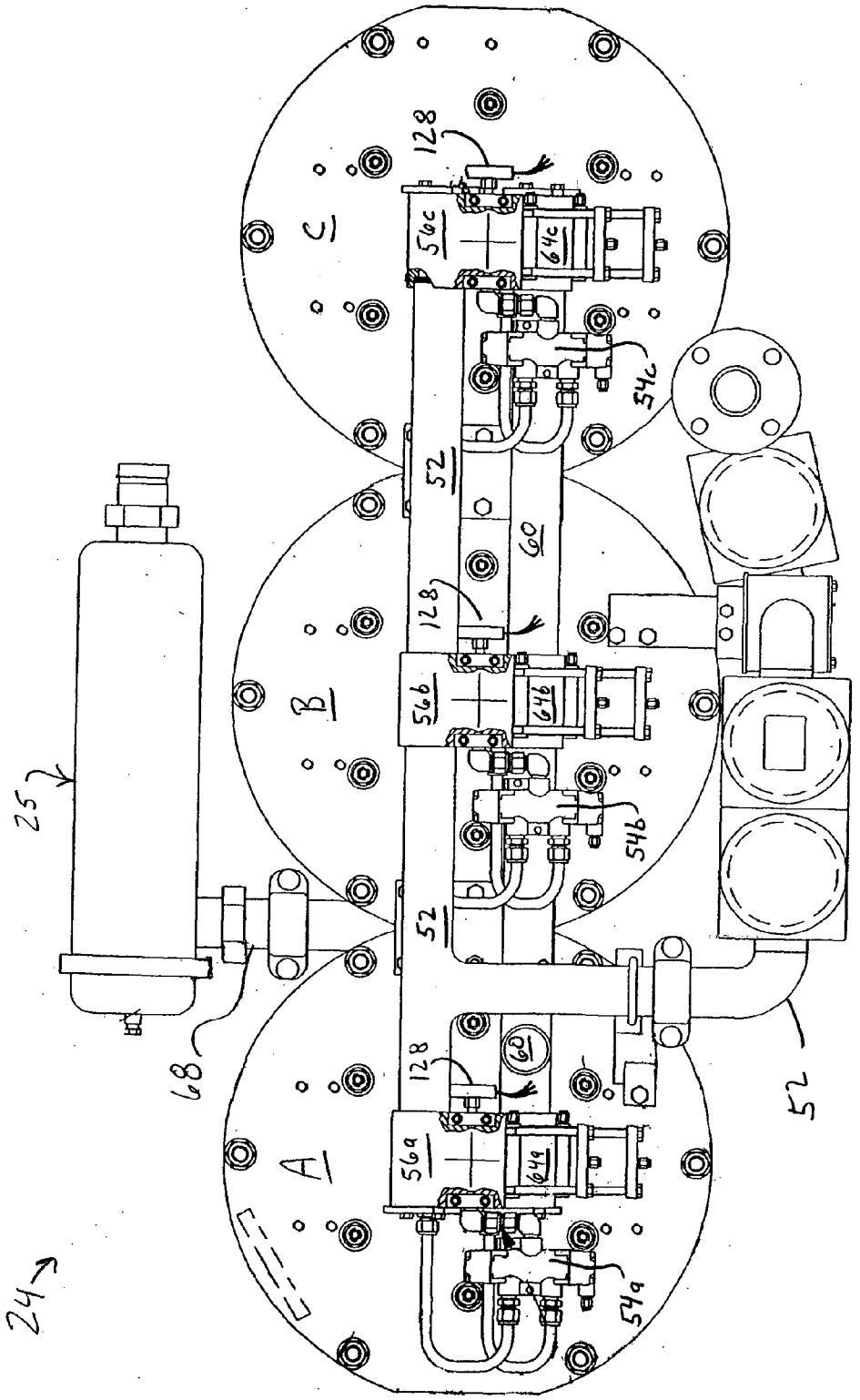
128
56c
64c
C
54c
52
60
128
56b
64b
B
54b
25
52
68
128
60
56a
64a
A
54a
52
24

FIG. 7

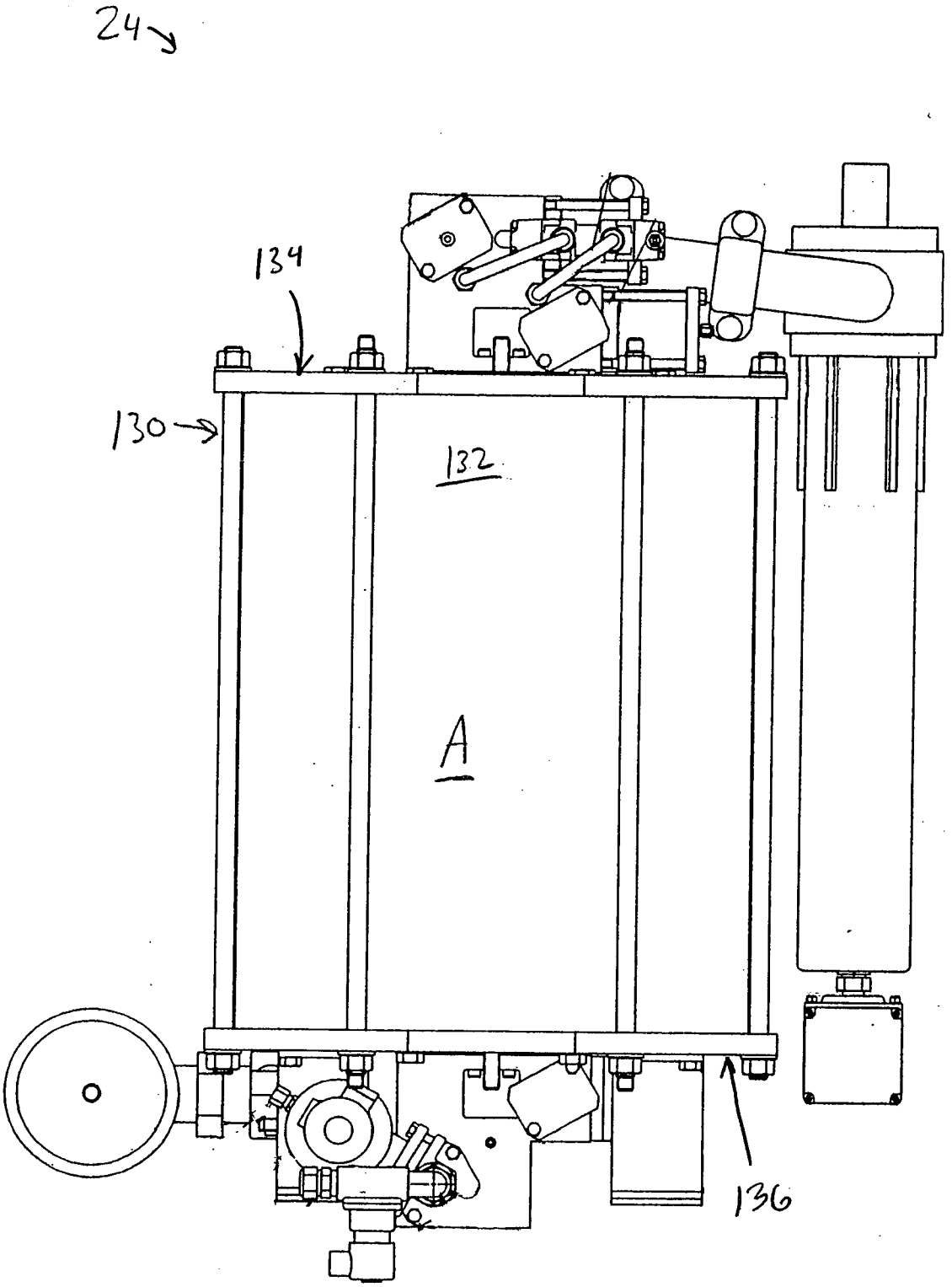

FIG. 8

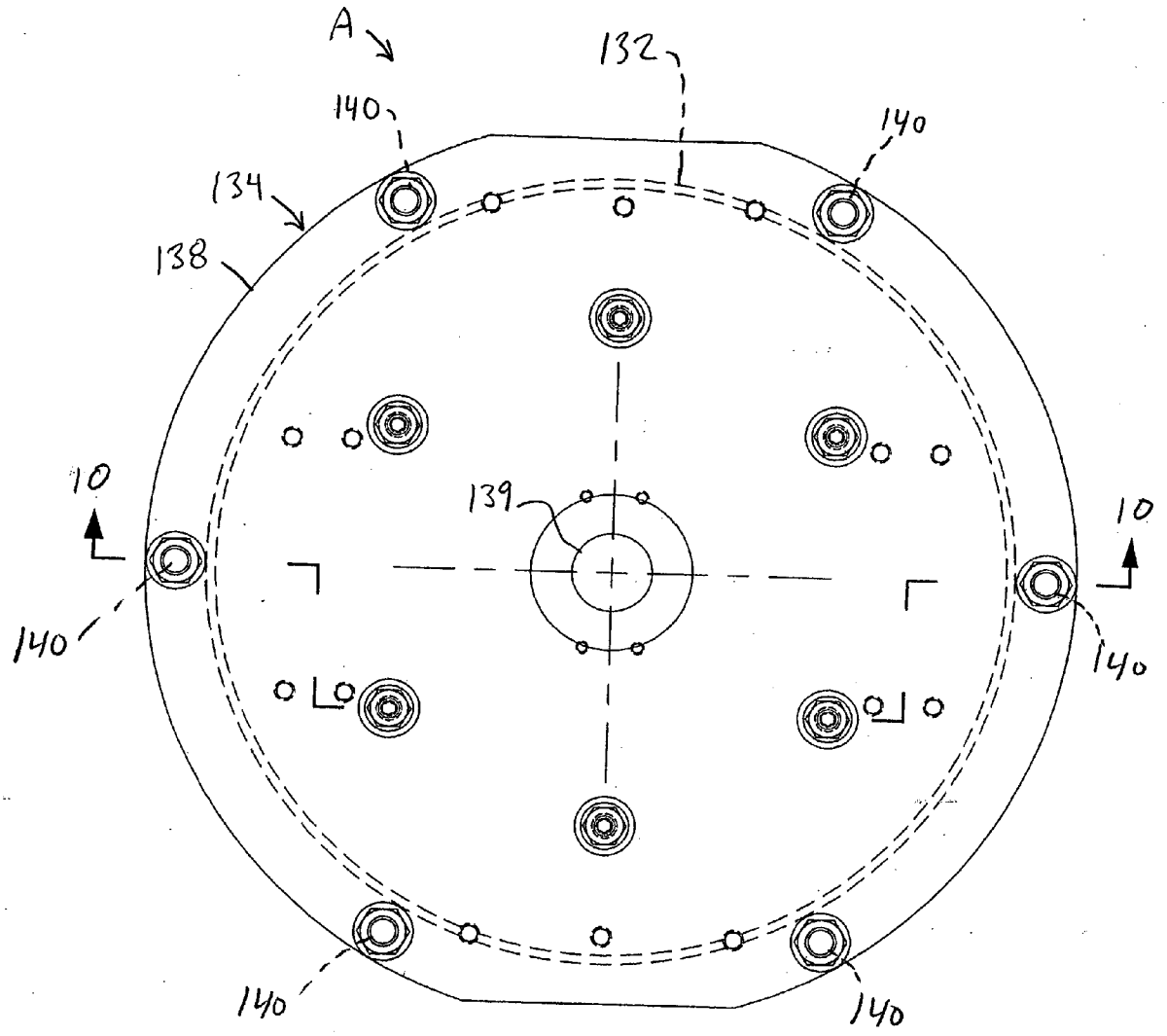

FIG. 9

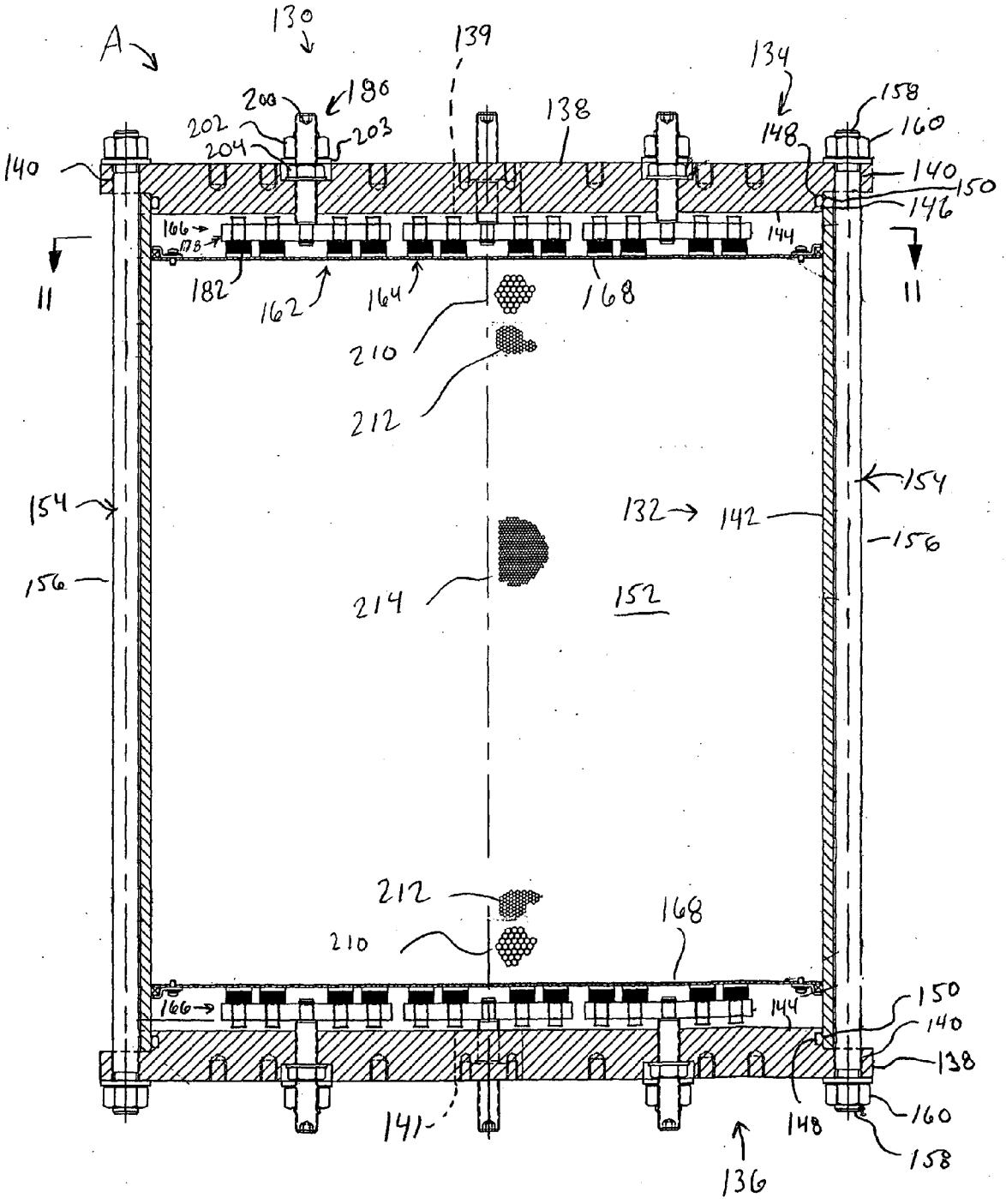
A
130
139
134
200
186
202
204
203
138
148
158
160
140
150
146
166
178
144
182
162
164
168
11
210
212
154
132
142
156
214
152
141
136

FIG. 10

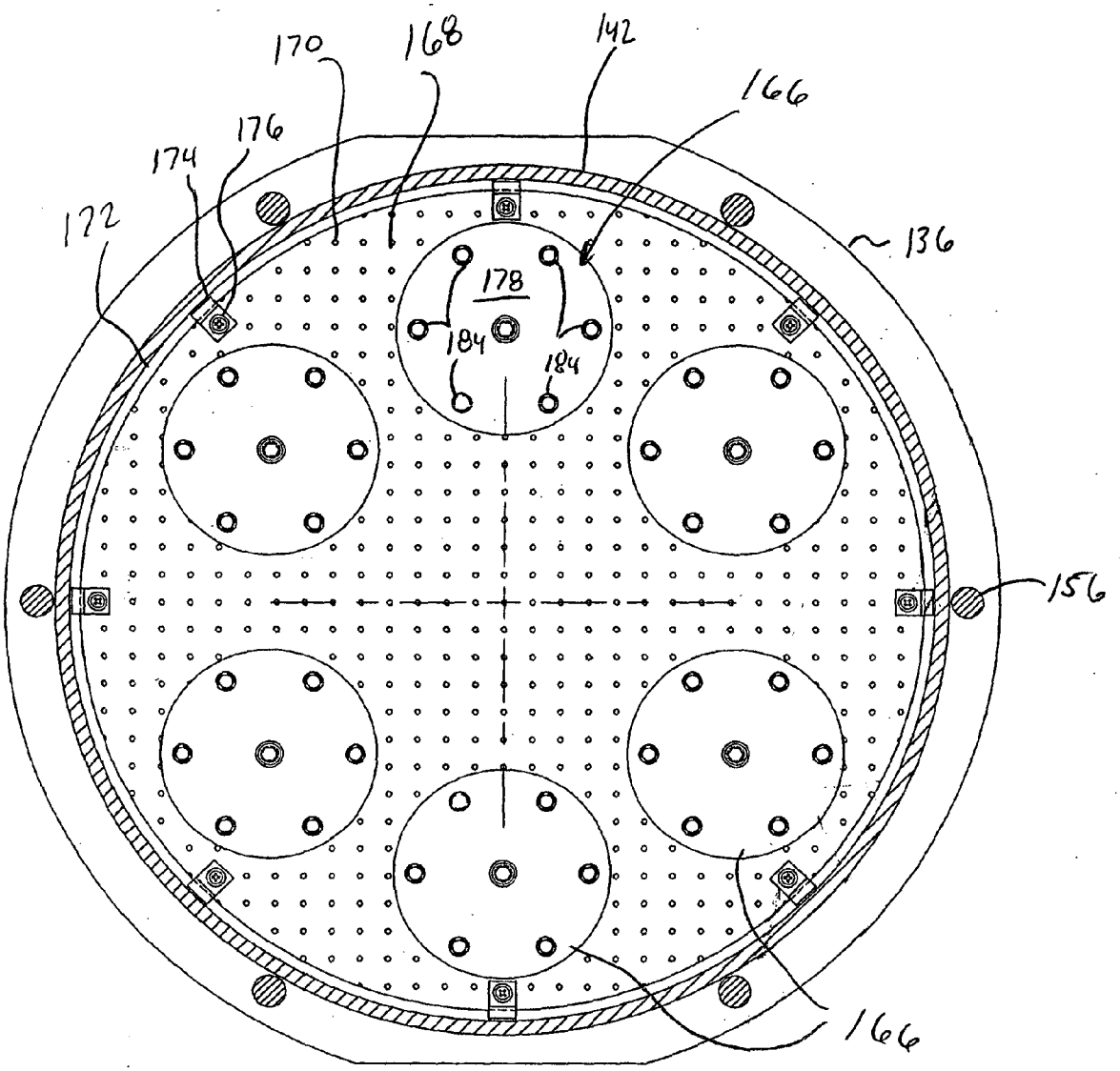

FIG. 11

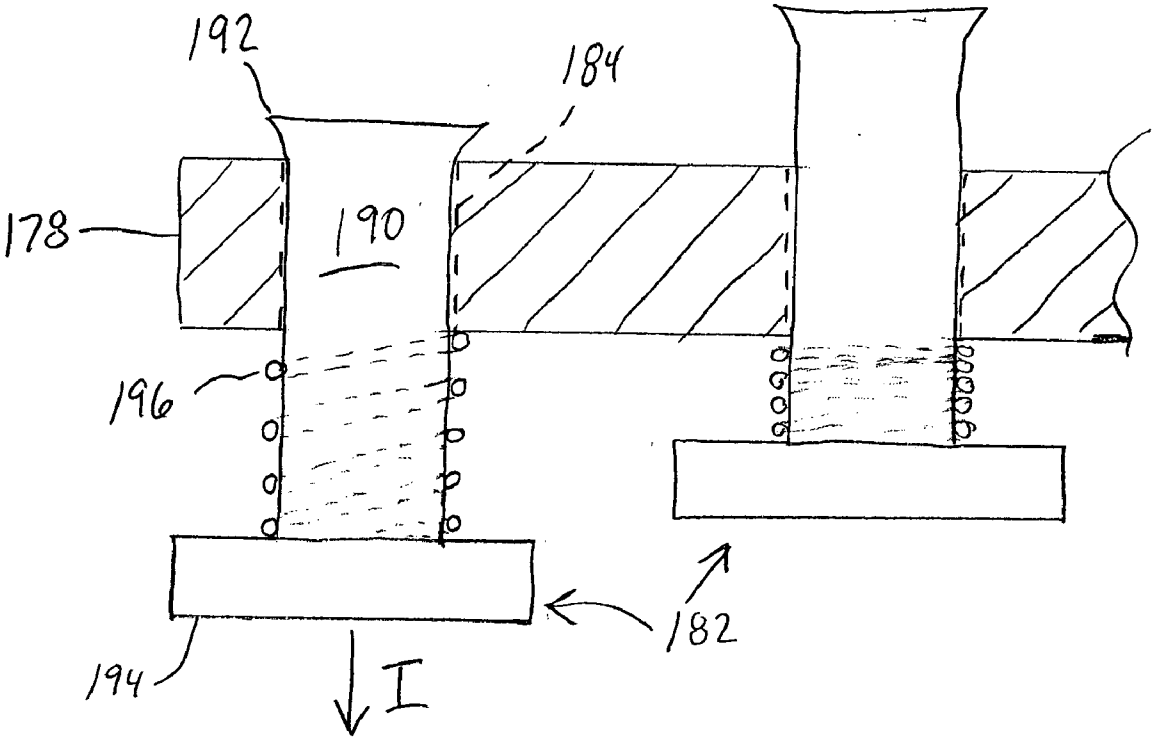

FIG. 11A

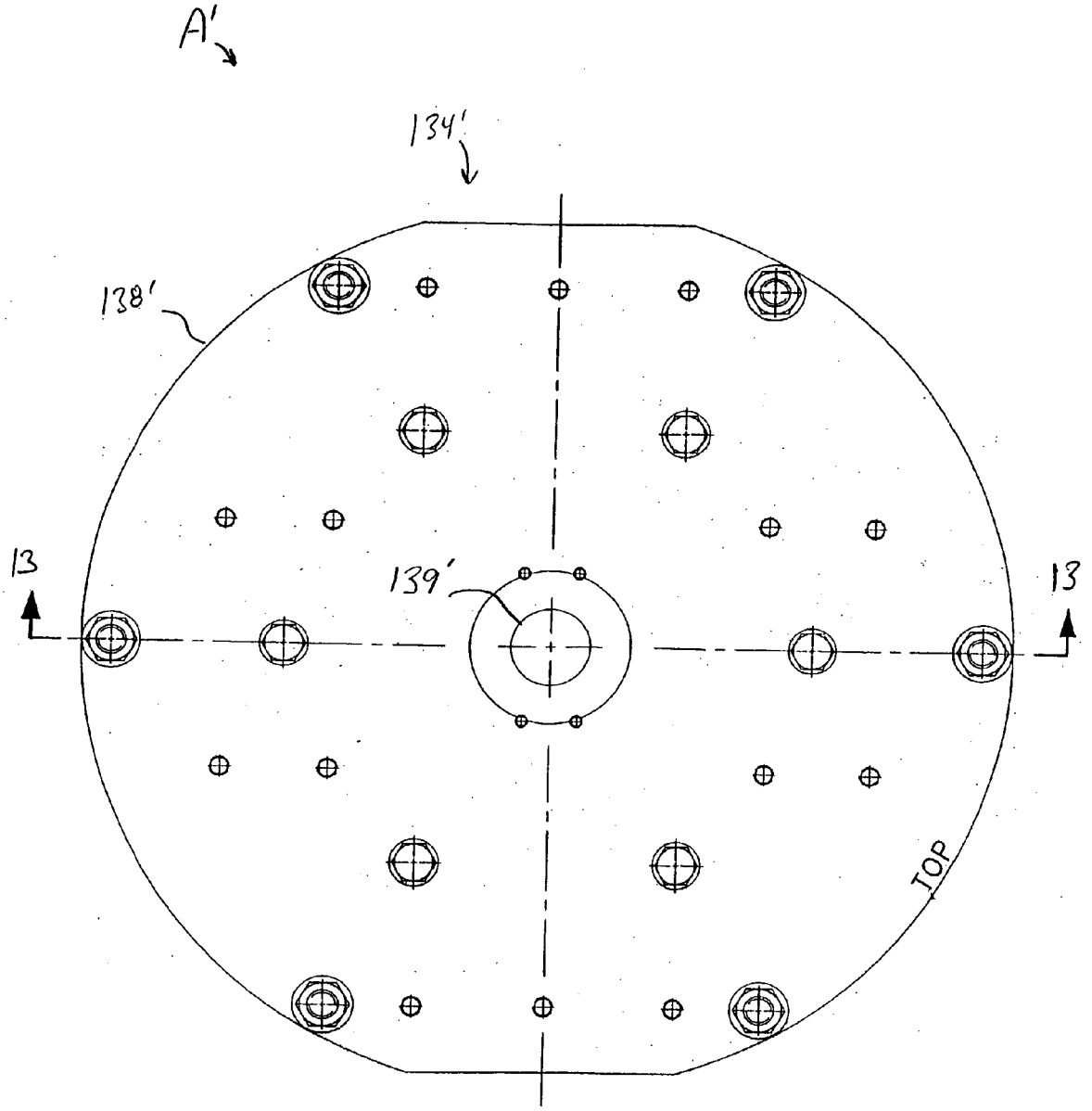

FIG. 12

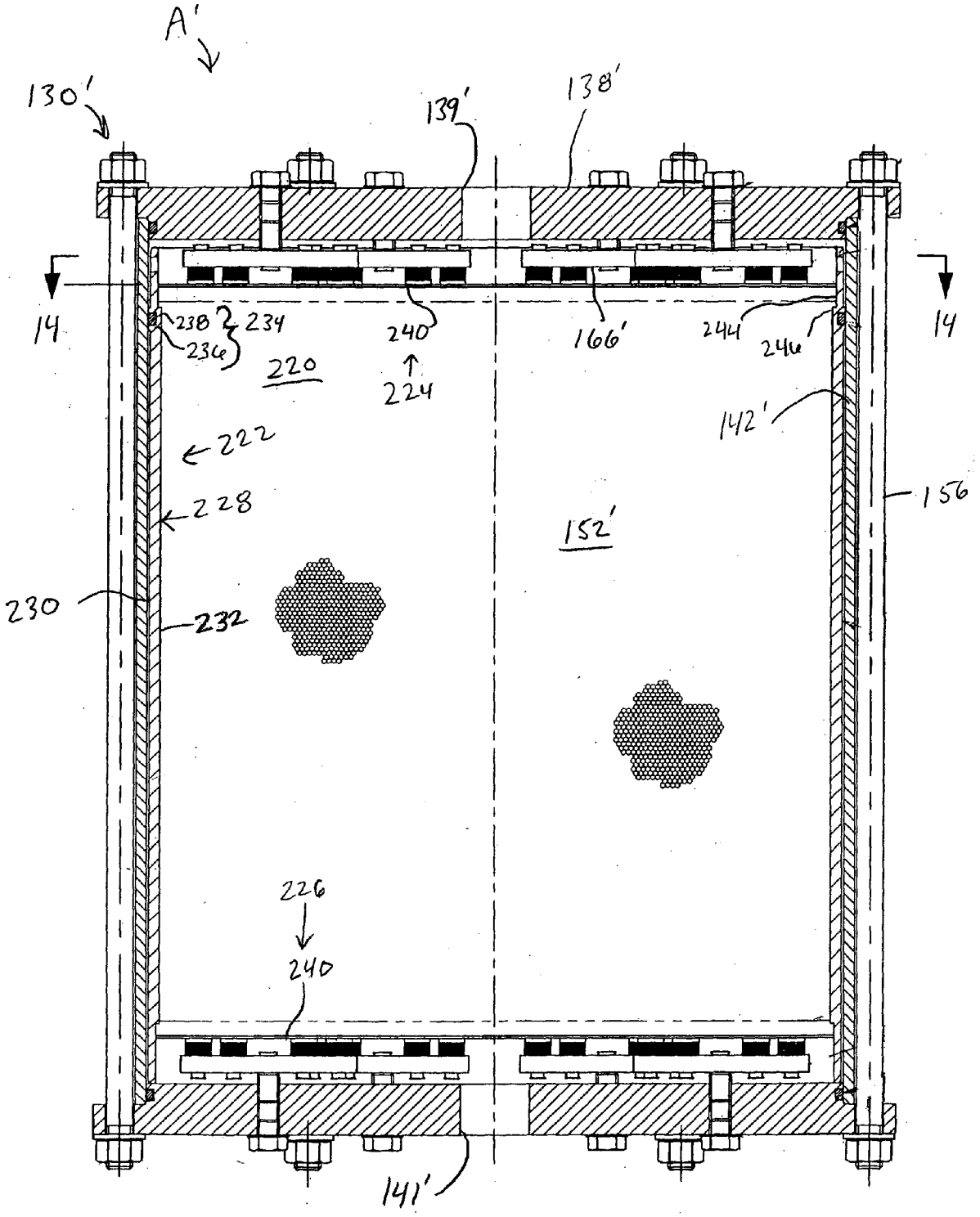
A'
130'
139'
138'
14
14
238
234
236
240
166'
244
246
220
224
142'
222
228
156
152'
230
232
226
240
141'

FIG. 13

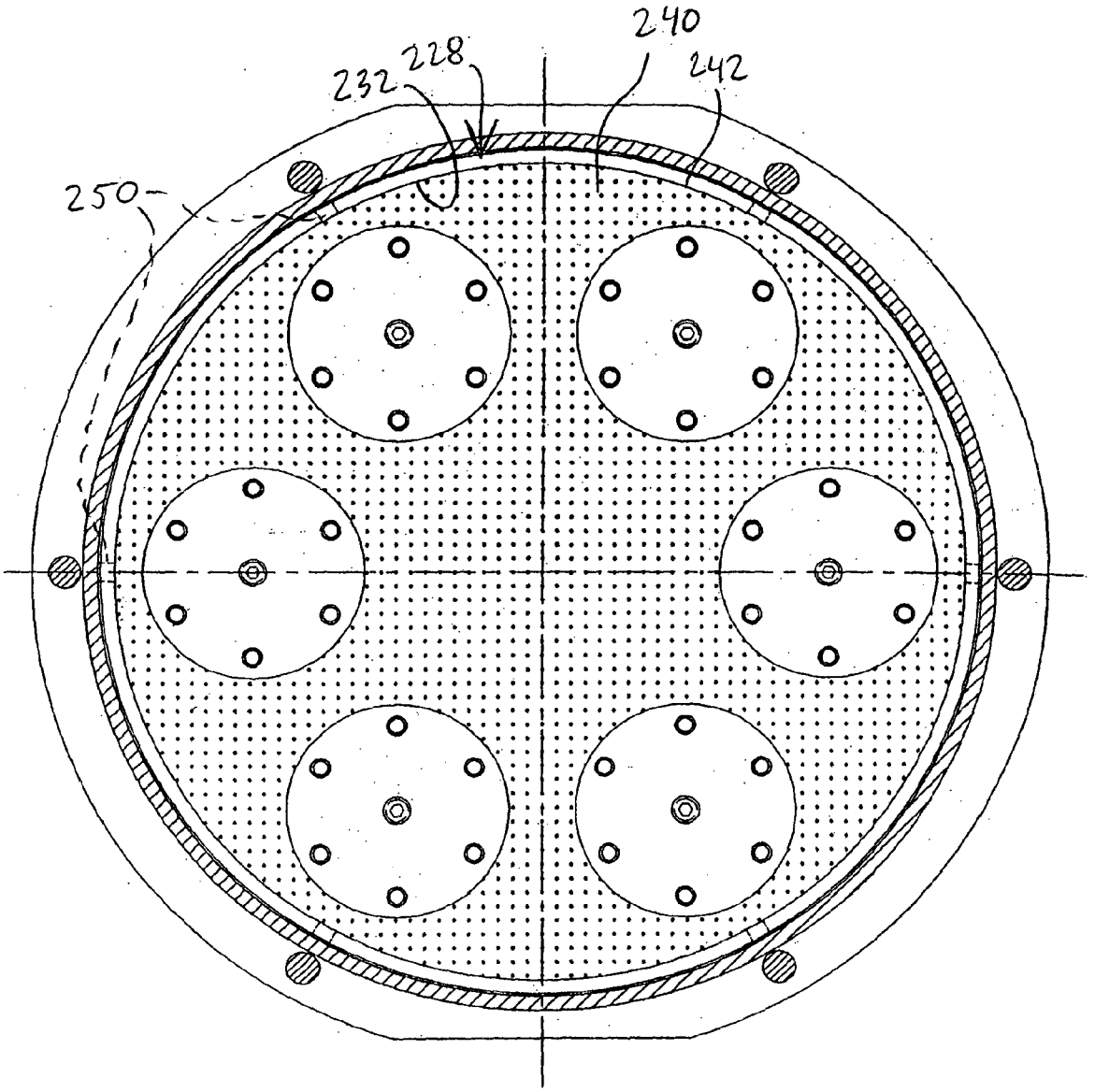

FIG. 14

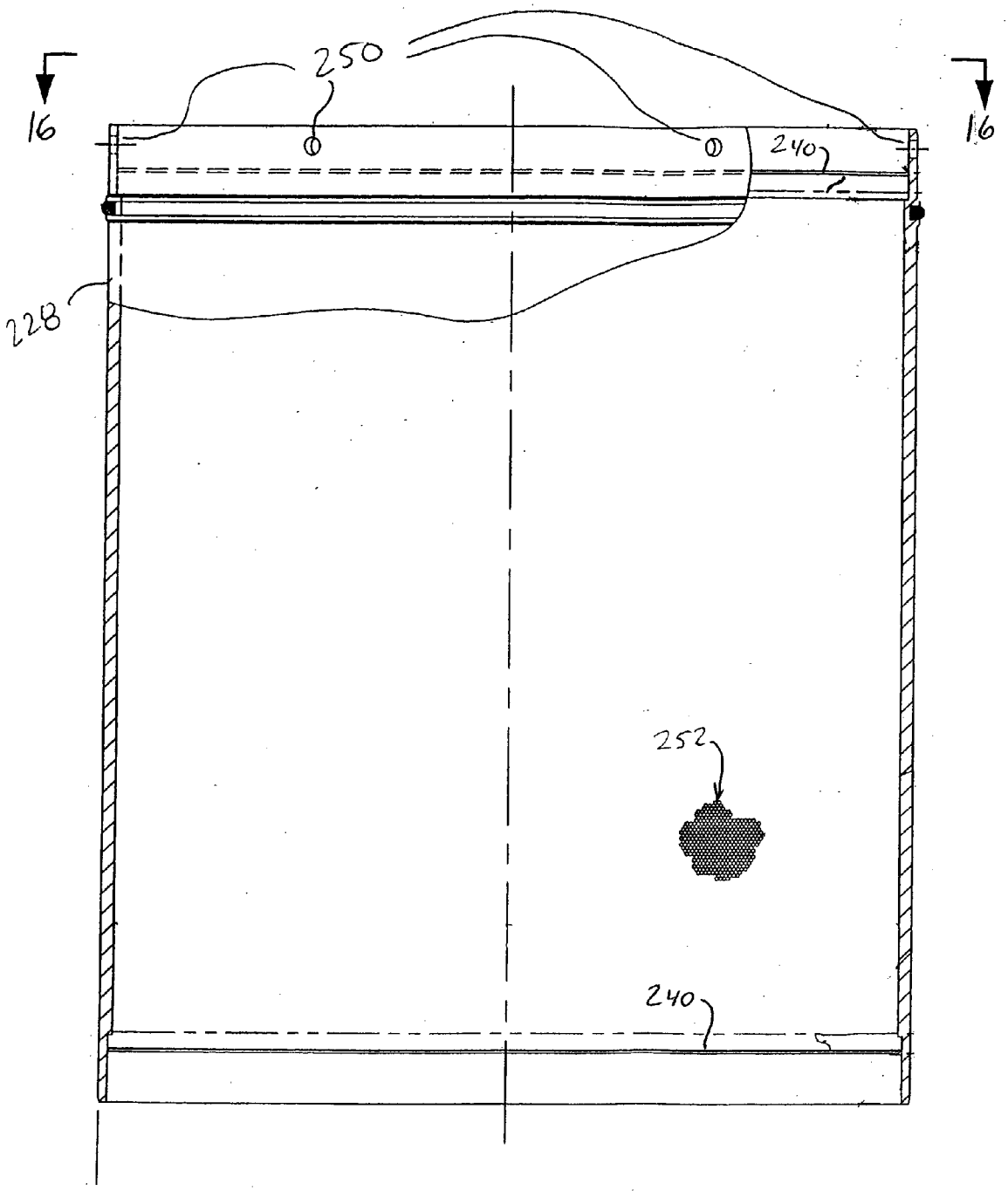

FIG. 15

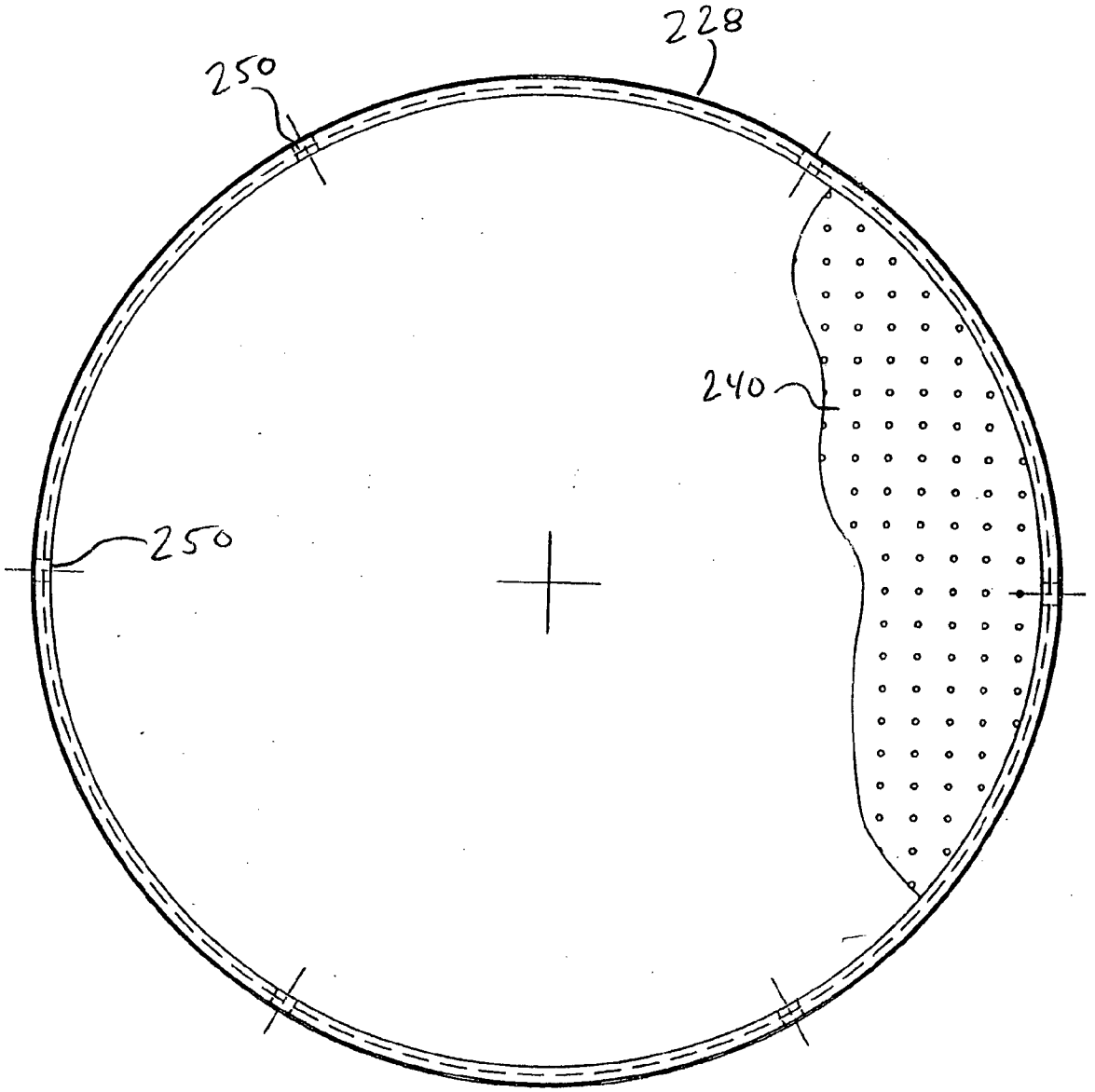

FIG. 16

REMOVABLE CARTRIDGE FOR SWING-TYPE ADSORPTION SYSTEM

BACKGROUND OF THE INVENTION

[0001] 1. Field of the Invention

[0002] The present application is directed to adsorber systems, and in particular, to an improved adsorber bed that can be used with a pressure-swing adsorption system.

[0003] 2. Description of the Related Art

[0004] The industrial and commercial uses of nitrogen, oxygen, and other purified fluids have created tremendous demands for such fluids in both liquid and gaseous phases. These demands are primarily met through large-scale stationary production facilities. Unfortunately, these facilities are located a substantial distance from the end user, necessitating the transportation of large quantities of liquid oxygen and nitrogen over substantial distances. For example, mobile medical facilities for emergency response bureaus require large mounts of liquid oxygen at remote locations. As liquid oxygen is highly explosive, and both liquid oxygen and liquid nitrogen must be kept under heavy pressure at extremely low temperatures, the transportation process is both dangerous and expensive.

[0005] Oxygen and nitrogen of high purity may be obtained through cryogenic distillation of ambient air. For effective distillation, the ambient air is filtered prior to the distillation process. In particular, H_2O, and CO_2 must be reduced to a concentration of less than 1 part per million (ppm) prior to the airstream entering the distillation columns. One such portable liquid oxygen/liquid nitrogen generating system is disclosed in the inventor's U.S. Pat. No. 4,957,523.

[0006] The process of adsorption is the assimilation of gas, vapor, or dissolved matter by the surface of a solid. Generally, adsorbers comprise an outer containment vessel with adsorbent material, or desiccant, distributed within, through which a fluid being filtered passes. There are many types of adsorbent material, including molecular sieves, activated alumna, silica gel, adsorbent clays, and activated carbon. Within each class of adsorbent there are hundreds of variations, both in chemical composition and granular form. The granular form includes such shapes as spherical beads, pellet extrudates, tablets, and irregular granules. While adsorbents used in industry are extremely rugged, they can be destroyed if either the internal or external stresses encountered in the service environment are excessive. Additionally, prolonged use eventually causes fatigue failures of the material itself or of immobilizing agents applied thereto.

[0007] Currently, there are two general classes of adsorber systems: temperature-swing adsorbers (TSAs) and pressure-swing adsorbers (PSAs). Both types of adsorbers have two stages of operation: one in which certain contaminates are adsorbed and thus removed from the fluid and the other in which the adsorber is purged of the contaminants which have adsorbed into the adsorbent material. TSA adsorbers have a filtering stage at around 40° F. and must be purged at relatively high temperatures (around 500° F.). TSA adsorbers typically require at least three hours to change from filtration temperature to regeneration temperature, to complete the regeneration and to change back to process temperature (one regeneration cycle). This regeneration cycle achieves a high level of contamination of the filtration bed during the filtering stage.

[0008] Pressure swing adsorbers, on the other hand, operate at a relatively constant temperature, but filtering at a high pressure and purging at a low pressure. Rapid PSAs have been developed with regeneration cycles of between 30 and 90 seconds. Such rapid pressure-swings, however, can send shock waves through adsorbent material, thereby accelerating fluidization, abrasion and/or fracture of the adsorbent material.

[0009] Immobilized adsorbent material provides enhanced resistance to fluidization or abrasion of adsorbent beads or grains. Such immobilization can be achieved by coating and bonding the beads or grains with an immobilizing agent. Known immobilization requires that the beads or grains be coated and bonded in-situ within an adsorber bed housing. Thus, if the adsorbent material becomes overly contaminated or the immobilizing agent has fractured, the entire adsorber bed must be replaced.

[0010] The inventor's U.S. Pat. No. 4,957,523 discloses the use of a dual-bed, immobilized, rapid PSA unit. The PSA includes two immobilized molecular sieve-type, bonded regenerable packed cylindrical beds. When one of the beds is on-line, processing the inlet airstream, the second bed is off-line being purged and regenerated. The regeneration of the off-line bed allows the invention to operate continuously without shutting down during periods of bed regeneration. Typically, one bed is online for 95 seconds, while the flow stream is filtered. During this 95 seconds the second bed is first depressurized, or dumped, then purged, and then pressurized in preparation for going on-line again. The stresses generated on the adsorbent material because of the rapid pressure-swings necessitate the use of immobilized beds.

[0011] For processes with two adsorber beds to be continuous, one adsorber bed must be depressurized from the on-stream pressure to the purge pressure, purged of the impurities, and repressurized to the on-stream pressure during the period of time that the other adsorber bed is purifying or separating the feed gas for the process. The "feed gas" is the unfiltered airstream entering the adsorption units. As a general rule of thumb, for the off-stream adsorber bed to be adequately purged, the purge gas must be of a volume at least equal to the volume of feed gas that passes through the adsorber bed, and preferably more than 1.5 times the feed gas on-stream volume. For example, if 100 cubic feet of feed gas were purified during the on-stream period, 100 cubic feet or more of purge gas must pass through the adsorber bed during the off-stream purging period. The gas used for purging the off-stream adsorber bed is usually a portion of the purified gas exiting the on-stream adsorber bed. Since the gas exiting the on-stream adsorber bed is used for the process, the net yield of purified gas is reduced by the amount required for purging the off-stream adsorber bed. With cryogenic air separation processes, sufficient waste gas must be available for purging the off-stream adsorber bed, or additional purge gas must be extracted from the purified air exiting the on-stream adsorber bed. This can make the cryogenic air separation process less efficient than it would have been had the purging gas requirement not been considered.

[0012] The time required to depressurize and repressurize the adsorber beds is the function of the on-stream and purge

pressures, the volume of the adsorber beds, and the rates of flow into and out of the adsorber beds. If pressurizing and depressurizing occurs too rapidly, the desiccant material may be damaged due to fluidizing or abrasion, with subsequent loss of desiccant and/or fracturing of the desiccant due to the rapid reduction of the pressure on the exterior surfaces of the desiccant before the pressure in the interior of the desiccant is reduced. The time required for depressurizing and repressurizing without damaging the desiccant is usually optimized based upon the physical size of the adsorber beds, and is thus fixed.

[**0013**] For a more portable system, for example if it is desired to shorten the on-stream time so the size of the adsorber beds can be reduced, the off-stream time must also be shortened to match. Since the depressurizing and repressurizing times are fixed, the time shortening period must come from the purging period. Since the purging time must be shortened a disproportionately greater amount than the on-stream time, the purging gas flow rate must be increased in order to maintain an adequate purge gas volume. This results in even less of the purified gas being available for the end process.

[**0014**] There has been a need for a more compact and efficient rapid PSA system utilizing nonimmobilized desiccant material within the adsorber beds.

SUMMARY OF THE INVENTION

[**0015**] One aspect of at least one of the inventions disclosed herein includes the realization that a substantial time saving can be achieved by constructing the adsorbent beds of the pressure-swing system with a removable cartridge containing the adsorbent materials. For example, certain high speed pressure-swing adsorption systems include adsorbent beds formed of a molecular sieve bed having immobilized beads. For example, but without limitation, such molecular sieves can include beads for filtering certain gasses from air. Such molecular sieve type beads can be coated and thus bonded to each other by a process that is owned by Pall Safety Atmospheres, Inc. This coating bonds together the beads at a point of contact there between but does not cover the remaining outer surface of the beads so as to avoid interfering with the adsorption process. However, over time and repeated pressure changes to which the adsorber beds are subjected, the bonds between the beads can be broken. As such, through continued use of the pressure-swing system and the associated pressure changes and fluid flow direction changes, the beads abraid against each other. As such, the beads begin to wear down and thus release small particles and dust into the pressure-swing adsorber system. Such dust can contaminate the system and clog other downstream filters. Thus, the beads are replaced from time to time.

[**0016**] In order to open an inner chamber of an adsorber bed assembly for removal and re-installation of adsorber beads, numerous pipes and high torque fittings must be disassembled. Additionally, after used beads have been removed from the adsorber assembly, new beads must be installed and properly encased within the housing. As such, the replacement of such beads can not typically be performed by a user of the equipment. Thus, a specially trained service person must personally perform the repair on site. Such repairs can take a week to perform.

[**0017**] However, as noted above, it has been realized that the complexity of and the required time for replacing the beads of an adsorption bed can be greatly reduced while providing a higher quality and longer lasting replacement product by providing the adsorber bed housing with a removable cartridge configured to encapsulate the beads under pressure.

[**0018**] Thus, accordingly, a pressure swing absorber unit can comprise a housing defining an interior chamber. A removable cartridge assembly can be removably disposed in the interior chamber. The removable cartridge assembly preferably comprises a wall assembly defining an absorber chamber, inlet and outlet screen members, and an absorber material disposed in the wall assembly. The inlet and outlet screen members are configured to retain the absorber material within the absorber chamber.

[**0019**] In accordance with another aspect of at least one of the inventions disclosed herein, a removable adsorbent bed cartridge for a swing type adsorber system includes a wall assembly defining an open inlet and an open outlet. A plurality of adsorbent members can be disposed in the wall assembly. A first perforated member can be disposed at the inlet end and a second perforated member can be disposed at the outlet end. The first and second perforated members being configured to retain the adsorbent members therein. The wall assembly is configured to be received within a housing of an adsorber bed assembly of the swing type adsorber system.

[**0020**] In accordance with yet another aspect of at least one of the inventions disclosed herein, a removable adsorbent bed cartridge for a swing type adsorber system comprises a wall assembly defining an open inlet and an open outlet. A plurality of adsorbent are members disposed in the wall assembly. A first perforated member is disposed at the inlet end and a second perforated member is disposed at the outlet end. The first and second perforated members are configured to retain the adsorbent members therein. The cartridge also includes means for forming a seal between an outer surface of the wall assembly and an inner surface of a housing of an adsorber bed assembly of the swing type adsorber system.

BRIEF DESCRIPTION OF THE DRAWINGS

[**0021**] **FIG. 1** is a diagram illustrating a cryogenic air separation system utilizing a three-bed, pressure-swing adsorber unit which can incorporate immobilized or nonimmobilized adsorbent material, which illustrates one exemplary environment of use for the present adsorber bed assembly;

[**0022**] **FIGS. 2***a*-**2***m* schematically illustrate the adsorber unit of **FIG. 1** in various stages of operation;

[**0023**] **FIG. 3** schematically illustrates the adsorber unit of **FIGS. 2***a*-**2***m* and a microprocessor control system;

[**0024**] **FIG. 4** is a table illustrating the conditions of a number of control valves for discrete steps in the cycle of operation of the adsorber unit;

[**0025**] **FIG. 5** is a table illustrating the conditions of each of the three adsorber beds at the times corresponding to **FIGS. 2***a*-**2***m;*

[0026] **FIG. 6** is a front elevational view of an exemplary three bed adsorber unit with the cryogenic air separation system illustrated in **FIG. 1**;

[0027] **FIG. 7** is a top plan view of the three-bed adsorber unit of **FIG. 6**;

[0028] **FIG. 8** is a side elevational view of the three-bed adsorber unit of **FIG. 6**;

[0029] **FIG. 9** is a top plan view of one of the adsorber beds illustrated in **FIG. 6**, with certain pipes removed;

[0030] **FIG. 10** is a cross sectional view of the adsorber bed assembly illustrated in **FIG. 9**, viewed along section line **10-10**;

[0031] **FIG. 11** is a sectional view of the adsorber bed illustrated in **FIG. 10**, viewed along section line **11-11** and illustrating a plurality of loading assemblies;

[0032] **FIG. 11A** is a sectional view of a portion of one of the loading assemblies illustrated in **FIG. 11**;

[0033] **FIG. 12** is a top plan view of an adsorber bed constructed in accordance with at least one of the inventions disclosed herein;

[0034] **FIG. 13** is a sectional view of the adsorber bed illustrated in **FIG. 12**, as viewed along section line **13-13**;

[0035] **FIG. 14** is a sectional view of the adsorber bed illustrated in **FIG. 13**, as viewed along section line **14-14**;

[0036] **FIG. 15** is a partial sectional and side elevational view of a removable adsorber bed cartridge removed from the housing of **FIGS. 12-14**;

[0037] **FIG. 16** is a top plan view of the cartridge illustrated in **FIG. 15**, as viewed along line **16-16**.

DETAILED DESCRIPTION OF THE PREFERRED EMBODIMENT

[0038] **FIGS. 1-11** illustrate one environment of use in which the present adsorber bed assembly can be used. In particular, **FIG. 1** illustrates a liquid oxygen/nitrogen generating system comprising an air compressor assembly **20**, a coalescer/HEPA filter **22**, a pressure-swing adsorber (PSA) **24**, a heat exchanger **26**, a turbo expander **28**, a nitrogen distillation column **30**, a condenser **32**, a subcooler **34**, and an oxygen distillation column **36**. However, the present adsorber bed assembly can be used with any type of system which benefits from periodic replacement of a sieve, filter, absorbent or adsorbent material.

[0039] In operation, prefiltered air is pressurized within the air compressor **20**, and the air is sent through the HEPA filter **22** to remove most of the oil and water aerosols left over from the compression process. The compressed air is then fed into the PSA unit **24** where chemical impurities, H_2O, and CO_2 vapor are removed to a concentration of less than 1 ppm. In addition, the PSA **24** removes common pollutants found in the atmosphere, such as carbon monoxide, methane, ethane, nitrous oxides, and oil vapors. The dried, purified inlet airstream passes through a filter **25** to remove any particulate matter produced by the PSA **24**.

[0040] After the PSA **24** and filtering, the airstream flows to the cryogenic distillation process, which, along with the storage tanks **38** and **40**, is generally encompassed by the dashed outline **27**. The airstream first enters the heat exchanger **26**, which cools the inlet air to cryogenic temperatures, partially liquefying the airstream. Approximately 75% of the inlet airstream is diverted from the heat exchanger **26** through the turbo expander **28** where it experiences a pressure loss from approximately 150 psig to 2 psig. The expansion of the air creates a cryogenic air flow which is employed to cool the remaining inlet airstream in the heat exchanger **26**. The remaining 25% of the inlet airstream then passes through an air expansion valve **37** which allows a reduction of the inlet airstream pressure to approximately 85 psig, further reducing the temperature of the airstream. The partially liquified cryogenic inlet airstream from the expansion valve **37** enters the dual distilling columns **30**, **36** which separate and liquefy the nitrogen and oxygen components within the airstream.

[0041] The resulting liquid is fed into two storage tanks **38**, **40** for the oxygen and nitrogen, respectively. Because the storage tanks **38**, **40** are desirably at a lower pressure than the corresponding distilling column **30**, **36**, the liquid oxygen and nitrogen must be subcooled in the subcooler **34** to remain in liquid phase. The subcooler **34** thereby cools the liquid oxygen and nitrogen below their condensing temperatures, which allows for transfer of the fluids to their respective storage tanks **38**, **40** without incurring vaporization of the liquids.

[0042] With specific reference to **FIGS. 2*a*-2*m***, a three-bed, nonimmobilized PSA system **50** is shown. The system **50** comprises three parallel adsorber beds, denoted A, B, and C. Each bed A, B, or C comprises an outer containment vessel and is closely packed with a desiccant which can be of the immobilized or nonimmobilized type. A feed gas line **52** communicates with each bed A, B, C through input legs of three-way valves **54*a***, **54*b***, **54*c***, and through selectable valves **56*a***, **56*b***, **56*c***. The three-way valves **54** and selectable valves **56** join at a common input line **58** into each bed. It will be noted that the valves and input and output lines to each of the adsorber beds A, B, C, can be identical, and thus the description herein may at times refer to individual valves or lines, and at other times may generically refer to any one of the three valves or lines using the element number alone, without alphabetic designation.

[0043] Each of the three-way valves **54** includes an output leg in communication with an exhaust line **60** common to all three adsorber beds. Each of the adsorber beds has an exhaust outlet **62** in communication with the exhaust line **60** through a valve **64**. On the other end of each of the adsorber beds, shown in the lower portion of **FIGS. 2*a*-2*m***, an adsorber bed output line **66** leads to a cryogenic distillation process input line **68**. Each one of the adsorber beds has a check valve **70** positioned in the output line **66**. A purge inlet line **72** for each of the adsorber beds also includes a check valve **74** between the adsorber bed and a waste gas line **76**.

[0044] As described below with reference to **FIGS. 3 and 4**, the valves **54**, **56**, **64**, **70** and **74** are configured for controlling the states of operation of the three-bed PSA unit **50**. The operational state of each valve is indicated by the valve being either shown in outline to designate open, or shown blackened to designate closed. The selectable valves **56** and **64** are preferably poppet-type valves wherein the poppet position is determined by an air-operated double-acting piston. Air pressure apply to sides of the piston is

controlled by a solenoid (**102** and **104**, respectively, shown in **FIG. 3**). Likewise, the operational state of the three-way valves **54** is indicated by the blackened portions of the upper left (output) or right (input) leg for each valve. The valves **56** and **64** are either open or closed allowing or preventing flow through each respective line. The three-way valves **54** are essentially toggle switches alternately permitting the flow of input feed gas into the respective adsorber bed, or the flow of purge gas from the adsorber bed to the exhaust line. The valves **70** and **74** are pressure-regulated check valves allowing flow in only one direction, and then only when the pressure differential on opposite sides of the valve reaches a threshold value. Preferably, the valves **70** and **74** have internal spring-actuated poppets for allowing flow in one direction but not in the opposite direction. In short, the "active" valves in the upper portion of the drawing are each selectively controlled by signals from an external source, while the "passive" valves in the lower portion of the drawings operate based on pressure differentials in the system.

[**0045**] To illustrate the operation of the passive valves, the pressure within the on-line third adsorber bed C at time T_0 in **FIG. 2***a* is greater than that in the process conduit **68**, and thus gas flows downward through the valve **70***c*. Valve **70***c* is "open." On the other hand, the check valve **74***c* prevents gas from flowing downward into waste gas conduit **76** at all times, and the pressure differential is such that gas will not flow upward into the pressurized bed C. Valve **74***c* is "closed." At the next time frame T_1, shown in **FIG. 2***b*, however, the third adsorber bed C is allowed to depressurize and thus the pressure differential between the bed C and the process conduit **68** reduces such that the check valve **70***c* closes, preventing gas from the bed from entering the process conduit **68**. At the same time, the pressure within the third adsorber bed C remains sufficient to prevent purge gas from the waste conduit **76** from entering the adsorber bed. As the pressure decreases, however, the check valve **74***c* will eventually open to allow purge gas through the line **72***c* to purge the third adsorber bed C, as seen in the next time frame T_2.

[**0046**] The liquid oxygen/nitrogen generating system further includes a bypass system of conduits **79** for the three-bed, rapid pressure-swing adsorber **50** shown in **FIG. 1**, and in the lower portions of **FIGS. 2***a*-**2***m* and **FIG. 3**. The process conduit **68** and waste gas conduit **76** are connected in a section of conduit **75** between the junctions with the three adsorber beds A, B, C. A pressure-reducing valve **78** and a solenoid-operated valve **80** are positioned in series in the conduit section **75**. A check valve **82** is positioned in the waste gas conduit **76** between the adsorber beds A, B, C and the cryogenic distillation process to prevent backflow to the process.

[**0047**] The purge flow to each of the adsorber beds A, B, C may be directly from the waste gas stream produced in the cryogenic distillation process through valve **82** and conduit **76**, or may be siphoned off of the filtered or purified process flow from the beds if valve **78** is open. That is, the pressure downstream from the particular bed which is on-line, and thus the pressure in conduit **68** is greater than the waste gas flow pressure in conduit **76**, and thus purified process flow from the beds will travel through the open valve **78** into the conduit **76**. The purified process flow directly siphoned from the adsorbers is thus available for purging the beds. This siphoned flow from the purified gas stream reduces the total airstream allowed to flow to the cryogenic distillation process, and thus reduces the efficiency of the system. Prior to the waste gas stream reaching a desired level of purification, however, the purge flow must derive from a portion of the process flow. After a certain period of time, the waste stream is of sufficient volume to provide for all the purge flow, and the valve **78** is closed to allow the entire purified gas stream to flow to the cryogenic distillation process, thus maximizing the efficiency of the system.

[**0048**] The operation of each of the adsorber beds during a number of discrete stages of the overall system operation is described with reference to **FIGS. 2***a*-**2***m*, and to the corresponding table in **FIG. 5**. For illustration purposes, the adsorption cycle is broken up into discrete periods T_0-T_{12}, some of which have a very short duration (indicated to be zero seconds in the chart) and others of which have a much longer duration (such as T_6, which has a duration of 50 seconds). The time periods having a duration of less than one second (T_0, T_4, T_8, and T_{12}), are illustrated to ensure a complete understanding of the system, and are represented as having durations of zero seconds as no significant volume of flow takes place during the time period. The durations of these time periods are given in **FIG. 5**. In other systems and, if desired, in the preferred systems, these time periods can vary.

[**0049**] Each of the adsorber beds A, B, C may be in one of four operational states, indicated with the symbols in the legend of each of **FIGS. 2***a*-**2***m*. More specifically, the adsorber beds may be "on-line" adsorbing contaminants, "purging" to clean the contaminants, "depressurizing" prior to purging, or repressurizing prior to being on-line.

[**0050**] With reference now to **FIG. 2***a*, a first stage of operation is shown, which is chosen arbitrarily from the cyclical repetition of such stages of operation. In the first stage of operation, indicated as time T_0, feed gas from the filter **22** at high pressure of 30 to 200 psig, and more preferably between 120 and 150 psig, is passed through conduit **52** through inlet selectable valve **56***a* into adsorber bed A. Feed gas is also passing through inlet leg of three-way valve **54***a* into common input line **58***a* and adsorber bed A. Feed gas is purified (or separated) through adsorber bed A and exits via valve **70***a* and into conduit **68** for delivery to the cryogenic distillation process. The check valve **74***a* presents flow from the adsorber bed A to the waste gas conduit **76**, and prevents flow in the opposite direction due to the higher pressure in the adsorber bed A in comparison with the waste gas conduit **76**.

[**0051**] At the same time that adsorber bed A is on-line, the second adsorber bed B is being purged. In this respect, valve **64***b* is held open and valve **74***b* is open due to the pressure differential between the waste gas conduit **76** and second adsorber bed B, thus allowing purge flow from the waste gas conduit **76** through bed B to the exhaust conduit **60**. Valves **56***b*, and **70***b* are closed during this time, as is the input leg of valve **54***b*. The third adsorber bed C is also on-line at this time, with the valves **56***c* and **70***c* open, as well as the input leg of valve **54***c*.

[**0052**] To transition between the operational states of **FIGS. 2***a* and **2***b*, the feed gas selectable inlet valve **56***c* is closed, and outlet valve **70***c* is caused to close, at third adsorber bed C shut-off time at the start of time period T_1

(**FIG. 2***b*). This momentarily locks feed gas at high pressure in adsorber bed C. The input leg of valve **54***c* is closed immediately after selectable valve **56***c* and the output leg of valve **54***c* opens to begin a controlled, slow depressurization of adsorber bed C by passing the diminishing high-pressure gas into exhaust conduit **60** and out to the atmosphere. The output leg of valve **54***c* can be configured to allow the adsorber bed C to depressurize at a flow rate such that any nonimmobilized desiccant does not fluidize.

[**0053**] As is well known in the adsorber industry, the superficial velocity of the pressure front in a PSA bed must be below a predetermined value to prevent the desiccant material within the bed C from fluidizing. Typically, the velocity is less than 30 feet per minute (fpm) to avoid such fluidizing, and is usually between 20-30 fpm. Thus, the depressurizing flow rate through the output leg of valve **54***c* is designed for the particular system architecture to induce a superficial pressure front velocity in bed C of less than 30 fpm. Where immobilized desiccant is used, the velocity can be higher.

[**0054**] During the period T_1, purge gas at essentially atmospheric pressure (0.5 to 5 psig) is fed into waste gas conduit **76** through pressure-reducing valve **78** (if valve **80** is open) from the adsorption process, and/or through valve **82** from the waste stream of the cryogenic distillation process. This purge gas flows through purge gas inlet valve **74***b*, through second adsorber bed B (in a direction opposite to that which the feed gas flows when the bed is on-line), through valves **64***b* and **54***b*, and into exhaust conduit **60** leading to the atmosphere. The depressurizing gas flow is indicated by the arrows **77**.

[**0055**] At time T_2, shown in **FIG. 2***c*, valve **64***c* is opened and **74***c* opens due to the pressure differential between the waste gas conduit **76** and third adsorber bed C, thus allowing purge gas from waste gas conduit **76** to pass into adsorber bed C. Valves **70***b* and **70***c* are closed due to the pressure in outlet process conduit **68** being higher than the pressure in either of the second or third adsorber beds B or C. The valve **64***c* is opened at a predetermined instant when the pressure in the third adsorber bed C has depressurized to a level sufficient for purging. One of skill in the art will recognize that the time required for slow depressurizing varies based on the geometry of the system and flow parameters, and also that the pressure within the adsorber bed may be sensed and fed back into a control system for actuating the valve **64***c*. Purge gas then flows from the conduit **76** through the valve **74***c* and through the third adsorber bed C. During time T_2, the first adsorber bed A remains on-stream purifying or separating the feed gas, and both the second and third adsorber beds B and C are off-stream having the impurities they adsorbed during their on-stream period removed, or desorbed, with purge gas.

[**0056**] At an appropriate time prior to impurities breaking through the outlet side of the first adsorber bed A, the purge outlet valve **64***b* is closed (at the beginning of time period T_3, **FIG. 2***d*). The term "impurity breakthrough" refers to the condition when the impurity level within the particular on-line adsorber bed is unacceptable, which is typically when the adsorbent material within becomes saturated with impurities to a point at which some may "break through" to the output side. of the bed. It should be noted that the appropriate time prior to impurity breakthrough of the first adsorber bed A is determined empirically, or may be predicted with reasonable certainty from the bed size and flow parameters.

[**0057**] To maximize the efficiency of such a system, the on-line bed can adsorb contaminants up to the point at which it becomes saturated with impurities. Simultaneously, the parallel bed which will next go on-line can be purged for a maximum time period prior to repressurization. Thus, while the first bed is on-line, the purge period of the next bed will be the total on-line period of the first bed, minus the time to slowly repressurize the next bed. In one specific example set forth in more detail below, the on-line bed adsorbs for 90 seconds, and during that period the next bed purges for the first 70 seconds, and repressurizes for the last 20 seconds. This synchronizes the completion of repressurizing of the next bed with the instant of impurity saturation of the first bed, thus maximizing both the purge and on-line times of each, respectively.

[**0058**] After valve **64***b* is closed, the input leg of valve **54***b* is opened which allows feed gas from conduit **52** into the second adsorber bed B, as indicated by flow arrows **84**. The input leg of valve **54***b* is configured to allow a controlled, slow repressurization of adsorber bed B. The input leg of valve **54***b* allows the adsorber bed B to repressurize at a flow rate which, for the particular system architecture, induces a superficial pressure front velocity of less than 30 fpm in bed B to prevent the desiccant material within the bed from fluidizing. However, as noted above, where an immobilized desiccant is used, higher velocities can be used. During this time, valve **74***b* is closed due to the pressure in adsorber bed B being higher than the pressure in waste gas conduit **76**.

[**0059**] At time T_4 (**FIG. 2***e*), when the pressure in the second adsorber bed B is essentially the same as the pressure in the feed gas conduit **52**, the selectable valve **56***b* is opened, putting adsorber B on-line and allowing feed air to be purified or separated by passing through the adsorber bed. In this respect, the purified or separated air downstream of the second adsorber bed B passes through valve **70***b* and into process conduit **68** for delivery to the subsequent cryogenic distillation process. At this time the first adsorber bed A remains on-line so that the process has an uninterrupted supply and third adsorber bed C continues to be purged.

[**0060**] Shortly after selectable valve **56***b* is opened to put the second adsorber B on-line, the selectable valve **56***a* closes at first bed A shut-off time at the start of time period T_5 (**FIG. 2***f*). The input leg of valve **54***a* is closed immediately after valve **56***a* and the now open output leg begins a controlled, slow depressurization of the first adsorber bed A by passing the diminishing high-pressure gas into the exhaust conduit **60** and out to the atmosphere (shown by flow arrow **86**). During this time, purge gas, at essentially atmospheric pressure (0.5 to 5 psig), is still being fed into waste gas conduit **76** through pressure-reducing valve **78** (if valve **80** is open) and/or valve **82** from the waste gas stream of the cryogenic distillation process. This purge gas flows through valve **74***c* in a direction opposite to the normal flow of feed gas, through valve **64***c* and output leg of valve **54***c*, and into exhaust conduit **60** leading to the atmosphere. During this time, valves **70***a* and **70***c* are closed due to the pressure differential between the process conduit **68** and the pressure in the first and third adsorber beds A and C, respectively.

[0061] As shown in **FIG. 2***g*, at the beginning of time period T_6, when the adsorber bed A has depressurized to essentially the pressure in the waste gas conduit **76**, valve **64***a* is opened allowing purge gas to pass through valve **74***a* and through the first adsorber bed A. Purge gas passes from the adsorber bed A through the valve **64***a* and output leg of valve **54***a*, into the exhaust conduit **60**. During this time the second adsorber B is on-line, purifying or separating the feed gas, and the first and third adsorbers A and C are off-line, having the impurities they adsorbed during their on-line period removed (desorbed) with purge gas.

[0062] At an appropriate time prior to impurities breaking through the outlet side of the second adsorber bed B, valve **64***c* is closed which corresponds to the beginning of time period T_7 (**FIG. 2***h*). The input leg of valve **54***c* is immediately opened and allows feed gas (indicated at **88**) from conduit **52** to flow through the valve **54***c* into the third adsorber bed C. The input leg of valve **54***c* is configured to allow a controlled, slow repressurization of adsorber bed C. Valve **74***c* is held closed by the pressure in the third adsorber bed C being higher than the pressure in the conduit **76**.

[0063] At a predetermined time corresponding to when the pressure in the third adsorber bed C reaches essentially the same pressure as that in feed gas conduit **52**, the selectable valve **56***c* is opened (time T_8, seen in **FIG. 2***i*). This puts the third adsorber C on-line and allows feed air to be purified or separated by passing through valve **70***c* and into process conduit **68** for delivery to the cryogenic distillation process. The second adsorber bed B remains on-stream so that the process has an uninterrupted supply of purified feed gas.

[0064] As indicated in **FIG. 2***j*, at the start of time period T_9, immediately after selectable valve **56***c* is opened and puts adsorber C on-line, the selectable valve **56***b* is closed at bed B shut-off time. The input leg of valve **54***b* is closed immediately after valve **56***b* and begins a controlled, slow depressurization of the second adsorber bed B by allowing the high-pressure gas from the adsorber bed to exhaust slowly into conduit **60** and out into the atmosphere (as indicated by flow arrows **90**). During this time, purge gas at essentially atmospheric pressure is still being fed into conduit **76** through pressure-reducing valve **78** (if valve **80** is open) and/or valve **82** from the waste stream of the cryogenic distillation process. This purge gas flows through valve **74***a*, through the first adsorber bed A in a direction opposite to that of the feed gas, through valve **64***a* and output leg of valve **54***a*, and into the exhaust conduit **60** leading to the atmosphere. Valves **70***a* and **70***b* are held closed by the pressure differential between the process gas conduit **68** and the pressure in the first and second adsorber beds A and B, respectively. That is, the pressure in the process conduit **68** is higher than that in the first or second adsorber beds A or B.

[0065] At the beginning of time period T_{10}, shown in **FIG. 2***k*, valve **64***b* is opened. At this time the pressure in adsorber bed B is essentially the same as that in the waste gas conduit **76**. This allows purge gas from conduit **76** to pass through valve **74***b*, through the second adsorber bed B, through both valve **64***b* and output leg of valve **54***b*, into the conduit **60** and out to the atmosphere. During this time period, the third adsorber C remains on-line, purifying or separating feed gas, and the first and second adsorbers A and B are off-line, having the impurities they adsorbed during their on-stream period removed with purge gas.

[0066] At a time prior to impurities breaking through the outlet side of the third adsorber bed C, valve **64***a* is closed at the beginning of time period T_{11}, as shown in **FIG. 21**. Immediately afterward, the input leg of valve **54***a* is opened to allow feed gas from conduit **52** to pass therethrough into the first adsorber bed A, as indicated by flow arrows **92**, to begin a controlled, slow repressurization of the first adsorber bed. During this time, valve **74***a* is closed due to the higher pressure in the first adsorber bed A in comparison to the pressure in the waste gas conduit **82**.

[0067] At a predetermined time T_{12} corresponding to when the pressure in the first adsorber bed A is essentially the same as the pressure in the feed gas conduit **52**, selectable valve **56***a* is opened, as seen in **FIG. 2***m*. This puts the first adsorber A on-line and allows feed gas to be purified or separated by passing therethrough past valve **70***a* and into the process conduit **68** for delivery to the cryogenic distillation process. The third adsorber C remains on-line so that the process has an uninterrupted supply of purified gas.

[0068] It is to be noted that the operational state illustrated in **FIG. 2***m* at time T_{12} is the same as the operational state of **FIG. 2***a* at time T_0. Thus, the entire cycle is shown through **FIGS. 2***a*-**2***m*, which cycle is repeated for a continuous process.

[0069] With reference to **FIG. 3**, a microprocessor **100** is illustrated connected to a plurality of control elements for selecting the operational states of the "active" valves **54**, **56** and **64**. More particularly, the microprocessor **100** controls three solenoid valves **102***a*, **102***b*, **102***c*, which, respectively, control the open or closed state of each of the purge exhaust valves **64***a*, **64***b*, **64***c*, of the three adsorber beds A, B, C. Likewise, the operational state of the three main feed gas input valves **56***a*, **56***b*, **56***c*, is selectable by the action of three solenoids **104***a*, **104***b*, **104***c*, connected to the microprocessor **100**. Finally, the microprocessor **100** is connected to three solenoid-actuated pilot valves **106***a*, **106***b*, and **106***c* for controlling one of the three-way valves **54***a*, **54***b*, **54***c*. That is, the pilot valves **106** control a piston within the respective three-way valves **54** and function as toggle switches to allow flow either out of the output leg of the three-way valve, or into the input leg, depending on the position of the piston. As indicated above, these operational states are shown in **FIGS. 2***a*-*m* for each of the three-way valves **54**. By controlling the valves **54**, **56** and **64**, the adsorption process is optimized to enable the volumetric flow of feed gas to be increased while the volumetric flow of waste gas siphoned off in the adsorption process to purge each of the adsorber beds is decreased.

[0070] A typical sequence of operation of each of the valves is indicated in table form in **FIG. 4**. Along the top row, each of the valves is indicated, as well as its function and designated microprocessor output number. Therefore, there are nine outputs from the microprocessor leading to the nine valves. The function of each of the valves is indicated by the letter designation of the respective adsorber bed (A-C), and by the initial of the particular flow through that valve. Feed gas inlet valves **56** are thus designated with a capital I. Purge gas exhaust valves **64** are designed with a capital E. Each three-way valves **54** has two legs: an input leg for repressurizing (R) adsorber bed, and an output leg for dumping or depressurizing (D) the adsorber bed. The table of **FIG. 4** shows a number of discrete steps in the micro-

processor control algorithm for which actions are taken. At each step, the operation condition of each valve (or leg) is indicated with an O (open) or an X (closed). The specific action taken at each step is shown in bold for clarity.

[0071] Step **0** corresponds to an initial condition, or to the condition in step **18** during the adsorption process. Therefore, if the process has cycled at least once, the action taken in step **0** (or **18**) is to change the condition of selectable valve **56***a* from closed to open. This opens the input of feed gas into the first adsorber bed A. In step **2**, the selectable valve **56***c* which controls the feed gas input to the third adsorber bed C is closed from an open state. The elapsed time between step **0** and step **1** is 0.6 seconds. In step **2**, after another 0.6 seconds, the three-way valve **54***c* is switched from a condition allowing feed gas into the third adsorber bed C, to a condition in which purge gas is allowed out of the third adsorber bed. This is indicated by the closed condition of C-R, and the open condition of C-D. In step **3**, which is 20 seconds after the initial time 0, the exhaust valve **64***c* of the third adsorber bed C is opened. This allows the third adsorber bed to begin purging. After another 50 seconds at step **4**, the exhaust valve **64***b* of the second adsorber bed B is closed. This halts the purging of the second adsorber bed B. In step **5**, after another 0.6 seconds, the three-way valve **54***b* is switched from a condition allowing gas to flow from the second adsorber bed, to a condition allowing gas to flow into the adsorber bed from the feed gas conduit **52**. After approximately 20 more seconds, the selectable feed gas inlet valve **56***b* to the second adsorber bed B is opened. As is apparent from the table, the adsorption process continues with a similar sequence of valve openings and closings for the entire cycle, until at step **18** the cycle repeats.

[0072] **FIG. 5** illustrates the time periods T_0-T_{12} and the operational states of each of the adsorber beds A, B, C. The duration of each of the intervals is also given in this chart. Thus, it can be seen that, for example, during times T_1-T_3, bed A is on-line for 90 seconds. Likewise, during the time intervals T_5-T_7 and T_{10}-T_{12}, the beds B and C are on-line, respectively, for 90 seconds each. The time between one bed being on-line for 90 seconds and another bed being on-line for 90 seconds is relatively short. Therefore, at times T_4 and T_8, both of the adsorber beds A and B are on-line for a short period of time during the transition from A to B. Likewise at time T_8, both of the beds B and C are on-line during the transition from the on-line 90 seconds of the bed B to the on-line 90 seconds of the bed C.

[0073] In addition, each of the beds are purged for a length of time greater than its on-line time. Therefore, for example, bed A is purged between times T_6 and T_{10}, for a total of 140 seconds. The same applies to the second and third adsorber beds B and C. To accomplish this, two beds are purged purged at the same time. For example, at time T_2, beds B and C are both being purged for 50 seconds. Likewise, at times T_6 and T_{10}, two beds are being purged at the same time for 50 seconds each. This arrangement greatly increases the efficiency of the system and allows for reduced size of the physical components.

[0074] It is preferable that the valve frequency be controlled automatically, since the operational times for the valves in each sequence can be from fractions of a second up to three minutes, making it very difficult to control manually. Indeed, the valves are preferably controlled by a central processing unit (CPU) with instructions from a user input. The particular CPU is not critical, and desirably an off-the-shelf programmable logic controller is used, the specific timing sequences being input via an EPROM chip.

[0075] The preferred control method involves calculating the specific intervals in which the three adsorber beds are on-line, purging, repressurizing and depressurizing. These intervals may be determined from an analysis of the system size and flow parameters, or from empirical testing of a particular system or scale prototype. The knowledge of the specific intervals allows easy and trouble-free operation or programming of the control sequence, and monitoring of the operation of the system can identify areas in which the sequence is less than optimal, thus prompting a revision to the sequence. Alternatively, however, a system of sensors place in strategic locations in and around the adsorber beds may be used to provide feedback for dynamically controlling the adsorption process. For example, the level of impurities may be detected by a sensor placed near the output end of each bed to determined when that bed has reached capacity and must be purged. Likewise, a pressure sensor may be placed in each bed to sense when the steps of repressurizing and depressurizing are complete. In sum, one of skill in the art will recognize that although a fixed interval sequence is described and shown herein, other more elaborate control systems may be implemented.

[0076] Further increasing the efficiency of the system, if the purge gas is derived from the waste gas stream of the cryogenic distillation process, valve **78** can be closed when the process is near full operation, further conserving feed gas flow and reducing the horsepower requirements of the total system.

[0077] The following specific example illustrates the improved efficiency of the present system. It is determined that the desired purge factor is 2 (purge gas volume to feed gas volume) for satisfactory purging of the adsorber beds and that it requires 20 seconds each to depressurize and repressurize the adsorber beds without damage to the non-immobilized adsorbent material within. The nonimmobilized beds are much less expensive and are easier to replace than immobilized beds, and also lend themselves to partial replacement in the field. Of course, where immobilized adsorbent material is used, depressurizing and repressurizing the adsorber bed can be accomplished more quickly.

[0078] The following process conditions prevail:

Process pressure	P_1 =	140 psig
Purge pressure	P_2 =	2 psig
Atmospheric pressure	P_{atm} =	14.7 psig
Feed gas flow rate	$Q_{f,atm}$ =	600 scfm (cubic feet per minute at standard atmospheric conditions)
Purge Factor	PF =	2

[0079] The volumetric flow rate Q_1 for the on-stream adsorber bed is:

$$Q_f=(Q_{f,atm}\times P_{atm})/(P_1+P_{atm}),\text{ or}$$
$$(600\times 14.7)/(140+14.7)=57\text{ cubic feet per minute (cfm)}$$

[0080] If the adsorber beds have an on-stream time of 90 s (1.5 min), the total volume of feed gas Vol_f during the on-stream period is:

$Vol_f = t \times Q_1$, or

1.5×57=85.5 cubic feet

[0081] The purge gas volume Vol_p required is:

$Vol_p = PF \times Vol_f$, or

2×85.5=171 cubic feet, where

PF (Purge Factor)=2

[0082] Two-Bed PSAs

[0083] The purge time is t_p available for 2 bed PSA is:

90−20−20=50 s

[0084] To get 171 cubic feet of purge gas at 2 psig in a 50-second period requires:

$Q_{p,atm} = (Vol_p/t_p) \times (P_2 + P_{atm})/P_{atm}$, or

171/(50/60)×(14.7+2)/14.7=233 scfm

[0085] The net flow rate available for the process is:

$Q_{net} = Q_{f,atm} - Q_{p,atm}$, or

600−233=367 scfm

[0086] If the waste gas stream from the cryogenic distillation process were used, the process could only utilize 367 scfm for the final product, an efficiency of 61%.

[0087] Three-Bed PSAs

[0088] In contrast, the purge time t_p available for the three-bed system is

2×90−20−20=140 seconds

[0089] During this 140-second period, the purge gas will be going through two adsorber beds in parallel for 50 seconds (t_1) and through one bed alone for 40 seconds (t_2). To get 171 cubic feet of purge gas at 2 psig in this 140-second period requires:

$Q_{f,atm} = (Vol_p/t_p) \times (P_2 + P_{atm})/P_{atm}$, or

171×(60/140)×(14.7+2)/14.7=83.3 scfm average flow rate

[0090] Since only half of the actual flow rate passes through a bed for 100 seconds of the total 140-second purge period, the actual purge gas flow rate required is:

$Q_{req} = (Q_{avg} \times t_p)/(0.5 \times t1 + t2)$

(83.3×140)/(0.5×100+40)=130 scfm

[0091] The net flow rate available for the cryogenic distillation process is:

$Q_{net} = Q_{f,atm} - Q_{p,atm}$, or

600−130=470 scfm

[0092] If the waste gas stream from the cryogenic distillation process were used, the process could use 470 scfm for the final product, an efficiency of 78%. The improvement realized by utilizing the three-bed pressure-swing adsorber system is 28%; the process efficiency is improved from 61% to 78%.

[0093] Longer Two-Bed Systems

[0094] If the two-bed pressure-swing adsorber system were to have an on-stream time of 15 minutes, the feed gas volume Vol_f required would be:

$Vol_f = Q_f \times t$

57×15=855 cubic feet

[0095] The purge volume would be:

$Vol_p = PF \times V_{olf}$, or

2×855=1710 cubic feet, where

PF (Purge Factor)=2

[0096] The purge time t_p for this two-bed pressure-swing adsorber system would be

15−(40/60)=14⅓ minutes

[0097] To get 1710 cubic feet of purge gas at 2 psig in 14⅓ (43/3) minutes requires:

$Q_{p,atm} = (Vol_p/t_p) \times (P_2 + P_{atm})/P_{atm}$, or

1710(3/43)×(2+14.7)/14.7=135.5 scfm

[0098] This is still less than the three-bed pressure-swing adsorber. To extend the on-stream time to 15 minutes, the adsorber beds would have to be about 10 times as long as the three-bed pressure-swing adsorber system and about 6.7 times the weight. Also, because of the additional volume of the beds, it would likely require nearly 10 times as long to safely depressurize and repressurize the beds. The additional time has not been accounted for in this analysis. This would further reduce the efficiency gains achieved from longer on-stream times.

[0099] The following table graphically illustrates the improved efficiency and other benefits of the present three-bed, nonimmobilized, rapid pressure-swing adsorber **50** versus the short and long two-bed systems.

TABLE 1

System	Efficiency	Process Time	Bed Size	Pressurization Rate	Depressurization Rate
Preferred System	78%	90 seconds	20" D × 27" L × 3	138 psi in 20 seconds	138 psi in 20 seconds
2-Bed PSA	61%	135 seconds	20" D × 27" L × 2	138 psi in 7 seconds	138 psi in 1 second
2-Bed Lengthened PSA System	77%	15 minutes	20" D × 270" L × 2	138 psi in 70 seconds	138 psi in 10 seconds

[0100] With reference to **FIGS. 6-11**, an exemplary pressure-swing adsorber unit **24** is illustrated therein to provide further detail as to the environment of use at the present adsorber bed assembly. The components of the pressure-swing adsorber unit **24** illustrated in **FIG. 6** includes the same reference numerals used in **FIG. 1**. Thus, a further description of the components already described above will not be repeated.

[0101] With reference to **FIG. 6**, the filter **22** noted above with reference to **FIG. 1**, in the illustrated exemplary embodiment, comprises three filters **120**, **122**, **124**. The filter **120** comprises a commercially available water separator filter. The filters **122** and **124** can comprise commercially available high and ultrahigh efficiency filters, respectively. Each of the filters **120**, **122**, **124** preferably include drain valves **126** to facilitate draining of liquids therefrom.

[0102] The filters **120**, **122**, **124** are connected in series along the feed gas line **52**. Additionally, the illustrated pressure-swing adsorber unit **24** includes pressure transducers **128** for monitoring the pressure therein.

[0103] With reference to **FIG. 8**, each of the adsorber bed assemblies A, B, C includes an adsorber bed housing **130**. The housing **130** includes at least one wall member **132** and upper and lower lid members **134**, **136**.

[0104] With reference to **FIG. 9**, the upper lid member assembly **134** comprises a plate member **138** which is configured to sealedly engage the wall assembly **132**. In the illustrated embodiment, the plate member **138** is generally circular in shape and includes a plurality of clamping apertures **140** disposed around a periphery thereof. The upper lid assembly **134** includes an inlet aperture **139** configured to receive feed gas from the feed gas pipe **52**. The lower lid assembly **136** includes an outlet **141** configured to discharge filtered gas to the discharge pipe **68**.

[0105] In the illustrated embodiment, the wall assembly **132** comprises a cylinder member **142**. The plate member **138** includes a central thickened portion **144** defining an outwardly facing wall **146**. The outer diameter of the outer facing wall **146** is sized so as to form tight engagement with an inner surface of the cylinder member **142**.

[0106] Preferably, the thickened portion **144** also includes an O-ring groove **148** defined in the outer surface **146**. The O-ring groove **148** is configured to retain an O-ring **150** to provide an enhanced seal between the outer surface **146** and the inner surface of the cylinder member **142**.

[0107] The lower lid assembly **136** can be configured similarly or identically as the upper lid assembly **134**. The details of the lower lid assembly **136** will not be described further. Rather, the description of the upper lid assembly **134** set forth below also applies to the lower lid assembly **136**. Thus, components of the upper lid assembly **134** that correspond to the same or similar components of the lower lid assembly **136** will be identified with the same reference numerals.

[0108] Together, the upper lid assembly **134**, the lower lid assembly **136**, and the wall assembly **132** define an interior chamber **152**. The housing **130** preferably includes at least one clamping device configured to apply a clamping force to retain the upper and lower lid assemblies **134**, **136** to open ends of the wall assembly **132**. In the illustrated embodiment, the housing **130** includes a plurality of tie rods **154** configured to retain the upper and lower lid assemblies **134**, **136** to the open ends of the cylinder member **142**. In the illustrated embodiment, the tie rod assemblies **154** comprise an elongate rod member **156** with threaded ends **158**. The elongate bodies **156** are sized so as to pass through the apertures **140** defined in the upper and lower lid assemblies **134**, **136**. Nuts **160** are threadedly engaged with the ends **158** so as to apply a clamping force to the upper and lower lid assemblies **134**, **136** so as to retain the assemblies **134**, **136** to the open ends of the cylinder member **142**.

[0109] The housing **130** also includes a compression assembly **162**. The compression assembly **162** comprises a screen member **164** and spring units **166**.

[0110] **FIG. 11** illustrates a top plan view of the screen assembly **164**. As shown in **FIG. 11**, the screen assembly comprises a perforated screen member **168** that is sized having an outer diameter approximately equal to that of the inner diameter of the cylinder member **142**. The screen member **168** can be made from a thin rigid material having a plurality of holes **170** disposed therein. The holes **170** are sized so as to be smaller than the beads forming the adsorbent material disposed within the chamber **152**, described in greater detail below.

[0111] The screen assembly **164** also comprises a seal member **172** extending around the periphery thereof. In the illustrated embodiment, the seal member **172** is a ring seal configured to form a tight fit or an interference fit with the inner surface of the cylinder member **142**. A plurality of clips **174** are disposed around the periphery of the screen member **168** and are configured to retain the ring seal **172** against the screen member **168** and the inner surface of the cylinder member **142**. In the illustrated embodiment, the clips **174** secured to the screen member **168** with screws **176**. Of course, other types of fastening arrangements can be used.

[0112] With reference again to **FIG. 10**, the compression assemblies **166** include a carrier member **178**, a loading member assembly **180** and a plurality of pressing members **182**. As shown in **FIG. 11**, the carrier members **178** are generally disk shaped and include a plurality of mounting apertures **184** configured to receive the pressing members **182**.

[0113] **FIG. 11*a*** illustrates a partial sectional view of a portion of one of the carrier plates **178** and including two pressing members **182**, one being illustrated in an extended position and one illustrated in a retracted position. Each of the pressing member assemblies comprises a body member **190** extending through the aperture **184**. An outer end **192** of the body member **190** is enlarged to a size greater than that of the aperture **184**. An inner end of the body member **190** includes a pressing portion **194** which is also enlarged to a size greater than that of the aperture **184**. Thus, the body member **190** is retained within the aperture **184**.

[0114] Additionally, the pressing member assemblies include a biasing member **196** configured to bias the body member toward an inward direction, in the direction of arrow I. The biasing member can be any type of device that can be configured to provide a biasing force. In the illustrated embodiment, the biasing member **196** is a coil spring.

[0115] With reference again to **FIG. 10**, the loading member assembly **180** is configured to adjust a position as a carrier member **178** relative to the plate member **138** of the upper lid assembly **134**. In the illustrated embodiment, the loading member assembly **180** is comprised of a bolt **200** and a set of nuts **202**, **204** for fixing the position of the bolt **200** relative to the plate **138**. The bolt extends through a threaded aperture defined in the plate **138**.

[0116] When adjusted inwardly the bolt **200** acts against the retainer member **178** so as to move the carrier member

178 inwardly toward the chamber 152. During installation, when the bolt 200 is turned to the desired position, the nut 204 is tightened so as to fix the rotational position of the bolt, thereby fixing the position of the carrier plate 178. Additionally, the nut 202 is used to compress a sealing member 203 against the upper surface of the plate 138, thereby sealing the aperture through which the bolt 200 extends.

[0117] The arrangement of the pressing members 182 about the carrier member 178 acts to distribute the load more evenly about the screen member 168. Additionally, the biasing members 196 act to distribute the load evenly despite irregularities in the shape of the screen member 168.

[0118] As shown in FIG. 11, a plurality of compression assemblies 166 are arranged around the screen member 168. Additionally, a similar or identical arrangement of compression assemblies 166 are provided at the lower end of the housing 130 and mounted relative to the lower lid assembly 136.

[0119] The screen members 168 cooperate with the inner surface of the cylinder member 142 to define a chamber for retaining adsorbent beads therein, under compression. When the adsorbent beads within the chamber are not immobilized, a variety of sizes of beads preferably is used therein. For example, with reference to FIG. 10, layers of larger beads 210 are disposed adjacent the screen members 168. An intermediate layer of beads 212 can be disposed inwardly from the outer layers 210. Additionally, an inner layer of beads 214 can be disposed between the intermediate layers 212.

[0120] In one exemplary, but nonlimiting embodiment, the layer of beads 210 can comprise alumna-activated Grade A adsorbent beads having a diameter of approximately 0.188 inches. Such beads are commercially available from Alcoa, Inc. The intermediate layers of beads 212, in the exemplary embodiment, are available from Davidson, Inc. as molecular sieve material type 13×8½. Further, the inner layer beads 214 can comprise alumna-activated beads having a diameter of about 0.060-0.098 inches (Grade A) commercially available from Alcoa, Inc. Where the layers of beads 210, 212, 214 are nonimmobilized, the depressurization and repressurization of the chamber 152 within the adsorber bed A preferably is carried out slowly so as to minimize shocks imparted to the beads of the layers 210, 212, 214.

[0121] After prolonged use, despite attempts to minimize shock and abrasion, the beads of the layers 210, 212, and/or 214 can degrade. When the beads degrade, they can generate dust and particles which flow out of the housing 130 and into the downstream components of the system. Thus, the beads must periodically be replaced.

[0122] In order to replace the beads, within the housing 130, the housing 130 must be disassembled, emptied of the beads, and cleaned. After the housing 130 has been cleaned, the layers of beads 210, 212, 214 can be replaced and housing 130 reassembled. With the design illustrated in FIG. 10, it takes a worker approximately one week to disassemble, clean, refill, and reassemble the adsorber beds, such as the adsorber beds A, B, C.

[0123] Because the layers of beads 210, 212, 214 are not immobilized, the replacement of the layers of beads 210, 212, 214 can be performed on site. An immobilization process such as that referred to above as being owned by Pall Safety Atmospheres, Inc. would require the entire housing 130 to be sent to a facility appropriate for performing the proprietary process of being filled with adsorbent beads, coated with an immobilizing agent, and cured. Due to the potential transportation cost and time required therefore, refilling the housing 130 immobilized beads can be far more expensive than refilling the housing 130 with non-immobilized beads.

[0124] FIGS. 12-16 illustrate an improved adsorber bed, identified generally by the reference numeral A'. A components of the adsorber bed A' that are the same or similar to the adsorber bed A are identified with the same reference numerals, except that a "'" has been added thereto.

[0125] As shown in FIG. 12, the upper lid assembly 134' of the adsorber bed assembly A' can include a plate member 138' that can be similar or essentially identical to the plate 138. As shown in FIG. 13, the adsorber bed assembly A' includes a removable cartridge assembly 220. The cartridge assembly 220 includes a wall assembly 222 and upper and lower screen assemblies 224, 226.

[0126] The wall assembly 222 can comprise a cylinder member 228 having an outer surface 230 and an inner surface 232. The outer surface 230 of the cylinder member 228 can define an outer diameter that is configured to form a tight fit with the inner surface of the cylinder member 142'. As such, a flow of feed gas entering the inlet 139' is directed through the interior chamber 152' and is prevented from flowing between the outer surface 230 of the cylinder member 228 in the inner surface of the cylinder member 142'.

[0127] Preferably, the outer surface 230 of the cylinder member 228 includes a sealing assembly 234. The sealing assembly 234 advantageously is configured to enhance a seal between the outer surface 230 and the inner surface of the cylinder member 142'.

[0128] In the illustrated embodiment, the seal assembly 234 comprises an O-ring groove 236 defined on the outer surface 230 and an O-ring 238 disposed in the O-ring groove 236 and configured form a seal against the inner surface of the cylinder member 142'. The size and type of the O-ring 238 can be determined by one of ordinary skill in the art. Further, it is to be noted that it is not necessary for the seal assembly 234 to withstand the pressure differential between the interior chamber 152' and the atmosphere during operation. Rather, the seal assembly 234 can be configured merely to withstand the pressure differential or "head loss" generated by the flow of feed gas from the inlet 139' to the outlet 141'. Additionally, one of ordinary skill in the art should note that because the cylinder member 142' will be subject to the pressure differential generated by the pressure of feed gas within the interior chamber 152' and the atmosphere outside of the cylinder member 142'. As such, the sidewalls of the cylinder member 142' can deflect outwardly. Thus, the seal assembly 234' should be constructed in light of this potential outward deflection.

[0129] Because the wall assembly 222 is not subject to the full pressure differential, during operation, between the interior chamber 152' and the atmosphere outside of the cylinder member 142', the wall assembly 222 can be constructed in a lighter strength configuration than that of the cylinder member 142'. For example, the cylinder member

228 can be constructed to withstand a pressure of, for example, but without limitation, no more than about 100 psig. As such, the cost and weight of the removable cartridge assembly **220** can be lowered. Reducing the weight of the removable cartridge assembly **220** further simplifies removal and installation of the removable cartridge assembly **220**.

[**0130**] The screen assemblies **224**, **226** can each comprise a screen member **240**. With reference to **FIG. 14**, the screen member **240** can be constructed in the same manner as the screen member **168**. The outer peripheral edge **242** of the screen member **240** can define a diameter that forms a tight fit with the inner surface **232** of the cylinder member **228**. Thus, adsorbent material disposed within the interior chamber **152'** is contained therein by the screen member **240**.

[**0131**] With reference again to **FIG. 13**, the open ends of the cylinder member **228** can define recessed portions **244**. The inner surface of the recessed portion **244** can define an inner diameter that is larger than the diameter of the inner surface **232**. The transition between the inner surface **228** and the recessed portion **244** can thus define a step **246**.

[**0132**] Preferably, the outer peripheral edge **242** of the screen member **240** forms a tight fitting engagement with the recessed portion **244**. Further, the outer peripheral edge **244** preferably defines an outer diameter that is larger than the inner diameter of the inner surface **232**. As such, the step **246** can define a stop for the screen member **240**.

[**0133**] With reference to **FIG. 15**, at least one of the upper and lower ends of the cylinder member **228** includes at least one aperture **250** extending therethrough. As such, the apertures **250** can facilitate lifting and movement of the cylinder member **228**. Preferably, the cylinder member **228** includes a plurality of apertures **250** disposed around an upper periphery thereof. The apertures **250** can be used as hoist points for installing and removing the cylinder member **228** from the interior of the housing **130'**.

[**0134**] In the illustrated embodiment, the cylinder member **228** includes one type of adsorbent bead material **252**. For example, the adsorbent material **252** can be a small diameter adsorbent bead. Where only one size bead is used, the beads preferably have a smaller diameter, thereby providing a higher surface area to volume ratio and thus a high rate of adsorbency. In the adsorber bed A illustrated in **FIG. 10**, three different sizes of adsorbent beads were used. For example, the uppermost and lowermost layers **210** of the beads will have a larger diameter than the innermost layer of beads **214** so as to aide in preventing the smallest beads from passing through the screen members **168**. Thus, where only one size of small adsorbent beads are used, as schematically illustrated in **FIG. 15**, the adsorbent material **252** preferably is immobilized with the process such as that noted above as being owned by Pall Safety Atmospheres, Inc.

[**0135**] The removable cartridge **200** provides a low cost and low weight vessel for transporting and storing adsorbent, absorbent, or other materials, in a ready-to-use state. For example, one or a plurality of cylinder members **228** with screen members **240** can be transported to a facility for filling and processing with an immobilizing agent. Thereafter, with the screen members **240** installed on the open ends of the cylinder member **228**, the filled and immobilized assembly can be shipped to the location of a user of the pressure-swing adsorber unit **24** utilizing the adsorber bed A' illustrated in **FIGS. 12-14**. Thereafter, a user or technician can quickly remove one used cartridge **200** from the housing **130'** and replace it with a new cartridge **200** containing mobilized or immobilized material. This greatly reduces the time required for exchanging adsorbent material out of an adsorber bed. Thus, a user of such a pressure-swing adsorber unit **24** can achieve the benefits of faster depressurization and repressurization rates appropriate for immobilized adsorber material systems and the reduced time required for replacing used adsorber material. Thus, such a user can achieve substantial cost savings and increased productivity.

[**0136**] Although the present invention has been described in terms of a certain embodiment, other embodiments apparent to those of ordinary skill in the art also are within the scope of this invention. Thus, various changes and modifications may be made without departing from the spirit and scope of the invention. For instance, various components may be repositioned as desired. Moreover, not all of the features, aspects and advantages are necessarily required to practice the present invention. Accordingly, the scope of the present invention is intended to be defined only by the claims that follow.

What is claimed is:

1. A pressure swing absorber unit comprising a housing defining an interior chamber, a removable cartridge assembly removably disposed in the interior chamber, the removable cartridge assembly comprising a wall assembly defining an absorber chamber, inlet and outlet screen members, and an absorber material disposed in the wall assembly, the inlet and outlet screen members being configured to retain the absorber material within the absorber chamber.

2. The pressure swing absorber unit according to claim 1, wherein the housing comprises a first cylinder, the wall assembly of the removable cartridge comprising a second cylinder disposed coaxially in the first cylinder.

3. The pressure swing absorber unit according to claim 2, wherein the first cylinder is configured to withstand a pressure of at least about 140 psig, the second cylinder being configured to withstand a pressure of no more than 100 psig.

4. The pressure swing absorber unit according to claim 1, wherein the removable cartridge assembly further includes hoist points at an upper end thereof.

5. The pressure swing absorber unit according to claim 1, wherein the absorber material comprises a plurality of beads.

6. The pressure swing absorber unit according to claim 1, wherein the removable cartridge assembly comprises a seal disposed on an outer surface thereof configured to form a seal between an outer surface of the removable cartridge and an inner surface of the housing.

7. A removable adsorbent bed cartridge for a swing type adsorber system comprising a wall assembly defining an open inlet and an open the outlet, a plurality of adsorbent members disposed in the wall assembly, a first perforated member disposed at the inlet end and a second perforated member disposed at the outlet end, the first and second perforated members being configured to retain the adsorbent members therein, the wall assembly being configured to be received within a housing of an adsorber bed assembly of the swing type adsorber system.

8. The cartridge according to claim 7, wherein the cartridge is further configured to form a seal between an outer surface of the wall assembly and an inner surface of the housing, at a location between the inlet and outlet ends of the wall assembly.

9. The cartridge according to claim 7, wherein the seal is provided by an o-ring disposed on an outer surface of the wall assembly.

10. The cartridge according to claim 9, wherein the o-ring is configured to withstand a pressure differential generated by the head loss associated with the adsorbent material during operation of the swing type adsorber system.

11. The cartridge according to claim 7, wherein the wall assembly is cylindrical.

12. The cartridge according to claim 7 additionally, comprising a flange extending from the first open end of the wall assembly and a plurality of apertures disposed in the flange.

13. The cartridge according to claim 12, wherein the apertures in the flange are configured to provide hoist points for the cartridge.

14. The cartridge according to claim 7, wherein the wall assembly is configured to withstand a pressure of no more than about 100 psig.

15. The cartridge according to claim 7, wherein the wall assembly further comprises an inner surface and a recessed area disposed on the inner surface adjacent the inlet end.

16. The cartridge according to claim 15, wherein the first perforated member includes an outer peripheral edge disposed in the recessed area.

17. The cartridge according to claim 16, wherein the peripheral edge defines a diameter that is greater than an inner diameter of a portion of the inner surface adjacent the recessed portion.

18. The cartridge according to claim 17, wherein a step is defined at the inner side of the recessed portion.

19. A removable adsorbent bed cartridge for a swing type adsorber system comprising a wall assembly defining an open inlet and an open the outlet, a plurality of adsorbent members disposed in the wall assembly, a first perforated member disposed at the inlet end and a second perforated member disposed at the outlet end, the first and second perforated members being configured to retain the adsorbent members therein, and means for forming a seal between an outer surface of the wall assembly and an inner surface of a housing of an adsorber bed assembly of the swing type adsorber system.

20. The cartridge according to claim 17 additionally comprising means for allowing the adsorbent material to be mechanically compressed after it is installed in the housing.

* * * * *