US008271619B1

(12) **United States Patent**
Cope et al.

(10) **Patent No.: US 8,271,619 B1**
(45) **Date of Patent: Sep. 18, 2012**

(54) **ESTABLISHING END-USER COMMUNICATION SERVICES THAT USE PEER-TO-PEER INTERNET PROTOCOL CONNECTIONS BETWEEN SERVICE PROVIDERS**

(75) Inventors: **Warren B. Cope**, Olathe, KS (US); **Harold W. Johnson**, Roach, MO (US)

(73) Assignee: **Sprint Communications Company, L.P.**, Overland Park, KS (US)

(*) Notice: Subject to any disclaimer, the term of this patent is extended or adjusted under 35 U.S.C. 154(b) by 3607 days.

(21) Appl. No.: **09/947,819**

(22) Filed: **Sep. 5, 2001**

(51) **Int. Cl.**
G06F 15/177 (2006.01)
H04L 12/66 (2006.01)

(52) **U.S. Cl.** **709/220**; 370/352

(58) **Field of Classification Search** 709/230, 709/220–222; 370/351–356, 389, 409
See application file for complete search history.

(56) **References Cited**

U.S. PATENT DOCUMENTS

6,078,582 A * 6/2000 Curry et al. 370/352
6,345,047 B1 * 2/2002 Regnier 370/352
6,484,210 B1 11/2002 Adriano et al.
6,563,793 B1 5/2003 Golden et al.
6,584,093 B1 6/2003 Salama et al.
6,657,992 B1 * 12/2003 Christie, IV 370/352
6,714,535 B1 * 3/2004 Herh 370/352
6,724,749 B1 * 4/2004 Tashiro et al. 370/352
6,751,216 B2 * 6/2004 Johnson et al. 370/352
6,760,324 B1 * 7/2004 Scott et al. 370/352
7,933,279 B1 * 4/2011 Bradd et al. 370/401
2001/0018656 A1 * 8/2001 Weik et al. 704/270.1
2001/0036173 A1 * 11/2001 Shmulevich et al. 370/352
2002/0044567 A1 * 4/2002 Voit et al. 370/467
2002/0085696 A1 * 7/2002 Martin et al. 379/201.03
2002/0097463 A1 7/2002 Saunders et al.
2002/0101858 A1 * 8/2002 Stuart et al. 370/352
2002/0103850 A1 8/2002 Moyer et al.
2002/0114439 A1 8/2002 Dunlap
2002/0120759 A1 8/2002 Faccin et al.
2002/0141352 A1 10/2002 Fangman et al.
2002/0141386 A1 10/2002 Minert et al.
2002/0141390 A1 * 10/2002 Fangman et al. 370/352
2002/0169887 A1 11/2002 Mellampy et al.
2002/0186685 A1 * 12/2002 O'Brien et al. 370/352

(Continued)

FOREIGN PATENT DOCUMENTS

WO WO 01/39435 A2 5/2001

OTHER PUBLICATIONS

Jon Postel, Sep. 1981, Information Sciences Institute, RFC 791, Internet RFC/STD/FYI/BCP Archives.*

(Continued)

Primary Examiner — Chirag R Patel

(57) **ABSTRACT**

A method of establishing telephony service for an end-user comprises providing the end-user with a telephone number and software or a communication device, and configuring a second service provider to provide packet-based telephony service to the end-user over a peer-to-peer IP connection to a first service provider. The software or communication device includes a first IP address and packet telephony network addresses in network-bound ones of the IP packets. The first IP address is used by the first service provider to route the network-bound IP packets over a peer-to-peer IP connection to the second service provider. The packet telephony network addresses are used by the second service provider to provide the telephony service.

15 Claims, 11 Drawing Sheets

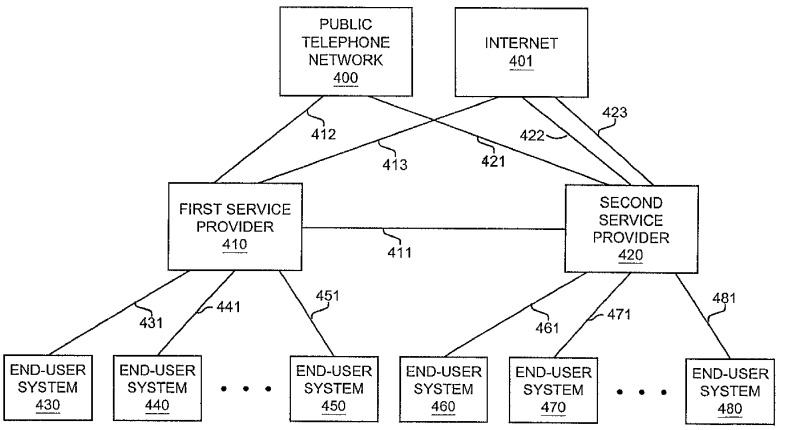

U.S. PATENT DOCUMENTS

2003/0002476	A1 *	1/2003	Chung et al.	370/352
2003/0083988	A1 *	5/2003	Reith	705/40
2003/0133454	A1 *	7/2003	Gallant et al.	370/395.1
2005/0041670	A1	2/2005	Lin et al.	

OTHER PUBLICATIONS

Semret, N.; Liao, R. R.F.; Campbell. T.; Lazar. A. A., "Peering and Provisioning of Differentiated Internet Services," IEEE Infocom 2000. pp. 414-420.

QoSWorks, Sitara Networks, Inc., Apr. 10, 2001; internet.

Contivity VPN Switches, A comprehensive product solution for IP VPN, Nortel Networks, Apr. 10, 2001; internet.

Subnet Bandwidth Manager-an overview; Technology Planning and Integration, Sprint.

Postel Jon, "Internet Portocol DARPA Internet Program Protocol Specification," Sep. 1981, Information Sciences Institute, RFC 791 (RFC791).

* cited by examiner

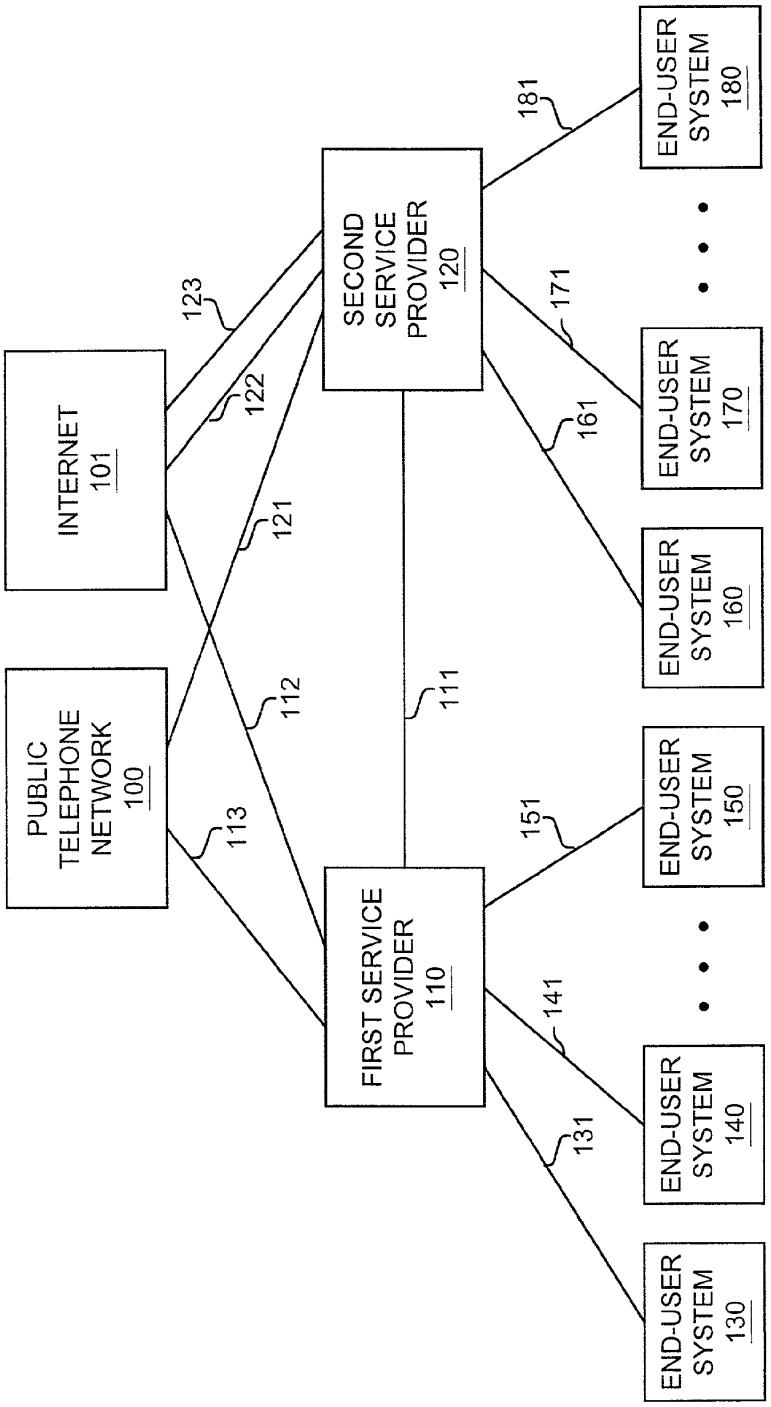

FIG. 1 - PRIOR ART

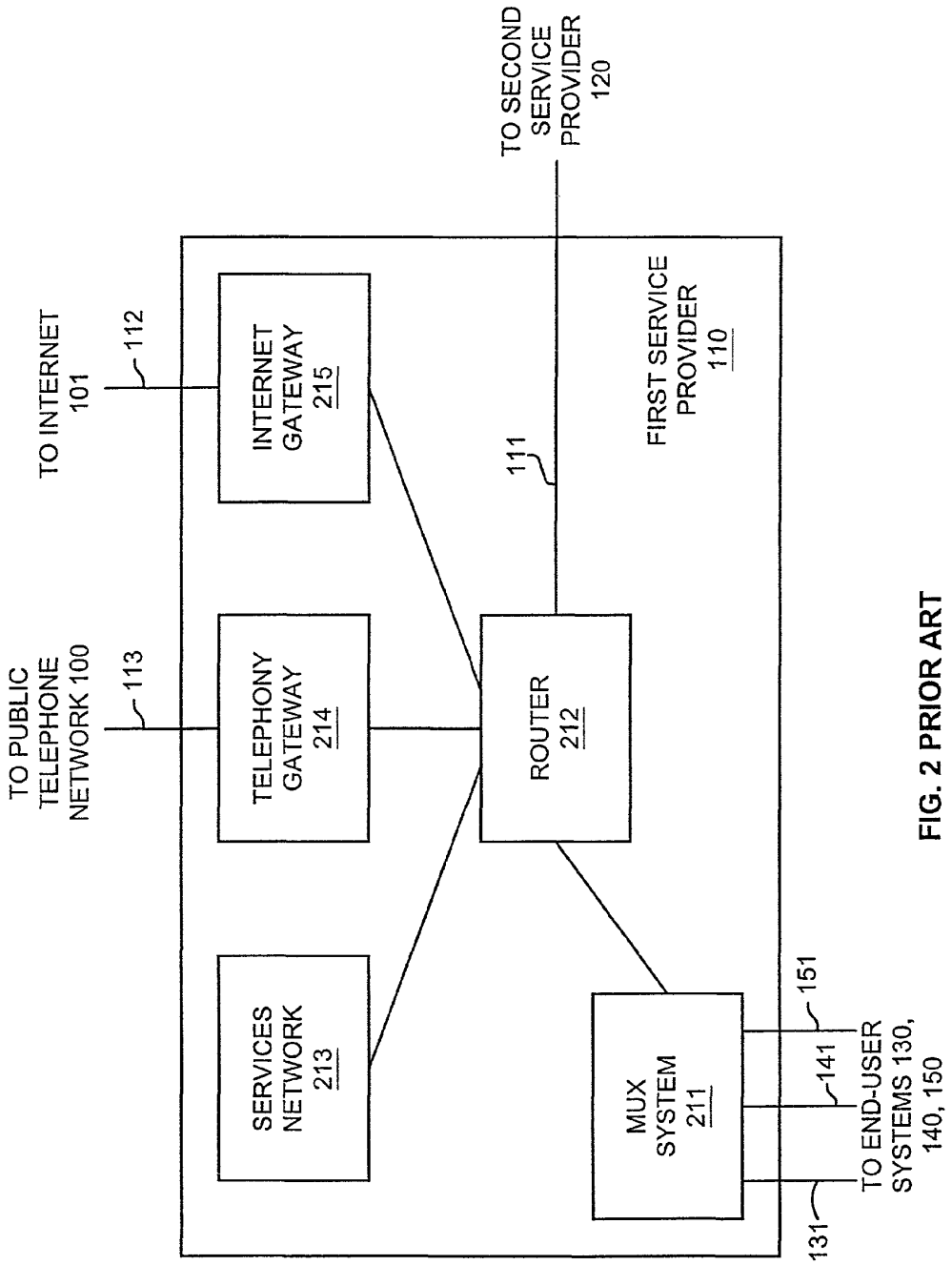

FIG. 2 PRIOR ART

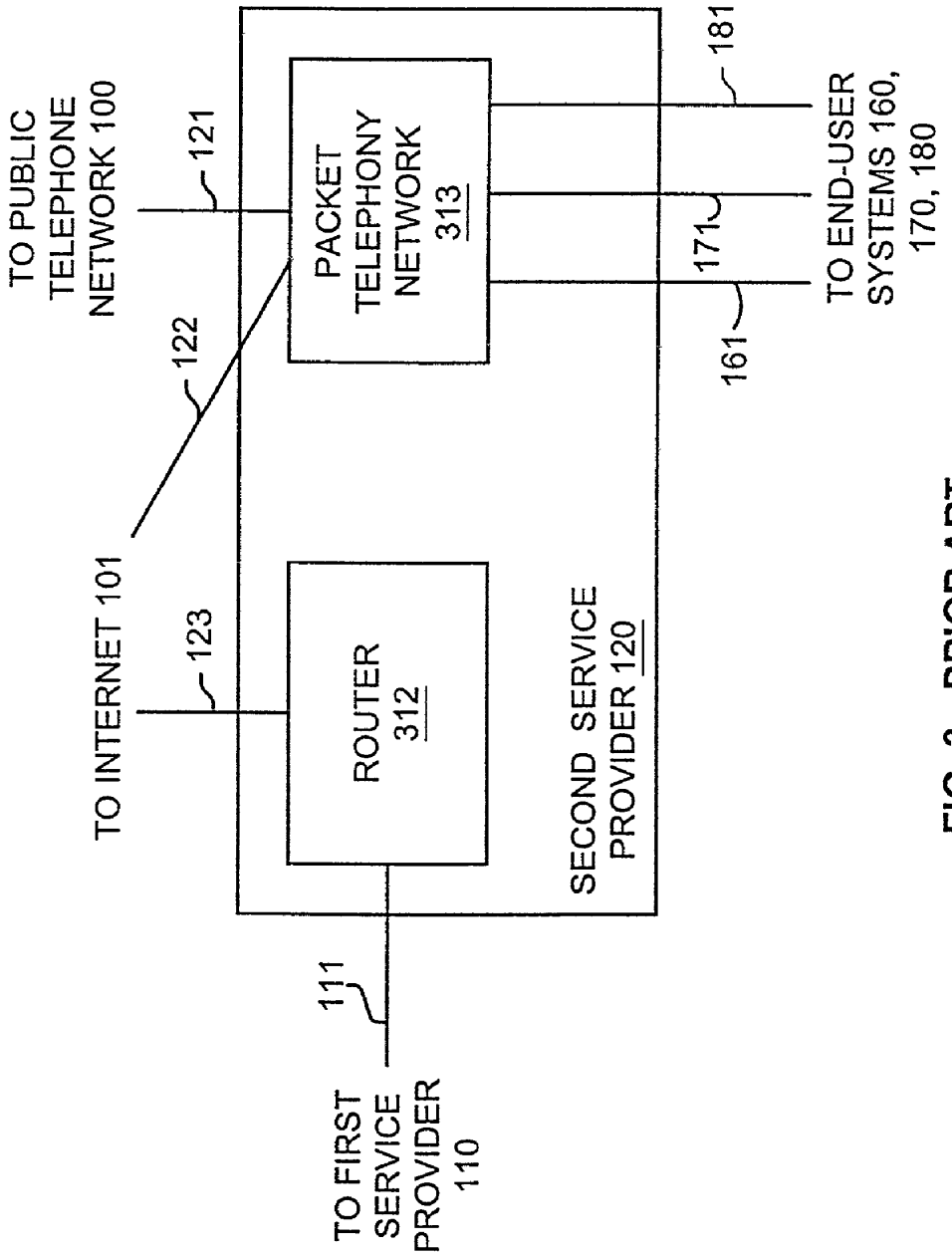

FIG. 3 - PRIOR ART

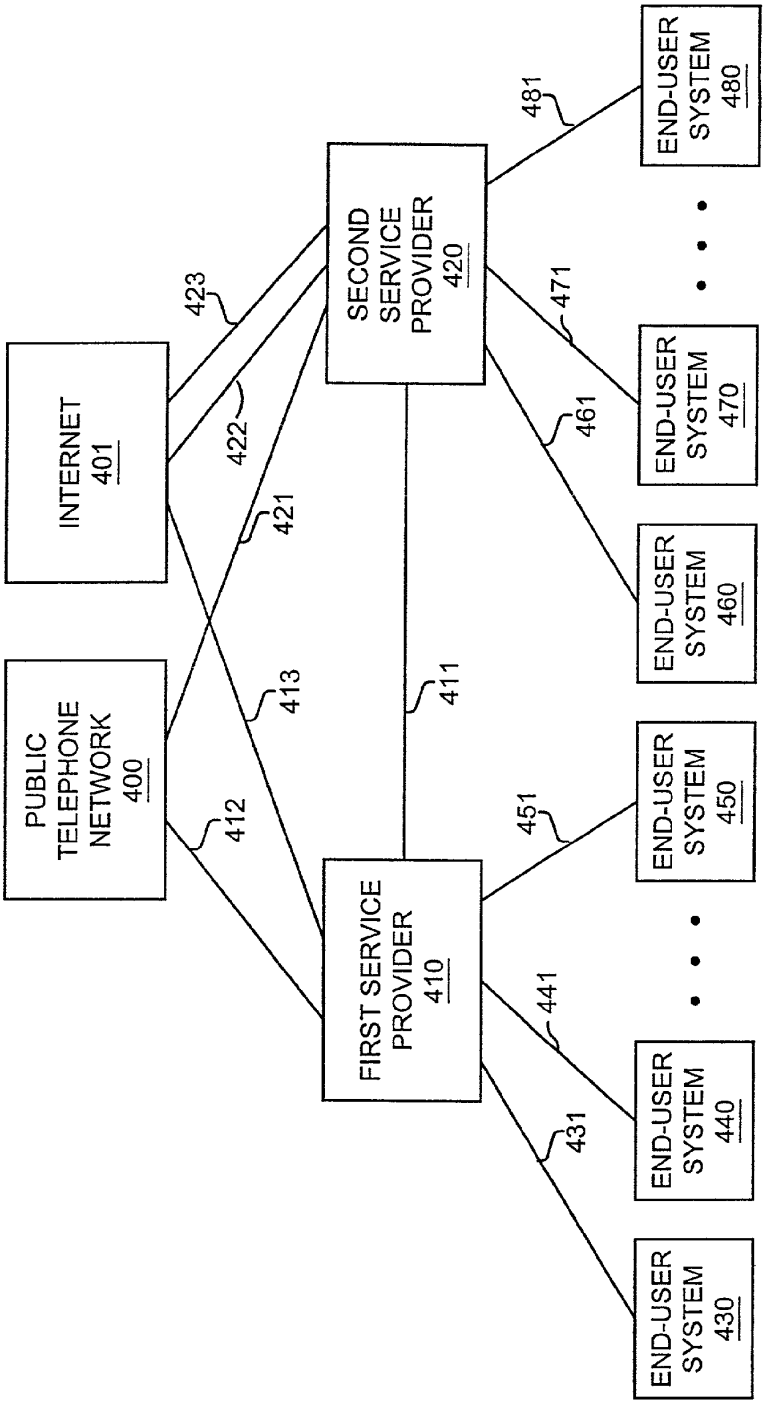
INTERNET
401
PUBLIC
TELEPHONE
NETWORK
400
SECOND
SERVICE
PROVIDER
420
FIRST SERVICE
PROVIDER
410
423
422
421
413
412
411
481
471
461
451
441
431
END-USER
SYSTEM
480
END-USER
SYSTEM
470
END-USER
SYSTEM
460
END-USER
SYSTEM
450
END-USER
SYSTEM
440
END-USER
SYSTEM
430

FIG. 4

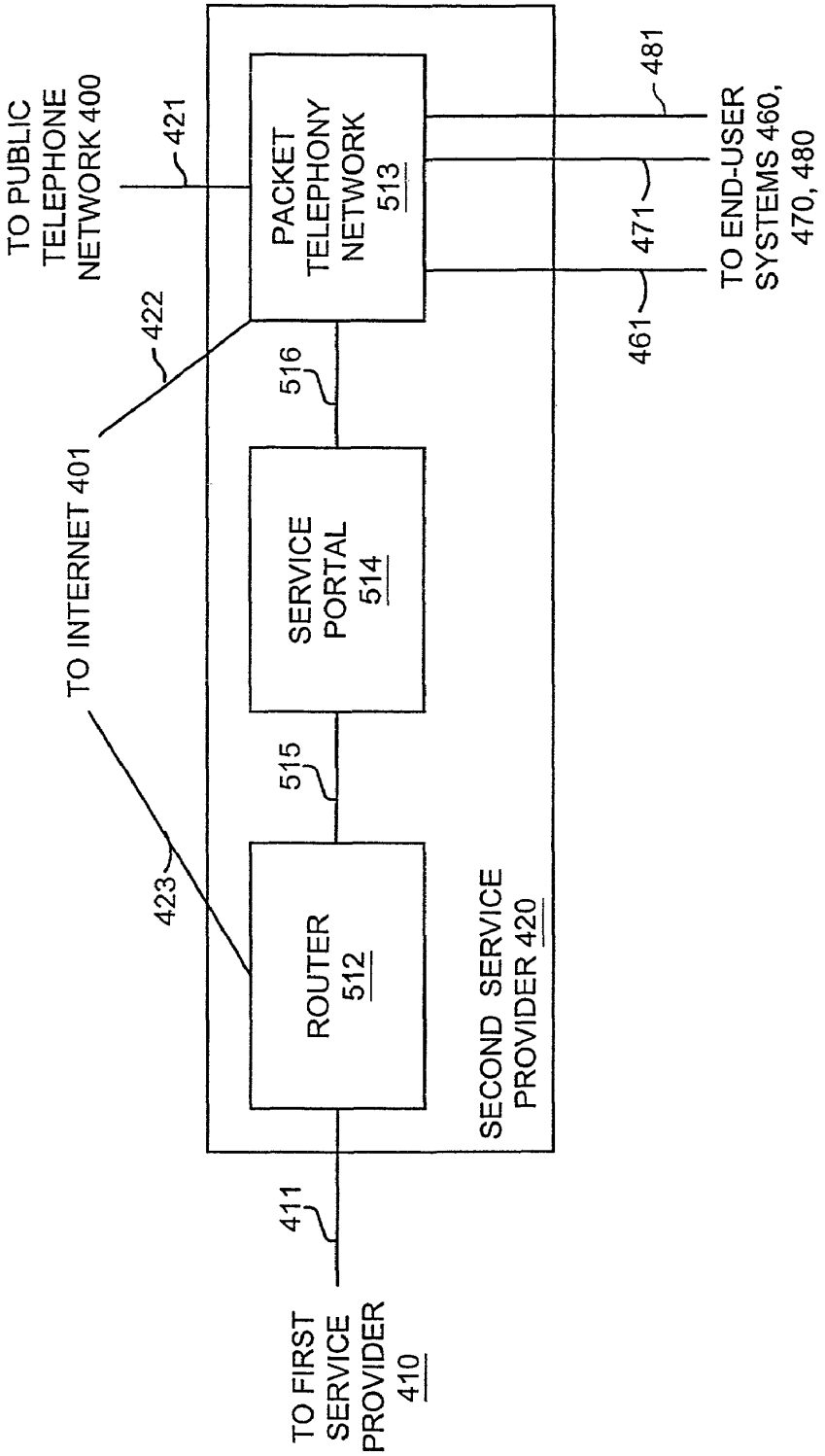
TO PUBLIC TELEPHONE NETWORK 400
421
422
TO INTERNET 401
423
PACKET TELEPHONY NETWORK 513
516
SERVICE PORTAL 514
515
ROUTER 512
411
TO FIRST SERVICE PROVIDER 410
SECOND SERVICE PROVIDER 420
481
471
461
TO END-USER SYSTEMS 460, 470, 480

FIG. 5

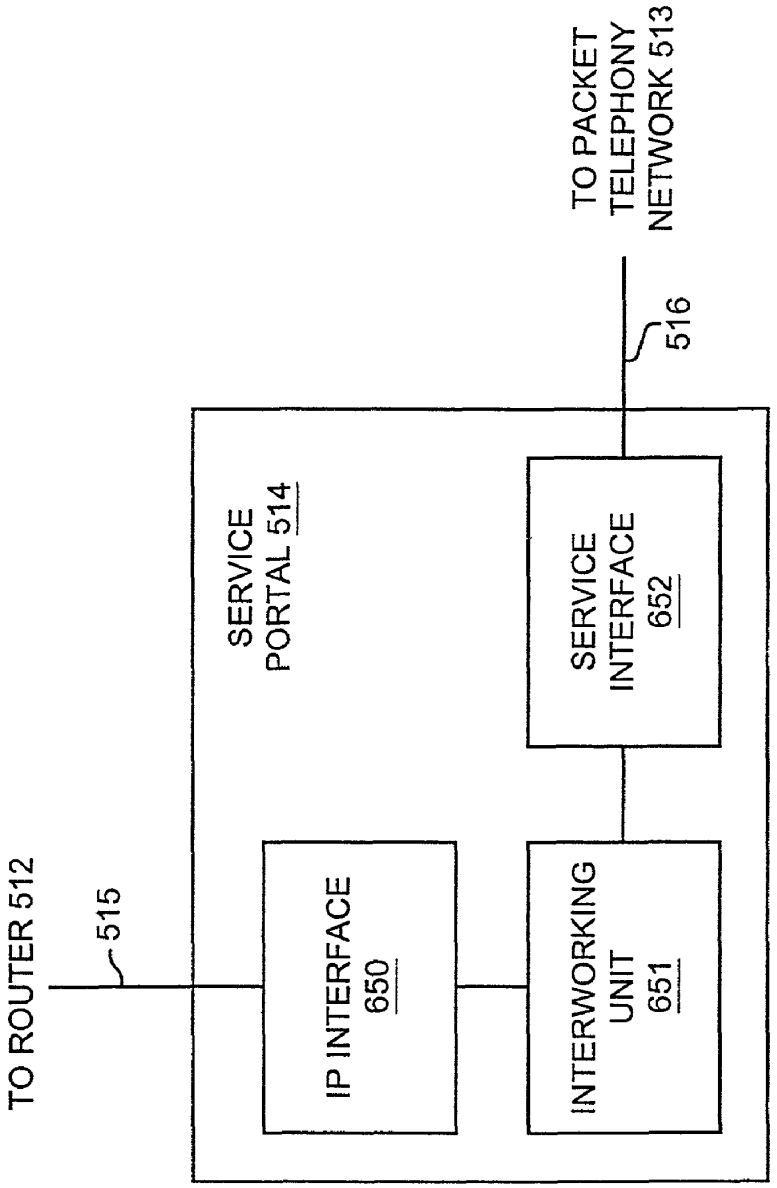
TO ROUTER 512
515
SERVICE PORTAL 514
IP INTERFACE 650
INTERWORKING UNIT 651
SERVICE INTERFACE 652
516
TO PACKET TELEPHONY NETWORK 513

FIG. 6

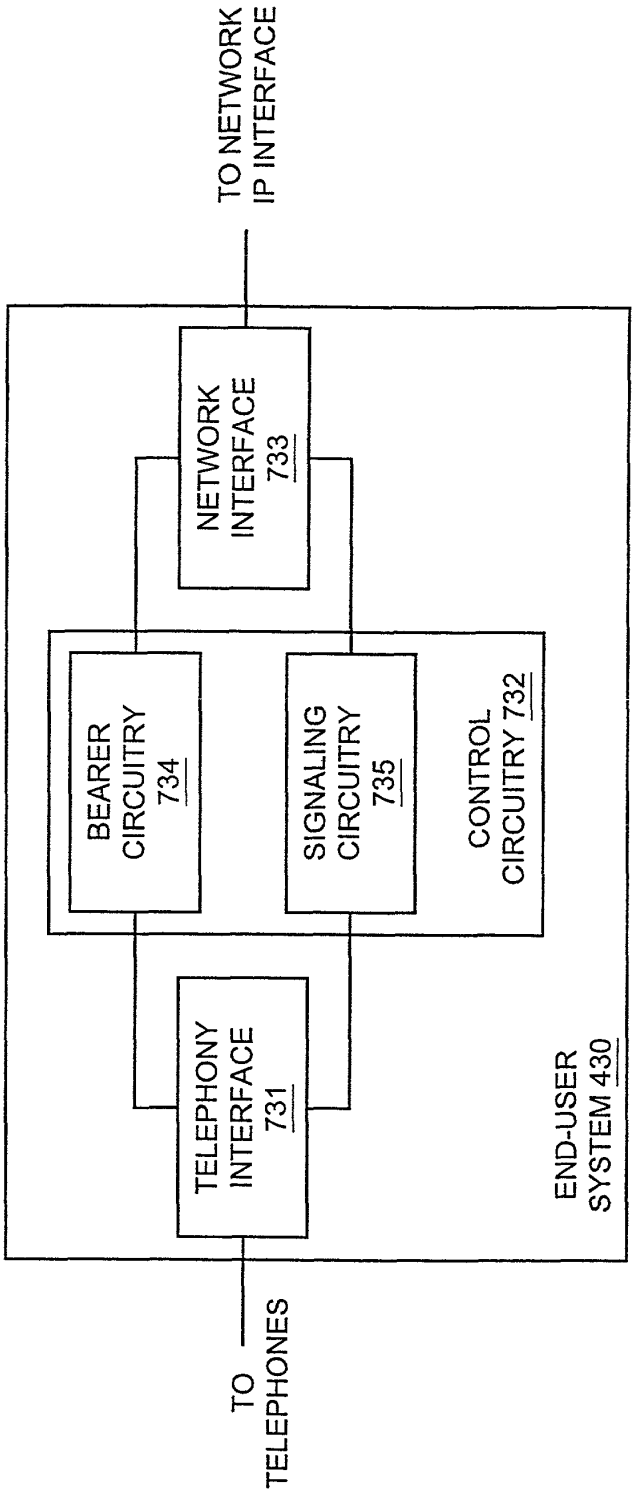
TO NETWORK IP INTERFACE
NETWORK INTERFACE 733
BEARER CIRCUITRY 734
SIGNALING CIRCUITRY 735
CONTROL CIRCUITRY 732
TELEPHONY INTERFACE 731
END-USER SYSTEM 430
TO TELEPHONES

FIG. 7

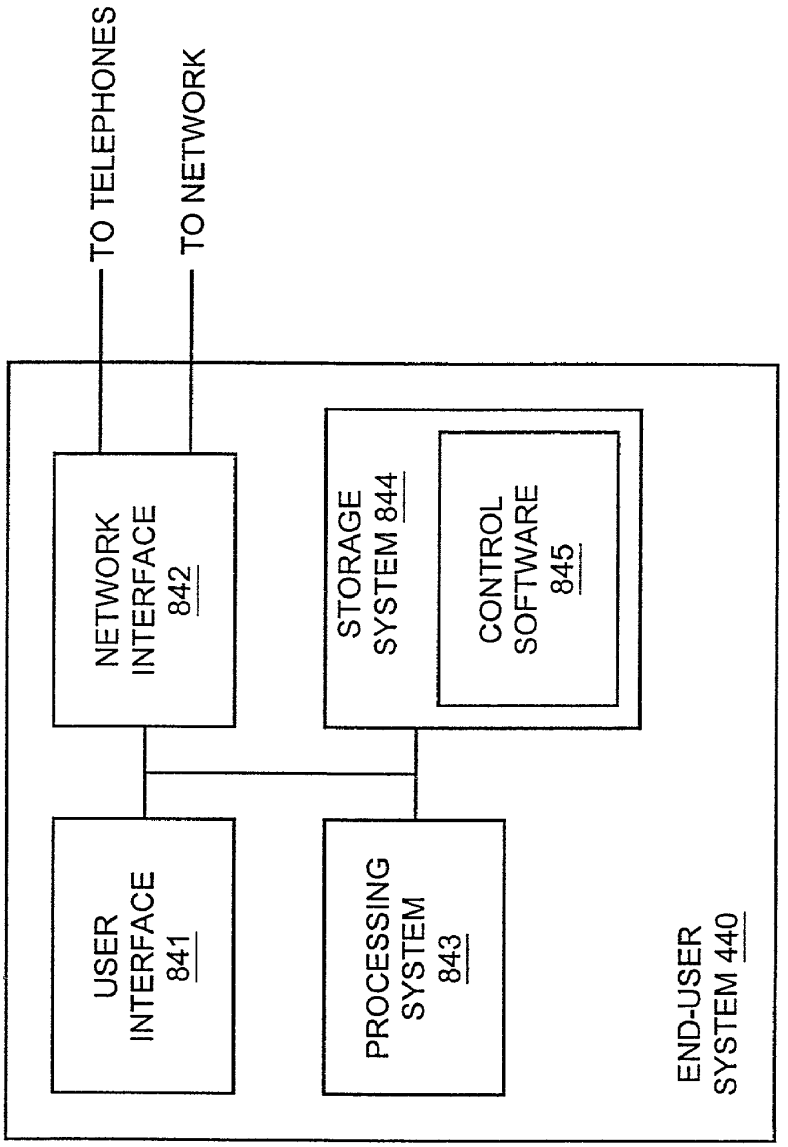
TO TELEPHONES
TO NETWORK
NETWORK INTERFACE 842
USER INTERFACE 841
STORAGE SYSTEM 844
CONTROL SOFTWARE 845
PROCESSING SYSTEM 843
END-USER SYSTEM 440

FIG. 8

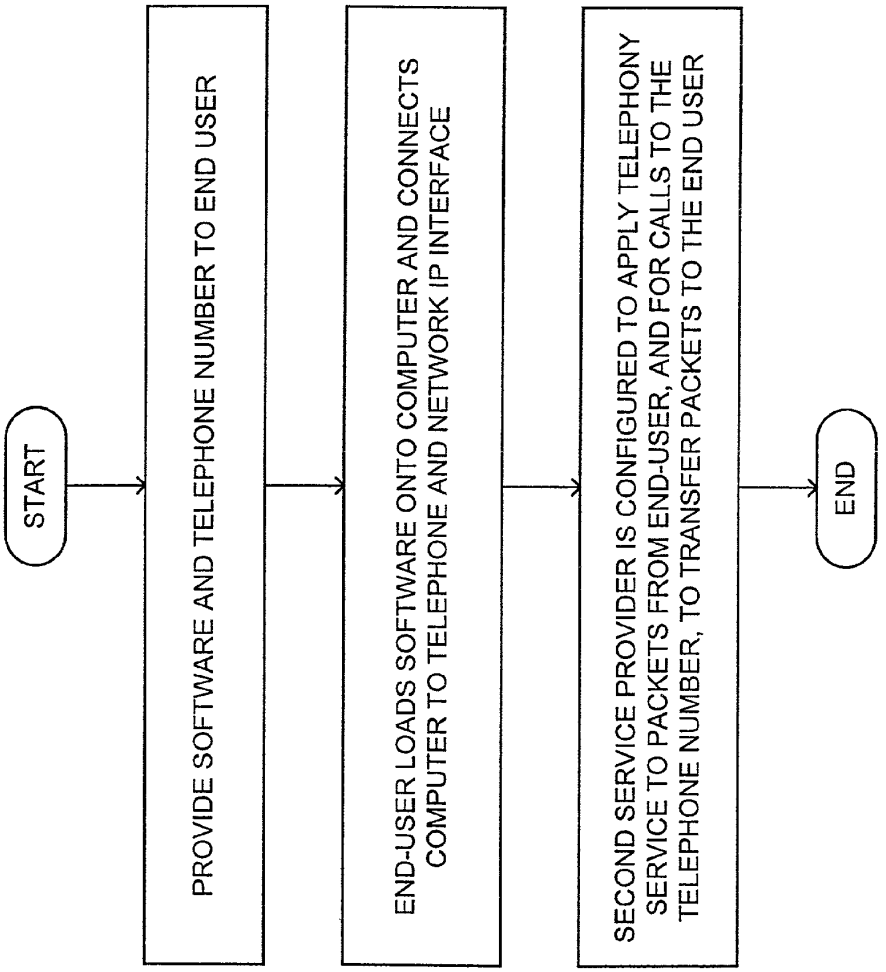
START
PROVIDE SOFTWARE AND TELEPHONE NUMBER TO END USER
END-USER LOADS SOFTWARE ONTO COMPUTER AND CONNECTS COMPUTER TO TELEPHONE AND NETWORK IP INTERFACE
SECOND SERVICE PROVIDER IS CONFIGURED TO APPLY TELEPHONY SERVICE TO PACKETS FROM END-USER, AND FOR CALLS TO THE TELEPHONE NUMBER, TO TRANSFER PACKETS TO THE END USER
END

FIG. 9

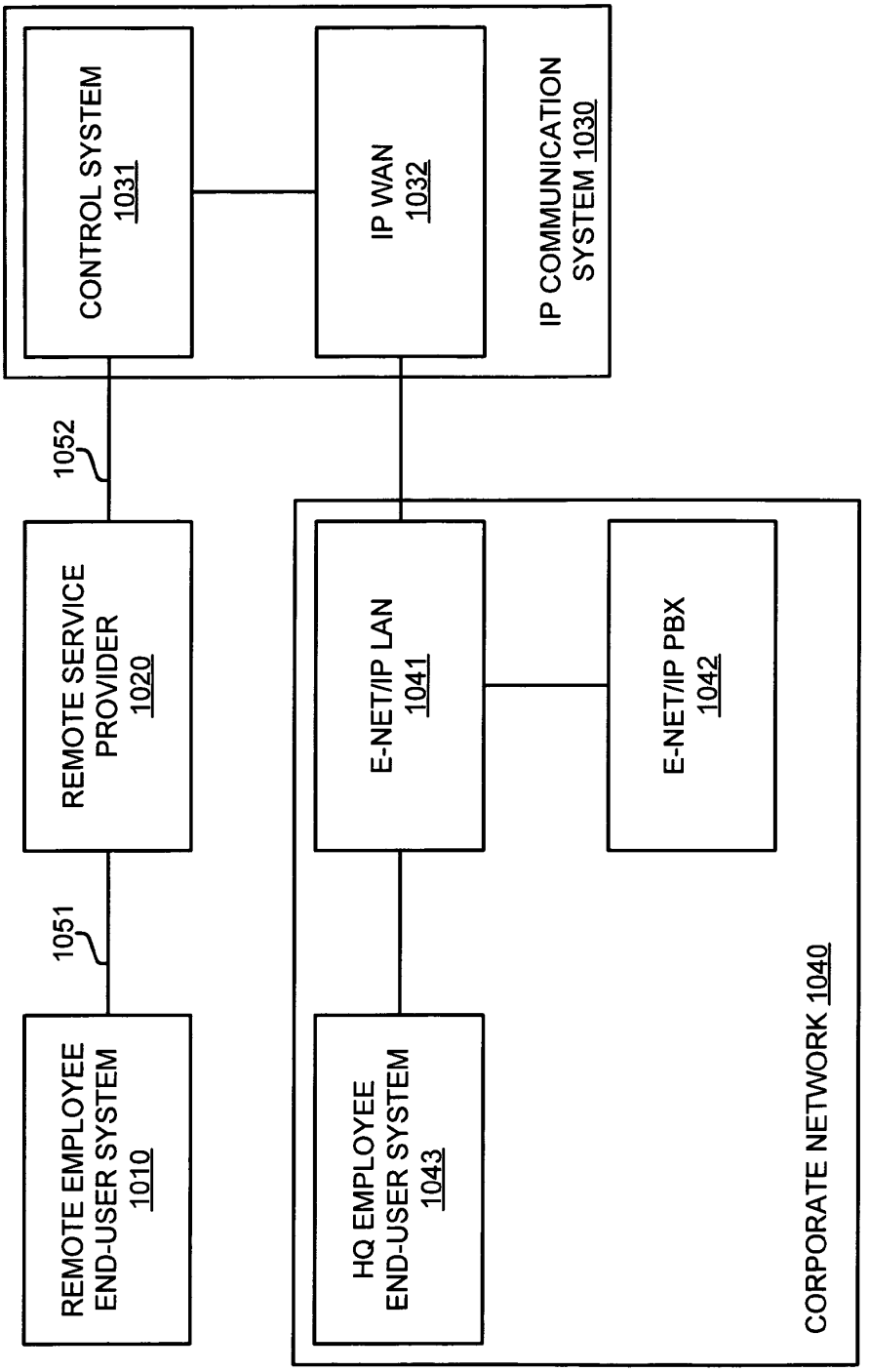
REMOTE EMPLOYEE END-USER SYSTEM 1010
1051
REMOTE SERVICE PROVIDER 1020
1052
CONTROL SYSTEM 1031
IP WAN 1032
IP COMMUNICATION SYSTEM 1030
HQ EMPLOYEE END-USER SYSTEM 1043
E-NET/IP LAN 1041
E-NET/IP PBX 1042
CORPORATE NETWORK 1040

FIG. 10

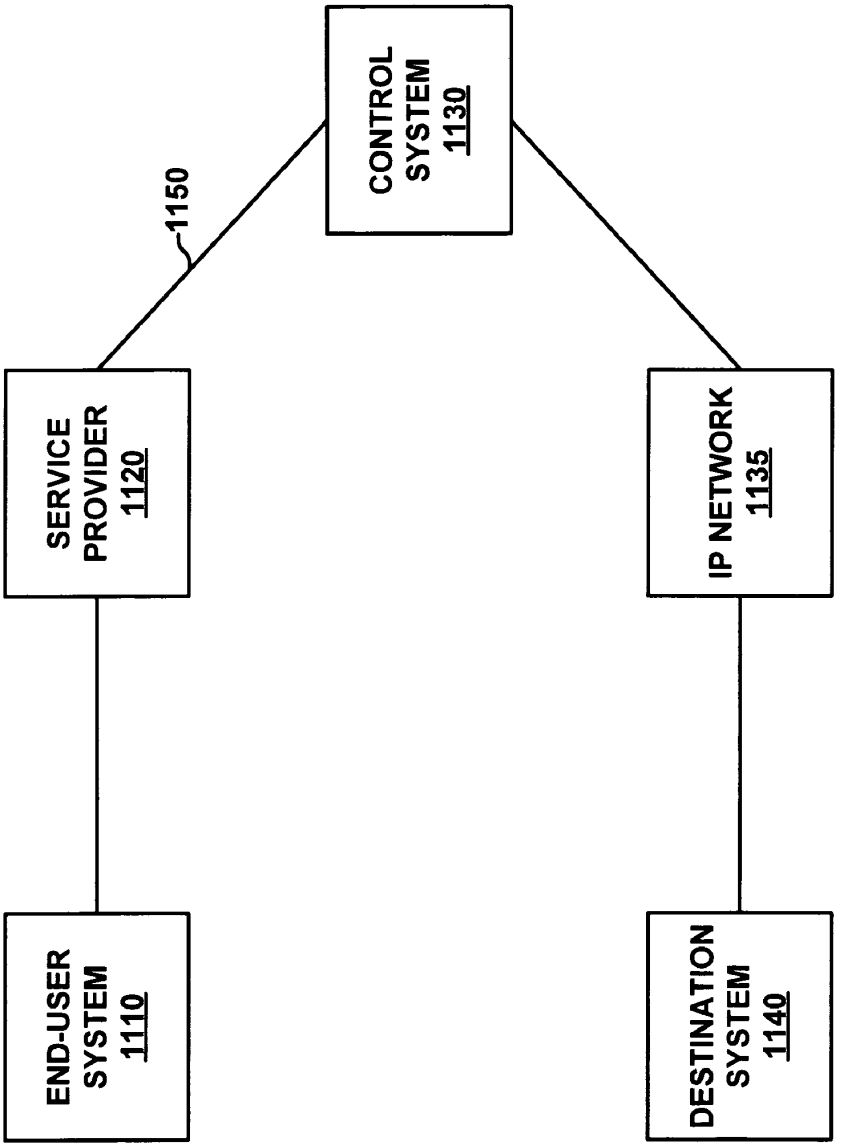
END-USER SYSTEM 1110
SERVICE PROVIDER 1120
1150
CONTROL SYSTEM 1130
IP NETWORK 1135
DESTINATION SYSTEM 1140

FIG. 11

ESTABLISHING END-USER COMMUNICATION SERVICES THAT USE PEER-TO-PEER INTERNET PROTOCOL CONNECTIONS BETWEEN SERVICE PROVIDERS

RELATED APPLICATIONS

Not applicable

FEDERALLY SPONSORED RESEARCH OR DEVELOPMENT

Not applicable

MICROFICHE APPENDIX

Not applicable

BACKGROUND OF THE INVENTION

1. Field of the Invention

The invention is related to the field of communications, and in particular, to the establishment of telephony service using peer-to-peer IP connections that extend the service reach of packet telephony networks.

2. Description of the Prior Art

Communication Service Provider Environment in the Prior Art

FIG. **1** illustrates a service provider environment in the prior art. End-user systems **130**, **140**, **150** are coupled to first service provider **110** over respective connections **131**, **141**, **151**. End-user systems **160**, **170**, **180** are coupled to second service provider **120** over respective connections **161**, **171**, **181**. First service provider **110** is coupled to public telephone network **100** and Internet **101** by respective connections **112** and **113**. Second service provider **120** is coupled to public telephone network **100** and Internet **101** by respective connections **121**, **122-123**. First service provider **110** is coupled to second service provider **120** over peer-to-peer Internet Protocol (IP) connection **111**.

FIG. **2** illustrates first service provider **110** in the prior art. First service provider **110** includes mux system **211**, router **212**, services network **213**, telephony gateway **214**, and internet gateway **215**. Mux system **211** is coupled to router **212** and to connections **131**, **141**, **151** from end-user systems **130**, **140**, **150**. Router **212** is coupled to services network **213**, telephony gateway **214**, and Internet gateway **215**. Router **212** is also coupled to peer-to-peer IP connection **111** to second service provider **120**. Telephony gateway **214** is coupled to connection **113** to public telephone network **100**. Internet gateway **215** is coupled to connection **112** to Internet **101**.

FIG. **3** illustrates second service provider **120** in the prior art. Second service provider **120** includes router **312** and packet telephony network **313**. Router **312** is coupled to peer-to-peer IP connection **111** to first service provider **110** and connection **123** to Internet **101**. Packet telephony network **313** is coupled to connections **161**, **171**, **181** to end-user systems **160**, **170**, **180**. Packet telephony network **313** is also coupled to connection **122** to Internet **101** and to connection **121** to public telephone network **100**.

Referring to FIGS. **1-3**, end-user systems **130**, **140**, **150** use first service provider **110** to access public telephone network **100** and Internet **101**. First service provider **110** provides telephony service through telephony gateway **214** and provides Internet access through Internet gateway **215**. First service provider **110** may also provide other services through services network **213**.

End-user systems **160**, **170**, **180** use second service provider **120** to access packet telephony network **313**. Packet telephony network **313** provides telephone services and Internet access over a packet network. End-user systems **160**, **170**, **180** include interface devices for use between their computers or telephones and packet telephony network **313**. Using end-user systems **160**, **170**, **180** and packet telephony network **313**, available telephony features include: 3-way calling, call forwarding, message waiting notification, ring-again, caller ID, voice-activated dialing, unified messaging, and unified communications.

Unfortunately, end-users of first service provider **110** do not have effective access to packet telephony network **313**. To access packet-based telephony, end-user systems **130**, **140**, **150** typically employ computer telephony over Internet **101**. Computer telephony requires two fairly sophisticated end-users who configure their computers to operate like telephones—including microphone, speaker, telephone circuitry, and user interface—and then operate their computers to exchange voice IP packets with one another over Internet **101**. For example, end-user systems **130**, **140** would exchange voice IP packets over first service provider **110** and Internet **101**. Computer telephony is much more complex than simply plugging-in a telephone and dialing a familiar number.

In contrast, end-users of second service provider **120** may plug standard telephones into their interface devices, and with relative ease, enjoy packet-based telephony service using a standard telephone. One example of a packet telephony network and associated end-user systems are the Integrated On-demand Network (ION) provided by Sprint Corporation.

Peer-to-Peer IP Connections in the Prior Art

Peer-to-peer IP connections are established between two different service providers to exchange IP traffic destined for the other service provider. It is important for a service provider to transfer this IP traffic as soon as possible to relieve other systems in that service provider from handling the traffic. For example, router **212** can transfer IP traffic to second service provider **120** over two different routes: 1) peer-to-peer IP connection **111**, or 2) Internet gateway **215** and Internet **101**. First service provider **110** wants to use peer-to-peer IP connection **111** whenever possible to reserve capacity through Internet gateway **215** for other IP traffic.

A brief discussion of IP addressing follows to further illustrate peer-to-peer IP connections. An Internet address is currently a 32-bit number that is comprised of four 8-bit blocks that are separated by decimals. It is expected that this addressing scheme will be expanded to a 128-bit number that is separated into four 32-bit blocks. An Internet address is also separated into a network part and a host part. The network part identifies the destination network, and the host part identifies the destination host on the destination network. Internet addresses are separated into classes based on how many bits are used for the network part and how many bits are used for the host part. Class "A" addresses use the first block for the network part and the final three blocks for the host part. Class "B" addresses use the first two blocks for the network part and the final two blocks for the host part. Class "C" addresses use the first three blocks for the network part and the final block for the host part.

Class A addresses are typically not used because the first block in an Internet address typically carries "www" for the world wide web, and the subnet on the web must be identified in the second and/or third blocks. Class B addresses are rare

because if the first block identifies "www", then only eight bits remain to provide a mere 256 Class B addresses on the web.

Internet backbone providers carry large amounts of Internet traffic and typically host the largest and most popular websites. The rare Class B addresses are often used by Internet backbone providers to collect IP traffic for their portion of the backbone, and consequently, these Class B addresses are used by other service providers to quickly identify and dump IP traffic over peer-to-peer connections to the Internet backbone provider. In the above example, second service provider **120** could be an Internet backbone provider with Class B addresses. Thus, when router **212** receives Internet traffic with these class B addresses from end-user systems **130**, **140**, **150**, router **212** transfers this IP traffic over peer-to-peer connection **111** to second service provider **120**. This routing is far more efficient than transferring the IP traffic through Internet Gateway **215** and over Internet **101** to second service provider **120**.

Problems in the Prior Art

The above networking arrangement creates a serious problem for end-users. The service provider who owns the connection to the end-user has a near monopoly over local services for that end-user. Exorbitant costs prevent other service providers from deploying their own end-user connections in competition with existing service providers. The deregulation that was supposed to usher in local competition has yet to deliver a meaningful level of competition in some areas.

Most service providers do not offer any packet-based telephony services that have a legitimate Quality of Service (QoS). End-users are left with a few undesirable choices: order multiple phone lines, order an expensive T1 connection, or employ computer telephony over the Internet. End-users in remote areas may not even have all of these choices.

Unfortunately, computer telephony requires a computer as opposed to a telephone. The computer must be configured with a telephony user interface, including microphone, speaker, and computer telephony software. Computer telephony still requires a relatively sophisticated end-user.

The use of the Internet for computer telephony compounds the problem. The Internet offers only best effort delivery without any guaranteed QoS. The Internet may require 15 hops to reach a destination adding unacceptable delay to voice communications. The Internet offers little security and allows hackers to listen to unsophisticated users. Computer telephony over the Internet does not offer the robust features that some end-users desire, such as voice mail, operator assistance, and call forwarding.

SUMMARY OF THE INVENTION

The invention helps solve the above problems with technology that allows an end-user who is connected to a first service provider to obtain packet-based telephony services from a second service provider, even though the end-user is not directly connected to the second service provider. To access the packet-based telephony services of the second service provider, the end-user system uses an IP tunnel through both the first service provider and a peer-to-peer IP connection between the first and second service providers. Advantageously, the end-user may choose packet-based services from many service providers with peer-to-peer IP connections to the first service provider. This dramatically expands end-user choice and stimulates meaningful competition at the service level. The technology offers numerous other advantages.

The second service provider may implement the technology with few or no changes to their packet telephony network, so the system may be quickly and cheaply deployed. For a service provider with many existing peer-to-peer IP connections, the technology greatly expands potential service coverage areas—even to end-users in remote areas. The end-user obtains true QoS on packet-based telephony, and they may obtain many of the features that currently enjoy with conventional telephone services, such as voice mail and call forwarding. Because the technology restricts or eliminates use of the Internet, issues like communication delay and security are dramatically improved.

Some examples of the invention include methods of establishing telephony service for an end-user. These methods comprise providing the end-user with a telephone number and software or a communication device, and configuring a second service provider to provide packet-based telephony service to the end-user over a peer-to-peer IP connection to a first service provider.

In some examples of the invention, the software is loaded onto to a computer that is connected to a telephone and to an Internet Protocol (IP) interface to a first service provider. The software directs the computer to interwork between telephony signals for the telephone and IP packets for the IP interface. The software directs the computer to include a first IP address and packet telephony network addresses in network-bound ones of the IP packets. The first IP address is used by the first service provider to route the network-bound IP packets over a peer-to-peer IP connection to a second service provider. The packet telephony network addresses are used by the second service provider to provide the telephony service.

In some examples of the invention, the end-user communication device interworks between telephony signals for the telephone and IP packets for the IP interface. The communication device includes a first IP address and packet telephony network addresses in network-bound ones of the IP packets. The first IP address is used by the first service provider to route the network-bound IP packets over a peer-to-peer IP connection to the second service provider. The packet telephony network addresses are used by the second service provider to provide the telephony service.

In some examples of the invention, configuring the second service provider to provide the packet-based telephony service comprises configuring the second service provider to route packets directed toward the end-user to the peer-to-peer IP connection to the first service provider.

In some examples of the invention, configuring the second service provider to provide the packet-based telephony service comprises configuring the second service provider, for IP packets from the end-user, to replace the first IP address with the packet telephony network addresses.

In some examples of the invention, the software directs the computer to encapsulate ATM cells having the packet telephony network addresses in the network-bound IP packets, and further comprising configuring the second service provider to route the ATM cells to provide the packet-based telephony service.

In some examples of the invention, the first IP address comprises a Class B address for the second service provider.

In some examples of the invention, the first IP address comprises a Class B address for the packet-based telephony service in the second service provider.

In some examples of the invention, providing the software to the end-user comprises providing the software to the end-user through a world wide web site.

In some examples of the invention, providing the telephone number to the end-user comprises providing the telephone number to the end-user through a world wide web site.

In some examples of the invention, receiving an end-user registration from the end-user through a world wide web site.

In some examples of the invention, receiving a telephony service payment plan selection from the end-user through a world wide web site.

BRIEF DESCRIPTION OF THE DRAWINGS

The same reference number represents the same element on all drawings.

FIG. **1** illustrates a communication service provider environment in the prior art.

FIG. **2** illustrates a first service provider in the prior art.

FIG. **3** illustrates a second service provider in the prior art.

FIG. **4** illustrates a communication service provider environment in an example of the invention.

FIG. **5** illustrates a second service provider in an example of the invention.

FIG. **6** illustrates a service portal in an example of the invention.

FIG. **7** illustrates an end-user system in an example of the invention.

FIG. **8** illustrates an end-user system in an example of the invention.

FIG. **9** illustrates a method for establishing telephony service for an end-user in an example of the invention.

FIG. **10** illustrates a service example for a remote employee.

FIG. **11** illustrates another service example.

DETAILED DESCRIPTION OF THE PREFERRED EMBODIMENT

FIGS. **4-9** and the following description depict specific examples to teach those skilled in the art how to make and use the best mode of the invention. For the purpose of teaching inventive principles, some conventional aspects have been simplified or omitted. Those skilled in the art will appreciate variations from these examples that fall within the scope of the invention. Those skilled in the art will appreciate that the features described below can be combined in various ways to form multiple variations of the invention. As a result, the invention is not limited to the specific examples described below, but only by the claims and their equivalents.

Communication Service Provider Environment—FIGS. **4-6**

FIG. **4** illustrates a service provider environment in the prior art. End-user systems **430**, **440**, **450** are coupled to first service provider **410** over respective connections **431**, **441**, **451**. End-user systems **460**, **470**, **480** are coupled to second service provider **420** over respective connections **461**, **471**, **481**. First service provider **410** is coupled to public telephone network **400** and Internet **401** by respective connections **412** and **413**. Second service provider **420** is coupled to public telephone network **400** and Internet **401** by respective connections **421**, **422-423**. First service provider **410** is coupled to second service provider **420** over peer-to-peer IP connection **411**.

In the context of the invention, a "service provider" means a corporate entity that offers communication services to end-users. Different corporate entities that do not exert majority-ownership over one another comprise "different service providers". For example, AT&T, WorldCom, Sprint, British Telecom, NT&T, Verizon, SBC, Qwest, and Bell South are current examples of different service providers. In the context of the invention, a "peer-to-peer IP connection" means an IP connection between different service providers that is established by mutual agreement for the exchange of IP traffic.

If desired, the following elements could be the same as in the prior art—although modifications may still be made without deviating from the invention: first service provider **410**, public telephone network **400**, Internet **401**, end-user systems **460**, **470**, **480**, and connections **411-413**, **421-423**, **431**, **441**, **451**, **461**, **471**, **481**.

End-user systems **430**, **440**, **450** could be stand-alone enclosures with internal circuitry, software, and interfaces; computers having network and telephony interfaces and running specialized software; communications devices, such as telephones and personal digital assistants, with embedded functionality; or some other properly configured device or system. Connections **431**, **441**, **451** could be twisted pair wires, coaxial cable, optical fiber, wireless link, or some other type of communication connection. Connections **431**, **441**, **451** may utilize Digital Subscriber Line (DSL), spread spectrum, Ethernet, Internet Protocol (IP), Asynchronous Transfer Mode (ATM), or some other protocol. It should be understood that interface components, such as modems and transceivers, could either be a part of end-user systems **430**, **440**, **450**, or a part of connections **431**, **441**, **451**.

FIG. **5** illustrates second service provider **420** in the prior art. Second service provider **420** includes router **512**, packet telephony network **513**, and service portal **514**. Router **512** is coupled to peer-to-peer IP connection **411** to first service provider **410**. Router **512** is coupled to IP backbone connection **423** to Internet **401**. Router is coupled to service connection **515** to service portal **514**. Packet telephony network **513** is coupled to connections **461**, **471**, **481** to end-user systems **460**, **470**, **480**. Packet telephony network **513** is coupled to IP connection **422** to Internet **401**. Packet telephony network **513** is coupled to telephony connection **421** to public telephone network **400**. Packet telephony network **513** is coupled to service connection **516** to service portal **514**.

If desired, all elements in second service provider **420**, except for service portal **514** and service connections **515-516**, could be the same as in the prior art—although modifications may still be made without deviating from the invention. In some examples of the invention, service connection **515** is an IP connection, and service connection **516** is an ATM connection, but service connections **515-516** could use other protocols.

Referring to FIGS. **4-5**, end-user systems **430**, **440**, **450** and service portal **514** exchange a first set of IP packets that carry telephony voice and signaling by placing a first set of IP addresses in these IP packets. First service provider **410** routes the first set of IP packets between end-user connections **431**, **441**, **451** and peer-to-peer IP connection **411** based on the first set of IP addresses. Router **512** routes the first set of IP packets between peer-to-peer IP connection **411** and service connection **515** based on the first set of IP addresses. For packet transfers from end-user systems **430**, **440**, **450** to service portal **514**, these IP addresses could be Class B IP addresses for second service provider **420** that identify packet telephony network **513**. For packet transfers from service portal **514** to end-user systems **430**, **440**, **450**, these IP addresses could be end-user IP addresses. Thus, Point-to-Point Protocol Internet over Ethernet (PPPOE) tunnels may be established between end-user devices **430**, **440**, **450** and service portal **514** using proper IP addressing, such as a class B address for second service provider **420** and the IP

addresses for the end-users. Advantageously, the first set of IP packets is not routed over Internet **401**, and as a result, security and service control is dramatically improved. Using end-user systems **430**, **440**, **450** and packet telephony network **513**, available telephony features include: 3-way calling, call forwarding, message waiting notification, ring-again, caller ID, voice-activated dialing, unified messaging, and unified communications.

End-user systems **430**, **440**, **450** and Internet **401** may exchange a second set of IP packets by placing a second set of IP addresses in these IP packets. First service provider **410** routes the second set of IP packets between end-user connections **431**, **441**, **451** and peer-to-peer IP connection **411** based on the second set of IP addresses. Router **512** routes the second set of IP packets between peer-to-peer IP connection **411** and Internet backbone IP connection **423** based on the second set of IP addresses. For packet transfers from end-user systems **430**, **440**, **450** to Internet **401**, these IP addresses could be Class B IP addresses for second service provider **420** that identify Internet **401**. For packet transfers from Internet **401** to end-user systems **430**, **440**, **450**, the second set of IP addresses could be the same end-user IP addresses as in the first set.

FIG. **6** illustrates service portal **514** in an example of the invention. Service portal **514** includes IP interface **650**, interworking unit **651**, and service interface **652**. IP interface **650** is coupled to service connection **515** and interworking unit **651**. Service interface **652** is coupled to interworking unit **651** and service connection **516**.

IP interface **650** exchanges the first set of IP packets between service connection **515** and interworking unit **651**. Interworking unit **651** provides protocol conversion between the first set of IP packets and a first set of service packets. Protocol conversion may comprise replacing the IP address with an address suitable for packet telephony network **513**. Service interface **652** exchanges the first set of service packets between interworking unit **651** and service connection **516**.

Packet telephony network **513** is configured to route service packets between network ports to provide telephony service through the network ports. Service connection **516** is coupled to a first set of these network ports. Thus, packet telephony network **513** provides telephony service to end-user systems **430**, **440**, **450** through the first set of network ports.

Advantageously, service portal **514** is designed to minimize or eliminate changes to first service provider **410** and second service provider **420**. First service provider **410** exchanges IP packets between connections **411**, **431**, **441**, **451** as in the prior art. Router **512** exchanges IP packets with service portal **514** as it does with Internet **401**. Packet telephony network **513** exchanges service packets with service portal **514** as it would with network ports for connections **461**, **471**, **481**. Based on this disclosure, those skilled in the art will appreciate how to modify existing products, such as Redback equipment, to make and use service portal **514**.

End-user systems **430**, **440**, **450** place addresses for packet telephony network **513** in the body of the first set of IP packets transferred to service portal **514**. To perform protocol conversion on these IP packets, service portal **514** replaces the first set of IP addresses with the packet telephony network addresses in the body of the IP packets. For IP packets transferred to end-user systems **430**, **440**, **450**, interworking unit **513** may maintain and use a list of dynamically-assigned end-user IP addresses.

In some examples of the invention, the service packets comprise ATM cells and packet telephony network **513** is configured to route the ATM cells between the network ports to provide telephony service with a guaranteed Quality-of-Service. In these examples of the invention, the first set of IP packets may encapsulate the ATM cells, so service portal may strip off the IP wrapper and transfer the de-encapsulated ATM cells to service connection **516**. Service portal **514** may use various technologies such as Media Gateway Control Protocol (MGCP), Simple Gateway Control Protocol (SGCP), Simple Internet Protocol (SIP), IP, ATM, IPSEC, and IEEE 802.1P and 1Q.

Consider an example where end-user system **430** makes a packet telephony call to end-user system **480**. To establish the call connection, end-user system **430** will send signaling to packet telephony network **513**. End-user system **430** addresses the signaling to a service node in packet telephony network **513** and encapsulates the signaling in an IP wrapper with a first set IP address. Based on the first set IP address, first and second service providers **410**, **420** route the signaling to service portal **514**. Service portal **514** replaces the first set IP address with the service node address and forwards the signaling to packet telephony network **513**. Packet telephony network **513** routes the signaling to the service node. The service node notifies end-user system **480** of the incoming call and establishes call connections through packet telephony network **513**.

For voice packets from end-user system **430** to end-user system **480**, end-user system **430** addresses the voice packets to end-user system **480** and encapsulates the voice packets in an IP wrapper with a first set IP address. Based on the first set IP address, first and second service providers **410**, **420** route the voice packets to service portal **514**. Service portal **514** replaces the first set IP address with the end-user **480** address and forwards the voice packets to packet telephony network **513**. Packet telephony network **513** routes the voice packets to end-user **480**.

For voice packets from end-user system **480** to end-user system **430**, end-user system **480** addresses the voice packets to end-user system **430**. Based on the end-user system **430** address, packet telephony network **513** routes the voice packets to service portal **514**. Service portal **514** and first service provider **410** route these voice packets to end-user **430** based on the end-user **430** address. In some cases, service portal **514** may encapsulate ATM voice cells addressed to end-user **430** in an IP wrapper with and end-user **430** IP address.

End-User Systems—FIGS. **7-8**

FIG. **7** illustrates end-user system **430** in an example of the invention. End-user system **430** includes telephony interface **731**, control circuitry **732**, and network interface **733**. Control circuitry includes bearer circuitry **734** and signaling circuitry **735**. Telephony interface **731** and network interface **733** are both coupled to bearer circuitry **734** and signaling circuitry **735**.

Telephony interface **731** exchanges telephony signals with a telephone connection to telephones. For conventional analog telephones, these signals include: power, dial tone, digit tones, ring current, ringback, slow and fast busy, caller ID, and message waiting. In some cases, end-user system **430** may be integrated into a telephone. In these cases the telephony signals from telephony interface **731** would drive the telephone to process or generate the telephony signals described above.

Network interface **733** exchanges IP packets with a network IP interface for connection **431**, and the special addressing required for these packets is discussed below. A modem may be included within network interface **733** or as a part of connection **430**. Typically, the end-user may have an existing modem that can be used, so network interface **733** could be

configured to link in to the existing modem, or it could be configured with a modem of its own.

Control circuitry **732** provides the interface between telephony interface **731** and network interface **733**. Bearer circuitry **734** processes voice signals, and signaling circuitry **735** processes the telephony signaling required to set-up and tear down telephone calls. Control circuitry **732** manages services including voice telephony, video/audio file transfer, subnet bandwidth management, packet admission control, packet prioritization, packet QoS, and packet security. Control circuitry **732** may use various technologies such as MGCP, SGCP, SIP, IP, ATM, IPSEC, Resource Reservation Set-up Protocol (RSVP), Diffsery Protocol, Subnetwork Bandwidth Management (SBM), and IEEE 802.1P and 1Q. Through packet telephony network **513** and end-user system **430**, available telephony features include: 3-way calling, call forwarding, message waiting notification, ring-again, caller ID, voice-activated dialing, unified messaging, and unified communications. Based on this disclosure, those skilled in the art will appreciate how to modify existing end-user equipment, such as end-user systems **160**, **170**, **180**, to make and use end-user system **430**.

End-user system **430** must be configured to properly address IP packets to ensure delivery to service portal **514** over peer-to-peer IP connection **411**. Consider a first set of IP packets directed to packet telephony network **513** from end-user system **430**. Control circuitry **732** places both a first IP address and packet telephony network addresses in the first set of the IP packets. Using the first IP address, first service provider **410** routes the first set of IP packets over peer-to-peer IP connection **411** to second service provider **420**, and second service provider **420** routes the first set of the IP packets to service portal **514**. Service portal **514** replaces the first IP address with the packet telephony network addresses and forwards these packets to packet telephony network **513**. Packet telephony network **513** provides telephony services to the first set of packets based on the network addresses.

In some examples, control circuitry **732** generates ATM cells with network addresses that are suitable for packet telephony network **513**. These ATM cells may themselves encapsulate IP packets that use MGCP and IPSEC. The ATM cells are then encapsulated in IP packets that have the Class B IP address for service portal **514**. Service portal **514** merely strips off the external IP wrapper and provides the ATM cells to packet telephony network **513**. Thus, service portal **514** appears to packet telephony network **514** as a group of end-users (i.e. **460**, **470**, **480**).

For packet transfers from service portal **514** to end-user systems **430**, **440**, **450**, service portal **514** uses end-user IP addresses that may be dynamically assigned and tracked. End-user system **430** may handle these packets in the normal fashion or may strip off the IP wrapper to process an encapsulated ATM cell.

End-user system **430** could comprise a single stand-alone enclosure. End-user system **430** could be integrated into a telephone. End-user system **430** could use a microprocessor in a personal computer for control circuitry **732** with telephony interface **731** and network interface **733** located on a computer card.

FIG. **8** illustrates end-user system **440** in an example of the invention. End-user system **440** includes user interface **841**, network interface **842**, processing system **843**, and storage system **844**. Storage system **844** stores control software **845**. Processing system **843** is linked to user interface **841**, network interface **842**, and storage system **843**.

End-user system **440** could be comprised of a programmed general-purpose computer, although those skilled in the art will appreciate that programmable or special purpose circuitry and equipment may be used. End-user system **440** may use a client server architecture where operations are distributed among a server system and client devices that together comprises elements **841**-**845**.

User interface **841** could comprise a microphone, speaker, keyboard, mouse, voice recognition interface, graphical display, touchscreen, or some other type of user device. Network interface **842** could comprise a network interface card or some other communication device. Network interface **842** may be distributed among multiple communication devices. Network interface **842** may have a modem and telephone jacks to respectively interface with connection **441** and analog telephones.

Processing system **843** could comprise a computer microprocessor, logic circuit, or some other processing device. Processing system **843** may be distributed among multiple processing devices. Storage system **844** could comprise a disk, tape, integrated circuit, server, or some other memory device. Storage system **844** may be distributed among multiple memory devices.

Processing system **843** retrieves and executes control software **845** from storage system **844**. Control software **845** could comprise an application program, firmware, or some other form of machine-readable processing instructions. When executed by processing system **843**, control software **845** directs processing system **843** to operate in accord with the invention.

Processing system **843** controls the telephone jacks to exchange telephony signals with a telephone connection to the telephones. For conventional analog telephones, these signals include: power, dial tone, digit tones, ring current, ringback, slow and fast busy, caller ID, and message waiting. Processing system **843** may also control user interface components, such as display, microphone, and speaker, to provide telephony service through user interface **841**. Processing system **843** controls the modem to exchange IP packets with connection **441**.

Processing system **843** processes voice signals and telephony signaling. Processing system **843** manages services including voice telephony, video and audio file transfer, subnet bandwidth management, packet admission control, packet prioritization, packet QoS, and packet security. Processing system **843** may use various technologies such as MGCP, SGCP, SIP, IP, ATM, IPSEC, Resource Reservation Set-up Protocol (RSVP), Diffsery Protocol, Subnetwork Bandwidth Management (SBM), and IEEE 802.1P and 1Q. Through packet telephony network **513** and end-user system **440**, available telephony features include: 3-way calling, call forwarding, message waiting notification, ring-again, caller ID, voice-activated dialing, unified messaging, and unified communications. Based on this disclosure, those skilled in the art will appreciate how to configure existing computers to make and use end-user system **440**.

Processing system **843** must be configured to properly address IP packets to ensure delivery to service portal **514** over peer-to-peer IP connection **411**. For a first set of IP packets directed to packet telephony network **513** from end-user system **440**, processing system **843** places both a first IP address and packet telephony network addresses in the first set of the IP packets. Using the first IP address, first service provider **410** routes the first set of IP packets over peer-to-peer IP connection **411** to second service provider **420**, and second service provider **420** routes the first set of the IP packets to service portal **514**. Service portal **514** replaces the first IP address with the packet telephony network addresses and forwards these packets to packet telephony network **513**.

Packet telephony network **513** provides telephony services to the first set of packets based on the network addresses.

In some examples, processing system **843** generates ATM cells with network addresses that are suitable for packet telephony network **513**. These ATM cells may themselves encapsulate IP packets that use MGCP and IPSEC. The ATM cells are then encapsulated in IP packets that have the Class B IP address for service portal **514**. Service portal **514** merely strips off the external IP wrapper and provides the ATM cells to packet telephony network **513**. Thus, service portal **514** appears to packet telephony network **514** as a group of end-users (i.e. **460**, **470**, **480**).

For packet transfers from service portal **514** to end-user systems **430**, **440**, **450**, service portal **514** uses end-user IP addresses that may be dynamically assigned and tracked. Processing system **843** may handle these packets in the normal fashion or may strip off the IP wrapper to process an encapsulated ATM cell.

Telephony Service Ordering—FIG. **9**

FIG. **9** illustrates a method for establishing telephony service for an end-user. The end-user is provided with software and a telephone number. The software and telephone number may be provided to the end-user user through a world wide web site. The web site may also be used to receive from the end-user an end-user software registration, a grade-of-service selection, and a telephony service payment plan selection. For example, the user may register their software to receive technical support. The end-user may select a grade-of-service suitable for a home-office. The end-user may select a monthly flat rate payment plan that is billed to an office address.

The end-user loads the software onto to a computer and connects the computer to a telephone and to an Internet Protocol (IP) interface to a first service provider. If the software is downloaded from the web, loading in essentially automatic. This software is configured to direct the computer to operate as described above with respect to FIG. **8**.

The second service provider is configured to provide packet-based telephony service to the end-user. The packet telephony system is configured to route packets directed toward the end-user to the service portal. For IP packets from the end-user, the service portal is configured to replace the first set IP address with the packet telephony network addresses. For IP packets to the end-user, the service portal is configured to track and use dynamically-assigned end-user IP addresses. For telephone calls to the telephone number, the packet telephony network is configured to establish call connections to the service portal for packet delivery to the end-user over the peer-to-peer IP connection.

In a variation to the above method, the end-user obtains a communication device from a retail establishment. The end-user accesses a web site to receive their telephone number, register their device, select a grade-of-service, and select a telephony service payment plan. The end-user connects the communication device to a telephone and to an IP interface to a first service provider. The communication device is configured to operate as described above with respect to FIG. **7**. The second service provider is configured to provide packet-based telephony service to the end-user as described above.

Communication Service Examples—FIGS. **10-11**

FIG. **10** illustrates a service example for a remote employee. Consider a situation where an employee has a home office that is distant from their corporate headquarters. The invention is readily applicable to this situation. FIG. **10** shows remote employee user system **1010**, remote employee service provider **1020**, IP communication system **1030**, and corporate network **1040**. IP communication system **1030** includes control system **1031** and IP Wide Area Network (WAN) **1032**. Corporate network **1040** includes Ethernet/IP Local Area Network (LAN) **1041**, IP PBX **1042**, and HQ employee user system **1043**. Remote employee end-user system **1010** could be similar to one of the end-user systems described above. Control system **1031** could be similar to the service portal described above.

Remote employee user system **1010** and remote service provider **1020** exchange Ethernet/IP packets over Ethernet/IP connection **1051**. Remote service provider **1020** and control system **1031** exchange Ethernet/IP packets over peer-to-peer Ethernet/IP connection **1052**. Thus, a first Ethernet/IP system is comprised of end-user system **1010**, connections **1051-1052**, and control system **1031**. IP WAN **1032** exchanges IP packets with both control system **1031** and Ethernet/IP LAN **1041**. Ethernet/IP LAN **1041** exchanges Ethernet/IP packets with both Ethernet/IP PBX **1042** and HQ employee user system **1043**. Thus, a second Ethernet/IP system is comprised of end-user system **1043**, Ethernet/IP PBX **1042**, and Ethernet/IP LAN **1041**.

Remote employee user system **1010** and control system **1031** use proxy addressing to communicate with one another over an IP tunnel through IP connections **1051-1052** and service provider **1020**. User system **1010** and control system **1031** use Subnetwork Bandwidth Manager (SBM) to provide admission control in the first Ethernet/IP system. User system **1010** and control system **1031** use IEEE 802.1P/1Q to provide packet prioritization and queuing in the first Ethernet/IP system. Virtual Local Area Networks (V-LANs) may be established in the first Ethernet/IP system to provide service differentiation for services, such as voice over IP, multimedia collaboration, video streaming, and file transfers. In the second Ethernet/IP system, user system **1043** and LAN **1041** use SBM to provide admission control and use IEEE 802.1P/1Q to provide packet prioritization and queuing. V-LANs may be established to provide service differentiation. One example of a product that could be used to implement at least some of these technologies is XP from Microsoft.

Systems **1010**, **1030**, and **1040** use Resource Reservation Set-up Protocol (RSVP) and Diffsery to manage end-to-end quality-of-service. RSVP is implemented in the first and second Ethernet/IP systems, and Diffsery is implemented in IP WAN **1032**, so RSVP/Diffsery interfaces are utilized at WAN **1032** boundaries. IP WAN **1032** also implements admission control at its borders.

To implement communication service, the remote employee obtains IP service from service provider **1020**. The end user also receives an end-user system **1010** IP address that remote service provider **1020** associates with end-user system **1010**.

End-user systems **1010** and **1043** use Session Initiation Protocol (SIP) to set-up connections with one another through Ethernet/IP PBX **1042**. On a voice call from the remote employee to the corporate HQ employee, end-user system **1010** generates a SIP message that is addressed to PBX **1042** and that includes the end-user system **1043** SIP address as the call destination. Once the SIP message is generated, end-user system **1010** embeds the PBX **1042** address in the body of the message and places the proxy address for control system **1031** in the header of the SIP message. User system **1010** transfers the SIP message to connection **1051**. Based on the proxy IP address in the header, remote service provider **1020** routes the SIP message to peer-to-peer IP connection **1052**.

Control system **1031** receives the SIP message with the proxy address in the header. Control system **1031** replaces the proxy address with the PBX **1042** SIP address embedded in the message. Control system **131** transfers this SIP message

to IP WAN **1032**. IP WAN **1032** transfers the SIP message to Ethernet/IP LAN **1041** for delivery to Ethernet/IP PBX **1042** based on the SIP address that is now in the header. PBX **1042** processes the SIP message to establish a voice session between user systems **1010** and **1043**.

On a voice call from the corporate HQ employee to the remote employee, end-user system **1043** generates a SIP message that is addressed to Ethernet/IP PBX **1042** and that includes the end-user system **1010** SIP address as the call destination. Ethernet/IP LAN **1041** transfers the SIP message to Ethernet/IP PBX **1042**. Ethernet/IP PBX **1042** processes the SIP message to establish a voice session between user systems **1010** and **1043**.

To transfer a SIP message to end-user system **1010**, Ethernet/IP PBX **1042** places the SIP address of end user system **1010** in the header. Ethernet/IP LAN **1041** and IP WAN **1032** transfer the SIP message to control system **1031** based on the end-user system **1010** SIP address. Control system **1031** replaces the SIP address with the end-user system **1010** IP address used by service provider **1020** and embeds the SIP address in the message. Control system **131** transfers the SIP message to peer-to-peer IP connection **1052**. Remote service provider **1020** receives and routes the SIP message to end-user system **1010** over connection **1051** based on the end-user system **1010** IP address. End-user system **1010** replaces the end-user system **1010** IP address used by service provider **1020** with the SIP address and processes the SIP message in the normal manner.

For the transfer of voice packets from end-user system **1010** to end-user system **1043**, end-user system **1010** embeds the end-user **1043** SIP address in the voice packets and places the proxy address of control system **1031** in the header. Control system **1031** replaces the proxy address with the end-user system **1043** SIP address. Control system **131** transfers the voice packets to IP WAN **1032**. IP WAN **1032** transfers the voice packets to Ethernet/IP LAN **1041** for delivery to end-user system **1043** based on the SIP address now in the header.

For the transfer of voice packets from end-user system **1043** to end-user system **1010**, end-user system **1043** places the SIP address of end user **1010** in the header. Ethernet/IP LAN **1041** and IP WAN **1032** transfer the voice packets to control system **1031** based on the SIP address. Control system **1031** replaces the SIP address with the end-user system **1010** IP address and embeds the SIP address in the voice packets. Control system **131** transfers the voice packets to peer-to-peer IP connection **1052**. Remote service provider **1020** routes the voice packets to end-user system **1010** over connection **1051** based on the end-user **1010** IP address. End-user system **1010** replaces the end-user system **1010** IP address with the SIP address and processes the voice packets in the normal manner.

FIG. **11** illustrates another service example. The elements of FIG. **11** could be similar to like elements described above. End-user system **1110** is coupled to service provider **1120**. Service provider is coupled to control system **1130** over peer-to-peer IP connection **1150**. Control system **1130** is coupled to IP network **1135**. IP network **1135** is coupled to destination system **1140**. Service provider **1120** associates end-user system with a first end-user IP address and associates control system **1130** with a proxy IP address. Destination system **1140** associates end-user system **1110** with a second end-user IP address.

End-user system **1110** transfers a first set of IP packets to service provider **1120**. These first IP packets are addressed to the proxy IP address for control system **1130** and include an embedded destination IP address for destination system **1140**. Service provider **1120** transfers the first IP packets to peer-to-peer IP connection **1150** based on the proxy IP address. Control system **1130** receives the first IP packets from peer-to-peer IP connection **1150**, replaces the proxy IP address with the destination IP address, and transfers the first IP packets to IP network **1135**. IP network **1135** receives the first IP packets from control system **1130** and transfers the first IP packets to destination system **1140** based on the destination IP address.

Destination system **1140** transfers a second set of IP packets to IP network **1135**. The second IP packets are addressed to end-user system **1110** using the second end-user IP address. IP network **1135** transfers the second IP packets to control system **1130** based on the second end-user IP address. Control system **1130** replaces the second end-user IP address with the first end-user IP address. Control system **1130** transfers the second IP packets over peer-to-peer IP connection **1150**, and service provider transfers the second IP packets to end-user system **1110** based on the first end-user IP address.

The invention claimed is:

1. A method of establishing telephony service for an end-user, the method comprising:

providing software and a telephone number to the end-user, wherein the software is loaded onto a computer that is connected to a telephone and to an Internet Protocol (IP) interface to a first service provider, wherein the software is configured to direct the computer to interwork between telephony signals for the telephone and IP packets for the IP interface and include a first Class B IP address, for a service portal to a packet-based telephony service in a second service provider, and packet telephony network addresses in network-bound ones of the IP packets, wherein the first IP address is used by the first service provider to route the network-bound IP packets over a peer-to-peer IP connection to the second service provider and the packet telephony network addresses are used by the second service provider to provide the telephony service; and

configuring the second service provider to provide the packet-based telephony service to the end-user over the peer-to-peer IP connection to the first service provider.

2. The method of claim **1** wherein configuring the second service provider to provide the packet-based telephony service comprises configuring the second service provider to route packets directed toward the end-user to the peer-to-peer IP connection to the first service provider.

3. The method of claim **1** wherein configuring the second service provider to provide the packet-based telephony service comprises configuring the second service provider, for IP packets from the end-user, to replace the first class B IP address with the packet telephony network addresses.

4. The method of claim **1** wherein the software is configured to direct the computer to encapsulate ATM cells having the packet telephony network addresses in the network-bound IP packets, and further comprising configuring the second service provider to route the ATM cells to provide the packet-based telephony service.

5. The method of claim **1** wherein providing the software to the end-user comprises providing the software to the end-user through a world wide web site.

6. The method of claim **1** wherein providing the telephone number to the end-user comprises providing the telephone number to the end-user through a world wide web site.

7. The method of claim **1** further comprising receiving an end-user registration from the end-user through a world wide web site.

8. The method of claim **1** further comprising receiving a telephony service payment plan selection from the end-user through a world wide web site.

9. A method of establishing telephony service for an end-user, the method comprising:

providing an end-user device and a telephone number to the end-user, wherein the end-user connects the end-user device to a telephone and to an Internet Protocol (IP) interface to a first service provider, wherein the end-user communication device is configured to interwork between telephony signals for the telephone and IP packets for the IP interface and include a first Class B IP address, for a service portal to a packet-based telephony service in a second service provider, and packet telephony network addresses in network-bound ones of the IP packets, wherein the first IP address is used by the first service provider to route the network-bound IP packets over a peer-to-peer IP connection to the second service provider and the packet telephony network addresses are used by the second service provider to provide the telephony service; and

configuring the second service provider to provide the packet-based telephony service to the end-user over the peer-to-peer IP connection to the first service provider.

10. The method of claim **9** wherein configuring the second service provider to provide the packet-based telephony service comprises configuring the second service provider to route packets directed toward the end-user to the peer-to-peer IP connection to the first service provider.

11. The method of claim **9** wherein configuring the second service provider to provide the packet-based telephony service comprises configuring the second service provider, for IP packets from the end-user, to replace the first class B IP address with the packet telephony network addresses.

12. The method of claim **9** wherein the end-user device is configured to encapsulate ATM cells having the packet telephony network addresses in the network-bound IP packets, and further comprising configuring the second service provider to route the ATM cells to provide the packet-based telephony service.

13. The method of claim **9** wherein providing the telephone number to the end-user comprises providing the telephone number to the end-user through a world wide web site.

14. The method of claim **9** further comprising receiving an end-user device registration from the end-user through a world wide web site.

15. The method of claim **9** further comprising receiving a telephony service payment plan selection from the end-user through a world wide web site.

* * * * *