IN THE UNITED STATES PATENT AND TRADEMARK OFFICE

BEFORE THE PATENT TRIAL AND APPEAL BOARD

MICROSOFT CORPORATION AND AFFIRMED NETWORKS, INC.,
Petitioners,

v.

LEMKO CORPORATION
Patent Owner.

Case No. IPR2023-00531
U.S. Patent No. 7,855,988

DECLARATION OF INGRID HSIEH-YEE, PH.D, UNDER 37 C.F.R. § 1.68 IN SUPPORT OF PETITION FOR *INTER PARTES* REVIEW

TABLE OF CONTENTS

I. Introduction....3

A. Qualifications and Professional Experience....3

B. Scope of This Declaration....5

C. Evidence Considered in Forming My Opinions....6

II. Authentication and Public Availability of *ETSI-123002* (Ex. 0001)....8

A. Authentication....8

B. Document details of ETSI-123002....11

C. Availability of 3GPP TS 23.002 version 7.1.0 Release 7....15

D. Usage record....18

E. Summary of My Opinion on *ETSI-123002*....18

III. Conclusion....19

I. Introduction

I, Ingrid Hsieh-Yee, Ph.D., do hereby declare as follows:

1. I have been retained as an independent expert witness on behalf of Microsoft, Inc. ("MICROSOFT") for proceedings before the United States Patent and Trademark Office ("PTO") regarding the authenticity and public availability of certain prior art reference in relation to US Patent No. 7,855,988.

2. I am being compensated for my work in this matter at my customary hourly rate. I am also being reimbursed for any reasonable expenses associated with my work and testimony in this investigation. My compensation is not contingent on the results of my study, the substance of my opinions, or the outcome of this matter.

A. Qualifications and Professional Experience

3. My complete qualifications and professional experience are described in my academic *Curriculum Vitae* (**Appendix A**). The following is a brief summary of my relevant qualifications and professional experience.

4. In 2022 I retired as Professor Emerita after 32 years as a professor at the Department of Library and Information Science of the Catholic University of America. I have experience working in an academic library, a medical library, and a legislative library. I hold a Ph.D. in Library and Information Studies from the University of Wisconsin-Madison and a Masters in Library and Information Studies from the University of Wisconsin-Madison.

5. I am an expert on library cataloging and classification and have published two editions on this subject, *Organizing Audiovisual and Electronic Resources for Access*: *A Cataloging Guide* (2000 and 2006). I taught a variety of courses, including Cataloging and Classification, Advanced Cataloging and Classification, Organization of Internet Resources, Organization of Information, Digital Content Creation and Management, Internet Searches and Web Design, Information Literacy Instruction, Advanced Information Retrieval and Analysis Strategies, and The Information Professions in Society. I am familiar with database design and metadata schema design and implementation. In my teaching I covered the design and implementation of metadata in databases, search engines, digital repositories, digital libraries, and digital archives. I also covered how information organization affects the discovery and access to digital resources on the Internet. My research interests cover cataloging and classification, information organization, metadata, information retrieval, information architecture, digital collections, scholarly communication, user interaction with information systems, and others.

6. I am personally familiar with many online catalogs, databases, and search engines. In preparing for this declaration, I used the following authoritative information systems to search for records:

- 3GPP Portal for Specification # 23.002 (https://portal.3gpp.org/desktopmodules/Specifications/SpecificationDetails.aspx?specificationId=728)
- 3GPP to ETSI numbering cross-referencing system (https://webapp.etsi.org/key/key.asp?GSMSpecPart1=23&GSMSpecPart2=002&Search=search)
- ETSI Work Programme simple search engine (https://portal.etsi.org/webapp/WorkProgram/SimpleSearch/QueryForm.asp)
- Google Scholar (https://scholar.google.com)
- Internet Archive (https://archive.org/)

B. Scope of This Declaration

7. I have been asked to offer expert opinion on the authenticity and public availability date of the following document:

ETSI TS 123 002 v7.1.0 (2006-03), Technical Specification, Digital cellular telecommunications system (Phase 2+); Universal Mobile Telecommunications System (UMTS); Network architecture, 3GPP TS 23.002 version 7.1.0 Release 7, available at https://www.etsi.org/deliver/etsi_ts/123000_123099/123002/07.01.00_60/ts_123002v070100p.pdf from the European Telecommunications

Standards Institute (ETSI) website, accessed and obtained on January 25, 2023, **Ex. 0001** ("*ETSI-123002*").

C. Evidence Considered in Forming My Opinions

8. In the preparation of this declaration, I have reviewed the documents referenced below and any other documents I reference herein, and each of these is a type of material that experts in my field would reasonably rely upon when forming their opinions:

(1) The document referenced above in Section I.B;

(2) Search results from the "3GPP to ETSI numbering cross-referencing" system, available at https://webapp.etsi.org/key/key.asp?GSMSpecPart1=23&GSMSpecPart2=002&Search=search, accessed and obtained on February 10, 2023, **Appendix 0001A**;

(3) The 2023 ETSI Work Programme simple search engine at https://portal.etsi.org/webapp/WorkProgram/SimpleSearch/QueryForm.asp and a copy of this search interface archived by the Internet Archive on May 4, 2006, and available at https://web.archive.org/web/20060504094528/http://webapp.etsi.org/WorkProgram/SimpleSearch/QueryForm.asp, accessed and obtained on January 25 and February 9, 2023, **Appendix 0001B**;

(4) Search results from Work Programme, search executed on January 25, 2023, results available at https://portal.etsi.org/webapp/WorkProgram/Frame_WorkItemList.

asp?qSORT=HIGHVERSION&qETSI_ALL=TRUE&SearchPage=TRUE&qETSI_STANDARD_TYPE=%27TS%27&qETSI_NUMBER=123002&qINCLUDE_SUB_TB=True&qINCLUDE_MOVED_ON=&qSTOP_FLG=&qKEYWORD_BOOLEAN=&qCLUSTER_BOOLEAN=&qFREQUENCIES_BOOLEAN=&qSTOPPING_OUTDATED=&butSimple=Search&includeNonActiveTB=FALSE&includeSubProjectCode=&qREPORT_TYPE=SUMMARY, the first 10 items and items 31 to 40 are included, **Appendix 0001C**;

(5) Detailed record for *ETSI-123002* available at https://portal.etsi.org/webapp/WorkProgram/Report_WorkItem.asp?WKI_ID=24668, accessed and obtained on January 25, 2023, **Appendix 0001D**;

(6) Details of 'RTS/TSGS-0223002v710' Work Item Schedule available at https://portal.etsi.org/eWPM/index.html#/schedule?WKI_ID=24668, accessed and obtained on January 25, 2023, **Appendix 0001E**;

(7) 3GPP Portal for Specification series 23.002, available at https://portal.3gpp.org/desktopmodules/Specifications/SpecificationDetails.aspx?specificationId=728 and FTS Directory for

Specification # 23.002 at https://www.3gpp.org/ftp/Specs/archive/23_series/23.002/, accessed and obtained on January 25, 2023, **Appendix 0001F**;

(8) FTP directory for Specification #23.002 archived by the Internet Archive on May 26, 2006, available at https://web.archive.org/web/20060526165717/https://www.3gpp.org/ftp/Specs/archive/23_series/23.002/, accessed and obtained on January 25 and February 9, 2023, **Appendix 0001G**;

(9) 3GPP TS 23.002 V7.1.9 (2006-03) Technical Specification, 3rd Generation Partnership Project; Technical Specification Group Services and Systems Aspects; Network architecture (Release 7), archived by the Internet Archive and available from https://web.archive.org/web/20060526165717/https://www.3gpp.org/ftp/Specs/archive/23_series/23.002/ (select "23002-710.zip"), accessed and obtained on February 9, 2023, **Appendix 0001H**.

II. Authentication and Public Availability of *ETSI-123002* (Ex. 0001)

A. Authentication

9. **Ex. 0001** is a true and correct copy of "ETSI TS 123 002 v7.1.0 (2006-03), Technical Specification, Digital cellular telecommunications system (Phase 2+); Universal Mobile Telecommunications System (UMTS); Network architecture,

3GPP TS 23.002 version 7.1.9 Release 7," ("*ETSI-123002*"), by 3GPP that I obtained from the European Telecommunications Standards Institute (ETSI) website. When I began preparing this declaration, I searched Google by the title of this work and the search results showed that this document was available as "ETSI TS 123002-V7.1.0" and also available at the 3GPP Portal for Specification # 23.002. I then searched the ETSI for "ETSI TS 123002-V7.1.0" and downloaded the copy from https://www.etsi.org/deliver/etsi_ts/123000_123099/123002/07.01.00_60/ts_123002v070100p.pdf. This ETSI copy is presented as **Ex. 0001** in this declaration.

10. **Ex. 0001** is a true and correct copies of *ETSI-123002*. Page 1 is the title page that identifies the document as "ETSI TS 123 002 v7.1.0 (2006-03) Technical Specification," and shows the title as "Digital cellular telecommunications system (Phase 2+); Universal Mobile Telecommunications System (UMTS); Network architecture (3GPP TS 23.002 version 7.1.0 Release 7)." The page also shows the trademarks of 3GPP and GSM (Global System for Mobile Communications) and identifies ETSI as the publisher. Page 2 is the copyright page that shows "RTS/TSGS-0223002v710" as the reference number of this document, "GSM, UMTS" as keywords, and ETSI of France as the publisher. It also shows a "2006" copyright date and the European Telecommunications Standards Institute as the copyright holder. Page 3 (internal page 2) is the Foreword that shows this

"Technical Specification (TS) has been produced by ETSI 3rd Generation Partnership Project (3GPP)." It also states that this document "may refer to technical specifications or reports using their 3GPP identities, UMTS identities or GSM identities. These should be interpreted as being references to the corresponding ETSI deliverable" and "[t]he cross reference between GSM, UMTS, 3GPP and ETSI identities can be found under http://webapp.etsi.org/key/queryform.asp." I then searched this system by 3GPP TS "23.002" (as presented on the title page) to determine the relationship between 3GPP TS 23.002 and *ETSI-123002* (**Ex. 0001**). This search result is presented as **Appendix 0001A** in this declaration.

11. Page 3 of **Appendix 0001A** shows the corresponding ETSI identity for "3GPP TS 23.002 version 7.1.0 Release 7" is ETSI "TS 123 002, RTS/TSGS-0223002v710" that has the version number "7.1.0" and an "achieved date" of "2006-05-15" with the title of "Digital cellular telecommunications system (Phase 2+); Universal Mobile Telecommunications System (UMTS); Network architecture (3GPP TS 23.002 version 7.1.0 Release 7)." A screenshot is included here for reference.

23.002	TS 123 002 RTS/TSGS-0223002v710	7.1.0 2006-05-15	Digital cellular telecommunications system (Phase 2+); Universal Mobile Telecommunications System (UMTS);Network architecture(3GPP TS 23.002 version 7.1.0 Release 7)

The "TS 123 002" document link for this entry brought up the full text of **Ex. 0001**, and clarified that "ETSI TS 123 002 v7.1.0 (2006-03)" and "3GPP TS 23.002

version 7.1.0 Release 7" refer to the same document that covers the technical specification for "digital cellular telecommunications system (Phase 2+); Universal Mobile Telecommunications System (UMTS); Network architecture."

12. Internal pages 3 to 7 of **Ex. 0001** are the table of contents that shows this standard has seven parts, two annexes, and a total of 62 pages of text. The body of this document, from internal pages 1 to 62, shows a running title of "3GPP TS 23.002 version 7.1.0 Release 7. ETSI TS 123 002 V7.1.0 (2006-03)" and the document history on internal page 62 shows V7.1.0 has a "March 2006" publication date.

13. *ETSI-123002* (**Ex. 0001**) is in a condition that creates no suspicion about its authenticity. Specifically, this copy is not missing any intermediate pages, the text on each page appears to flow seamlessly from one page to the next, and there are no visible alterations to the document. Moreover, **Ex. 0001** is found in the custody of the European Telecommunications Standards Institute, a place where, if authentic, it would likely be found. I therefore see no reason to question the authenticity of this copy of *ETSI-123002*.

B. Document details of *ETSI-123002*

14. To locate *ETSI-123002* and details about this standard, I used the ETSI Work Programme simple search engine at https://portal.etsi.org/webapp/WorkProgram/SimpleSearch/QueryForm.asp.

Appendix 0001B is a true and correct copy of the Work Programme simple search engine. Page 1 is a screenshot of the search engine interface in 2023, page 2 is the PDF of the same interface, and page 3 is a screenshot of the interface archived by the Internet Archive. The top of page 3 includes a Wayback Machine calendar that shows this search engine was captured 100 times from "7 Apr 2000" to "10 Oct 2022" and this particular copy was archived on May 4, 2006. Page 3 also shows the search engine's original URL is http://webapp.etsi.org/WorkProgram/SimpleSearch/QueryForm.asp and the archived copy is available at https://web.archive.org/web/20060504094528/http://webapp.etsi.org/WorkProgram/SimpleSearch/QueryForm.asp. Internet Archive is a digital library that archives documents, scholarly resources and cultural heritage resources on the Internet and the general public can access the digital library for free. I have used this system for many research projects and am familiar with its file naming system that assigns an extended URL to each archived item. The "20060504094528" in the extended URL above is the time the web resource represented by http://webapp.etsi.org/WorkProgram/SimpleSearch/QueryForm.asp was archived, meaning this search engine interface was archived on May 4, 2006, 9 a.m., 45 minutes, 28 seconds. **Appendix 0001B** shows the Work Programmed simple search engine was in place by at least April 7 2000 when the Internet Archive began

archiving it, and the engine was available on May 4, 2006 to help users locate documents of interest to them.

15. In response to my query to locate ETSI documents that contained "123002" and "TS," the engine retrieved 63 documents. **Appendix 0001C** is a true and correct copy of the search results of my query. The results are available at https://portal.etsi.org/webapp/WorkProgram/Frame_WorkItemList.asp?qSORT=HIGHVERSION&qETSI_ALL=TRUE&SearchPage=TRUE&qETSI_STANDARD_TYPE=%27TS%27&qETSI_NUMBER=123002&qINCLUDE_SUB_TB=True&qINCLUDE_MOVED_ON=&qSTOP_FLG=&qKEYWORD_BOOLEAN=&qCLUSTER_BOOLEAN=&qFREQUENCIES_BOOLEAN=&qSTOPPING_OUTDATED=&butSimple=Search&includeNonActiveTB=FALSE&includeSubProjectCode=&qREPORT_TYPE=SUMMARY. **Appendix 0001C** shows the screenshots and PDF of the first 10 items and items 31 to 40, and Item 38 is the entry for ETSI "TS 123 002 Ver. 7.1.0" that has a reference number of "RTS/TSGS-0223002v710" for a document created by 3GPP. The entry shows this standard was "published" and its current status is "Publication (2006-05-15)."

16. Following the "Details and Download" I reached a metadata record in Work Programme that shows details of "RTS/TSGS-0223002v710." This record is presented as **Appendix 0001D** in this declaration. Page 1 is a screenshot and page 2 is the PDF of the record. The top of the record on page 1 shows it is available at

https://portal.etsi.org/webapp/WorkProgram/Report_WorkItem.asp?WKI_ID=24668. The record shows the reference number of this standard, identifies it as ETSI TS 123 002 version 7.1.0 and shows "3GPP SA2" is the technical body in charge of this standard. The record also shows the current status of the standard is "Publication (2006-05-15), its cover date is "2006-03-31" and its creation date is "2006-03-27." The record also shows the rapporteur, technical officer, title, keywords ("GSM, UMTS"), projects ("3GPP, 3Gpp-Release-7, 3GPP-SA"), and cluster ("Wireless Systems") of this document. The ETSI number, version, cover date, creator and keywords match the information presented in **Ex. 0001**, confirming this metadata record represents *ETSI-123002*.

17. I followed the link for "Publication (2006-05-15)" under Current Status in **Appendix 0001D** and reached the "work item schedule" of RTS/TSGS-0223002v710, which is presented as **Appendix 0001E** in this declaration.

18. **Appendix 0001E** is a true and correct copy of this schedule available at https://portal.etsi.org/eWPM/index.html#/schedule?WKI_ID=24668. Page 1 is a screenshot and page 2 is a PDF version of this schedule. **Appendix 0001E** shows this document was completed and approved on "2006-03-16" (*i.e.*, March 16, 2006), the draft was received by ETSI Secretariat on "2006-03-24" (*i.e.*, March 24, 2006), and version 7.1.0 was published by ETSI on "2006-05-15" (*i.e.*, May 15, 2006).

19. **Ex. 0001** shows *ETSI-123002* is also known as "3GPP TS 23.002 version 7.1.0 Release 7." *ETSI-123002* carries a "2006-03" date and its publication history shows it was published in March 2006. The ETSI Work Programme simple search engine retrieved details and schedule of this document, indicating the document was received by ETSI on March 24, 2006 and published on May 15, 2006. These dates inform my opinion that *ETSI-123002* (also known as 3GPP TS 23.002 version 7.1.0 Release 7) was published by ETSI on May 15, 2006, and would have become publicly accessible from that date on at ETSI. Interested users would have been able to search the Work Programme by the ETSI number, 3GPP number, title, reference number and keywords to locate this document.

C. Availability of 3GPP TS 23.002 version 7.1.0 Release 7

20. Because *ETSI-123002* is the same as 3GPP TS 23.002 version 7.1.0 Release 7, I researched the availability of the latter on the Google search engine. **Appendix 0001F** is a true and correct record of my search path. I searched for "Specification #23.002" in Google, and a 3GPP link led me to the 3GPP Portal for this specification at https://portal.3gpp.org/desktopmodules/Specifications/SpecificationDetails.aspx?specificationId=728 (page 1 of **Appendix 0001F**). I followed the link "Click to see all versions of this specification" to reach the FTP directory for this specification at https://www.3gpp.org/ftp/Specs/archive/23_series/23.002/ (pages 2 to 5 of

Appendix 0001F), and then selected the entry for "23002-710.zip" to download this document. A screenshot of this entry is included here for easy reference:

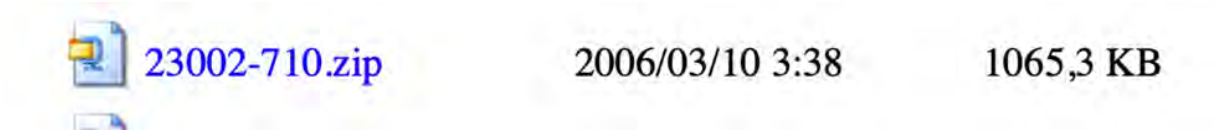

The zip file is unpacked and included in this declaration as **Appendix 0001H** in this declaration. It will be discussed further below.

21. **Appendix 0001F** shows 23002-710.zip was available by "2006/03/10" (*i.e.*, March 10, 2006). As evidence of its availability on the Internet, I searched the Internet Archive for the FTP directory of Specification 23.002, and found a copy archived on May 26, 2006. This Internet Archive copy is presented as **Appendix 0001G** in this declaration.

22. **Appendix 0001G** is a true and correct copy of the FTP directory for Specification 23.002 archived by the Internet Archive. Page 1 is a Wayback Machine calendar that shows this FTP directory was archived "119 times between January 10, 2002 and October 5, 2022." Page 2 is a screenshot of the directory with a Wayback Machine calendar that shows the original URL of this FTP directory and indicates this particular copy was archived on "20060526165717" (*i.e.*, May 26, 2006, 4 p.m., 57 minutes, 17 seconds). Page 3 is the full directory in PDF that shows "23002-710.zip," the 3GPP document, was available on "10 March 2006." **Appendix 0001G** informs my opinion that the 3GPP document that was published

as *ETSI-123002* later was available for download as early as March 10, 2006, and no later than May 26, 2006, when the FTP directory was archived by the Internet Archive.

23. The document downloaded from "23002-710.zip" is a Word document. It is saved as PDF and presented as **Appendix 0001H** in this declaration. The title page shows "3GPP TS 23.002 v7.1.0 (2006-03) Technical Specification, 3rd Generation Partnership Project; Technical Specification Group Services and Systems Aspects; Network architecture (Release 7)." It also shows the trade marks of GSM and 3GPP and includes a statement that this document "has been developed within the 3rd Generation Partnership Project (3GPP) and may be further elaborated for the purposes of 3GPP." Page 2 shows "GSM, UMTS, network, architecture" as keywords of this document, and 3GPP of France as the responsible body for this work. It also shows a "2006" copyright date and 3GPP Organizational Partners (ARIB, ATIS, CCSA, ETSI, TTA, TTC) are the copyright holder. Internal pages 3 to 7 are the table of contents, the document shows "Release 7 3GPP TS 23.002 V7.1.0 (2006-03)" as a running title, and ends on page 61 with change history of this document. I have closely compared this document with *ETSI-123002* (**Ex. 0001**) and found the main text of both documents is the same. The differences are that **Appendix 0001H** includes some comments on page 61 and *ETSI-123002* (**Ex. 0001**) includes publisher information and a document history on page 62.

D. Usage record

24. Actual usage of a publication is reflected by the papers that make reference to it. I have located through Google Scholar at least two 2008 citations to *ETSI-123002* to demonstrate early usage:

- Liu, F., Fu, C. H., & Yang, C. (2008, September). A study on performance comparison of priority-based queueing scheme with two queueing buffer allocations in an UMTS core network gateway. In *Proceedings of the International Conference on Mobile Technology, Applications, and Systems* (pp. 1-8). Reference #6 shows "ETSI TS 123 002, Network Architecture, V7.1.0, Mar. 2006."
- David Hutton, V. (Ed.). (2008). MSFR4 Implementation Agreement for the DB-2 interface. Available online at https://citeseerx.ist.psu.edu/document?repid=rep1&type=pdf&doi=180b98b45a0635eb309d80c36dc7dbd04d90f577. Reference #5 shows "3GPP TS 23.002: 'Network architecture'; Release 7."

E. Summary of My Opinion on *ETSI-123002*

25. The title page of *ETSI-123002* (**Ex. 0001**) shows a date of "2006-03" and its document history page shows a "March 2006" publication date. ETSI metadata record (**Appendix 0001D**) and work schedule (**Appendix 0001E**) show a

publication date of May 15, 2006, after the 3GPP document was received by ETSI on March 24, 2006. It is therefore my opinion that *ETSI-123002* would have become publicly accessible from May 15, 2006 on. Because ETSI-123002 and 3GP TS 23.002 version 7.1.0 Release 7 (**Appendix 0001H**) refer to the same technical specification, I researched the public availability date of the latter. Current 3GPP Portal (**Appendix 0001F**) and Internet Archive record of the FTP directory (**Appendix 0001G**) inform my opinion that 3GP TS 23.002 version 7.1.0 Release 7 was publicly accessible as early as March 10, 2006, and no later than May 26, 2006, when the FTP directory was archived by the Internet Archive. Citation history shows the earliest citations appeared in 2008.

III. Conclusion

26. In signing this declaration, I recognize that the declaration will be filed as evidence in a Petition for *Inter Partes* Review before the Patent Trial and Appeal Board of the United States Patent and Trademark Office. I also recognize that I may be subject to deposition in the case. If deposition is required of me, I will appear at a reasonable time and place to be agreed upon.

27. All statements made herein of my own knowledge are true, and all statements made on information and belief are believed to be true. Further, I am aware that these statements are made with the knowledge that willful false statements and the like so made are punishable by fine or imprisonment, or both,

under 18 U.S.C. § 1001. I declare under penalty of perjury that the foregoing is true and correct.

Date 2-14-2023 Executed by Ingrid Hsieh-Yee

Ingrid Hsieh-Yee

Microsoft - Exhibit 1012
Microsoft v. Lemko- IPR2023-00531
Page 20 of 203

APPENDIX A

Ingrid Hsieh-Yee

Professor Emerita
Dept. of Library and Information Science
Catholic University of America
Washington, D.C. 20064
E-mail: hsiehyee@cua.edu

Education

Ph.D. 1990. Library and Information Studies, University of Wisconsin-Madison
Minors: Sociology and Psychology

M.A. 1984. Library and Information Studies, University of Wisconsin-Madison.

M.A. 1983. Comparative Literature, University of Wisconsin-Madison.

B.A. 1980. Foreign Languages and Literature, National Taiwan University.

Work Experience

Professor, School/Dept. of Library and Information Science, Catholic University of America, 1990-2022 (Assistant Professor, 1990-1996; Associate Professor, 1997-2004; Professor 2004-2022; Professor Emerita 2022)

Co-Chair, Dept. of Library and Information Science, Catholic University of America, June 2015-August 2016.

Acting Dean, School of Library and Information Science, Catholic University of America, January 2010-June 2012.

Cataloger, Dept. of Legislative Reference Library, Annapolis, Maryland, 1989-1990.

Lecturer, School of Library and Information Studies, University of Wisconsin-Madison, 1988.

Teaching Assistant, School of Library and Information Studies, University of Wisconsin-Madison, 1986-1988.

Cataloger, Health Sciences Library, University of Wisconsin-Madison, 1984-1986.

Areas of Teaching and Research Interests

Information Organization and Access; Metadata; Cataloging & Classification; Information Architecture; Information Retrieval; Digital Collections; Social Media; Scholarly

Communication; Information Behavior; Health Informatics; Human Computer Interaction; Usability Studies

Grants & Honors

Cultural Heritage Information Management Project. IMLS grant. Amount: $498,741. Period: Aug. 2012 to July 2015. Co-PI with Dr. Youngok Choi.

D.C. Health Information Technology (HIT4): Building Capacity & Providing Access in Our Nation's Capital. Dept. of Labor H2B Training Grant. Grant amount: $4,175,500. Grant period: Nov. 2011 to Dec. 2015. Partner with the Metropolitan School of Professional Studies of the Catholic University of America, Children's National Medical Center, D.C. Department of Employment Services, Holy Cross Hospital, Howard University, Center for Urban Progress, Providence Hospital, and Sibley Memorial Hospital.

Capital Health Careers Project. Department of Labor Healthcare Sector and Other High Growth and Emerging Industries Grant. Grant amount: $4,953,999. Grant period: March 2010 – February 2013. Awarded to a group of healthcare organizations and educational institutions in Washington, D.C. Providence Health Foundation of Providence Hospital (Lead institution). Part of the grant supported the development of a Master's degree program in Information Technology with a concentration in Health Information Technology offered by the School of Library and Information Science.

The Washington D.C. School Librarians Project. IMLS grant. Grant amount: $412,660. Grant period: Aug. 2007 – June 2011. The School partnered with the District of Columbia Public Schools (DCPS) and the District of Columbia Library Association to educate and mentor school media specialists for the DCPS system. PI, Jan. 2010 to June 2011.

SIG Member of the Year, American Society for Information Science and Technology (2009).

Most Outstanding Paper of *OCLC Systems & Services* (2001).

ALISE Research Grant (2001).

Most Outstanding Paper of *OCLC Systems & Services* (2000).

Research Grant from ERIC (1999-2000).

Best Research Paper Award; Association for Library and Information Science Education (1998).

Research Grants, Catholic University of America. 1991, 1992, 1993, 1996, 1998, 1999, 2004, 2005, 2006, 2007, 2013-14.

Cooperative Faculty Research Grant, Consortium of Universities in the Washington Metropolitan Area (1993-1994).

Cooperative Research Grant, Council on Library Resources (1993-1994).

Journal of the American Society for Information Science Best Paper Award (1993).

ASIS/ISI Information Science Doctoral Dissertation Scholarship (1989).

HEA Title IIB Fellowship (Dept. of Education) (1989)

Chinese-American Librarians Association Scholarship (1987).

Beta Phi Mu (1985).

Vilas Fellowship, University of Wisconsin-Madison. 1984

Publications

Hsieh-Yee, I. (2021). Can We Trust Social Media? *Internet Reference Services Quarterly*, 1-15. Published online: 28 July, 2021. 10.1080/10875301.2021.1947433.

Bailey, T., & Hsieh-Yee, I. (2020). Combating the Sharing of False Information: History, Framework & Literacy Strategies, *Internet Reference Services Quarterly*, 24 (1-2), 9-30.

Choi, Y., and Hsieh-Yee, I. (2010). Finding Images in an OPAC: Analysis of User Queries, Subject Headings, and Description Notes. *Canadian Journal of Information and Library Science,* 34(3): 271 – 295.

Hsieh-Yee, I. (2008). Educating Cataloging Professionals in a Changing Information Environment. *Journal of Education for Library and Information Science,* 46(2): 93-106.

Vellucci, S. L., Hsieh-Yee, I., and Moen, W.E. (2007). The Metadata Education and Research Information Commons (MERIC): A Collaborative Teaching and Research Initiative. *Education for Information,* 25(3&4): 169-178.

NISO Framework for Guidelines for Building Good Digital Collections. 3rd ed. Baltimore, MD: National Information Standards Organization, 2007. Also available online: http://www.niso.org/framework/framework3.pdf (NISO Working Group members: Priscilla Caplan (chair), Grace Agnew, Murtha Baca, Tony Gill, Carl Fleischhauer, Ingrid Hsieh-Yee, Jill Koelling, and Christie Stephenson.)

Choi, Y., Hsieh-Yee, I., and Kules, B. (2007). Retrieval Effectiveness of TOC and LCSH. *Proceedings of the Joint Conference on Digital Libraries*, pp. 233-234.

Vellucci, S., and Hsieh-Yee, I. (2007). They Didn't Teach Me That in Library School! Building

a Digital Teaching Commons to Enhance Metadata Teaching, Learning and Research. *Proceedings of the National Conference of the Association of College and Research Libraries, Baltimore, MD*, pp. 26-31.

Mitchell, Vanessa, and Ingrid Hsieh-Yee. (2007). Converting Ulrich's Subject Headings to FAST Headings: A Feasibility Study. *Cataloging & Classification Quarterly,* 45(1): 59-85.

Hsieh-Yee, I., Tang, R., and Zhang, S. (2007). User Perceptions of a Federated Search System. *IEEE Technical Committee on Digital Libraries Bulletin,* Summer 3(2) (URL = http://www.ieee-tcdl.org).

Tang, R., Hsieh-Yee, I., and Zhang, S. (2007). User Perceptions of MetaLib Combined Search: An Investigation of How Users Make Sense of Federated Searching." *Internet Reference Services Quarterly,* 12(12): 211-236.

Hsieh-Yee, I., Tang, R., and Zhang, S. (2006). User Perceptions of a Federated Search System. *Proceedings of the Joint Conference on Digital Libraries*, *June 11-15, 2006, Chapel Hill*, p. 338.

Hsieh-Yee, I. (2006). *Organizing Audiovisual and Electronic Resources for Access: A Cataloging Guide*. 2nd ed. Westport, Conn.: Libraries Unlimited.

NISO A Framework of Guidance for Building Good Digital Collections. 2nd ed. Bethesda, MD: National Information Standards Organization, 2004. Framework Advisory Group: Grace Agnew, Liz Bishoff, Priscilla Caplan (Chair), Rebecca Gunther and Ingrid Hsieh-Yee.

Hsieh-Yee, I. (2004). Cataloging and Metadata Education in North American LIS Programs. *Library Resources & Technical Services,* 48(1): 59-68.

Hsieh-Yee, I. (2004). Cataloging and Metadata Education. In Gary E. Gorman (Ed.), *International Yearbook of Library and Information Management 2003: Metadata Applications and Management*, (pp.204-234). London: Facet Publishing.

Yee, P. L., Hsieh-Yee, I., Pierce, G.R., Grome, R., and Schantz, L. (2004). Self-Evaluative Intrusive Thoughts Impede Successful Searching on the Internet. *Computers in Human Behavior,* 20(1): 85-101.

Hsieh-Yee, I. (2003). Cataloging and Metadata Education: A Proposal for Preparing Cataloging Professionals of the 21st Century. A report submitted to the ALCTS-Education Task Force in response to Action Item 5.1 of the *Bibliographic control of Web Resources: A Library of Congress Action Plan*. Approved by the Association for Library Collections and Technical Services. Web version available since April 2003 at http://lcweb.loc.gov/catdir/bibcontrol/CatalogingandMetadataEducation.pdf.

Hsieh-Yee, I. (2002). Cataloging and Metadata Education: Asserting a Central Role in Information Organization. *Cataloging & Classification Quarterly* 34(½): 203-222.

Hsieh-Yee, I., and Smith, M. (2001). The CORC Experience: Survey of Founding Libraries, Part I. *OCLC Systems & Services,* 17: 133-140. (Received "The Most Outstanding Paper of OCLC Systems & Services in 2001" award.)

Hsieh-Yee, I., and Smith, M. (2001). The CORC Experience: Survey of Founding Libraries, Part II, Automated Tools and Usage. *OCLC Systems & Services,* 17: 166-177. (Received "The Most Outstanding Paper of OCLC Systems & Services in 2001" award.)

Hsieh-Yee, I. (2001). ERIC User Services: Changes and Evaluation for the Future. *Government Information Quarterly,* 18: 31-42.

Hsieh-Yee, Ingrid. (2001). Research on Web Search Behavior. *Library and Information Science Research,* 23: 167-185.

Logan, E., and Hsieh-Yee, I. (2001). Library and Information Science Education in the Nineties. *Annual Review of Information Science and Technology,* 35: 425-477.

Hsieh-Yee, I. (Ed.) (2001). *Library and Information Science Research*, 23 (2). A special issue in honor of the retirement of Douglas L. Zweizig.

Hsieh-Yee, I. (2000). *ERIC User Services: Evaluation in a Decentralized Environment*. Washington, D.C.: Dept. of Education.

Hsieh-Yee, Ingrid. (2000). *Organizing Audiovisual and Electronic Resources for Access: A Cataloging Guide*. Littleton, CO: Libraries Unlimited.

Hsieh-Yee, I. (2000). Organizing Internet Resources: Teaching Cataloging Standards and Beyond. *OCLC Systems & Services,* 16: 130-143. (Received "The Most Outstanding Paper of OCLC Systems & Services in 2000" award.)

Hsieh-Yee, I. (1998). The Retrieval Power of Selected Search Engines: How Well Do They Address General Reference Questions and Subject Questions? *Reference Librarian,* 60: 27-47.

Hsieh-Yee, I. (1998). Search Tactics of Web Users in Searching for Texts, Graphics, Known Items and Subjects: A Search Simulation Study. *Reference Librarian,* 60: 61-85. (Received the 1997 Best ALISE Research Paper Award.)

Hsieh-Yee, I. (1997). Access to OCLC and Internet Resources: LIS Educators' Views and Teaching Practices. *RQ,* 36: 569-86.

Hsieh-Yee, I. (1997). Teaching Online and CD-ROM Resources: LIS Educators' Views and Practices. *Journal of Education for Library and Information Science,* 38: 14-34.

Hsieh-Yee, I. (1996). The Cataloging Practices of Special Libraries and Their Relationship with OCLC. *Special Libraries,* 87: 10-20.

Hsieh-Yee, I. (1996). Modifying Cataloging Practice and OCLC Infrastructure for Effective Organization of Internet Resources. In *Proceedings of the OCLC Internet Cataloging Colloquium*. [Online]. Available: http://www.oclc.org/oclc/man/colloq/hsieh.htm

Hsieh-Yee, I. (1996). Student Use of Online Catalogs and Other Information Channels. *College & Research Libraries,* 57: 161-175.

Hsieh-Yee, I. (1995). Ten entries in James S. C. Hu (Ed.), *Encyclopedia of Library & Information Science*, 913, 1028-29, 1036, 1037, 1145-46, 1514, 1575, 1763-64, 2216-27, 2378-79. Taipei, Taiwan: Sino-American Publishing. (Topics include "Advanced Technology/Libraries," "Information Ethics," "Instruction on Cataloging and Classification," "Instruction on Reference Services.")

Hsieh-Yee, I. (1993). Effects of Search Experience and Subject Knowledge on Online Search Behavior: Measuring the Search Tactics of Novice and Experienced Searchers. *Journal of the American Society for Information Science,* 44: 161-174. (Received the 1993 Best JASIS Paper Award.)

Works in Progress

Hsieh-Yee, I. Actionable lessons for debunking false information: A comparative analysis of literacy lessons in communication and library and information science

Hsieh-Yee, I. Representing diverse voices and communities in cataloging and indexing: The evolution of controlled vocabularies

Hsieh-Yee, I. Information Organization and Retrieval in Practice (a monograph scheduled for completion and publication in 2023)

Presentations

Bailey, T. & Hsieh-Yee, I. (February 2020). The Phenomena of Sharing Misinformation and the Need for Information Literacy. Presented at the 2020 Bridging the Spectrum Symposium, Washington, D.C., February 14, 2020.

Hsieh-Yee, I. and Fragan-Fly, J. (May 2018) Trends, Design & Strategies for Digital Scholarship Services. Presented at the 2018 Maryland/Delaware Library Association Conference, Cambridge, MD.

Hsieh-Yee, I. (February, 2018) Research Data Management: What It Takes to Succeed. Presented at the 10th Bridging the Spectrum Symposium, Washington, D.C.

Hsieh-Yee, I. (February, 2017) *Research Data Management: New Competencies and Opportunities for Information Professionals*. Presented at the 9th Bridging the Spectrum Symposium, Washington, D.C.

Hsieh-Yee, I. and Lawton, P. (February, 2017) *Enhancing Catholic Portal Searches with User Terms and LCSH*. Presented at the 9th Bridging the Spectrum Symposium, Washington, D.C.

Hsieh-Yee, I. (2016, October) *Visualizing Data for Information*. Presented at the 2016 Virginia Library Association Conference, Hot Springs, VA.

Hsieh-Yee, I. (2016, August) *Religious Materials Toolbox for Archivists: Solutions to Problems Facing the Profession*. Presented at Archives * Records 2016, Atlanta, GA.

Hsieh-Yee, I. and Lawton, P. (2016, March) *Enhancing Retrieval of Catholic Materials with LCSH Knowledge Structure*. Presented at the 2016 Catholic Library Association Conference, San Diego, CA.

Fagan-Fry, J. and Hsieh-Yee, I. (2016, February) *Approaches to Digital Scholarship at Top Universities around the World: Scholarly Publishing in the Digital Age.* Presented at the 8th Bridging the Spectrum Symposium, Washington, D.C.

Hsieh-Yee and Fagan-Fry, J. (2016, January) *Innovative Services for Digital Scholarship at Top 100 Research Libraries of the World*. Poster presented at the 2016 Annual Conference of the Association for Library and Information Science Education, Boston, Mass.

Hsieh-Yee, I. and Lawton, P. (2015, June). *Crowdsourcing terms for CRRA portal themes.* Poster presented at the third CRRA symposium and annual meeting, Bringing the created toward the Creator: Liturgical art and design since Vatican II. Catholic Theological Union, Chicago, Illinois.

Hsieh-Yee, I. and Lawton, P. (2015, February). *Crowdsourcing terms for thematic exploration in the Catholic Portal.* Poster presented at the 7th Annual Bridging the Spectrum Symposium, Washington, D.C.

Hsieh-Yee, I., James, R., and Fagan-Fry, J. (2015, February). *Support for digital scholarship at top university libraries of the world*. Poster presented at the 7th Annual Bridging the Spectrum Symposium, Washington, D.C.

Hsieh-Yee, I., Zhang, S., Lin, K., and Cherry, S. (2015, February). *Thus said the end users: Summon experience and support for research workflows*. Poster presented at the 7th Annual Bridging the Spectrum Symposium, Washington, D.C.

Yontz, E., Hsieh-Yee, I., & Houston, S. (2015, February). *Healthy Heroes Summer Reading Club: Developing healthy youth at public libraries.* 11th Annual Jean Mills Health Symposium, Greenville, North Carolina.

Yontz, E., Hsieh-Yee, I., and Houston, S. (2015, January). *Healthy youth and libraries: A pilot study.* Association for Library & Information Science Education (ALISE) Annual Conference, Chicago, Illinois.

Hsieh-Yee, I. (2014, May). *Linking CRRA resources to portal themes via authority files*. Presented at the Catholic Research Resources Alliance 2014 Membership Meeting, Marquette, WI.

Hsieh-Yee, I. (2014, April). *Enhancing subject access to CRRA resources*. Presented at the 2014 Catholic Library Association Conference, Pittsburgh, PA.

Hsieh-Yee, I. (2014, January). *Health Information Technology Program: Educational entrepreneurship in action*. Presented at the 2014 annual Conference of the Association for Library and Information Science Education, Philadelphia, PA

Hsieh-Yee, I., Zhang, S., Lin, K., and Cherry, S. (2014, January). *Discovering information through Summon: An analysis of user search strategies and search success*. Paper presented at the 6th Bridging the Spectrum Symposium, Washington, D.C.

Hsieh-Yee, I. (2012, December). *National Digital Stewardship Alliance and SLIS at CUA: An Educational Partnership*. Paper presented at Best Practices Exchange: Acquiring, Preserving, and Providing Access to Government Information in the Digital Era, Annapolis, MD

Choi, Y. and Hsieh-Yee, I. (2010, January). *Finding Images in an OPAC: Analysis of User Queries, Subject Headings, and Description Notes*. Paper presented at 2nd Annual Bridging the Spectrum Symposium, Catholic University of America, Washington, D.C.

Hsieh-Yee, I. and Coogan, J. (2010, January). *Google Scholar vs. Academic Search Premier: What Libraries and Searchers Need to Know*. Paper presented at 2nd Annual Bridging the Spectrum Symposium, Catholic University of America, Washington, D.C.

Hsieh-Yee, I. (2009, November). *Information Science Education: An LIS School's Perspective*. Paper presented at Annual Meeting of the American Society for Information Science and Technology, Vancouver, British Columbia, Canada.

Hsieh-Yee, I., Menard, E., Ya-Ning Chen, A., Shu-Jiun Chen, S., Kalfatovic, M. R., Wisser. K. M. (2009, November). *Information Organization in Libraries, Archives and Museums: Converging Practices and Collaboration Opportunities*. Presented at Annual Meeting of the American Society for Information Science and Technology, Vancouver, British Columbia, Canada. (Organizer and moderator of this panel.)

Hsieh-Yee, I. and Coogan, J. (2009, July). *Catching up to Google Scholar: The Retrieval Power of Academic Search Premier and Google Scholar*. Poster presented at American Library Association Conference, Chicago, Illinois.

Hsieh-Yee, I., with the CUA Scholarly Communications Project Team. (2009, January). *Digital Scholarship@CUA: Developing an Institutional Repository for CUA*. Poster presented at 1st Annual Bridging the Spectrum Symposium, Catholic University of America, Washington, D.C.

Wise, M., Cylke, K., and Hsieh-Yee, I. (2009, January). *Digital Talking Books: Meeting the Needs of the Blind and the Handicapped*. Paper presented at the Bridging the Spectrum Symposium, Catholic University of America, Washington, D.C.

Hsieh-Yee, I. (2009, January). *User Expectations of MERIC*. Presented at the Information Organization Competencies for the 21st Century Discussion Session of the 2009 Conference of the Association for Library and Information Science Education, Denver, Colorado.

Choi, Y., and Hsieh-Yee, I. (2008,November). *Subject Access for Images in an OPAC.* Annual Meeting of the American Society for Information Science and Technology, Columbus, Ohio. (Also co-organized a panel on Retrieving and Using Visual Resources: Challenges and Opportunities for Research and Education.)

Hsieh-Yee, I. (2008, June). *Educating Cataloging Professionals in a Changing Information Environment*. National Taiwan University, Taipei, Taiwan.

Vellucci, S. L., Moen, W.E., Hsieh-Yee, I., Marson, B., and Wisser, K. (2008, January) *Building a Metadata Education and Research Community through MERIC (Metadata Education and Research Information Commons): Demo and Stakeholder Input*. A panel presented at the 2008 Conference of the Association for Library and Information Science Education, Philadelphia, Pennsylvania.

Hsieh-Yee, I., Choi,Y. and Kules, B. (2007, October). *Searching for Books and Images in OPAC: Effects of LCSH, TOC and Subject Domains.* A poster presented at the American Society for Information Science and Technology Annual Meeting, Milwaukee, Wisconsin.

Hsieh-Yee, I. and Coogan, J. (2007, August) *Google Scholar vs. Academic Search Premier: A Comparative Analysis.* Presented to the Faculty and Staff of the University of the District

of Columbia.

Hsieh-Yee, I. and Coogan, J. (2007, June). *Google Scholar vs. Academic Search Premier: A Comparative Analysis*. Presented to the Washington Research Library Consortium Community, Catholic University of America, Washington, D.C.

Hsieh-Yee, I., Choi, Y., and Kules, B.. (2007, June). *What Users Need for Subject Access: Table of Contents or Subject Headings?* A poster presented at the 2007 American Library Association Annual Conference, Washington, D.C., June 2007.

Choi, Y., Hsieh-Yee, I., and Kules, B. (2007, June). *Retrieval Effectiveness of TOC and LCSH.* A paper presented at the Joint Conference on Digital Libraries 2007, Vancouver, Canada.

Vellucci, S. L., Hsieh-Yee, I., and Moen, W.E. (2007, May). *If We Build It, Will They Come? Building a Community of Practice for Metadata Stakeholders.* A poster presented at the Rutgers University Research Day, Bridgeton, New Jersey.

Hsieh-Yee, I. (2007, May). *Federated Searching: User Experience & Perceptions.* International Conference on Information Organization & Retrieval, National Taiwan University, Taipei, Taiwan.

Hsieh-Yee, I. (2007, May). *Search Performance of Google Scholar and Academic Search Premier.* International Conference on Information Organization & Retrieval, National Taiwan University, Taipei, Taiwan.

Hsieh-Yee, I. (2007, May) *MERIC: Building a Digital Commons for Metadata Education & Research.* International Conference on Information Organization & Retrieval, National Taiwan University, Taipei, Taiwan.

Hsieh-Yee, I., and Coogan, J. (2007, March/April). *A Comparative Analysis of Google Scholar and Academic Search Premier.* Poster presented at the Association of College & Research Libraries 13th National Conference, Baltimore, Maryland.

Vellucci, S. L. and Hsieh-Yee, I. (2007, March/April) *They Didn't Teach Me That in Library School! Building a Digital Teaching Commons to Enhance Metadata Teaching, Learning and Research*. On-site presentation and Webcast by Elluminate. A contributed paper presented at the Association of College & Research Libraries 13th National Conference, Baltimore, Maryland. The acceptance rate for contributed paper was 20%. This paper was one of 10 conference papers chosen for live webcast during the conference.

Moen, W., Hsieh-Yee, I. and Vellucci, S.L. (2007, January) *A DSpace Foundation for a Teaching & Research Commons: The Metadata Education and Research Information Commons.* A poster session presented at the Open Repositories Conference 2007, San Antonio, Texas.

Tang, R., Hsieh-Yee, I., and Zhang, S. (2006, November) *User Perception of MetaLib Combined Search*. Paper presented at the Annual Meeting of the American Society for Information Science and Technology, Austin, Texas, Nov. 2006.

Hsieh-Yee, I. (2006, November). *Federated Searching: User Perceptions, System Design, and Library Instructions.* Paper presented at the Annual Meeting of the American Society for Information Science and Technology, Austin, Texas. (Panel organizer, moderator, presenter).

Hsieh-Yee, I. (2006, November). *Building a Digital Teaching Commons to Enhance Teaching and Learning: The MERIC Experience and Challenges.* Paper presented at the Annual Meeting of the American Society for Information Science and Technology, Austin, Texas. (Panel organizer, moderator, presenter)

Hsieh-Yee, I. (2006, September). *Search Performance of Google Scholar and Academic Search Premier.* Paper presented at the ERIC Publishers Meeting, Washington, D.C.

Hsieh-Yee, I., Zhang, S., and Rong Tang, R. (2006, June). *User Perceptions of a Federated Search System*. Poster presented at Joint Conference on Digital Libraries, Chapel Hill, North Carolina.

Hsieh-Yee, I. and Zhang, S. (2006, June). *Preparing Users for Federated Search: Implications of a MetaLib User Perceptions Study.* Paper presented at the 2006 Ex Libris User Groups of North America Conference, Knoxville, Tennessee.

Hsieh-Yee, I. (2006, January). *MERIC Organizations and Navigation*. Paper presented at the 2006 ALISE Annual Conference, San Antonio, Texas.

Hsieh-Yee, I. (2006, January). *Metadata and Cataloging Education: Recommended Competencies.* Paper presented at the 2006 ALISE Annual Conference, San Antonio, Texas.

Hsieh-Yee, I. (2005, November). *Digital Library Evaluation: Progress & Next Steps.* Presentation at the Annual Meeting of the American Society for Information Science & Technology, Charlotte, North Carolina.

Hsieh-Yee, I. (2005, August). *Providing Access to Digital Content: Issues for DL Managers.* Presentation at MDK12 Digital Library Steering Committee Meeting, Columbia, Maryland.

Hsieh-Yee, I. (2005, April). *Enhancing Teaching and Learning: The Role of School Library Media Specialists.* Presentation at Meeting of the Baltimore County Public School System School Media Specialists, Baltimore, Maryland.

Hsieh-Yee, I. (2005, January). *Subject Access and Users: Insights & Inspirations from Marcia J. Bates.* Paper presented at the Historical Perspectives SIG, 2005 Conference of the Association for Library and Information Science Education, Boston, Massachusetts.

Hsieh-Yee, I. (2005, January). *Electronic Resource Management: Practice, Employer Expectations, & CE Interests.* Paper presented at Technical Services Education SIG, 2005 Conference of the Association for Library and Information Science Education, Boston, Massachusetts.

Hsieh-Yee, I. (2004, October). *Library Professionals for the Digital Age: Competencies & Preparation.* Paper presented at Bibliographic Access Management Team meeting, Library of Congress, Washington, D.C.

Hsieh-Yee, I. (2004, January). *Cataloging and metadata expertise for the digital era.* Presented at Preparing 21st Century Cataloging and Metadata Professionals: A Workshop for Educators and Trainers, San Diego and sponsored by ALCTS, ALISE, LC, and OCLC.

Hsieh-Yee, I. (2004, January). *Educating catalogers for the digital era.* Paper presented at the Technical Services SIG, 2004 Conference of the Association for Library and Information Science Education, San Diego.

Hsieh-Yee, I. (2003, July). *Cataloging Education for the 21st Century.* A presentation at the Library of Congress, Washington, D.C.

Hsieh-Yee, I. (2002, January) *Metadata Education and Research Priorities: A Delphi Study of Metadata Experts.* Presentation at the 2002 Conference of the Association for Library and Information Science Education, New Orleans.

Hsieh-Yee, I. (2001, November). *A Delphi Study of Metadata: Preliminary Findings.* Poster session at the 2001 Annual Meeting of the American Society for Information Science & Technology, Washington, D.C.

Hsieh-Yee, I. (2001, June). *Resources on Asian American Children: Analysis of Retrieval by Search Engines and WorldCat.* Presentation at the National Conference on Asian Pacific American Librarians, San Francisco.

Hsieh-Yee, I. (2001, January). *Delphi Study on Metadata: Project Design.* Presentation at Research Awards Session, Association for Library & Information Science Education, Washington, D.C.

Hsieh-Yee, I. (2000, May). *Web Search Behavior Research: Progress and Implications.* Presentation at the Symposium on Evaluating Library and Information Science Research, University of Wisconsin-Madison, Madison, Wisconsin.

Hsieh-Yee, I. (2000, March). *ERIC User Services: Evaluation in a Decentralized Environment.* Presentation at the National ERIC Joint Directors/Technical Meeting, Arlington, Virginia.

Hsieh-Yee, I. (2000, January). *Enhancing Learning with Web Technology.* Presentation at Faculty Conversations, Catholic University of America, Washington, D.C.

Hsieh-Yee, I. (2000, January). *From Surrogates to Objects: CUA's Approaches to Organizing Electronic Resources.* Paper presentation at the Annual Conference of the Association for Library and Information Science Education, San Antonio, Texas.

Yee, P., and Hsieh-Yee, I. (1997, November). *Individual Differences in Search Behavior on the WWW.* A poster session presented at the 38th Annual Meeting of the Psychonomic Society, Philadelphia, Pennsylvania.

Hsieh-Yee, I. (1997, April). *Research + Marketing + Preparation = Job!* Presented at the "Workshop on Resume and Interview Techniques," Special Libraries Association, Student Chapter, Catholic University of America, Washington, D.C.

Hsieh-Yee, I. (1997, February). *Creating CyberCatalogers: Education and Training.* Presentation at ALA's Midwinter Meeting, Washington, D.C.

Hsieh-Yee, I. (1997, February). *Search Tactics of Web Users in Searching for Texts, Graphics, Known Items and Subjects: A Search Simulation Study.* Presented at the Conference of the Association for Library and Information Science Education, Washington, D.C.

Hsieh-Yee, Ingrid. "Beginning Your Special Library/Information Center Career." Presented at SLA's "Career Day," Jan. 11, 1997, Catholic University of America.

Hsieh-Yee, I. (1996, September). *The Roles of Library and Information Scientists in Managing Electronic Information.* Presentation at Hamilton College, Clinton, New York.

Hsieh-Yee, I. (1996, May). *The Future of Cataloging as a Profession.* Presented at "The Cataloging Forum, Library of Congress, Washington, D.C.

Hsieh-Yee, I. (1994, October). *The Impact of the Internet on OPACs.* Presented at the Third Workshop on User Interfaces for OPACs, Library of Congress, Washington, D.C.

Reports

Hsieh-Yee, I., with Knowledge Management Competencies and Performance Action Group of the Federal Knowledge Management Initiative. "From Knowledge Management Competencies to Improved Organizational Performance." April 9, 2009.

Hsieh-Yee, I., with Knowledge Practices Action Group of the Federal Knowledge Management Initiative. "KM Practice in Government Agencies: Findings and Recommendations." April 9, 2009.

Hsieh-Yee, I. "Delphi Study on Metadata." 2001. Three quarterly reports submitted to the Association for Library and Information Science Education.

Hsieh-Yee, I. "College Students' Information Channels: Patterns of Use and Possible Factors in Channel Selection." 1995. Submitted to the Catholic University of America.

Hsieh-Yee, I. "The Information-Seeking Patterns of Scholars and Their Use of an Online Information System." 1994. Submitted to the Council on Library Resources.

Book Reviews

Review of *The Measurement and Evaluation of Library Services*, by Sharon L. Baker and F. Wilfrid Lancaster. *Information Processing and Management* 30 (1994): 450-52.

Review of *Subject Access to Films and Videos, by Sheila S. Intner and William E. Studwell; and Cataloging Unpublished Nonprint Materials*, by Verna Urbanski with Bao Chu Chang and Bernard L. Karon. *Information Processing and Management* 30 (1994): 449-50.

Review of *Automated Information Retrieval in Libraries: A Management Handbook*, by Vicki Anders. *Journal of Library and Information Science* 19 (1993): 98-100.

Review of *Full Text Databases*, by Carol Tenopir and Jung Soon Ro. *Information Processing and Management* 28 (1992): 667-68.

Review of *Descriptive Cataloging for the AACR2R And USMARC: A How-to-Do It Workbook*, by Larry Millsap and Terry Ellen Ferl. *Information Processing and Management* 28 (1992): 809-11.

Review of *MARC Manual: Understanding and Using MARC Records*, by Deborah J. Byrne. *Information Processing and Management* 28 (1992): 537-38.

Service

Professional Associations and Societies

- Library of Congress. RDA Training Program for the Profession. Co-authored with Tim Carlton. 2013-2014.
- 2014 Digital Preservation Outreach & Education Survey. Contributed to the design of the survey, 2014.
- National Digital Stewardship Alliance. Outreach Committee. 2011-2014.
- National Digital Stewardship Residency Program. Advisory Group, 2012-2013.
- FEDLINK Health Information Technology Advisory Council, 2011-2015.

- 2012 Joint Conference on Digital Libraries. Program Planning Committee, Pre-Conference Proposals Review Committee, 2012
- Catholic Research Resources Alliance. Five-Year Strategic Plan Task Force, 2011-2012
- Institute of Museum and Library Services. Grant reviewer. 2004, 2005, 2010.

- Association for Library and Information Science Education.
  * ALISE Bodan Wynar Research Paper Award Committee, 2015, 2016, 2017
  * ALISE Eugene Garfield Dissertation Award Competition, Jury, 2013, 2014
  * ALISE Research Grant Competition Committee. Chair, 2012
  * Pratt-Severn Faculty Innovation Award. Chair, 2009, 2010
  * ALISE Doctoral Poster Jury, 2012
  * "Information Organization Competencies for the 21st Century" Discussion session leader. 2009 Conference of the Association for Library and Information Science Education.
  * Assisted Technical Services SIG Convener in organizing a program, ""Building a Metadata Education and Research Community through MERIC (Metadata Education and Research Information Commons): Demo and Stakeholder Input" for the 2008 ALISE conference.
  * Association for Library Collections and Technical Services/Association for Library and Information Science Education (ALCTS/ALISE) Metadata Education and Research Information Center (MERIC) Advisory Board, Co-Chair (with Sherry Vellucci), 2005-2007. Chair, 2008-2009 (leading the effort to build MERIC, a repository and collaborative space for metadata educators, practitioners, and researchers)
  * Technical Services SIG, Convener, 2004-2005. Organized a program on "Electronic Resources Management: Current Practices, Employer Expectations, and Teaching Strategies" for the 2005 conference in Boston, Massachusetts.
  * Technical Services SIG, Convener, 2003-2004. Organized a program on "Organizing Information with Metadata: Desired Competencies and Teaching Innovations" for the 2004 conference.
  * Technical Services SIG, Convener, 1999-2000. Organized a program on "Teaching the Organization of Electronic Resources" for the 2000 conference.
  * Curriculum SIG, Co-convener (with Sibyl Moses), 1996-97. Organized a program on "Government Information Policy" for the 1997 conference.

- American Society for Information Science & Technology.
  * Reviewer, Conference program panel submissions and poster submissions, 2005, 2006, 2007, 2009, 2011, 2012, 2013, 2014, 2015, 2016, 2017
  * Nomination Committee, 2009-2011
  * Information Science Education Special Interest Group. American Society for Information Science and Technology. Chair-Elect, 2007-2008. Chair 2008-2009.
  * Committee on Information Science Education. 1999-2006.
  * Committee on Information Science Education. Organizing Committee for an orientation program for students at ASIS annual meetings, 1999-2001
  * Committee on Information Science Education. Sub-committee on Student Welfare (focusing on issues related to master's education), 1998-2001

* SIG ED. Organizing Committee for the "Seminar on Research and Career Development" for junior researchers. 1995-96 (chair), 1997-2001
* ISI Doctoral Dissertation Proposal Scholarship Jury, 1997; 2001, 2002
* Pratt-Severn Best Student Research Paper Award Jury. Chair. 1997
* 1998 Midyear Meeting (referee of contributed papers), 1997
* Organizer and moderator of the ASIS Doctoral Forum and the Doctoral Research Seminar 1994-1995
* SIG Human Computer Interaction. Chair-Elect, Chair, 1993-1995
* Doctoral Forum Award Jury, 1995
* Best Student Paper Award Jury, 1995

- American Library Association.
  * Committee on Accreditation, External Review Panelist, 2009- (site visiting team 2013-2014; site visiting team 2016-2017)
  * Association for Library Collections and Technical Services Task Force on Competencies and Education for a Career in Cataloging, member, 2008-2009
  * Facilitator for "What They Don't Teach in Library School: Competencies, Education and Employer Expectations for a Career in Cataloging," an Association for Library Collections and Technical Services Preconference, June 22, 2007 in Washington, D.C. Also a local liaison for bringing this program to the Catholic University of America.
  * Facilitator for a discussion on "Effect of Electronic Resources on Technical Services" at ALA's Midwinter Meeting held in Feb. 1997 in Washington, D.C.
  * International Relations Committee, Subcommittee Task Force for IFLA and China, 1994-1997

- Virginia Association of School Librarians. Scholarships and Awards Committee. 2010-2012

- Federal Knowledge Management Initiative, Knowledge Management Practices Action Group. Member. 2009 (leading the effort to build a knowledge management repository)
- Federal Knowledge Management Initiative, Knowledge Management Competencies & Learning Action Group. Member. 2009 (developing an action plan for helping government knowledge workers and government agencies to develop knowledge management competencies)
- National Center for Education Statistics. Technical Review Panel. 2008.
- External evaluator for a case of promotion to full professorship. University of Tennessee. 2008.
- National Information Standards Organization (NISO). Advisory Board, Revision of "IMLS Framework of Guidance for Building Good Digital Collections," 2004, 2007.
- Library of Congress, Bibliographic Control of Web Resources: A Library of Congress Action Plan. Principal Investigator of Action Item 5.1, focusing on cataloging and metadata education for students and new librarians, 2002-2003. (worked with the Association for Library Collections and Technical Services, Education Task Force)

- Chinese American Librarians Association
  * Chinese American Librarians Association Outstanding Library Leadership Award in Memory of Dr. Margaret Chang Fung, Award Committee, 2016-2017
  * Achievement Award Jury, 2000-2001
  * CALA Goal 2000 Task Force, 1997
  * Scholarship Committee, 1995, 1996-1997 (chair)
  * Board of Directors, 1994-1997
  * Publication Committee, 1993-1995
  * International Relations Committee, 1993-1996

- Sailor[SM] Assessment Advisory Group (An impact study of Sailor, Maryland's Public Information Network), 1995

- Editorial boards
  Journal of Library & Information Science. Editorial Board, 2012-
  Chinese American Librarians Association, *Occasional Papers Series*. Editorial Board, 2009-2016.
  Library Quarterly. Editorial Board, 2003-2008
  Bulletin of the Medical Library Association, 1994-97
  Newsletter editor for the Chinese American Librarians Association, 1989-92

- Referee for the following journals
  Information Processing and Management
  Journal of Digital Information
  Journal of Education for Library and Information Science
  Journal of Information Science
  Journal of Library & Information Science
  Journal of Library Metadata
  Journal of the American Society for Information Science & Technology
  Library and Information Science Research
  Library Quarterly

- Expert reviewer, "Digital Library" course, Evaluation module, University of North Carolina, Chapel Hill, 2007-2008.
- Expert reviewer, "Information Organization" course, University of Michigan, Ann Arbor. 2007.

Catholic University of America

- Academic Senate Committee on Appointments and Promotions, 2005-2008
- Academic Senate Committee on Committees and Rules, 2009-2012, 2019-2022
- Academic Senate representative (for School of Arts & Sciences), 2017-2020

- Academic Senate representative (for School of Library & Information Science) 2003-2012
- Academic Senate Library Committee, Interim Chair (2007), Member, 2008-2012
- Academic Senate Committee on Computing, 1995-2003

- President's Administrative Council, 2010-2012
- Deans' Council, 2010-2012
- Academic Leadership Group, 2010-2012
- Graduate Board, 2010-2012

- School of Arts & Sciences, Committee on Appointments and Promotions, 2015-2019
- School of Arts & Sciences, Academic Council, 2015-2016.
- School of Arts & Sciences, Ordinary Professor Group, 2013-
- Doctoral Dissertation Defense Committee, Chair, Dept. of Psychology, 2016, 2017, 2018, 2019, 2020, 2021, 2022
- Doctoral Dissertation Defense Committee, Chair, Dept. of Education, 2014, 2015, 2017, 2018, 2019
- Doctoral Dissertation Defense Committee, Chair, National Catholic School of Social Services, 2019, 2020, 2021
- Doctoral Dissertation Defense Committee, Chair, School of Nursing, 2006, 2008
- CUA Scholarly Communication Project Team, Member (2007), Chair, 2008-2009
- Dean Search Committee, 1992-1994, 1998-1999, 2002-2003, 2006-2007
- Fulbright Review Panel, 2006
- CUA Service Learning Advisory Board, 2001-2002
- CUA Faculty Conversations on Enhancing Teaching and Learning through Technology, Planning Group, 1999-2001
- CUA Initiative on Technology and Teaching, 1998-2001

Dept. of Library and Information Science

- Admissions Committee, 2007-2009, Chair 2010-2012, Member 2013-2015, Member 2018-2022
- Appointments and Promotions Committee, 1991-2022
- Student advisement, 1990-2022
- 4+1 Bachelor to Master program, Program Advisor, 2014-2022
- LIS Minor, Advisor, 2017-2022
- Curriculum Committee, 2020-21 (Member), 2021-2022 (Chair)
- Scholarship & Awards Committee, 2016-2018, 2020-21
- Comprehensive examination editor, 2020-21
- Symposium, Colloquium, Lecture Series Committee, May 2018-May 2020 (Chair)
- Symposium and Colloquium Committee, fall 2016-May 2018
- Bridging the Spectrum Symposium session moderator, 2018, 2019, 2020, 2021

- Organization of Information Core Course Outcomes Assessment, 2019, 2020
- The Information Professions in Society Core Course Outcomes Assessment, 2019, 2020
- Community Services Librarianship, Course of Study Review and Revision, 2020
- Organization of Information, Course of Study Review and Revision, 2019
- Organization of Information, Competency and Course Offerings Review, 2018-2019
- Accreditation presentation, Chair, June 2015-August 2016
- Interim Co-Chair, June 2015-August 2016.
- Blended/OWL Learning Committee, spring 2016-2018
- Technology Committee, fall 2016-2017
- Comprehensive examination editor, 2016-2017, reader (every year since 1990)
- LIS Advisory Board, 2015-2016 (chair); fall 2016- May 2018 (member)
- Committee on Planning and Assessment, 2015-2016 (chair)
- Senior Faculty Committee, 2014-2016.
- Accreditation Steering Committee, 2014-2016 (Chair, 2015-2016)
- Accreditation Students Standard Committee, co-chair, 2014-2016
- Accreditation Mission, Goals, and Objectives Standard Committee, co-chair, 2014-2016
- Accreditation Curriculum Standard, member 2014-2-16
- Accreditation Administration and Finance Standard, member 2014-2016
- Cultural Heritage Information Management Project (IMLS-funded), Co-PI, 2012-2015
- Cultural Heritage Information Management Forum (scheduled for June 2015), Co-Organizer, 2013-2015
- Health Information Technology Interim Review Committee, 2015 (chair)
- Health Sciences Librarianship Advisory Group, 2015- (chair)
- Comprehensive examination editors, 2013-2014, 2016-2017
- National Digital Stewardship Alliance liaison, 2011-2014
- Advisory Board, Chair 2010-2012
- Academic Honesty Committee, Chair, 2008-2012
- Blended Learning Committee, 2010-2012
- Colloquium Committee, 2010-2012
- Comprehensive Examination Administration, 2010-2012
- Cultural Heritage Information Management Advisory Committee, 2010-2012 (chair), 2013-
- Curriculum Committee, 1991-2003, 2007-2009, Chair 2010-2012, member 2013-
- Curriculum Subcommittee on Comprehensive Examination, Chair 2009-2012
- Health Information Technology Advisory Board, Chair 2010-2012. Member 2013-
- Health Sciences Advisory Committee, 2009, Chair 2010-2012. Member 2013-
- HIT Expert Forum, Chair 2012. Member 2013-2015
- Health Information Technology Student Group Advisor, 2011-2012
- State Council for Higher Education of Virginia, SLIS Representative, 2010-2012
- Symposium Planning Committee, 2010-2012
- Website Management Team, Chair, 2010-2012
- Urban School Librarianship Project (IMLS-Funded), PI, 2007-2011 (chair, 2010-11)

- Failing Grades Committee, 1995-1997 (chair), 2000-2001 (chair), 2004-2005 (chair), 2007 (chair)-2011
- Faculty Search Committee, 1994-1998, 2002-2004, 2006 (chair), Fall 2007-2009, Chair fall 2009-2012
- Recruitment Committee, Chair 2010-2012
- Strategic Planning Committee, Chair 2010-2012
- Technology Committee, 2010-2012
- Accreditation Advisory Committee, 2007-2009
- Accreditation Coordinating Committee, 2007-2009
- Accreditation Steering Committee, 2007-2009
- SLIS Advisory Group, 2007-2009
- Accreditation Curriculum Standard Committee, Co-chair, 2007-2009
- Accreditation Faculty Standard Committee, Co-chair, 2007-2009
- LSC 551 Information Organization Review Team, Co-chair, 2008-2009, 2015-2016.
- Curriculum Subcommittee on Portfolios, 2009
- LSC 555 Information Systems in Libraries and Information Centers Review Team, contributor, 2008-2009
- Redesign of LSC 730 Use and Users of Libraries and Information. 2009-
- Development of a metadata institute that was taught as LSC 715 Organization of Internet Resources in 2008. The institute is being revised and will be offered in 2010 under a new course title.
- Development of lesson plans, assignments, and evaluation rubrics for LSC 606, Cataloging and Classification, for the School's NCATE accreditation. 2008
- Howard and Mathilde Rovelstad Scholarship Committee, Chair, 2004-2007
- Assistant Dean Search Committee, Chair, Fall 2007
- Liaison to the Association for Library Collections and Technical Services to bring its preconference program, Cataloging Education and Employer Expectations, to CUA during the 2007 American Library Association Annual Meeting in Washington, D.C.
- Organizer of the colloquium presentation and reception for Tamar Sadeh of Ex Libris on PRIMO June 2007
- Practicum review and design (work with potential supervisors, such as the American Indian Museum internship description revision) 2006-
- Comprehensive examinations (edits, proctoring, and grading), 1990-
- SLIS Web site redesign: Comments and suggestions. Fall 2007
- Conducted surveys of current students and alumni in preparation for the 2005 re-accreditation, 2004-2005
- Technology Committee, 1992-1999 (chair, 1996-1998), 2002-2003 (member)
- Colloquia Committee 1997-1999, 2002-2003.
- Advisor of the CUA Student Chapter of the American Society for Information Science and Technology, 2002-2003
- Visiting Professor Search Committee, 1999, 2000, 2001
- Leader, Participation in the CORC experiment, 1999-2000
- Advisor of the Special Libraries Association Student Chapter, 1993-1999; the group was recognized for outstanding leadership by SLA in 1999.

- COA planning Committee, Task Force on Electronic Presentation of SLIS Reports (team leader) 1997-1998
- COA Planning Committee, Subcommittee on Technology 1996-1998
- NLM practicum coordinator, 1997-1998
- Computer Literacy Workshops: Assisted with the development and evaluation of the workshops, 1996-1998
- Leader, Participation in the InterCat project, 1995-1997

APPENDIX 0001A

Select by Specification Number or View full list (almost 2000 items)

The full list contains almost 2000 items and may take some time to generate.

Spec	ETSI No./ Reference	Ed.	Version /Achieved Date	Title
23.002	TS 123 002 RTS/TSGS-0223002va20		10.2.0 2011-03-29	Digital cellular telecommunications system (Phase 2+); Universal Mobile Telecommunications System (UMTS); LTE;Network architecture(3GPP TS 23.002 version 10.2.0 Release 10)
23.002	TS 123 002 RTS/TSGS-0223002va30		10.3.0 2011-10-12	Digital cellular telecommunications system (Phase 2+); Universal Mobile Telecommunications System (UMTS); LTE;Network architecture(3GPP TS 23.002 version 10.3.0 Release 10)
23.002	TS 123 002 RTS/TSGS-0223002va40		10.4.0 2012-01-09	Digital cellular telecommunications system (Phase 2+); Universal Mobile Telecommunications System (UMTS); LTE;Network architecture(3GPP TS 23.002 version 10.4.0 Release 10)
23.002	TS 123 002 RTS/TSGS-0223002va50		10.5.0 2013-01-10	Digital cellular telecommunications system (Phase 2+); Universal Mobile Telecommunications System (UMTS); LTE;Network architecture(3GPP TS 23.002 version 10.5.0 Release 10)
23.002	TS 123 002 RTS/TSGS-0223002va60		10.6.0 2014-07-04	Digital cellular telecommunications system (Phase 2+); Universal Mobile Telecommunications System (UMTS); LTE;Network architecture(3GPP TS 23.002 version 10.6.0 Release 10)
23.002	TS 123 002 RTS/TSGS-0223002vb40		11.4.0 2012-11-13	Digital cellular telecommunications system (Phase 2+); Universal Mobile Telecommunications System (UMTS); LTE;Network architecture(3GPP TS 23.002 version 11.4.0 Release 11)
23.002	TS 123 002 RTS/TSGS-0223002vb50		11.5.0 2013-01-10	Digital cellular telecommunications system (Phase 2+); Universal Mobile Telecommunications System (UMTS); LTE;Network architecture(3GPP TS 23.002 version 11.5.0 Release 11)
23.002	TS 123 002 RTS/TSGS-0223002vb60		11.6.0 2013-06-27	Digital cellular telecommunications system (Phase 2+); Universal Mobile Telecommunications System (UMTS); LTE;Network architecture(3GPP TS 23.002 version 11.6.0 Release 11)
23.002	TS 123 002 RTS/TSGS-0223002vc50		12.5.0 2014-10-15	Digital cellular telecommunications system (Phase 2+); Universal Mobile Telecommunications System (UMTS); LTE;Network architecture(3GPP TS 23.002 version 12.5.0 Release 12)
23.002	TS 123 002 RTS/TSGS-0223002vc60		12.6.0 2015-01-08	Digital cellular telecommunications system (Phase 2+); Universal Mobile Telecommunications System (UMTS); LTE;Network architecture(3GPP TS 23.002 version 12.6.0 Release 12)
23.002	TS 123 002 RTS/TSGS-0223002vc70		12.7.0 2015-07-17	Digital cellular telecommunications system (Phase 2+); Universal Mobile Telecommunications System (UMTS); LTE;Network architecture(3GPP TS 23.002 version 12.7.0 Release 12)
23.002	TS 123 002 RTS/TSGS-0223002vd40		13.4.0 2016-03-08	Digital cellular telecommunications system (Phase 2+) (GSM); Universal Mobile Telecommunications System (UMTS); LTE;Network architecture(3GPP TS 23.002 version 13.4.0 Release 13)
23.002	TS 123 002 RTS/TSGS-0223002vd50		13.5.0 2016-04-12	Digital cellular telecommunications system (Phase 2+) (GSM); Universal Mobile Telecommunications System (UMTS); LTE;Network architecture(3GPP TS 23.002 version 13.5.0 Release 13)
23.002	TS 123 002 RTS/TSGS-0223002vd60		13.6.0 2016-07-28	Digital cellular telecommunications system (Phase 2+) (GSM); Universal Mobile Telecommunications System (UMTS); LTE;Network architecture(3GPP

				TS 23.002 version 13.6.0 Release 13)
23.002	TS 123 002 RTS/TSGS-0223002vd70		13.7.0 2016-10-05	Digital cellular telecommunications system (Phase 2+) (GSM); Universal Mobile Telecommunications System (UMTS); LTE;Network architecture(3GPP TS 23.002 version 13.7.0 Release 13)
23.002	TS 123 002 RTS/TSGS-0223002ve10		14.1.0 2017-05-10	Digital cellular telecommunications system (Phase 2+) (GSM); Universal Mobile Telecommunications System (UMTS); LTE;Network architecture(3GPP TS 23.002 version 14.1.0 Release 14)
23.002	TS 123 002 RTS/TSGS-0223002vf00		15.0.0 2018-07-26	Digital cellular telecommunications system (Phase 2+) (GSM); Universal Mobile Telecommunications System (UMTS); LTE;Network architecture(3GPP TS 23.002 version 15.0.0 Release 15)
23.002	TS 123 002 RTS/TSGS-0223002vg00		16.0.0 2020-07-24	Digital cellular telecommunications system (Phase 2+) (GSM); Universal Mobile Telecommunications System (UMTS); LTE;Network architecture(3GPP TS 23.002 version 16.0.0 Release 16)
23.002	TS 123 002 RTS/TSGS-0223002vh00		17.0.0 2022-05-10	Digital cellular telecommunications system (Phase 2+) (GSM); Universal Mobile Telecommunications System (UMTS); LTE;Network architecture(3GPP TS 23.002 version 17.0.0 Release 17)
23.002	TS 123 002 DTS/TSGS-0223002U		3.2.0 2000-02-01	Digital cellular telecommunications system (Phase 2+) (GSM); Universal Mobile Telecommunications System (UMTS);Network architecture(3G TS 23.002 version 3.2.0 Release 1999)
23.002	TS 123 002 RTS/TSGS-0223002UR1		3.3.0 2000-05-17	Digital cellular telecommunications system (Phase 2+) (GSM); Universal Mobile Telecommunications System (UMTS);Network architecture(3G TS 23.002 version 3.3.0 Release 1999)
23.002	TS 123 002 RTS/TSGS-0223002UR2		3.4.0 2001-02-13	Digital cellular telecommunications system (Phase 2+) (GSM); Universal Mobile Telecommunications System (UMTS);Network architecture(3GPP TS 23.002 version 3.4.0 Release 1999)
23.002	TS 123 002 RTS/TSGS-0223002UR3		3.5.0 2002-01-11	Digital cellular telecommunications system (Phase 2+) (GSM); Universal Mobile Telecommunications System (UMTS);Network architecture(3GPP TS 23.002 version 3.5.0 Release 1999)
23.002	TS 123 002 RTS/TSGS-0223002v360		3.6.0 2002-10-03	Digital cellular telecommunications system (Phase 2+); Universal Mobile Telecommunications System (UMTS);Network Architecture(3GPP TS 23.002 version 3.6.0 Release 1999)
23.002	TS 123 002 RTS/TSGS-0223002Uv4		4.2.0 2001-04-12	Digital cellular telecommunications system (Phase 2+) (GSM); Universal Mobile Telecommunications System (UMTS);Network architecture(3GPP TS 23.002 version 4.2.0 Release 4)
23.002	TS 123 002 RTS/TSGS-0223002Uv4R1		4.3.0 2001-07-13	Digital cellular telecommunications system (Phase 2+) (GSM); Universal Mobile Telecommunications System (UMTS);Network architecture(3GPP TS 23.002 version 4.3.0 Release 4)
23.002	TS 123 002 RTS/TSGS-0223002Uv4R2		4.4.0 2002-01-11	Digital cellular telecommunications system (Phase 2+) (GSM); Universal Mobile Telecommunications System (UMTS);Network architecture(3GPP TS 23.002 version 4.4.0 Release 4)
23.002	TS 123 002 RTS/TSGS-0223002v450		4.5.0 2002-10-03	Digital cellular telecommunications system (Phase 2+); Universal Mobile Telecommunications System (UMTS);Network Architecture(3GPP TS 23.002 version 4.5.0 Release 4)
23.002	TS 123 002 RTS/TSGS-0223002v460		4.6.0 2003-01-09	Digital cellular telecommunications system (Phase 2+); Universal Mobile Telecommunications System (UMTS);Network architecture(3GPP TS 23.002 version 4.6.0 Release 4)
23.002	TS 123 002 RTS/TSGS-0223002v470		4.7.0 2003-04-07	Digital cellular telecommunications system (Phase 2+); Universal Mobile Telecommunications System (UMTS);Network architecture(3GPP TS 23.002 version 4.7.0 Release 4)

23.002	TS 123 002 RTS/TSGS-0223002v480		4.8.0 2003-07-01	Digital cellular telecommunications system (Phase 2+); Universal Mobile Telecommunications System (UMTS);Network architecture(3GPP TS 23.002 version 4.8.0 Release 4)
23.002	TS 123 002 RTS/TSGS-0223002v5a0		5.10.0 2003-04-07	Digital cellular telecommunications system (Phase 2+); Universal Mobile Telecommunications System (UMTS);Network architecture(3GPP TS 23.002 version 5.10.0 Release 5)
23.002	TS 123 002 RTS/TSGS-0223002v5b0		5.11.0 2003-07-01	Digital cellular telecommunications system (Phase 2+); Universal Mobile Telecommunications System (UMTS);Network architecture(3GPP TS 23.002 version 5.11.0 Release 5)
23.002	TS 123 002 RTS/TSGS-0223002v5c0		5.12.0 2003-10-06	Digital cellular telecommunications system (Phase 2+); Universal Mobile Telecommunications System (UMTS);Network architecture(3GPP TS 23.002 version 5.12.0 Release 5)
23.002	TS 123 002 RTS/TSGS-0223002Uv5		5.6.0 2002-04-12	Digital cellular telecommunications system (Phase 2+) (GSM); Universal Mobile Telecommunications System (UMTS);Network architecture(3GPP TS 23.002 version 5.6.0 Release 5)
23.002	TS 123 002 RTS/TSGS-0223002v570		5.7.0 2002-06-19	Digital cellular telecommunications system (Phase 2+); Universal Mobile Telecommunications System (UMTS);Network Architecture(3GPP TS 23.002 version 5.7.0 Release 5)
23.002	TS 123 002 RTS/TSGS-0223002v580		5.8.0 2002-10-03	Digital cellular telecommunications system (Phase 2+); Universal Mobile Telecommunications System (UMTS);Network Architecture(3GPP TS 23.002 version 5.8.0 Release 5)
23.002	TS 123 002 RTS/TSGS-0223002v590		5.9.0 2003-01-09	Digital cellular telecommunications system (Phase 2+); Universal Mobile Telecommunications System (UMTS);Network architecture(3GPP TS 23.002 version 5.9.0 Release 5)
23.002	TS 123 002 RTS/TSGS-0223002v6a0		6.10.0 2006-01-06	Digital cellular telecommunications system (Phase 2+); Universal Mobile Telecommunications System (UMTS);Network architecture(3GPP TS 23.002 version 6.10.0 Release 6)
23.002	TS 123 002 RTS/TSGS-0223002v660		6.6.0 2005-01-14	Digital cellular telecommunications system (Phase 2+); Universal Mobile Telecommunications System (UMTS);Network architecture(3GPP TS 23.002 version 6.6.0 Release 6)
23.002	TS 123 002 RTS/TSGS-0223002v670		6.7.0 2005-04-06	Digital cellular telecommunications system (Phase 2+); Universal Mobile Telecommunications System (UMTS);Network architecture(3GPP TS 23.002 version 6.7.0 Release 6)
23.002	TS 123 002 RTS/TSGS-0223002v680		6.8.0 2005-08-02	Digital cellular telecommunications system (Phase 2+); Universal Mobile Telecommunications System (UMTS);Network architecture(3GPP TS 23.002 version 6.8.0 Release 6)
23.002	TS 123 002 RTS/TSGS-0223002v690		6.9.0 2005-10-07	Digital cellular telecommunications system (Phase 2+); Universal Mobile Telecommunications System (UMTS);Network architecture(3GPP TS 23.002 version 6.9.0 Release 6)
23.002	TS 123 002 RTS/TSGS-0223002v700		7.0.0 2006-01-27	Digital cellular telecommunications system (Phase 2+); Universal Mobile Telecommunications System (UMTS);Network architecture(3GPP TS 23.002 version 7.0.0 Release 7)
23.002	TS 123 002 RTS/TSGS-0223002v710		7.1.0 2006-05-15	Digital cellular telecommunications system (Phase 2+); Universal Mobile Telecommunications System (UMTS);Network architecture(3GPP TS 23.002 version 7.1.0 Release 7)
23.002	TS 123 002 RTS/TSGS-0223002v720		7.2.0 2007-07-18	Digital cellular telecommunications system (Phase 2+); Universal Mobile Telecommunications System (UMTS);Network architecture(3GPP TS 23.002 version 7.2.0 Release 7)
23.002	TS 123 002		7.3.0	Digital cellular telecommunications system (Phase

	RTS/TSGS-0223002v730		2007-10-08	2+); Universal Mobile Telecommunications System (UMTS);Network architecture(3GPP TS 23.002 version 7.3.0 Release 7)
23.002	TS_123 002 RTS/TSGS-0223002v731	7.3.1	2007-10-26	Digital cellular telecommunications system (Phase 2+); Universal Mobile Telecommunications System (UMTS);Network architecture(3GPP TS 23.002 version 7.3.1 Release 7)
23.002	TS_123 002 RTS/TSGS-0223002v740	7.4.0	2008-01-29	Digital cellular telecommunications system (Phase 2+); Universal Mobile Telecommunications System (UMTS);Network architecture(3GPP TS 23.002 version 7.4.0 Release 7)
23.002	TS_123 002 RTS/TSGS-0223002v750	7.5.0	2008-10-07	Digital cellular telecommunications system (Phase 2+); Universal Mobile Telecommunications System (UMTS);Network architecture(3GPP TS 23.002 version 7.5.0 Release 7)
23.002	TS_123 002 RTS/TSGS-0223002v760	7.6.0	2009-01-09	Digital cellular telecommunications system (Phase 2+); Universal Mobile Telecommunications System (UMTS); LTE;Network architecture(3GPP TS 23.002 version 7.6.0 Release 7)
23.002	TS_123 002 RTS/TSGS-0223002v811	8.1.1	2008-01-29	Digital cellular telecommunications system (Phase 2+); Universal Mobile Telecommunications System (UMTS);Network architecture(3GPP TS 23.002 version 8.1.1 Release 8)
23.002	TS_123 002 RTS/TSGS-0223002v820	8.2.0	2008-01-29	Digital cellular telecommunications system (Phase 2+); Universal Mobile Telecommunications System (UMTS);Network architecture(3GPP TS 23.002 version 8.2.0 Release 8)
23.002	TS_123 002 RTS/TSGS-0223002v830	8.3.0	2008-10-07	Digital cellular telecommunications system (Phase 2+); Universal Mobile Telecommunications System (UMTS);Network architecture(3GPP TS 23.002 version 8.3.0 Release 8)
23.002	TS_123 002 RTS/TSGS-0223002v840	8.4.0	2009-01-09	Digital cellular telecommunications system (Phase 2+); Universal Mobile Telecommunications System (UMTS); LTE;Network architecture(3GPP TS 23.002 version 8.4.0 Release 8)
23.002	TS_123 002 RTS/TSGS-0223002v850	8.5.0	2009-06-17	Digital cellular telecommunications system (Phase 2+); Universal Mobile Telecommunications System (UMTS); LTE;Network architecture(3GPP TS 23.002 version 8.5.0 Release 8)
23.002	TS_123 002 RTS/TSGS-0223002v860	8.6.0	2009-10-08	Digital cellular telecommunications system (Phase 2+); Universal Mobile Telecommunications System (UMTS); LTE;Network architecture(3GPP TS 23.002 version 8.6.0 Release 8)
23.002	TS_123 002 RTS/TSGS-0223002v870	8.7.0	2011-01-11	Digital cellular telecommunications system (Phase 2+); Universal Mobile Telecommunications System (UMTS); LTE;Network architecture(3GPP TS 23.002 version 8.7.0 Release 8)
23.002	TS_123 002 RTS/TSGS-0223002v920	9.2.0	2010-01-08	Digital cellular telecommunications system (Phase 2+); Universal Mobile Telecommunications System (UMTS); LTE;Network architecture(3GPP TS 23.002 version 9.2.0 Release 9)
23.002	TS_123 002 RTS/TSGS-0223002v930	9.3.0	2010-06-22	Digital cellular telecommunications system (Phase 2+); Universal Mobile Telecommunications System (UMTS); LTE;Network architecture(3GPP TS 23.002 version 9.3.0 Release 9)
23.002	TS_123 002 RTS/TSGS-0223002v940	9.4.0	2010-10-11	Digital cellular telecommunications system (Phase 2+); Universal Mobile Telecommunications System (UMTS); LTE;Network architecture(3GPP TS 23.002 version 9.4.0 Release 9)
23.002	TS_123 002 RTS/TSGS-0223002v950	9.5.0	2011-01-11	Digital cellular telecommunications system (Phase 2+); Universal Mobile Telecommunications System (UMTS); LTE;Network architecture(3GPP TS 23.002 version 9.5.0 Release 9)
23.002	TS_123 002 RTS/TSGS-0223002v960	9.6.0	2011-10-12	Digital cellular telecommunications system (Phase 2+); Universal Mobile Telecommunications System

				(UMTS); LTE;Network architecture(3GPP TS 23.002 version 9.6.0 Release 9)

Any comments or problems with this application? Please let us know...

APPENDIX 0001B

portal.etsi.org/webapp/WorkProgram/SimpleSearch/QueryForm.asp

2023-02-10

Work Programme

Version 2.3.3

Simple Search | Advanced Search | Pre-Defined Reports | Help

To find out which is the National Standards Organization for your country

click here

Search | Clear All

ETSI Doc. Number ?

Type

EN - European Standard (Telecommunications series)
ES - ETSI Standard
EG - ETSI Guide

Number

All Versions

Current Status ?

Published
Approval Stage
Drafting Stage
New Work Item
Withdrawal stage
Withdrawn

Achieved Status Since ?

Day Month Year

Include Items That Have Moved On

Report Type ?

Summary List
Work Item Plan
Progress Report

Display ?

10 Items per Page

Technical Body ?

3GPP - Third Generation Partnership Project
ARF - Augmented Reality Framework
ATTM - Access, Terminals, Transmission and Multiplexing
BOARD - Board

Include Non-Active TBs

Search | Clear All

ETSI Documentation Service | Distributors | editHelp! | Join ETSI

Any comments or problems with this application? Please let us know...

2023-02-10

Work Programme

Version 2.3.3

Simple Search | Advanced Search | Pre-Defined Reports | Help

To find out which is the National Standards Organization for your country

click here

Search Clear All

ETSI Doc. Number ?

Type

EN - European Standard (Telecommunications series)
ES - ETSI Standard
EG - ETSI Guide

Number

All Versions

Current Status ?

Published
Approval Stage
Drafting Stage
New Work Item
Withdrawal stage
Withdrawn

Achieved Status Since ?

Day Month Year

Include Items That Have Moved On

Report Type ?

Summary List
Work Item Plan
Progress Report

Display ?

10 Items per Page

Technical Body ?

3GPP - Third Generation Partnership Project
ARF - Augmented Reality Framework
ATTM - Access, Terminals, Transmission and Multiplexing
BOARD - Board

Include Non-Active TBs

Search Clear All

ETSI Documentation Service | Distributors | editHelp! | Join ETSI

Any comments or problems with this application? Please let us know...

Microsoft - Exhibit 1012
Microsoft v. Lemko- IPR2023-00531
Page 51 of 203

https://web.archive.org/web/20060504094528/http://webapp.etsi.org/WorkProgram/SimpleSearch/QueryForm.asp 150%
http://webapp.etsi.org/WorkProgram/SimpleSearch/QueryForm.asp Go
100 captures
7 Apr 2000 - 10 Oct 2022
FEB MAY JUN
04
2005 2006 2013
About this capture

2006-05-04

Work Programme

Version 2.1

Simple Search | Advanced Search | Pre-Defined Reports | 3GPP Reports | Help

Search Clear All

ETSI Doc. Number

Type

EN - European Standard (Telecommunications series)
ES - ETSI Standard
EG - ETSI Guide

Number

Current Status

Published
Approval Stage
Drafting Stage
New Work Item
Withdrawn
Historical

Achieved Status Since

Day Month Year

Include Items That Have Moved On

Report Type

Summary List
Work Item Plan
Progress Report

Display

10 Items per Page

Technical Body

APPENDIX 0001C

2023-02-10 **Work Programme** Version 2.3.3

Simple Search | Advanced Search | Pre-Defined Reports | Help

Work Items with ETSI Document Number of '123002' of Type 'TS'

View As Work Item Plan | View As Work Item Progress Report

Found 63 Items...
Displaying items 1 to 10 ...

Next Page >>

	IDENTIFICATION	TITLE	STATUS
1 FINALIZED	Doc. Nb. TS 123 002 Ver. 17.0.0 Ref. RTS/TSGS-0223002vh00 Technical Body: 3GPP SA 2 Details and Download	**Digital cellular telecommunications system (Phase 2+) (GSM); Universal Mobile Telecommunications System (UMTS); LTE; Network architecture (3GPP TS 23.002 version 17.0.0 Release 17)** Network architecture	Published Current Status: Publication (2022-05-10)
2 FINALIZED	Doc. Nb. TS 123 002 Ver. 16.0.0 Ref. RTS/TSGS-0223002vg00 Technical Body: 3GPP SA 2 Details and Download	**Digital cellular telecommunications system (Phase 2+) (GSM); Universal Mobile Telecommunications System (UMTS); LTE; Network architecture (3GPP TS 23.002 version 16.0.0 Release 16)** Network architecture	Published Current Status: Publication (2020-07-24)
3 FINALIZED	Doc. Nb. TS 123 002 Ver. 15.0.0 Ref. RTS/TSGS-0223002vf00 Technical Body: 3GPP SA 2 Details and Download	**Digital cellular telecommunications system (Phase 2+) (GSM); Universal Mobile Telecommunications System (UMTS); LTE; Network architecture (3GPP TS 23.002 version 15.0.0 Release 15)** Network architecture	Published Current Status: Publication (2018-07-26)
4 FINALIZED	Doc. Nb. TS 123 002 Ver. 14.1.0 Ref. RTS/TSGS-0223002ve10 Technical Body: 3GPP SA 2 Details and Download	**Digital cellular telecommunications system (Phase 2+) (GSM); Universal Mobile Telecommunications System (UMTS); LTE; Network architecture (3GPP TS 23.002 version 14.1.0 Release 14)** Network architecture	Published Current Status: Publication (2017-05-10)
5 FINALIZED	Doc. Nb. TS 123 002 Ver. 13.7.0 Ref. RTS/TSGS-0223002vd70 Technical Body: 3GPP SA 2 Details and Download	**Digital cellular telecommunications system (Phase 2+) (GSM); Universal Mobile Telecommunications System (UMTS); LTE; Network architecture (3GPP TS 23.002 version 13.7.0 Release 13)** Network architecture	Published Current Status: Publication (2016-10-05)
6 FINALIZED	Doc. Nb. TS 123 002 Ver. 13.6.0 Ref. RTS/TSGS-0223002vd60 Technical Body: 3GPP SA 2 Details and Download	**Digital cellular telecommunications system (Phase 2+) (GSM); Universal Mobile Telecommunications System (UMTS); LTE; Network architecture (3GPP TS 23.002 version 13.6.0 Release 13)** Network architecture	Published Current Status: Publication (2016-07-28)
7 FINALIZED	Doc. Nb. TS 123 002 Ver. 13.5.0 Ref. RTS/TSGS-0223002vd50 Technical Body: 3GPP SA 2 Details and Download	**Digital cellular telecommunications system (Phase 2+) (GSM); Universal Mobile Telecommunications System (UMTS); LTE; Network architecture (3GPP TS 23.002 version 13.5.0 Release 13)** Network architecture	Published Current Status: Publication (2016-04-12)
8 FINALIZED	Doc. Nb. TS 123 002 Ver. 13.4.0 Ref. RTS/TSGS-0223002vd40 Technical Body: 3GPP SA 2 Details and Download	**Digital cellular telecommunications system (Phase 2+) (GSM); Universal Mobile Telecommunications System (UMTS); LTE; Network architecture (3GPP TS 23.002 version 13.4.0 Release 13)** Network architecture	Published Current Status: Publication (2016-03-08)
9 FINALIZED	Doc. Nb. TS 123 002 Ver. 12.7.0 Ref. RTS/TSGS-0223002vc70	**Digital cellular telecommunications system (Phase 2+); Universal Mobile**	Published Current Status:

	Technical Body: 3GPP SA 2 Details and Download	**Telecommunications System (UMTS); LTE; Network architecture** **(3GPP TS 23.002 version 12.7.0 Release 12)** Network architecture	Publication (2015-07-17)
10 FINALIZED	Doc. Nb. TS 123 002 Ver. **12.6.0** Ref. **RTS/TSGS-0223002vc60** Technical Body: 3GPP SA 2 Details and Download	**Digital cellular telecommunications system (Phase 2+); Universal Mobile Telecommunications System (UMTS); LTE; Network architecture** **(3GPP TS 23.002 version 12.6.0 Release 12)** Network architecture	**Published** Current Status: Publication (2015-01-08)

Found 63 Items...
Displaying items **1** to **10** ...

Next Page >>

Display 10 **Items/Page**

Display the 63 Items On One Page

New Query

Any comments or problems with this application? Please let us know...

portal.etsi.org/webapp/WorkProgram/Frame_WorkItemList.asp?qSORT=HIGHVERSION&qETSI_ALL=TRUE&SearchPage=TRUE&qETSI_STANDARD_TYPE=%27TS%2...

<< Prev Page | Displaying items **31** to **40** ... | Next Page >>

	IDENTIFICATION	TITLE	STATUS
31 FINALIZED	Doc. Nb. TS 123 002 Ver. **8.1.1** Ref. **RTS/TSGS-0223002v811** Technical Body: 3GPP SA 2 Details and Download	**Digital cellular telecommunications system (Phase 2+); Universal Mobile Telecommunications System (UMTS); Network architecture (3GPP TS 23.002 version 8.1.1 Release 8)** Network architecture	Published Current Status: Publication (2008-01-29)
32 FINALIZED	Doc. Nb. TS 123 002 Ver. **7.6.0** Ref. **RTS/TSGS-0223002v760** Technical Body: 3GPP SA 2 Details and Download	**Digital cellular telecommunications system (Phase 2+); Universal Mobile Telecommunications System (UMTS); LTE; Network architecture (3GPP TS 23.002 version 7.6.0 Release 7)** Network architecture	Published Current Status: Publication (2009-01-09)
33 FINALIZED	Doc. Nb. TS 123 002 Ver. **7.5.0** Ref. **RTS/TSGS-0223002v750** Technical Body: 3GPP SA 2 Details and Download	**Digital cellular telecommunications system (Phase 2+); Universal Mobile Telecommunications System (UMTS); Network architecture (3GPP TS 23.002 version 7.5.0 Release 7)** Network architecture	Published Current Status: Publication (2008-10-07)
34 FINALIZED	Doc. Nb. TS 123 002 Ver. **7.4.0** Ref. **RTS/TSGS-0223002v740** Technical Body: 3GPP SA 2 Details and Download	**Digital cellular telecommunications system (Phase 2+); Universal Mobile Telecommunications System (UMTS); Network architecture (3GPP TS 23.002 version 7.4.0 Release 7)** Network architecture	Published Current Status: Publication (2008-01-29)
35 FINALIZED	Doc. Nb. TS 123 002 Ver. **7.3.1** Ref. **RTS/TSGS-0223002v731** Technical Body: 3GPP SA 2 Details and Download	**Digital cellular telecommunications system (Phase 2+); Universal Mobile Telecommunications System (UMTS); Network architecture (3GPP TS 23.002 version 7.3.1 Release 7)** Network architecture	Published Current Status: Publication (2007-10-26)
36 FINALIZED	Doc. Nb. TS 123 002 Ver. **7.3.0** Ref. **RTS/TSGS-0223002v730** Technical Body: 3GPP SA 2 Details and Download	**Digital cellular telecommunications system (Phase 2+); Universal Mobile Telecommunications System (UMTS); Network architecture (3GPP TS 23.002 version 7.3.0 Release 7)** Network architecture	Published Current Status: Publication (2007-10-08)
37 FINALIZED	Doc. Nb. TS 123 002 Ver. **7.2.0** Ref. **RTS/TSGS-0223002v720** Technical Body: 3GPP SA 2 Details and Download	**Digital cellular telecommunications system (Phase 2+); Universal Mobile Telecommunications System (UMTS); Network architecture (3GPP TS 23.002 version 7.2.0 Release 7)** Network architecture	Published Current Status: Publication (2007-07-18)
38 FINALIZED	Doc. Nb. TS 123 002 Ver. **7.1.0** Ref. **RTS/TSGS-0223002v710** Technical Body: 3GPP SA 2 Details and Download	**Digital cellular telecommunications system (Phase 2+); Universal Mobile Telecommunications System (UMTS); Network architecture (3GPP TS 23.002 version 7.1.0 Release 7)** Network architecture	Published Current Status: Publication (2006-05-15)
39 FINALIZED	Doc. Nb. TS 123 002 Ver. **7.0.0** Ref. **RTS/TSGS-0223002v700** Technical Body: 3GPP SA 2 Details and Download	**Digital cellular telecommunications system (Phase 2+); Universal Mobile Telecommunications System (UMTS); Network architecture (3GPP TS 23.002 version 7.0.0 Release 7)** Network architecture	Published Current Status: Publication (2006-01-27)
40 FINALIZED	Doc. Nb. TS 123 002 Ver. **6.10.0** Ref. **RTS/TSGS-0223002v6a0** Technical Body: 3GPP SA 2 Details and Download	**Digital cellular telecommunications system (Phase 2+); Universal Mobile Telecommunications System (UMTS); Network architecture (3GPP TS 23.002 version 6.10.0 Release 6)** Network architecture	Published Current Status: Publication (2006-01-06)

2023-02-10 Work Programme Version 2.3.3

Simple Search | Advanced Search | Pre-Defined Reports | Help

Work Items with ETSI Document Number of '123002' of Type 'TS'

View As Work Item Plan | View As Work Item Progress Report

Found 63 Items...
Displaying items 1 to 10 ...

Next Page >>

	IDENTIFICATION	TITLE	STATUS
1 FINALIZED	Doc. Nb. TS 123 002 Ver. 17.0.0 Ref. RTS/TSGS-0223002vh00 Technical Body: 3GPP SA 2 Details and Download	**Digital cellular telecommunications system (Phase 2+) (GSM); Universal Mobile Telecommunications System (UMTS); LTE; Network architecture (3GPP TS 23.002 version 17.0.0 Release 17)** Network architecture	Published Current Status: Publication (2022-05-10)
2 FINALIZED	Doc. Nb. TS 123 002 Ver. 16.0.0 Ref. RTS/TSGS-0223002vg00 Technical Body: 3GPP SA 2 Details and Download	**Digital cellular telecommunications system (Phase 2+) (GSM); Universal Mobile Telecommunications System (UMTS); LTE; Network architecture (3GPP TS 23.002 version 16.0.0 Release 16)** Network architecture	Published Current Status: Publication (2020-07-24)
3 FINALIZED	Doc. Nb. TS 123 002 Ver. 15.0.0 Ref. RTS/TSGS-0223002vf00 Technical Body: 3GPP SA 2 Details and Download	**Digital cellular telecommunications system (Phase 2+) (GSM); Universal Mobile Telecommunications System (UMTS); LTE; Network architecture (3GPP TS 23.002 version 15.0.0 Release 15)** Network architecture	Published Current Status: Publication (2018-07-26)
4 FINALIZED	Doc. Nb. TS 123 002 Ver. 14.1.0 Ref. RTS/TSGS-0223002ve10 Technical Body: 3GPP SA 2 Details and Download	**Digital cellular telecommunications system (Phase 2+) (GSM); Universal Mobile Telecommunications System (UMTS); LTE; Network architecture (3GPP TS 23.002 version 14.1.0 Release 14)** Network architecture	Published Current Status: Publication (2017-05-10)
5 FINALIZED	Doc. Nb. TS 123 002 Ver. 13.7.0 Ref. RTS/TSGS-0223002vd70 Technical Body: 3GPP SA 2 Details and Download	**Digital cellular telecommunications system (Phase 2+) (GSM); Universal Mobile Telecommunications System (UMTS); LTE; Network architecture (3GPP TS 23.002 version 13.7.0 Release 13)** Network architecture	Published Current Status: Publication (2016-10-05)
6 FINALIZED	Doc. Nb. TS 123 002 Ver. 13.6.0 Ref. RTS/TSGS-0223002vd60 Technical Body: 3GPP SA 2 Details and Download	**Digital cellular telecommunications system (Phase 2+) (GSM); Universal Mobile Telecommunications System (UMTS); LTE; Network architecture (3GPP TS 23.002 version 13.6.0 Release 13)** Network architecture	Published Current Status: Publication (2016-07-28)

7 FINALIZED	Doc. Nb. TS 123 002 Ver. **13.5.0** Ref. **RTS/TSGS-0223002vd50** Technical Body: 3GPP SA 2 Details and Download	**Digital cellular telecommunications system (Phase 2+) (GSM); Universal Mobile Telecommunications System (UMTS); LTE; Network architecture (3GPP TS 23.002 version 13.5.0 Release 13)** Network architecture	Published Current Status: Publication (2016-04-12)
8 FINALIZED	Doc. Nb. TS 123 002 Ver. **13.4.0** Ref. **RTS/TSGS-0223002vd40** Technical Body: 3GPP SA 2 Details and Download	**Digital cellular telecommunications system (Phase 2+) (GSM); Universal Mobile Telecommunications System (UMTS); LTE; Network architecture (3GPP TS 23.002 version 13.4.0 Release 13)** Network architecture	Published Current Status: Publication (2016-03-08)
9 FINALIZED	Doc. Nb. TS 123 002 Ver. **12.7.0** Ref. **RTS/TSGS-0223002vc70** Technical Body: 3GPP SA 2 Details and Download	**Digital cellular telecommunications system (Phase 2+); Universal Mobile Telecommunications System (UMTS); LTE; Network architecture (3GPP TS 23.002 version 12.7.0 Release 12)** Network architecture	Published Current Status: Publication (2015-07-17)
10 FINALIZED	Doc. Nb. TS 123 002 Ver. **12.6.0** Ref. **RTS/TSGS-0223002vc60** Technical Body: 3GPP SA 2 Details and Download	**Digital cellular telecommunications system (Phase 2+); Universal Mobile Telecommunications System (UMTS); LTE; Network architecture (3GPP TS 23.002 version 12.6.0 Release 12)** Network architecture	Published Current Status: Publication (2015-01-08)

Found **63** Items...
Displaying items **1** to **10** ...

Next Page >>

Display 10 **Items/Page**

Display the 63 Items On One Page

New Query

Any comments or problems with this application? Please let us know...

Microsoft - Exhibit 1012
Microsoft v. Lemko- IPR2023-00531
Page 58 of 203

2023-02-10 Work Programme Version 2.3.3

Simple Search | Advanced Search | Pre-Defined Reports | Help

Work Items with ETSI Document Number of '123002' of Type 'TS'

View As Work Item Plan | View As Work Item Progress Report

<< Prev Page Found 63 Items... Displaying items 31 to 40 ... Next Page >>

	IDENTIFICATION	TITLE	STATUS
31 FINALIZED	Doc. Nb. TS 123 002 Ver. 8.1.1 Ref. RTS/TSGS-0223002v811 Technical Body: 3GPP SA 2 Details and Download	**Digital cellular telecommunications system (Phase 2+); Universal Mobile Telecommunications System (UMTS); Network architecture (3GPP TS 23.002 version 8.1.1 Release 8)** Network architecture	Published Current Status: Publication (2008-01-29)
32 FINALIZED	Doc. Nb. TS 123 002 Ver. 7.6.0 Ref. RTS/TSGS-0223002v760 Technical Body: 3GPP SA 2 Details and Download	**Digital cellular telecommunications system (Phase 2+); Universal Mobile Telecommunications System (UMTS); LTE; Network architecture (3GPP TS 23.002 version 7.6.0 Release 7)** Network architecture	Published Current Status: Publication (2009-01-09)
33 FINALIZED	Doc. Nb. TS 123 002 Ver. 7.5.0 Ref. RTS/TSGS-0223002v750 Technical Body: 3GPP SA 2 Details and Download	**Digital cellular telecommunications system (Phase 2+); Universal Mobile Telecommunications System (UMTS); Network architecture (3GPP TS 23.002 version 7.5.0 Release 7)** Network architecture	Published Current Status: Publication (2008-10-07)
34 FINALIZED	Doc. Nb. TS 123 002 Ver. 7.4.0 Ref. RTS/TSGS-0223002v740 Technical Body: 3GPP SA 2 Details and Download	**Digital cellular telecommunications system (Phase 2+); Universal Mobile Telecommunications System (UMTS); Network architecture (3GPP TS 23.002 version 7.4.0 Release 7)** Network architecture	Published Current Status: Publication (2008-01-29)
35 FINALIZED	Doc. Nb. TS 123 002 Ver. 7.3.1 Ref. RTS/TSGS-0223002v731 Technical Body: 3GPP SA 2 Details and Download	**Digital cellular telecommunications system (Phase 2+); Universal Mobile Telecommunications System (UMTS); Network architecture (3GPP TS 23.002 version 7.3.1 Release 7)** Network architecture	Published Current Status: Publication (2007-10-26)
36 FINALIZED	Doc. Nb. TS 123 002 Ver. 7.3.0 Ref. RTS/TSGS-0223002v730 Technical Body: 3GPP SA 2 Details and Download	**Digital cellular telecommunications system (Phase 2+); Universal Mobile Telecommunications System (UMTS); Network architecture (3GPP TS 23.002 version 7.3.0 Release 7)** Network architecture	Published Current Status: Publication (2007-10-08)
37 FINALIZED	Doc. Nb. TS 123 002 Ver. 7.2.0 Ref. RTS/TSGS-0223002v720 Technical Body: 3GPP SA 2 Details and Download	**Digital cellular telecommunications system (Phase 2+); Universal Mobile Telecommunications System (UMTS); Network architecture (3GPP TS 23.002 version 7.2.0 Release 7)** Network architecture	Published Current Status: Publication (2007-07-18)
38 FINALIZED	Doc. Nb. TS 123 002 Ver. 7.1.0 Ref. RTS/TSGS-0223002v710 Technical Body: 3GPP SA 2 Details and Download	**Digital cellular telecommunications system (Phase 2+); Universal Mobile Telecommunications System (UMTS); Network architecture (3GPP TS 23.002 version 7.1.0 Release 7)** Network architecture	Published Current Status: Publication (2006-05-15)

39 FINALIZED	Doc. Nb. TS 123 002 Ver. **7.0.0** Ref. **RTS/TSGS-0223002v700** Technical Body: 3GPP SA 2 Details and Download	**Digital cellular telecommunications system (Phase 2+); Universal Mobile Telecommunications System (UMTS); Network architecture (3GPP TS 23.002 version 7.0.0 Release 7)** Network architecture	Published Current Status: Publication (2006-01-27)
40 FINALIZED	Doc. Nb. TS 123 002 Ver. **6.10.0** Ref. **RTS/TSGS-0223002v6a0** Technical Body: 3GPP SA 2 Details and Download	**Digital cellular telecommunications system (Phase 2+); Universal Mobile Telecommunications System (UMTS); Network architecture (3GPP TS 23.002 version 6.10.0 Release 6)** Network architecture	Published Current Status: Publication (2006-01-06)

<< Prev Page

Found 63 Items...
Displaying Items 31 to 40 ...

Next Page >>

Display 10 **Items/Page**

Display the 63 Items On One Page

New Query

Any comments or problems with this application? Please let us know...

Microsoft - Exhibit 1012
Microsoft v. Lemko- IPR2023-00531
Page 60 of 203

APPENDIX 0001D

portal.etsi.org/webapp/WorkProgram/Report_WorkItem.asp?WKI_ID=24668

2023-02-10 **Work Programme** Version 2.3.3

Simple Search | Advanced Search | Pre-Defined Reports | Help

Details of 'RTS/TSGS-0223002v710' Work Item

	Work Item Reference	ETSI Doc. Number	STF	Technical Body in Charge	Download Standard
	RTS/TSGS-0223002v710	TS 123 002		3GPP SA 2	
	Current Status (Click to View Full Schedule)	**Latest Version**	**Cover Date**	**Standstill**	**Creation Date**
	Publication (2006-05-15)	7.1.0	2006-03-31		2006-03-27
	Rapporteur	**Technical Officer**		**Harmonised Standard**	
	Alexander Milinski	Maurice Pope		No	

Title	Digital cellular telecommunications system (Phase 2+); Universal Mobile Telecommunications System (UMTS); Network architecture (3GPP TS 23.002 version 7.1.0 Release 7) Network architecture
Scope and Field of Application	SP-31
Supporting Organizations	Not Available

	Keywords	Projects	Clusters	Frequencies	Mandates	Directives
	GSM UMTS	3GPP 3GPP-Release-7 3GPP-SA	Wireless Systems			
Official Journal						
Remarks						

Any comments or problems with this application? Please let us know...

2023-01-25 **Work Programme** Version 2.3.3

Simple Search | Advanced Search | Pre-Defined Reports | Help

Details of 'RTS/TSGS-0223002v710' Work Item

Work Item Reference	ETSI Doc. Number	STF	Technical Body in Charge	Download Standard
RTS/TSGS-0223002v710	TS 123 002		3GPP SA 2	
Current Status (Click to View Full Schedule)	**Latest Version**	**Cover Date**	**Standstill**	**Creation Date**
Publication (2006-05-15)	7.1.0	2006-03-31		2006-03-27
Rapporteur	**Technical Officer**		**Harmonised Standard**	
Alexander Milinski	Maurice Pope		No	

Title	Digital cellular telecommunications system (Phase 2+); Universal Mobile Telecommunications System (UMTS); Network architecture (3GPP TS 23.002 version 7.1.0 Release 7) Network architecture
Scope and Field of Application	SP-31
Supporting Organizations	Not Available

Keywords	Projects	Clusters	Frequencies	Mandates	Directives
GSM UMTS	3GPP 3GPP-Release-7 3GPP-SA	Wireless Systems			

Official Journal

Remarks

<< Previous Standard

Displaying Item **38** of **63**...

Next Standard >>

Back to Work Items Summary List

Any comments or problems with this application? Please let us know...

Microsoft - Exhibit 1012
Microsoft v. Lemko- IPR2023-00531
Page 63 of 203

APPENDIX 0001E

portal.etsi.org/eWPM/index.html#/schedule?WKI_ID=24668

Work Programme

Simple search Advanced search Pre-Defined Reports Help

Details of 'RTS/TSGS-0223002v710' Work Item Schedule

Code	Milestone	Action	Action Nb	Target	Achieved	Version
0	Creation of WI by WG/TB			2012-10-15	2006-03-16	
8	TB approval				2006-03-16	7.1.0
8 A	Draft receipt by ETSI Secretariat			2006-04-06	2006-03-24	
12	Publication	PU		2006-04-07	2006-05-15	7.1.0

Any comments or problems with this application? Please let us know...

Details of 'RTS/TSGS-0223002v710' Work Item Schedule

Code	Milestone	Action	Action Nb	Target	Achieved	Version
0	Creation of WI by WG/TB			2012-10-15	2006-03-16	
8	TB approval				2006-03-16	7.1.0
8 A	Draft receipt by ETSI Secretariat			2006-04-06	2006-03-24	
12	Publication	PU		2006-04-07	2006-05-15	7.1.0

Any comments or problems with this application? Please let us know...

Microsoft - Exhibit 1012
Microsoft v. Lemko- IPR2023-00531
Page 66 of 203

APPENIDX 0001F

General Versions Responsibility Related

Specification #: 23.002

Reference:	23.002
Title:	Network architecture
Status:	Under change control CR
Type:	Technical specification (TS)
Initial planned Release:	Release 1999
Internal:	☐
Common IMS Specification:	☐
Radio technology:	☑ 2G ☑ 3G ☑ LTE ☐ 5G

Click to see all versions of this specification

Remarks (1)

Creation date	Author	Remark
2015-01-22 12:41 UTC		Transfer>TSG#4,CR at TSG#5

History

Action date	Action	Author
No records to display.		

Exit

Microsoft - Exhibit 1012
Microsoft v. Lemko- IPR2023-00531
Page 68 of 203

www.3gpp.org / ftp / Specs / archive / 23_series / 23.002

sort by name/desc	sort by date/desc	sort by size/desc
23002-310.zip	1999/10/22 5:54	155,1 KB
23002-320.zip	2000/01/06 17:26	198 KB
23002-330.zip	2000/04/04 19:09	194,5 KB
23002-340.zip	2000/12/21 14:37	199,5 KB
23002-350.zip	2002/01/07 10:38	203,8 KB
23002-360.zip	2002/09/24 8:26	205,8 KB
23002-400.zip	2000/10/18 13:25	279,8 KB
23002-410.zip	2000/12/21 14:37	280,4 KB
23002-420.zip	2001/04/06 9:21	201,8 KB
23002-430.zip	2001/06/28 16:04	214,5 KB
23002-440.zip	2002/01/07 10:29	218,7 KB
23002-450.zip	2002/09/24 13:59	220,2 KB
23002-460.zip	2003/01/07 16:19	235 KB
23002-470.zip	2003/03/26 14:32	229 KB
23002-480.zip	2003/06/19 14:32	231,1 KB
23002-500.zip	2000/10/18 13:25	352,7 KB
23002-510.zip	2000/12/21 14:37	360,5 KB
23002-520.zip	2001/04/06 8:23	244,2 KB
23002-530.zip	2001/07/12 8:53	251,4 KB
23002-540.zip	2001/10/12 13:26	252,2 KB
23002-550.zip	2002/01/22 15:57	258,9 KB
23002-560.zip	2002/04/02 12:25	284,7 KB
23002-570.zip	2002/06/17 8:36	286,2 KB
23002-580.zip	2002/09/24 8:27	298,7 KB
23002-590.zip	2003/01/07 16:20	331,4 KB
23002-5a0.zip	2003/03/26 14:32	314,9 KB
23002-5b0.zip	2003/06/19 14:33	320,2 KB
23002-5c0.zip	2003/09/29 13:39	324,2 KB
23002-600.zip	2003/03/26 14:32	325,7 KB

Microsoft - Exhibit 1012
Microsoft v. Lemko- IPR2023-00531
Page 69 of 203

sort by name/desc	sort by date/desc	sort by size/desc
23002-601.zip	2003/03/31 8:46	326,8 KB
23002-610.zip	2003/06/19 14:33	330,2 KB
23002-620.zip	2003/09/29 13:39	331,9 KB
23002-630.zip	2004/01/04 4:53	344,7 KB
23002-640.zip	2004/03/31 9:22	348,3 KB
23002-650.zip	2004/06/23 7:24	664 KB
23002-660.zip	2005/01/04 8:53	671,2 KB
23002-670.zip	2005/03/24 13:36	653,8 KB
23002-680.zip	2005/06/02 16:01	1041,9 KB
23002-690.zip	2005/10/04 18:04	1054,8 KB
23002-6a0.zip	2005/11/25 10:35	1064,9 KB
23002-700.zip	2005/11/25 10:37	1064,8 KB
23002-710.zip	2006/03/10 3:38	1065,3 KB
23002-720.zip	2007/06/13 13:24	1495,7 KB
23002-730.zip	2007/09/24 8:23	1499,1 KB
23002-731.zip	2007/10/24 7:19	1498,2 KB
23002-740.zip	2007/12/06 21:05	1502,4 KB
23002-750.zip	2008/09/18 4:38	1543,7 KB
23002-760.zip	2008/12/12 11:09	1542,8 KB
23002-800.zip	2007/06/13 13:25	1497,3 KB
23002-810.zip	2007/09/24 8:27	1499,6 KB
23002-811.zip	2007/10/24 7:20	1499,2 KB
23002-820.zip	2007/12/06 21:06	1529,6 KB
23002-830.zip	2008/09/18 4:36	2498,4 KB
23002-840.zip	2008/12/16 14:40	2615 KB
23002-850.zip	2009/06/08 8:21	2594,2 KB
23002-860.zip	2009/09/28 14:17	2599,1 KB
23002-870.zip	2010/12/20 14:14	2606,4 KB
23002-900.zip	2009/06/08 8:21	2852,1 KB
23002-910.zip	2009/09/28 14:19	2852,4 KB
23002-920.zip	2009/12/10 3:56	2844,6 KB
23002-930.zip	2010/06/14 8:29	2890,1 KB
23002-940.zip	2010/09/29 9:37	2873,8 KB

Microsoft - Exhibit 1012
Microsoft v. Lemko- IPR2023-00531
Page 70 of 203

sort by name/desc	sort by date/desc	sort by size/desc
23002-950.zip	2010/12/17 12:18	2883,8 KB
23002-960.zip	2011/08/24 14:43	2882,2 KB
23002-a00.zip	2010/09/29 9:37	2928,3 KB
23002-a10.zip	2010/12/17 14:31	2935,7 KB
23002-a11.zip	2011/01/04 12:52	2940,9 KB
23002-a20.zip	2011/03/17 13:24	2932,5 KB
23002-a30.zip	2011/08/24 14:43	2950 KB
23002-a40.zip	2011/12/14 13:21	2947,1 KB
23002-a50.zip	2012/12/13 14:17	2944,6 KB
23002-a60.zip	2014/06/20 5:11	2933,4 KB
23002-b00.zip	2011/08/24 14:43	3110 KB
23002-b10.zip	2011/12/14 13:22	3105,1 KB
23002-b20.zip	2012/03/08 14:31	3107,9 KB
23002-b30.zip	2012/06/15 7:44	3227,9 KB
23002-b40.zip	2012/09/11 22:06	3226,4 KB
23002-b50.zip	2012/12/13 14:22	3227,3 KB
23002-b60.zip	2013/06/21 21:05	3220,3 KB
23002-c00.zip	2012/09/11 22:06	3206,4 KB
23002-c10.zip	2012/12/13 14:26	3207,3 KB
23002-c20.zip	2013/06/24 14:28	3243,1 KB
23002-c30.zip	2013/12/13 15:16	3076,9 KB
23002-c40.zip	2014/03/10 13:21	3327,1 KB
23002-c50.zip	2014/06/20 5:16	3329,2 KB
23002-c60.zip	2014/12/05 14:39	3332,3 KB
23002-c70.zip	2015/06/16 15:51	3340,6 KB
23002-d00.zip	2014/09/17 13:26	3345,2 KB
23002-d10.zip	2014/12/05 14:40	3349,6 KB
23002-d20.zip	2015/06/16 15:52	3349,8 KB
23002-d30.zip	2015/09/15 4:14	3353,9 KB
23002-d40.zip	2015/12/15 11:12	3225,2 KB
23002-d50.zip	2016/03/15 15:36	3228,4 KB
23002-d60.zip	2016/06/22 5:21	3230,9 KB
23002-d70.zip	2016/09/26 12:04	3241,2 KB

Microsoft - Exhibit 1012
Microsoft v. Lemko- IPR2023-00531
Page 71 of 203

sort by name/desc	sort by date/desc	sort by size/desc
23002-e00.zip	2016/09/26 14:32	3243,3 KB
23002-e10.zip	2017/03/13 12:59	3243,9 KB
23002-f00.zip	2018/03/27 8:07	3239,8 KB
23002-g00.zip	2020/07/09 6:15	3253,4 KB
23002-h00.zip	2021/03/30 13:16	3215,3 KB

100 items.

Microsoft - Exhibit 1012
Microsoft v. Lemko- IPR2023-00531
Page 72 of 203

APPENDIX 0001G

web.archive.org/web/20230000000000*/https://www.3gpp.org/ftp/Specs/archive/23_series/23.002/

INTERNET ARCHIVE

SIGN UP | LOG IN UPLOAD Search

ABOUT BLOG PROJECTS HELP DONATE CONTACT JOBS VOLUNTEER PEOPLE

DONATE

INTERNET ARCHIVE WayBackMachine

Explore more than 788 billion web pages saved over time

https://www.3gpp.org/ftp/Specs/archive/23_series/23.002/

Calendar · Collections · Changes · Summary · Site Map · URLs

Saved **119 times** between January 10, 2002 and October 5, 2022.

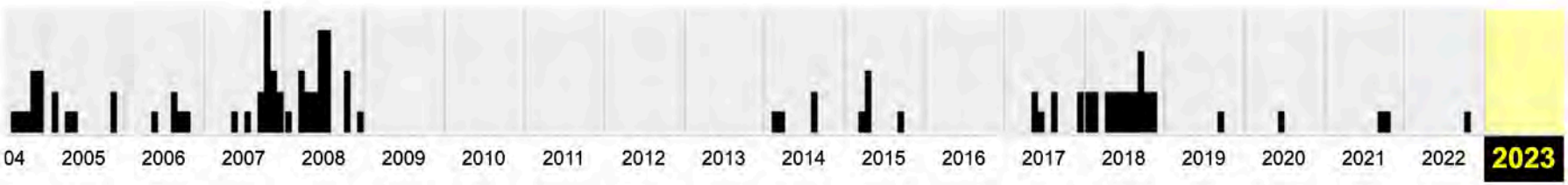

JAN	FEB	MAR	APR
1 2 3 4 5 6 7	1 2 3 4	1 2 3 4	1
8 9 10 11 12 13 14	5 6 7 8 9 10 11	5 6 7 8 9 10 11	2 3 4 5 6 7 8

web.archive.org/web/20060526165717/https://www.3gpp.org/ftp/Specs/archive/23_series/23.002/

https://www.3gpp.org/ftp/Specs/archive/23_series/23.002/ Go

NOV MAY AUG

26

2005 2006 2007

119 captures

10 Jan 2002 - 5 Oct 2022

About this capture

www.3gpp.org - /ftp/Specs/archive/23_series/23.002/

[To Parent Directory]

22 October 1999	06:54	158894	23002-310.zip
06 January 2000	18:26	202785	23002-320.zip
04 April 2000	20:09	199257	23002-330.zip
21 December 2000	15:37	204321	23002-340.zip
07 January 2002	11:38	208733	23002-350.zip
24 September 2002	09:26	210822	23002-360.zip
18 October 2000	14:25	286610	23002-400.zip
21 December 2000	15:37	287146	23002-410.zip
06 April 2001	10:21	206707	23002-420.zip

The Wayback Machine - https://web.archive.org/web/20060526165717/http://www.3gpp.org:80/ftp/Specs/arch…

www.3gpp.org - /ftp/Specs/archive/23_series/23.002/

[To Parent Directory]

22 October 1999	06:54	158894	23002-310.zip
06 January 2000	18:26	202785	23002-320.zip
04 April 2000	20:09	199257	23002-330.zip
21 December 2000	15:37	204321	23002-340.zip
07 January 2002	11:38	208733	23002-350.zip
24 September 2002	09:26	210822	23002-360.zip
18 October 2000	14:25	286610	23002-400.zip
21 December 2000	15:37	287146	23002-410.zip
06 April 2001	10:21	206707	23002-420.zip
28 June 2001	17:04	219687	23002-430.zip
07 January 2002	11:29	223991	23002-440.zip
24 September 2002	14:59	225524	23002-450.zip
07 January 2003	17:19	240681	23002-460.zip
26 March 2003	15:32	234597	23002-470.zip
19 June 2003	15:32	236717	23002-480.zip
18 October 2000	14:25	361243	23002-500.zip
21 December 2000	15:37	369224	23002-510.zip
06 April 2001	09:23	250065	23002-520.zip
12 July 2001	09:53	257511	23002-530.zip
12 October 2001	14:26	258341	23002-540.zip
22 January 2002	16:57	265144	23002-550.zip
02 April 2002	13:25	291602	23002-560.zip
17 June 2002	09:36	293143	23002-570.zip
24 September 2002	09:27	305962	23002-580.zip
07 January 2003	17:20	339367	23002-590.zip
26 March 2003	15:32	322472	23002-5a0.zip
19 June 2003	15:33	327938	23002-5b0.zip
29 September 2003	14:39	332000	23002-5c0.zip
26 March 2003	15:32	333564	23002-600.zip
31 March 2003	09:46	334662	23002-601.zip
19 June 2003	15:33	338176	23002-610.zip
29 September 2003	14:39	339932	23002-620.zip
04 January 2004	05:53	353071	23002-630.zip
31 March 2004	10:22	356728	23002-640.zip
23 June 2004	08:24	679982	23002-650.zip
04 January 2005	09:53	687382	23002-660.zip
24 March 2005	14:36	669586	23002-670.zip
02 June 2005	17:01	1067001	23002-680.zip
04 October 2005	19:04	1080175	23002-690.zip
25 November 2005	11:35	1090523	23002-6a0.zip
25 November 2005	11:37	1090423	23002-700.zip
10 March 2006	04:38	1090905	23002-710.zip

Microsoft - Exhibit 1012
Microsoft v. Lemko- IPR2023-00531
Page 76 of 203

APPENDIX 0001H

3GPP TS 23.002 V7.1.0 (2006-03)

Technical Specification

3rd Generation Partnership Project;
Technical Specification Group Services and Systems Aspects;
Network architecture
(Release 7)

GLOBAL SYSTEM FOR
MOBILE COMMUNICATIONS

The present document has been developed within the 3rd Generation Partnership Project (3GPP TM) and may be further elaborated for the purposes of 3GPP.

The present document has not been subject to any approval process by the 3GPP Organisational Partners and shall not be implemented.
This Specification is provided for future development work within 3GPP only. The Organisational Partners accept no liability for any use of this Specification.
Specifications and reports for implementation of the 3GPP TM system should be obtained via the 3GPP Organisational Partners' Publications Offices.

Keywords
GSM, UMTS, network, architecture

3GPP

Postal address
F-06921 Sophia Antipolis Cedex - FRANCE

Office address
650 Route des Lucioles - Sophia Antipolis
Valbonne - FRANCE
Tel.: +33 4 92 94 42 00 Fax: +33 4 93 65 47 16

Internet
http://www.3gpp.org

Copyright Notification

No part may be reproduced except as authorized by written permission.
The copyright and the foregoing restriction extend to reproduction in all media.

© 2006, 3GPP Organizational Partners (ARIB, ATIS, CCSA, ETSI, TTA, TTC).
All rights reserved.

Microsoft - Exhibit 1012
Microsoft v. Lemko- IPR2023-00531
Page 79 of 203

Contents

Foreword 8
Introduction 8
1 Scope 9
2 References 9
3 Definitions and abbreviations....12
3.1 Public Land Mobile Network (PLMN)....12
3.2 Core Network (CN) and Access Network (AN)....12
3.3 Circuit Switched (CS) and Packet Switched (PS) Domains....13
3.3.1 CS Domain....13
3.3.2 PS Domain....13
3.3a IP Multimedia subsystem (IMS)....13
3.4 Location register....13
3.5 Cell....14
3.6 Base Station Controller (BSC) area....14
3.7 Radio Network Controller (RNC) area....14
3.8 Location Area (LA)....14
3.9 Routing Area (RA)....14
3.10 MSC area....14
3.11 VLR area....14
3.12 SGSN area....14
3.13 Zones for Regional Subscription....14
3.14 Service area....15
3.15 Group call area....15
3.16 Pool-area....15
4 The basic entities of the mobile system....15
4.1 The Core Network (CN) entities....15
4.1.1 Entities common to the PS and CS domains....15
4.1.1.1 The Home Subscriber Server (HSS)....15
4.1.1.1.1 The Home Location Register (HLR)....16
4.1.1.1.2 The Authentication Centre (AuC)....17
4.1.1.1.3 HSS logical functions....17
4.1.1.2 The Visitor Location Register (VLR)....19
4.1.1.3 (void)....19
4.1.1.4 The Equipment Identity Register (EIR)....19
4.1.1.5 SMS Gateway MSC (SMS-GMSC)....20
4.1.1.6 SMS Interworking MSC (SMS-IWMSC)....20
4.1.1.7 Subscription Locator Function (SLF)....20
4.1.2 Entities of the CS domain....20
4.1.2.1 The Mobile-services Switching Centre (MSC)....20
4.1.2.1.1 MSC Server....21
4.1.2.1.2 Circuit Switched - Media Gateway Function (CS-MGW)....21
4.1.2.2 The Gateway MSC (GMSC)....21
4.1.2.2.1 Gateway MSC Server (GMSC Server)....22
4.1.2.3 The Interworking Function (IWF)....22
4.1.3 Entities of the PS domain....22
4.1.3.1 Serving GPRS Support Node (SGSN)....22
4.1.3.2 Gateway GPRS Support Node (GGSN)....23
4.1.3.3 Border Gateway (BG)....23
4.2 The Access Network (AN) entities....23
4.2.1 The Base Station System (BSS)....23
4.2.1.1 Base Station Controller (BSC)....24
4.2.1.2 Base Transceiver Station (BTS)....24

Microsoft - Exhibit 1012
Microsoft v. Lemko- IPR2023-00531
Page 80 of 203

4.2.2 The Radio Network System (RNS) ... 24
4.2.2.1 Radio Network Controller (RNC) ... 24
4.2.2.2 Node B ... 24
4.3 The Mobile Station (MS) ... 24

4a The specific entities of the mobile system ... 24
4a.1 The Group Call Register (GCR) entity ... 24
4a.2 (void) ... 25
4a.3 The Location Services (LCS) entities ... 25
4a.3.1 Location Services (LCS) entities in RAN ... 25
4a.3.2 Gateway Mobile Location Center (GMLC) ... 26
4a.3.3 Location Measurement Unit (LMU) ... 26
4a.4 CAMEL entities ... 27
4a.4.1 GSM Service Control Function (gsmSCF) ... 27
4a.4.2 GSM Service Switching Function (gsmSSF) ... 27
4a.4.3 GSM Specialised Resource Function (gsmSRF) ... 27
4a.4.4 GPRS Service Switching Function (gprsSSF) ... 27
4a.5 CBS-specific entities ... 27
4a.5.1 Cell Broadcast Center (CBC) ... 27
4a.6 Number Portability Specific entities ... 27
4a.6.1 IN-based solution: Number Portability Database (NPDB) ... 28
4a.6.2 Signalling Relay-based solution: Mobile Number Portability/Signalling Relay function (MNP-SRF) ... 28
4a.7 IP Multimedia (IM) Core Network (CN) Subsystem entities ... 28
4a.7.1 Call Session Control Function (CSCF) ... 28
4a.7.2 Media Gateway Control Function (MGCF) ... 28
4a.7.3 IP Multimedia Subsystem - Media Gateway Function (IMS-MGW) ... 28
4a.7.4 Multimedia Resource Function Controller (MRFC) ... 29
4a.7.4a Multimedia Resource Function Processor (MRFP) ... 29
4a.7.5 Void ... 29
4a.7.6 Breakout Gateway Control Function (BGCF) ... 29
4a.7.7 Application Server (AS) ... 29
4a.7.8 Interconnection Border Control Function (IBCF) ... 30
4a.7.9 Transition Gateway (TrGW) ... 30
4a.8 Signalling Gateway Function (SGW) ... 30
4a.9 Global Text Telephony Specific entities ... 30
4a.10 Security Gateway (SEG) ... 30
4a.11 Application Function (AF) ... 31
4a.12 Policy Decision Function (PDF) ... 31
4a.13 3GPP/WLAN Interworking entities ... 31
4a.13.1 WLAN UE ... 31
4a.13.2 3GPP AAA Proxy ... 31
4a.13.3 3GPP AAA Server ... 31
4a.13.4 WLAN Access Gateway (WAG) ... 31
4a.13.5 Packet Data Gateway (PDG) ... 31
4a.14 Multimedia Broadcast Multicast Service (MBMS) specific entities ... 31
4a.14.1 General ... 31
4a.14.2 Broadcast-Multicast Service Centre (BM-SC) ... 31
4a.15 Charging Rules Function (CRF) ... 32
4a.16 GUP Server ... 32

5 Configuration of a Public Land Mobile Network ... 32
5.1 Basic configuration ... 32
5.2 Configuration of LCS entities ... 34
5.2.1 Configuration of LCS entities for GERAN ... 34
5.2.2 Configuration of LCS entities for UTRAN ... 35
5.3 Configuration of CAMEL entities ... 35
5.4 Configuration of CBS entities ... 36
5.5 Configuration of IM CN Subsystem entities ... 36
5.6 Configuration of Signalling Gateway Function ... 38
5.7 Configuration of 3GPP/WLAN Interworking ... 39
5.8 Configuration of Presence service ... 39
5.9 Configuration of MBMS entities ... 40

Microsoft - Exhibit 1012
Microsoft v. Lemko- IPR2023-00531
Page 81 of 203

6 PLMN basic interfaces and reference points 40
6.1 Interfaces between Mobile Station and the Fixed Infrastructure 40
6.1.1 Interface between Mobile Station and Base Station System (Um-interface) 40
6.1.2 Interface between User Equipment and Radio Netwok System (Uu-interface) 40
6.2 Interface between the Core Network and the Access Network 41
6.2.1 Interfaces between the CS domain and the Access Network 41
6.2.1.1 Interface between the MSC and Base Station System (A-interface) 41
6.2.1.2 Interface between the MSC and Base Station System (Iu_CS interface) 41
6.2.1.3 Interface between the MSC and RNS (Iu_CS interface) 41
6.2.2 Interfaces between the PS domain and the Access Network 41
6.2.2.1 Interface between SGSN and BSS (Gb-interface) 41
6.2.2.2 Interface between SGSN and BSS (Iu_PS-interface) 41
6.2.2.3 Interface between SGSN and RNS (Iu_PS-interface) 42
6.3 Interfaces internal to the Access Network 42
6.3.1 Interface between BSC and BTS (Abis-interface) 42
6.3.2 Interface between RNC and Node B (Iub-interface) 42
6.3.3 Interface between two RNCs (Iur-interface) 42
6.4 Interfaces internal to the Core Network 42
6.4.1 Interfaces internal to the CS domain 42
6.4.1.1 Interface between the MSC server and its associated VLR (B-interface) 42
6.4.1.2 Interface between the HLR and the MSC server (C-interface) 42
6.4.1.3 Interface between the HLR and the VLR (D-interface) 43
6.4.1.4 Interface between MSC servers (E-interface) 43
6.4.1.5 Interface between MSC server and EIR (F-interface) 43
6.4.1.6 Interface between VLRs (G-interface) 43
6.4.1.7 Reference point (G)MSC server – CS-MGW (Mc Reference Point) 43
6.4.1.8 Reference Point MSC Server – GMSC Server (Nc Reference Point) 44
6.4.1.9 Reference Point CS-MGW – CS-MGW (Nb Reference Point) 44
6.4.2 Interfaces internal to the PS domain 44
6.4.2.1 Interface between SGSN and HLR (Gr-interface) 44
6.4.2.2 Interface between SGSN and GGSN (Gn- and Gp-interface) 44
6.4.2.3 Signalling Path between GGSN and HLR (Gc-interface) 44
6.4.2.4 Interface between SGSN and EIR (Gf-interface) 45
6.4.3 Interfaces used by CS and PS domains 45
6.4.3.1 Interface between MSC/VLR and SGSN (Gs-interface) 45
6.4.3.2 Interface between HLR and AuC (H-Interface) 45
6.4.3.3 Interface between SGSN and SMS-GMSC/SMS-IWMSC (Gd-Interface) 45

6a PLMN specific interfaces 45
6a.1 GCR-specific interface 45
6a.1.1 Interface between the MSC and its associated GCR (I-interface) 45
6a.2 (void) 45
6a.3 LCS-specific interfaces 45
6a.3.1 LCS interfaces using MAP 45
6a.3.2 (void) 46
6a.3.3 (void) 46
6a.3.4 (void) 46
6a.3.5 Interface between BSC and SMLC (Lb-interface) 46
6a.3.6 Interface between Peer SMLCs (Lp-interface) 46
6a.3.7 Interface between BTS and LMU (Um-interface) 46
6a.3.8 Interface between GMLC and External LCS Client (Le-interface) 46
6a.3.9 Interface between RNS and Stand-Alone LMU, UE (Uu-interface) 46
6a.3.10 Interface between SRNC and SAS (Stand-Alone SMLC) (Iupc-interface) 47
6a.3.11 Interface between GMLC and GMLC (Lr-interface) 47
6a.4 CAMEL-specific interfaces 47
6a.4.1 GMSC - gsmSSF interface 47
6a.4.2 gsmSSF - gsmSCF interface 47
6a.4.3 MSC - gsmSSF interface 47
6a.4.4 gsmSCF - HLR interface 47
6a.4.5 gsmSCF - gsmSRF interface 47
6a.4.6 MSC - gsmSCF interface 47
6a.4.7 SGSN - gprsSSF interface 47

Microsoft - Exhibit 1012
Microsoft v. Lemko- IPR2023-00531
Page 82 of 203

6a.4.8 gprsSSF - gsmSCF interface (Ge Reference Point) ... 47
6a.5 CBS-specific interfaces ... 48
6a.5.1 Interface between the CBC and RNS (Iu_BC Interface) ... 48
6a.6 Number portability specific interfaces ... 48
6a.6.1 IN-based solution ... 48
6a.6.1.1 NPDB to MSC interface ... 48
6a.6.2 Signalling Relay-based solution ... 48
6a.6.2.1 GMSC to MNP-SRF interface ... 48
6a.6.2.2 MNP-SRF to HLR interface ... 48
6a.7 IM Subsystem Reference Points ... 48
6a.7.1 Reference Point HSS – CSCF (Cx Reference Point) ... 48
6a.7.2 Reference Point CSCF – UE (Gm Reference Point) ... 49
6a.7.3 Reference Point MGCF – IMS-MGW (Mn Reference Point) ... 49
6a.7.4 Reference Point MGCF – CSCF (Mg Reference Point) ... 49
6a.7.5 (void) ... 49
6a.7.6 Reference Point CSCF - MRFC (Mr Reference Point) ... 49
6a.7.6a Reference Point MRFC – MRFP (Mp Reference Point) ... 49
6a.7.7 Reference Point CSCF – CSCF (Mw Reference Point) ... 49
6a.7.8 (void) ... 50
6a.7.9 (void) ... 50
6a.7.10 Reference Point CSCF – BGCF (Mi reference point) ... 50
6a.7.11 Reference Point BGCF – MGCF (Mj reference point) ... 50
6a.7.12 Reference Point BGCF/IBCF – BGCF (Mk reference point) ... 50
6a.7.13 Reference Point CSCF- SLF (Dx Reference Point) ... 50
6a.7.14 Reference Point to IPv6 network services (Mb reference point) ... 50
6a.7.15 Reference Point S-CSCF – AS (ISC Reference Point) ... 50
6a.7.16 Reference Point HSS – SIP AS or OSA SCS (Sh Reference Point) ... 50
6a.7.17 Reference Point HSS – CAMEL IM-SSF (Si Reference Point) ... 51
6a.7.18 Reference Point UE – AS (Ut Reference Point) ... 51
6a.7.19 Reference Point AS- SLF (Dh Reference Point) ... 51
6a.7.20 Reference Point CSCF/BGCF - IBCF (Mx Reference Point) ... 51
6a.7.21 Reference Point IBCF - TrGW (Ix Reference Point) ... 51
6a.7.22 Reference Point I-CSCF – AS (Ma Reference Point) ... 51
6a.7.23 Reference Point P-CSCF – IMS Access Gateway (Iq Reference Point) ... 51
6a.8 Reference Points for Service Based Local Policy Control ... 52
6a.8.1 Reference Point GGSN – PDF (Go Reference Point) ... 52
6a.8.2 Reference Point PDF – Application Function (Gq Reference Point) ... 52
6a.9 Reference Points for 3GPP/WLAN Interworking ... 52
6a.9.1 Reference point 3GPP AAA Server - HLR (D'/Gr' Reference Point) ... 52
6a.9.2 Reference point WLAN access network - 3GPP AAA Proxy/Server (Wa Reference Point) ... 52
6a.9.3 Reference point 3GPP AAA Server – 3GPP AAA Proxy (Wd Reference Point) ... 52
6a.9.4 Reference point 3GPP AAA Server/Proxy - WAG (Wg Reference Point) ... 52
6a.9.5 Reference point PDG - packet data networks (Wi Reference Point) ... 52
6a.9.6 Reference Point 3GPP AAA Server/Proxy - PDG (Wm Reference Point) ... 52
6a.9.7 Reference Point WAG - WLAN access network (Wn Reference Point) ... 53
6a.9.8 Reference Point WAG - PDG (Wp Reference Point) ... 53
6a.9.9 Reference point WLAN UE - PDG (Wu Reference Point) ... 53
6a.9.10 Reference point WLAN UE - WLAN access network (Ww Reference Point) ... 53
6a.9.11 Reference point 3GPP AAA Server - HSS (Wx Reference Point) ... 53
6a.9.12 Reference point 3GPP AAA Server - SLF (Dw reference point) ... 53
6a.10 MBMS specific reference points ... 54
6a.10.1 Reference point GGSN – BM-SC (Gmb Reference Point) ... 54
6a.11 Reference Points for Flow Based Charging ... 54
6a.11.1 Reference Point GGSN – CRF (Gx Reference Point) ... 54
6a.11.2 Reference Point CRF – Application Function (Rx Reference Point) ... 54
6a.12 Reference Points for 3GPP Generic User Profile (GUP) ... 54
6a.12.1 Reference Point GUP Server – Applications (Rg Reference Point) ... 54
6a.12.2 Reference Point GUP Server – HSS and Applications – HSS (Rp Reference Point) ... 54

7 Reference points between the PLMN and other networks ... 54
7.1 Reference point fixed networks - MSC ... 55
7.2 Reference point GGSN - packet data networks (Gi reference point) ... 55

Microsoft - Exhibit 1012
Microsoft v. Lemko- IPR2023-00531
Page 83 of 203

7.3 Reference point GMLC - external LCS Client (Le reference point) ... 55
7.4 Reference Point CSCF/IBCF – Multimedia IP networks (Mm Reference Point) ... 55
7.5 (void) ... 55
7.6 Reference point PDG - packet data networks (Wi reference point) ... 55
7.7 Reference Point WAG – WLAN access network (Wn reference point) ... 55

Annex A (informative): Description for GLR-related entities and interfaces ... 56

A.1 Normative references ... 56

A.2 Definitions related to Gateway Location Register (GLR) ... 56
A.2.1 Gateway Location Register (GLR) ... 56
A.2.2 Intermediate Mobile-services Switching Centre (IM-MSC) ... 56
A.2.3 Intermediate GPRS Serving Node (IM-GSN) ... 56

A.3 The entities of the mobile system ... 56
A.3.1 Gateway Location Register (GLR) ... 56
A.3.2 Intermediate Mobile-services Switching Centre (IM-MSC) ... 57
A.3.3 Intermediate GPRS Serving Node (IM-GSN) ... 57

A.4 Configuration of a Public Land Mobile Network ... 57
A.4.1 Basic configuration with GLR introduction ... 57

A.5 PLMN interfaces ... 58
A.5.1 Interface between the HLR and the GLR (GLa-interface) ... 58
A.5.2 Interface between the VLR and the GLR (GLb-interface) ... 58
A.5.3 Interface between the SGSN and the GLR (GLc-interface) ... 58
A.5.4 Interface between the GLR and the IM_MSC (GLd-interface) ... 58
A.5.5 Interface between the GLR and the IM_GSN (GLe-interface) ... 58
A.5.6 Interface between the SMS-GMSC and the GLR (GLf-interface) ... 59
A.5.7 Interface between the SMS-GMSC and the IM_MSC (GLg-interface) ... 59
A.5.8 Interface between the MSC and the IM_MSC (GLh-interface) ... 59
A.5.9 Interface between the GMLC and the IM_MSC (GLi-interface) ... 59
A.5.10 Interface between the GGSN and the IM_GSN (GLj-interface) ... 59
A.5.11 Interface between the SGSN and the IM_GSN (GLk-interface) ... 59

Annex B (informative): Change history ... 60

Microsoft - Exhibit 1012
Microsoft v. Lemko- IPR2023-00531
Page 84 of 203

Foreword

This Technical Specification (TS) has been produced by the 3rd Generation Partnership Project (3GPP).

The contents of the present document are subject to continuing work within the TSG and may change following formal TSG approval. Should the TSG modify the contents of the present document, it will be re-released by the TSG with an identifying change of release date and an increase in version number as follows:

Version x.y.z

where:

- x the first digit:
  - 1 presented to TSG for information;
  - 2 presented to TSG for approval;
  - 3 or greater indicates TSG approved document under change control.
- y the second digit is incremented for all changes of substance, i.e. technical enhancements, corrections, updates, etc.
- z the third digit is incremented when editorial only changes have been incorporated in the document.

Introduction

This document presents the possible architectures of the Universal Mobile Telecommuncation System (UMTS).

covering both UTRAN and GERAN radio access techonologies.

Clause 3 of the document contains the definition of the PLMN entities.

Clause 4 of the document contains the description of the basic entities of the PLMN, and clause 4a contains the description of the specific entities of the PLMN.

Clause 5 of the document contains the configuration of the PLMN.

Clauses 6, 6a and 7 of the document contain the PLMN's basic and specific interfaces and reference points and the PLMN's interfaces towards other networks.

Microsoft - Exhibit 1012
Microsoft v. Lemko- IPR2023-00531
Page 85 of 203

1 Scope

This document offers an overview of the PLMN and its architectures and configuration. The configuration and the functional entities of the PLMN and the interfaces between them are described on a general level in order to cope with possible implementations. These descriptions include interfaces between and within the core networks, the access networks, the user equipment, different service platforms, different domains and subsystems, and functional entities within domains and subsystems.

This document covers different architectural aspects with varying level of detail. In general, other specifications shall be referred to for further details; these specifications enable the reader to acquire the full understanding of a system or service feature.

Note that this document does not cover, or even list, all features of PLMNs.

2 References

The following documents contain provisions which, through reference in this text, constitute provisions of the present document.

- References are either specific (identified by date of publication, edition number, version number, etc.) or non-specific.
- For a specific reference, subsequent revisions do not apply.
- For a non-specific reference, the latest version applies. In the case of a reference to a 3GPP document (including a GSM document), a non-specific reference implicitly refers to the latest version of that document *in the same Release as the present document*.

[1] [void]

[1a] 3GPP TR 21.905: "Vocabulary for 3GPP Specifications".

[2] 3GPP TS 22.016: "International Mobile station Equipment Identities (IMEI)".

[2a] 3GPP TS 22.060: "General Packet radio Service (GPRS); Service description; Stage 1".

[2b] 3GPP TS 22.071: "Location Services (LCS); Service description; Stage 1".

[2c] 3GPP TS 22.078: "Customised Applications for Mobile network Enhanced Logic (CAMEL); Service description, Stage 1".

[3] 3GPP TS 23.003: " Numbering, addressing and identification".

[4] 3GPP TS 22.127: "Open Service Access (OSA)".

[5] 3GPP TS 23.008: "Organization of subscriber data".

[6] 3GPP TS 23.009: "Handover procedures".

[7] 3GPP TS 23.012: "Location Management Procedures".

[8] 3GPP TS 23.041: "Technical realization of Cell Broadcast Service (CBS)".

[9] [void]

[9a] 3GPP TS 23.060: "General Packet Radio Service (GPRS); Service description; Stage 2".

[10] [void]

[10a] 3GPP TS 43.064: "Digital cellular telecommunication system (Phase 2+); General Packet Radio service (GPRS); Overall description of the GPRS radio interface; Stage 2".

Microsoft - Exhibit 1012
Microsoft v. Lemko- IPR2023-00531
Page 86 of 203

[10b] 3GPP TS 25.305: "Stage 2 Functional Specification of UE Positioning in UTRAN".

[10c] 3GPP TS 23.078: "Customised Applications for Mobile network Enhanced Logic (CAMEL) Phase 3 - Stage 2".

[10d] 3GPP TS 43.059: "Functional Stage 2 Description of Location Services in GERAN"[11]ITU-T Recommendation Q.1214 (05/1995): "Distributed Functional Plane for Intelligent Network CS-1".

[11a] 3GPP TS 23.101: "General UMTS Architecture".

[11b] 3GPP TS 23.110: "UMTS Access Stratum); Services and Functions".

[12] 3GPP TS 24.002: "GSM - UMTS Public Land Mobile Network (PLMN) access reference configuration".

[13] 3GPP TS 48.001: "Base Station System - Mobile-services Switching Centre (BSS - MSC) interface; General aspects".

[14] 3GPP TS 48.002: "Base Station System - Mobile-services Switching Centre (BSS - MSC) interface; Interface principles".

[14a] 3GPP TS 25.410: "UTRAN Iu Interface: general aspects and principles".

[15] 3GPP TS 48.004: "Base Station System - Mobile-services Switching Centre (BSS - MSC) interface Layer 1 specification".

[16] 3GPP TS 48.006: "Signalling transport mechanism specification for the Base Station System - Mobile-services Switching Centre (BSS - MSC) interface".

[17] 3GPP TS 48.008: "Mobile-services Switching Centre - Base Station System (MSC - BSS) interface; Layer 3 specification".

[18] [void]

[19] 3GPP TS 48.051: "Base Station Controller - Base Transceiver Station (BSC - BTS) interface; General aspects".

[20] 3GPP TS 48.052: "Base Station Controller - Base Transceiver Station (BSC - BTS) interface; Interface principles".

[21] 3GPP TS 48.054: "Base Station Controller - Base Transceiver Station (BSC - BTS) interface; Layer 1 structure of physical circuits".

[22] 3GPP TS 48.056: "Base Station Controller - Base Transceiver Station (BSC - BTS) interface; Layer 2 specification".

[23] 3GPP TS 48.058: "Base Station Controller - Base Transceiver Station (BSC - BTS) interface; Layer 3 specification".

[24] 3GPP TS 48.060: "In-band control of remote transcoders and rate adaptors for full rate traffic channels".

[25] 3GPP TS 48.061: "In-band control of remote transcoders and rate adaptors for half rate traffic channels".

[26] 3GPP TS 29.002: "Mobile Application Part (MAP) specification".

[27] 3GPP TS 22.228: "Service requirements for the IP Multimedia Core Network Subsystem".

[28] 3GPP TS 23.207: "End-to-end Quality of Service (QoS) concept and architecture".

[29] 3GPP TS 23.125: "Overall high level functionality and architecture impacts of flow based charging; Stage 2".

[30] [void]

Microsoft - Exhibit 1012
Microsoft v. Lemko- IPR2023-00531
Page 87 of 203

[31] 3GPP TS 29.007: "General requirements on interworking between the Public Land Mobile Network (PLMN) and the Integrated Services Digital Network (ISDN) or Public Switched Telephone Network (PSTN)".

[32] 3GPP TS 29.010: "Information element mapping between Mobile Station - Base Station System (MS – BSS) and Base Station System - Mobile-services Switching Centre (BSS - MSC); Signalling procedures and the Mobile Application Part (MAP)".

[33] 3GPP TS 29.011: "Signalling interworking for supplementary services".

[34] 3GPP TS 23.228: "IP Multimedia Subsystem (IMS); Stage 2".

[35] 3GPP TR 41.103: "GSM Release 5 specifications".

[36] 3GPP TR 43.051: "Technical Specification Group GSM/EDGE Radio Access Network; Overall description, Stage 2".

[37] 3GPP TS 23.226: "Global Text Telephony (GTT); Stage 2".

[38] 3GPP TS 26.226: "Cellular Text Telephone Modem; General Description".

[39] 3GPP TS 23.016:"Subscriber data management; Stage 2".

[40] 3GPP TS 23.066: "Support of Mobile Number Portability (MNP); Technical realization; Stage 2".

[41] 3GPP TS 43.068: "Voice Group Call Service (VGCS); Stage 2".

[42] 3GPP TS 43.069: "Voice Broadcast Service (VBS); Stage 2".

[43] 3GPP TS 23.205: "Bearer independent circuit switched core network; Stage 2".

[44] 3GPP TS 48.014: "Base Station System (BSS) – Serving GPRS Support Node (SGSN) interface; Gb interface Layer 1".

[45] 3GPP TS 48.016: "Base Station System (BSS) – Serving GPRS Support Node (SGSN) interface; Network service".

[46] 3GPP TS 48.018: "Base Station System (BSS) – Serving GPRS Support Node (SGSN); BSS GPRS Protocol (BSSGP)".

[47] 3GPP TS 48.031: "Serving Mobile Location Centre – Serving Mobile Location Centre (SMLC – SMLC); SMLCPP specification".

[48] 3GPP TS 29.016: "Serving GPRS Support Node (SGSN) – Visitor Location Register (VLR); Gs interface network service specification".

[49] 3GPP TS 29.018: "Serving GPRS Support Node (SGSN) – Visitor Location Register (VLR); Gs interface Layer 3 specification".

[50] 3GPP TS 49.031: "Network Location Services (LCS); Base Station System Application Part LCS extension (BSSAP-LE)".

[51] 3GPP TS 29.060: "GPRS Tunnelling Protocol (GTP) across the Gn and Gp Interface".

[52] ITU-T Recommendation H.248: "Gateway Control Protocol".

[53] ITU-T Recommendation E.164: "The International public telecommunication numbering plan".

[54] ITU-T Recommendation H.323: "Packet-based multimedia communications systems".

[55] 3GPP TS 44.071: "Mobile radio interface layer 3 Location Services (LCS) specification".

[56] 3GPP TS 23.271: "Functional stage 2 description of LCS".

[57] ITU-T Recommendation I.363-2 :"B-ISDN ATM Adaptation Layer (AAL) type 2 specification".

[58] ITU-T Recommendation H.245: "Control protocol for multimedia communication".

Microsoft - Exhibit 1012
Microsoft v. Lemko- IPR2023-00531
Page 88 of 203

[59] IETF RFC 768: "User Datagram Protocol".

[60] IETF RFC 1889: "RTP: A Transport Protocol for Real-Time Applications".

[61] IETF RFC 3261: "SIP: Session Initiation Protocol".

[62] OMA MLP TS: "Mobile Location Protocol", [http://www.openmobilealliance.org/].

[63] 3GPP TS 29.198: "Open Service Access (OSA) Application Programming Interface (API)".

[64] 3GPP TS 33.210: "3G Security; Network Domain Security; IP network layer security".

[65] 3GPP TS 23.236: "Intra Domain Connection of RAN Nodes to Multiple CN Nodes".

[66] 3GPP TS 25.453: "UTRAN Iupc interface PCAP signalling".

[67] 3GPP TS 23.234: "3GPP system to Wireless Local Area Network (WLAN) interworking".

[68] 3GPP TS 23.141: "Presence Service; Architecture and functional description".

[69] OMA RLP TS: "Roaming Location Protocol", [http://www.openmobilealliance.org/].

[70] 3GPP TS 23.246: "Multimedia Broadcast/Multicast Service (MBMS); Architecture and functional description".

[71] 3GPP TS 23.240: "3GPP Generic User Profile (GUP); Architecture (Stage 2)".

[72] 3GPP TS 33.222: "Generic Authentication Architecture (GAA); Access to network application functions using Hypertext Transfer Protocol over Transport Layer Security (HTTPS)".

3 Definitions and abbreviations

In addition to the abbreviations given in the remainder of this clause others are listed in TR 21.905 [1a].

The definitions of the entities of the mobile system are given in the next subclause.

3.1 Public Land Mobile Network (PLMN)

A Public Land Mobile Network (PLMN) is established and operated by an administration or Recognized Private Operating Agency (RPOA) for the specific purpose of providing land mobile telecommunications service services to the public. A PLMN may be regarded as an extension of networks (e.g. ISDN, corporate and public PDNs, etc); it is a collection of MSCs areas in CS domain and SGSN areas in PS domain within a common numbering plan (e.g. same National Destination Code) and a common routing plan. The MSCs are the functional interfaces between the fixed networks and a PLMN for call set-up in CS domain. The GGSN and the SGSN are the functional interfaces between the fixed networks and a PLMN for packet transmission in PS domain.

Functionally the PLMNs may be regarded as independent telecommunications entities even though different PLMNs may be interconnected through the ISDN/PSTN and PDNs for forwarding of calls or network information. A similar type of interconnection may exist for the interaction between the MSCs/SGSNs of one PLMN.

3.2 Core Network (CN) and Access Network (AN)

The PLMN infrastructure is logically divided into a Core Network (CN) and an Access Network (AN) infrastructures, as defined in TS 23.101 [11a] and TS 23.110 [11b]. The CN is logically divided into a CS domain, a PS domain and an IM subsystem, as defined in next subclause. The AN is called BSS for GSM and RNS for UMTS, as defined in clause "The Access Network".

Microsoft - Exhibit 1012
Microsoft v. Lemko- IPR2023-00531
Page 89 of 203

3.3 Circuit Switched (CS) and Packet Switched (PS) Domains

The CN is constituted of a Circuit Switched (CS) domain and a Packet Switched (PS) domain. These two domains differ by the way they support user traffic, as explained below.

These two domains are overlapping, i.e. they contain some common entities. A PLMN can implement only one domain or both domains.

3.3.1 CS Domain

The CS domain refers to the set of all the CN entities offering "CS type of connection" for user traffic as well as all the entities supporting the related signalling. A "CS type of connection" is a connection for which dedicated network resources are allocated at the connection establishment and released at the connection release.

The entities specific to the CS domain are: MSC, GMSC, VLR. All the other CN entities defined in clause "4 The basic entities of the mobile system" and not defined as PS domain specific entities (see following subclause) are common to the CS and to the PS domains.

3.3.2 PS Domain

The PS domain refers to the set of all the CN entities offering "PS type of connection" for user traffic as well as all the entities supporting the related signalling. A "PS type of connection" transports the user information using autonomous concatenation of bits called packets: each packet can be routed independently from the previous one.

The entities specific to the PS domain are the GPRS specific entities, i.e. SGSN and GGSN. All the other CN entities defined in clause "4 The basic entities of the mobile system" and not defined as CS domain specific entities (see previous subclause) are common to the CS and to the PS domains.

3.3a IP Multimedia subsystem (IMS)

The IM subsystem comprises all CN elements for provision of IP multimedia services comprising audio, video, text, chat, etc. and a combination of them delivered over the PS domain. The entities related to IMS are CSCF, MGCF, MRF, etc. as defined in the stage 2 of the IM subsystem TS 23.228 [34]. See TS 22.228 [27] for some service examples of IMS.

3.4 Location register

To enable communication to a mobile station the network must know where this mobile station is located. This information is stored in a function named location register.

The location register is handled by four different entities.

- The Home Location Register (HLR).

The Home Location Register (HLR) is the location register to which a mobile subscriber is assigned for record purposes such as subscriber information.

- The Visitor Location Register (VLR).

The Visitor Location Register (VLR) is the location register for Circuit Switched (CS) services, other than the HLR, used by an MSC to retrieve information for, e.g. handling of calls to or from a roaming mobile station currently located in its area.

- The Serving GPRS Support Node (SGSN).

The location register function in the SGSN stores subscription information and location information for Packet Switched (PS) services for each subscriber registered in the SGSN.

The SGSN is needed only in a PLMN which supports GPRS.

- The Gateway GPRS Support Node (GGSN).

Microsoft - Exhibit 1012
Microsoft v. Lemko- IPR2023-00531
Page 90 of 203

The location register function in the GGSN stores subscription information and routeing information (needed to tunnel packet data traffic destined for a GPRS MS to the SGSN where the MS is registered) for each subscriber for which the GGSN has at least one PDP context active.

The GGSN is needed only in a PLMN which supports GPRS.

3.5 Cell

The cell is an area of radio coverage identified by a Base station identification as defined in TS 23.003 [3].

3.6 Base Station Controller (BSC) area

The Base Station Controller (BSC) area is an area of radio coverage consisting of one or more cells controlled by one BSC. The boundaries of a BSC area and a location area are independent; a location area may span the boundary between BSC area and a BSC area may span the boundary between location areas.

3.7 Radio Network Controller (RNC) area

The Radio Network Controller (RNC) area is an area of radio coverage consisting of one or more cells controlled by one RNC. The boundaries of a RNC area and a location area are independent; a location area may span the boundary between RNC area and a RNC area may span the boundary between location areas.

3.8 Location Area (LA)

The Location Area (LA) is defined as an area in which a mobile station may move freely without updating the VLR. A location area may include one or several cells.

3.9 Routing Area (RA)

The Routing Area (RA) is defined as an area in which a mobile station, in certain operation modes, may move freely without updating the SGSN. A routing area may include one or several cells. A RA is always contained within a location area.

3.10 MSC area

The MSC area is the part of the network covered by an MSC. An MSC area may consist of one or several location areas. An MSC area may also consist of one or several BSC areas.

3.11 VLR area

The VLR area is the part of the network controlled by a VLR. A VLR area may consist of one or several MSC areas.

3.12 SGSN area

The SGSN area is the part of the network served by an SGSN. An SGSN area may consist of one or several routing areas. An SGSN area may also consist of one or several BSC areas. There need not be a one to one relationship between SGSN area and MSC/VLR area.

3.13 Zones for Regional Subscription

A PLMN operator may define a number of regional subscription areas, each of which is a subset of the service area for an unrestricted mobile subscriber. A regional subscription area may be contained within the service area of a single

Microsoft - Exhibit 1012
Microsoft v. Lemko- IPR2023-00531
Page 91 of 203

PLMN, or may lie within the service areas of two or more PLMNs. Each regional subscription area consists of one or more zones; each zone is contained within the service area of a PLMN.

The definition of a mobile subscriber's regional subscription area is stored within the HLR per National Destination Code(s) (NDC) of a PLMN and is transferred to the VLRs and/or SGSNs of that PLMN. The VLR and/or SGSN evaluates this information to extract the restricted or accessible MSC and/or SGSN areas and location areas to which the mobile subscriber is allowed to roam. The VLR and/or SGSN informs the HLR if an entire MSC and/or SGSN area is restricted.

Zones for Regional Subscription and their handling are defined in TS 23.003 [3], TS 23.008 [5] and TS 29.002 [26].

3.14 Service area

The service area is defined as an area in which a mobile subscriber can be reached by another (mobile or fixed) subscriber without the subscriber's knowledge of the actual location of the mobile station within the area. A service area may consist of several PLMNs. One service area may consist of one country, be a part of a country or include several countries. The location registration system associated with each service area must thus contain a list of all mobile stations located within that service area.

3.15 Group call area

The group call area is a predefined area composed of one or a number of cells to which a particular Voice Group Call Service (VGCS) or Voice Broadcast Service (VBS) call is distributed. The composition of a group call area is predefined in the network. The group call area may include cells of more than one MSC area and cells of more than one PLMN.

3.16 Pool-area

A pool area is an area where Intra Domain Connection of RAN Nodes to Multiple CN Nodes is applied. Within a pool-area an MS may roam without need to change the serving Core Network (CN) node. A pool-area is served by one or more CN nodes in parallel.

4 The basic entities of the mobile system

To provide the mobile service as it is defined, it is necessary to introduce some specific functions. These functional entities can be implemented in different equipments or gathered. In any case, exchanges of data occur between these entities.

4.1 The Core Network (CN) entities

4.1.1 Entities common to the PS and CS domains

4.1.1.1 The Home Subscriber Server (HSS)

The HSS is the master database for a given user. It is the entity containing the subscription-related information to support the network entities actually handling calls/sessions.

A Home Network may contain one or several HSSs: it depends on the number of mobile subscribers, on the capacity of the equipment and on the organisation of the network.

As an example, the HSS provides support to the call control servers in order to complete the routing/roaming procedures by solving authentication, authorisation, naming/addressing resolution, location dependencies, etc.

The HSS is responsible for holding the following user related information:

- User Identification, Numbering and addressing information;

Microsoft - Exhibit 1012
Microsoft v. Lemko- IPR2023-00531
Page 92 of 203

- User Security information: Network access control information for authentication and authorization;
- User Location information at inter-system level: the HSS supports the user registration, and stores inter-system location information, etc.;
- User profile information.

The HSS also generates User Security information for mutual authentication, communication integrity check and ciphering.

Based on this information, the HSS also is responsible to support the call control and session management entities of the different Domains and Subsystems (defined in section 3.3 and 3.3a) of the operator as shown in figure 0-a.

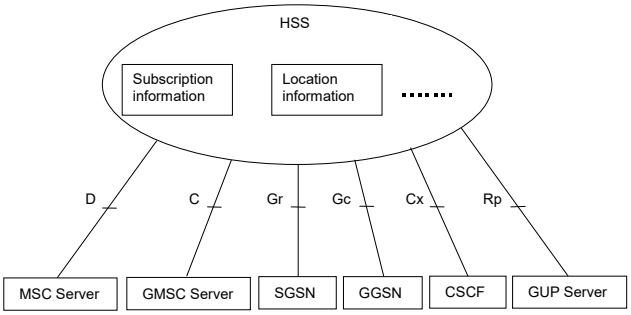

Figure 0-a: Example of a Generic HSS structure and basic interfaces

The HSS may integrate heterogeneous information, and enable enhanced features in the core network to be offered to the application & services domain, at the same time hiding the heterogeneity.

The HSS consists of the following functionalities:

- IP multimedia functionality to provide support to control functions of the IM subsystem such as the CSCF. It is needed to enable subscriber usage of the IM CN subsystem services. This IP multimedia functionality is independent of the access network used to access the IM CN subsystem.
- The subset of the HLR/AUC functionality required by the PS Domain.
- The subset of the HLR/AUC functionality required by the CS Domain, if it is desired to enable subscriber access to the CS Domain or to support roaming to legacy GSM/UMTS CS Domain networks.

The HSS is considered as GUP Data Repository for IM CN Subsystem user related data. The RAF (Repository Access Function) provides the Rp reference point as described in TS 23.240 [71].

The organisation of the subscriber data is outlined in TS 23.008 [5]. It also indicates which numbers, addresses and identifiers specified in TS 23.003 [3] are stored in HSS.

4.1.1.1.1 The Home Location Register (HLR)

The HLR is shown in the Reference Architecture up to and including Rel-4.

The HLR can be considered a subset of the HSS that holds the following functionality:

- The functionality required to provide support to PS Domain entities such as the SGSN and GGSN, through the Gr and Gc interfaces and the 3GPP AAA Server for the I-WLAN through the D'/Gr' interface. It is needed to enable subscriber access to the PS Domain services.

Microsoft - Exhibit 1012
Microsoft v. Lemko- IPR2023-00531
Page 93 of 203

- The functionality required to provide support to CS Domain entities such as the MSC/MSC server and GMSC/GMSC server, through the C and D interfaces. It is needed to enable subscriber access to the CS Domain services and to support roaming to legacy GSM/UMTS CS Domain networks.

4.1.1.1.2 The Authentication Centre (AuC)

The AuC is shown in the Reference Architecture up to and including Rel-4.

The AuC can be considered a subset of the HSS that holds the following functionality for the CS Domain and PS Domain:

- The AuC is associated with an HLR and stores an identity key for each mobile subscriber registered with the associated HLR. This key is used to generate security data for each mobile subscriber:
  - data which are used for mutual authentication of the International Mobile Subscriber Identity (IMSI) and the network;
  - a key used to check the integrity of the communication over the radio path between the mobile station and the network;
  - a key used to cipher communication over the radio path between the mobile station and the network.
- The AuC communicates only with its associated HLR over a non-standardised interface denoted the H-interface. The HLR requests the data needed for authentication and ciphering from the AuC via the H-interface, stores them and delivers them to the VLR and SGSN which need them to perform the security functions for a mobile station.

4.1.1.1.3 HSS logical functions

This section provides a high level and not exhaustive description of HSS functionality.

Microsoft - Exhibit 1012
Microsoft v. Lemko- IPR2023-00531
Page 94 of 203

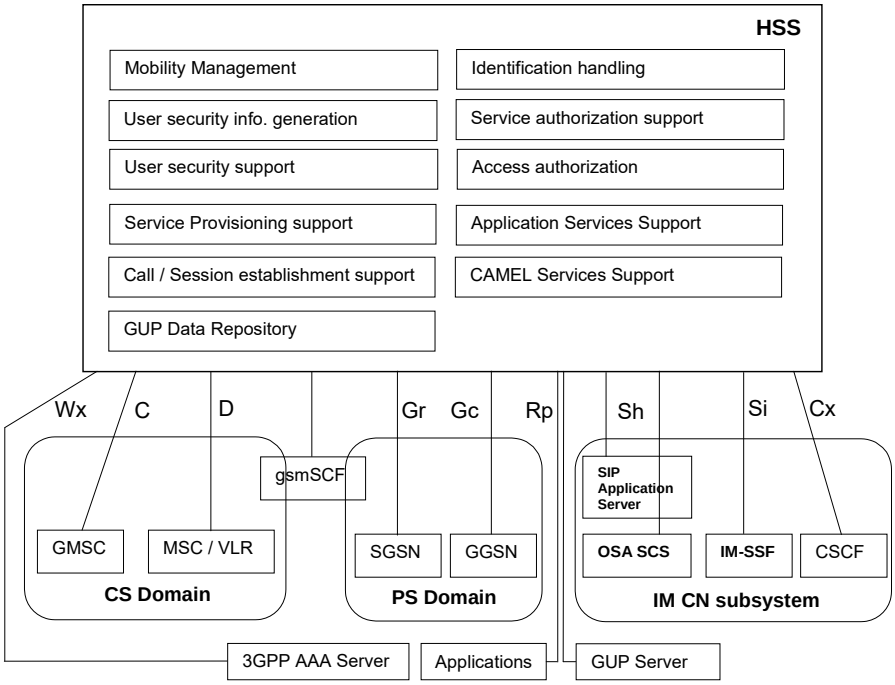

Figure 0.b – HSS logical functions

- Mobility Management

  This function supports the user mobility through CS Domain, PS Domain and IM CN subsystem.

- Call and/or session establishment support

  The HSS supports the call and/or session establishment procedures in CS Domain, PS Domain and IM CN subsystem. For terminating traffic, it provides information on which call and/or session control entity currently hosts the user.

- User security information generation

- The HSS generates user authentication, integrity and ciphering data for the CS and PS Domains and for the IM CN subsystem. User security support

  The HSS supports the authentication procedures to access CS Domain, PS Domain and IM CN subsystem services by storing the generated data for authentication, integrity and ciphering and by providing these data to the appropriate entity in the CN (i.e. MSC/VLR, SGSN, 3GPP AAA Server or CSCF).

- User identification handling

  The HSS provides the appropriate relations among all the identifiers uniquely determining the user in the system: CS Domain, PS Domain and IM CN subsystem (e.g. IMSI and MSISDNs for CS Domain; IMSI, MSISDNs and IP addresses for PS Domain, private identity and public identities for IM CN subsystem).

- Access authorisation

  The HSS authorises the user for mobile access when requested by the MSC/VLR, SGSN, 3GPP AAA Server or CSCF, by checking that the user is allowed to roam to that visited network.

Microsoft - Exhibit 1012
Microsoft v. Lemko- IPR2023-00531
Page 95 of 203

- Service authorisation support

  The HSS provides basic authorisation for MT call/session establishment and service invocation. Besides, the HSS updates the appropriate serving entities (i.e., MSC/VLR, SGSN, 3GPP AAA Server, CSCF) with the relevant information related to the services to be provided to the user.

- Service Provisioning Support

- The HSS provides access to the service profile data for use within the CS Domain, PS Domain and/or IM CN subsystem.Application Services and CAMEL Services Support

  The HSS communicates with the SIP Application Server and the OSA-SCS to support Application Services in the IM CN subsystem. It communicates with the IM-SSF to support the CAMEL Services related to the IM CN subsystem. It communicates with the gsmSCF to support CAMEL Services in the CS Domain and PS Domain.

- GUP Data Repository

  The HSS supports the storage of IM CN Subsystem user related data, and provides access to these data through the Rp reference point.

4.1.1.2 The Visitor Location Register (VLR)

A mobile station roaming in an MSC area or within a pool-area is controlled by a Visitor Location Register. When a Mobile Station (MS) enters a new location area it starts a registration procedure. An MSC in charge of that area notices this registration and transfers to a Visitor Location Register the identity of the location area where the MS is situated. If this MS is not yet registered in the VLR, the VLR and the HLR exchange information to allow the proper handling of calls involving the MS.

A VLR may be in charge of one or several MSC areas.

The VLR contains also the information needed to handle the calls set-up or received by the MSs registered in its data base (for some supplementary services the VLR may have to obtain additional information from the HLR). The following elements are included:

- the International Mobile Subscriber Identity (IMSI);
- the Mobile Station International ISDN number (MSISDN);
- the Mobile Station Roaming Number (MSRN), see TS 23.003 [3] for allocation principles;
- the Temporary Mobile Station Identity (TMSI), if applicable;
- the Local Mobile Station Identity (LMSI), if used;
- the location area where the mobile station has been registered;
- the identity of the SGSN where the MS has been registered. Only applicable to PLMNs supporting GPRS and which have a Gs interface between MSC/VLR and SGSN;
- the last known location and the initial location of the MS.

The VLR also contains supplementary service parameters attached to the mobile subscriber and received from the HLR. The organisation of the subscriber data is outlined in TS 23.008 [5].

4.1.1.3 (void)

4.1.1.4 The Equipment Identity Register (EIR)

The Equipment Identity Register (EIR) in the GSM system is the logical entity which is responsible for storing in the network the International Mobile Equipment Identities (IMEIs), used in the GSM system.

The equipment is classified as "white listed", "grey listed", "black listed" or it may be unknown as specified in TS 22.016 [2] and TS 29.002 [26].

This functional entity contains one or several databases which store(s) the IMEIs used in the GSM system.

Microsoft - Exhibit 1012
Microsoft v. Lemko- IPR2023-00531
Page 96 of 203

The mobile equipment may be classified as "white listed", "grey listed" and "black listed" and therefore may be stored in three separate lists.

An IMEI may also be unknown to the EIR.

An EIR shall as a minimum contain a "white list" (Equipment classified as "white listed").

See also TS 22.016 [2] on IMEI.

4.1.1.5 SMS Gateway MSC (SMS-GMSC)

The SMS Gateway MSC (SMS-GMSC) acts as an interface between a Short Message Service Centre and the PLMN, to allow short messages to be delivered to mobile stations from the Service Centre (SC).

The choice of which MSCs can act as SMS Gateway MSCs is a network operator matter (e.g. all MSCs or some designated MSCs).

4.1.1.6 SMS Interworking MSC (SMS-IWMSC)

The SMS Interworking MSC acts as an interface between the PLMN and a Short Message Service Centre (SC) to allow short messages to be submitted from Mobile Stations to the SC.

The choice of which MSCs can act as SMS Interworking MSCs is a network operator matter (e.g. all MSCs or some designated MSCs).

4.1.1.7 Subscription Locator Function (SLF)

The SLF:

- Is queried by the I-CSCF during the Registration and Session Setup to get the name of the HSS containing the required subscriber specific data. Furthermore the SLF is also queried by the S-CSCF during the Registration.
- Is queried by the AS in conjunction with the Sh interface operation to get the name of the HSS containing the required subscriber specific data.
- Is queried by the 3GPP AAA server to get the name of the HSS containing the required subscriber specific data.
- Is accessed via the Dx interface by the CSCF, via the Dh interface by the AS, and via the Dw interface by the 3GPP AAA Server.

The SLF is not required in a single HSS environment. An example for a single HSS environment is a server farm architecture. Use of SLF is not required when AS are configured/managed to use pre-defined HSS.

4.1.2 Entities of the CS domain

4.1.2.1 The Mobile-services Switching Centre (MSC)

The Mobile-services Switching Centre (MSC) constitutes the interface between the radio system and the fixed networks. The MSC performs all necessary functions in order to handle the circuit switched services to and from the mobile stations.

In order to obtain radio coverage of a given geographical area, a number of BSS and/or RNSare normally required; i.e. each MSC would thus have to interface to one or more BSS(s) and/or RNS(s). In addition several MSCs may be required to cover a country.

When Intra Domain Connection of RAN Nodes to Multiple CN Nodes is applied, all the MSCs serving a pool-area share the responsibility to serve the MSs located in the pool-area. All these MSCs interface to all the BSS(s) and/or RNS(s) forming the pool-area.

The Mobile-services Switching Centre is an exchange, which performs all the switching and signalling functions for mobile stations located in a geographical area designated as the MSC area. When Intra Domain Connection of RAN Nodes to Multiple CN Nodes is applied, one or more MSCs serve a pool-area, but each individual MS is served by only one out of these MSCs, as described in TS 23.236 [65]. The main difference between a MSC and an exchange in a fixed

Microsoft - Exhibit 1012
Microsoft v. Lemko- IPR2023-00531
Page 97 of 203

network is that the MSC has to take into account the impact of the allocation of radio resources and the mobile nature of the subscribers and has to perform in addition, at least the following procedures:

- procedures required for the location registration (see TS 23.012 [7]);
- procedures required for handover (see TS 23.009 [6]).

NOTE: When this improves the readibility (e.g. when dealing with inter-releases handover), the term 2G-MSC can be used to refer to an MSC Release 98 or prior, and the term 3G-MSC can be used to refer to an MSC Release 99 or later.

When needed, the MSC can be implemented in two different entities: the MSC Server, handling only signalling, and the CS-MGW, handling user's data. A MSC Server and a CS-MGW make up the full functionality of a MSC.

4.1.2.1.1 MSC Server

The MSC Server mainly comprises the call control (CC) and mobility control parts of a MSC.

The MSC Server is responsible for the control of mobile originated and mobile terminated CC CS Domain calls. It terminates the user-network signalling and translates it into the relevant network – network signalling. The MSC Server also contains a VLR to hold the mobile subscriber's service data and CAMEL related data.

The MSC Server controls the parts of the call state that pertain to connection control for media channels in a CS-MGW.

4.1.2.1.2 Circuit Switched - Media Gateway Function (CS-MGW)

NOTE: In this document the term Media Gateway Function (MGW) is used when there is no need to differentiate between the CS domain entity and the IP Multimedia CN Subsystem entity. When refering specifically to the CS domain entity the term CS-MGW is used. When refering specifically to the IP Multimedia CN Subsystem entity, the term IMS-MGW is used.

This component is PSTN/PLMN transport termination point for a defined network and interfaces UTRAN with the core network over Iu.

A CS-MGW may terminate bearer channels from a switched circuit network and media streams from a packet network (e.g. RTP streams in an IP network). Over Iu, the CS-MGW may support media conversion, bearer control and payload processing (e.g. codec, echo canceller, conference bridge) for support of different Iu options for CS services (AAL2/ATM based as well as RTP/UDP/IP based).

The CS-MGW:

- Interacts with MGCF, MSC server and GMSC server for resource control.
- Owns and handles resources such as echo cancellers etc.
- May need to have codecs.

The CS-MGW will be provisioned with the necessary resources for supporting UMTS/GSM transport media. Further tailoring (i.e packages) of the H.248 [52] may be required to support additional codecs and framing protocols, etc.

The CS-MGW bearer control and payload processing capabilities will also need to support mobile specific functions such as SRNS relocation/handover and anchoring. It is expected that current H.248 [52] standard mechanisms can be applied to enable this.

4.1.2.2 The Gateway MSC (GMSC)

If a network delivering a call to the PLMN cannot interrogate the HLR, the call is routed to an MSC. This MSC will interrogate the appropriate HLR and then route the call to the MSC where the mobile station is located. The MSC which performs the routing function to the actual location of the MS is called the Gateway MSC (GMSC).

The acceptance of an interrogation to an HLR is the decision of the operator.

The choice of which MSCs can act as Gateway MSCs is for the operator to decide (i.e. all MSCs or some designated MSCs).

Microsoft - Exhibit 1012
Microsoft v. Lemko- IPR2023-00531
Page 98 of 203

If the call is a voice group/broadcast call, it is routed directly from the GMSC to the VBS/VGCS Anchor MSC, based on information (VBS/VGCS call reference) contained in the dialled number (see also TS 43.068 [41] and TS 43.069 [42]).

Editor's note: There is a need to consider possibilities that call incoming to the PLMN may be routed to entities other than the GMSC, e.g., for networks that do not deploy CS domain.

When needed, the GMSC can be implemented in two different entities: the GMSC Server, handling only signalling, as defined below, and the CS-MGW, defined above. A GMSC Server and a CS-MGW make up the full functionality of a GMSC.

4.1.2.2.1 Gateway MSC Server (GMSC Server)

The GMSC server mainly comprises the call control and mobility control parts of a GMSC.

4.1.2.3 The Interworking Function (IWF)

The Interworking Function (IWF) is a functional entity associated with the MSC. The IWF provides the functionality necessary to allow interworking between a PLMN and the fixed networks (ISDN, PSTN and PDNs). The functions of the IWF depend on the services and the type of fixed network. The IWF is required to convert the protocols used in the PLMN to those used in the appropriate fixed network. The IWF may have no functionality where the service implementation in the PLMN is directly compatible with that at the fixed network. The interworking functions are described in TS 29.007 [31].

4.1.3 Entities of the PS domain

The UMTS PS-domain (or GPRS) Support Nodes (GSN) are the Gateway GSN (GGSN) and the Serving GSN (SGSN). They constitute the interface between the radio system and the fixed networks for packet switched services. The GSN performs all necessary functions in order to handle the packet transmission to and from the mobile stations.

4.1.3.1 Serving GPRS Support Node (SGSN)

The location register function in the SGSN stores two types of subscriber data needed to handle originating and terminating packet data transfer:

- subscription information:
  - the IMSI;
  - one or more temporary identities;
  - zero or more PDP addresses.
- location information:
  - depending on the operating mode of the MS, the cell or the routeing area where the MS is registered;
  - the VLR number of the associated VLR (if the Gs interface is implemented);
  - the GGSN address of each GGSN for which an active PDP context exists.

The organisation of the subscriber data in the SGSN is defined in TS 23.008 [5] and TS 23.060 [9a].

The procedures for information transfer between the SGSN, the GGSN, the VLR and the HLR are defined in TS 23.016 [39] and TS 23.060 [9a].

NOTE: When this improves the readibility (e.g. when dealing with inter-releases handover), the term 2G-SGSN can be used to refer to an MSC Release 98 or prior, and the term 3G-SGSN can be used to refer to an MSC Release 99 or later.

Microsoft - Exhibit 1012
Microsoft v. Lemko- IPR2023-00531
Page 99 of 203

4.1.3.2 Gateway GPRS Support Node (GGSN)

The location register function in the GGSN stores subscriber data received from the HLR and the SGSN. There are two types of subscriber data needed to handle originating and terminating packet data transfer:

- subscription information:
  - the IMSI;
  - zero or more PDP addresses.
- location information:
  - the SGSN address for the SGSN where the MS is registered.

The organisation of the subscriber data in the GGSN is defined in TS 23.008 [5] and TS 23.060 [9a].

The procedures for information transfer between the GGSN, the SGSN and the HLR are defined in TS 23.016 [39] and TS 23.060 [9a].

4.1.3.3 Border Gateway (BG)

The Border Gateway (BG) is a gateway between a PLMN supporting GPRS and an external inter-PLMN backbone network used to interconnect with other PLMNs also supporting GPRS. The role of the BG is to provide the appropriate level of security to protect the PLMN and its subscribers.

The BG is only needed in PLMNs supporting GPRS.

4.2 The Access Network (AN) entities

Two different types of access network are used by the CN: the Base Station System (BSS) and the Radio Network System (RNS). The MSC (resp. SGSN) can connect to one of these Access Network type or to both of them.

The access technologies offered by the BSS are described in the 45-series of 3GPP specifications. The access technologies offered by the RNS (FDD, TDD) are described in the 25-series of 3GPP specifications.

4.2.1 The Base Station System (BSS)

The Base Station System (BSS) is the system of base station equipments (transceivers, controllers, etc...) which is viewed by the MSC through a single A and/or Iu-CS interface as being the entity responsible for communicating with Mobile Stations in a certain area. Similarly, in PLMNs supporting GPRS, the BSS is viewed by the SGSN through a single Gb or Iu-PS interface. When Intra Domain Connection of RAN Nodes to Multiple CN Nodes is applied, a BSS may connect to several MSCs by several A and/or Iu-CS interfaces, and a BSS may connect to several SGSNs by several Gb and/or Iu-PS interfaces. The functionality for the A interface is described in TS 48.002 [14] and for the Gb interface in TS 23.060 [9a]. The functionality for the Iu-CS interface is described in TS 25.410 [14a] and for the Iu-PS interface in TS 23.060 [9a].

The radio equipment of a BSS may support one or more cells. A BSS may consist of one or more base stations. Where an Abis-interface is implemented, the BSS consists of one Base Station Controller (BSC) and one or more Base Transceiver Station (BTS). The split of functions between BSS and CN for a Iu interface is desribed in the 25-series of UMTS Technical Specifications.

The split of functions between BSS and CN for a A/Gb interface is described in the 48-series of GSM Technical Specifications. The split of functions between BSS and CN for a Iu interface is desribed in the 25-series of UMTS Technical Specifications.

NOTE: The mobile station shall operate using only the following modes:

a **A / G_b mode**, e.g. for pre-Release 4 terminals, or for Release 4 terminals when connected to a BSS with no Iu interface towards the Core Network.

b **Iu mode** (i.e. Iu-CS and Iu-PS), e.g. for Release 4 terminals when connected to a BSS with Iu interfaces towards the Core Network.

Microsoft - Exhibit 1012
Microsoft v. Lemko- IPR2023-00531
Page 100 of 203

No other modes (e.g. A/Iu-PS or Iu-CS/Gb) shall be allowed.

See also TS 43.051 [36].

4.2.1.1 Base Station Controller (BSC)

A Base Station Controller (BSC) is a network component in the PLMN with the functions for control of one or more BTS.

4.2.1.2 Base Transceiver Station (BTS)

A Base Transceiver Station (BTS) is a network component which serves one cell.

4.2.2 The Radio Network System (RNS)

The Radio Network System (RNS) is the system of base station equipments (transceivers, controllers, etc...) which is viewed by the MSC through a single Iu-interface as being the entity responsible for communicating with Mobile Stations in a certain area. Similarly, in PLMNs supporting GPRS, the RNS is viewed by the SGSN through a single Iu-PS interface. When Intra Domain Connection of RAN Nodes to Multiple CN Nodes is applied, an RNS may connect to several MSCs by several Iu-CS interfaces, and an RNS may connect to several SGSNs by several Iu-PS interfaces. The functionality for the Iu-CS interface is described in TS 25.410 [14a] and for the Iu-PS interface in TS 23.060 [9a]. The radio equipment of a RNS may support one or more cells. A RNS may consist of one or more base stations. The RNS consists of one Radio Network Controller (RNC) and one or more Node B.

The split of functions between RNS and CN is described in the 25-series of UMTS Technical Specifications.

4.2.2.1 Radio Network Controller (RNC)

A Radio Network Controller (RNC) is a network component in the PLMN with the functions for control of one or more Node B.

4.2.2.2 Node B

A Node B is a logical network component which serves one or more cells.

4.3 The Mobile Station (MS)

The mobile station consists of the physical equipment used by a PLMN subscriber; it comprises the Mobile Equipment (ME) and the Subscriber Identity Module (SIM), called UMTS Subscriber Identity Module (USIM) for Release 99 and following. The ME comprises the Mobile Termination (MT) which, depending on the application and services, may support various combinations of Terminal Adapter (TA) and Terminal Equipment (TE) functional groups. These functional groups are described in TS 44.002 [12].

Editor's note: an input is expected to introduce the UE (User Equipment) definition and clarify the difference between MS and UE.

4a The specific entities of the mobile system

The entities presented in this clause are dedicated to the provisionning of a given (set of) service(s). The fact that they are implemented or not in a given PLMN should have limited impact on all the other entities of the PLMN.

All the specific entities defined so far are located in the Core Network.

4a.1 The Group Call Register (GCR) entity

The Group Call Register (GCR) is a register holding information about VGCS or VBS calls, the voice group or broadcast call attributes, respectively.

Microsoft - Exhibit 1012
Microsoft v. Lemko- IPR2023-00531
Page 101 of 203

Voice group or broadcast call attributes are defined for a specific voice group or broadcast call reference and include the data required to configure the conference bridge for a VGCS or VBS call and other call related attributes.

The Group Call Register (GCR) shall hold for a related MSC area for each group ID and cell from which Voice Group Call Service (VGCS) or Voice Broadcast Service (VBS) calls can be established by mobile stations the voice group call reference or voice broadcast call reference to be used for a VGCS or VBS call to be established and an indication whether the originating MSC is the MSC responsible for that call.

If the originating MSC is not responsible for that call, the GCR shall hold the routing information identifying the MSC responsible for that call.

A GCR may be in charge of one or several MSC. Each MSC involved in a voice group or broadcast call requests its proper voice group or broadcast call attributes from its related GCR by use of the voice group or broadcast call reference.

The contents of each list related to requests of the MSC responsible for a voice group or broadcast call is as follows:

- a list of cells inside the MSC area of the requesting MSC into which the call is to be sent (part of the group call area);
- a list of other MSCs into which the call is to be sent;
- a list of identities of dispatchers to which a dedicated link is to be established;
- a list of identities of dispatchers which are allowed to initiate the voice group or broadcast call;
- a list of identities of dispatchers which are allowed to terminate the voice group or broadcast call;
- the length of time over which no activity is detected before the voice group call is automatically terminated;
- the default priority level related to the voice group or broadcast call if the eMLPP supplementary service applies;
- a flag indicating if acknowledgements are required for this voice group or broadcast call.

The contents of each list related to requests of an MSC not responsible for a voice group or broadcast call is as follows:

- a list of cells inside the MSC area of the requesting MSC into which the call is to be sent (part of the group call area).

More information is provided in TS 43.068 [41] and TS 43.069 [42].

4a.2 (void)

4a.3 The Location Services (LCS) entities

This section describes the Location Services entities found in the Core Network and Radio Access Network that support positioning methods for the UE/MS.

For further details on LCS in UMTS and GSM from system and core network point view, see TS 23.271 [56].

For further details on LCS in UTRAN, see TS 25.305 [10b].

For further details on LCS in GERAN, see TS 43.059 [10d].

4a.3.1 Location Services (LCS) entities in RAN

The RAN (UTRAN and GERAN) supports one or more UE/MS positioning methods to calculate the geographical position of the UE/MS and responds to the UE/MS location request received from the CN. The RAN may broadcast LCS assistance data to Ues/MSs under its coverage. In case this assistance data is ciphered, the ciphering key is provided by the CN to the UE/MS.

To support UE positioning methods, the RAN is made of several entities like:

Microsoft - Exhibit 1012
Microsoft v. Lemko- IPR2023-00531
Page 102 of 203

BSC/SRNC: the BSC for GERAN and SRNC for UTRAN receive authenticated location requests from the CN:

- In UTRAN, the SRNC co-ordinates the positioning requests taking into account their priority and it selects the positioning method to fulfil the requested accuracy. It interfaces, when necessary, with the CRNC which mainly manages resources allocated to UE positioning operations and requests UE Positioning related measurements from its associated Node Bs and LMUs.
- In GERAN, the BSC passes the location request to the SMLC.

SMLC:

- The Serving Mobile Location Center (SMLC) function can be part of the RNC or be a SAS (Stand-Alone SMLC) for UTRAN. The SMLC function can be part of the BSC or be in a separate SMLC server for GERAN.
- In UTRAN, the SMLC function provides assistance data to the RNC and acts as a location calculation server if the location estimates are not to be calculated in the RNC.
- In GERAN, the SMLC function co-ordinates the positioning request, schedules resources required to perform positioning of a mobile, and calculates the final location estimate and accuracy. The SMLC may control a number of LMUs.

LMU: The Location Measurement Unit (LMU) entity makes measurements for one or more positioning methods.

Node B: Node B is a network element of UTRAN that may provide measurement results for position estimation and makes measurements of radio signals.

CBC: The Cell Broadcast Center, in GERAN, the SMLC function may interface a CBC in order to broadcast assistance data using existing cell broadcast capabilities.

For detail on Location services, entities and interfaces provided by UTRAN, see TS 25.305 [10b].

For detail on Location services, entities and interfaces provided by GERAN, see TS 43.059 [10d].

4a.3.2 Gateway Mobile Location Center (GMLC)

The Gateway Mobile Location Center (GMLC) is the first node an external Location Application accesses in the GSM PLMN. The GMLC performs registration authorization and requests routing information from the HLR. There may be more than one GMLC in a PLMN.

4a.3.3 Location Measurement Unit (LMU)

An LMU makes radio measurements to support one or more positioning methods.

Two types of LMU are defined:

- Type A LMU: accessed over the normal GSM air interface;
- Type B LMU: accessed over the base station to controller interface (Abis in GSM and Iub in UMTS).

A type A LMU is accessed exclusively over the GSM air interface (Um interface): there is no wired connection to any other network element.

In GSM, a type A LMU has a serving BTS and BSC that provide signaling access to a controlling SMLC. With an NSS based SMLC, a type A LMU also has a serving MSC and VLR and a subscription profile in an HLR. A type A LMU always has a unique IMSI and supports all radio resource and mobility management functions of the GSM air interface that are necessary to support signaling using an SDCCH to the SMLC. A type A LMU supports those connection management functions necessary to support LCS signaling transactions with the SMLC and may support certain call control functions of to support signaling to an SMLC using a circuit switched data connection.

In UMTS, a type A LMU has signaling access to the SRNC. Type A LMU is not supported in UMTS release 1999.

In GSM, a Type B LMU is accessed over the Abis interface from a BSC. The LMU may be either a standalone network element addressed using some pseudo-cell ID or connected to or integrated in a BTS. Signaling to a Type B LMU is by

Microsoft - Exhibit 1012
Microsoft v. Lemko- IPR2023-00531
Page 103 of 203

means of messages routed through the controlling BSC for a BSS based SMLC or messages routed through a controlling BSC and MSC for an NSS based SMLC.

In UMTS, a Type B LMU is accessed over the Iub interface from an RNC. The LMU may be either a standalone network element addressed using some pseudo-cell ID or connected to or integrated in a Node B.

4a.4 CAMEL entities

The entities of this subclause support the CAMEL feature (Customised Applications for Mobile network Enhanced Logic). This feature provides the mechanisms to support services consistently independently of the serving network, as described in TS 22.078 [2c]. The following definitions are extracted from TS 23.078 [10c], which completely specifies CAMEL stage 2.

4a.4.1 GSM Service Control Function (gsmSCF)

A functional entity that contains the CAMEL service logic to implement Operator Specific Service. It interfaces with the gsmSSF, the gsmSRF and the HLR.

4a.4.2 GSM Service Switching Function (gsmSSF)

A functional entity that interfaces the MSC/GMSC to the gsmSCF. The concept of the gsmSSF is derived from the IN SSF, but uses different triggering mechanisms because of the nature of the mobile network.

4a.4.3 GSM Specialised Resource Function (gsmSRF)

A functional entity which provides various specialized resources. It interfaces with the gsmSCF and with the MSC. This entity is defined in ITU-T Q.1214 [11] with variations defined in TS 23.078 [10c].

4a.4.4 GPRS Service Switching Function (gprsSSF)

A functional entity that interfaces the SGSN to the gsmSCF. The concept of the gprsSSF is derived from the IN SSF, but uses different triggering mechanisms because of the nature of the mobile network.

4a.5 CBS-specific entities

The cell broadcast service (CBS) is a Teleservice which enables an Information Provider to submit short messages for broadcasting to a specified area within the PLMN. TS 23.041 [8] contains the technical realization of the service.

4a.5.1 Cell Broadcast Center (CBC)

The CBC shall be responsible for the management of CBS messages and for determining the CBS delivery parameters of the RNS. The CBC may be connected to several BSCs/RNCs. In UMTS the CBC is regarded to be integrated as a node into the core network.

NOTE: Whether it should be possible that an RNC is connected to at least two CBCs at the same time (the "normal" one as in GSM and a second one for LCS) is for further study and depents on the solution taken for LCS.

4a.6 Number Portability Specific entities

Two different solutions are defined to support Number Portability. The first one is an IN based solution and is described in the next subclause. The second one is a "Signalling Relay" based solution described in next but one subclause.

For details on MNP see TS 23.066 [40].

Microsoft - Exhibit 1012
Microsoft v. Lemko- IPR2023-00531
Page 104 of 203

4a.6.1 IN-based solution: Number Portability Database (NPDB)

The Number Portability Database (NPDB) is the central element of the IN based solution for Mobile Number Portability (MNP). MNP is the ability for a mobile subscriber to change the GSM subscription network within a portability cluster (e.g. a country) whilst retaining his/her original MSISDN or MSISDNs.

The NPDB stores the table of correspondence between MSISDNs and Subscription networks. Upon request of the (gateway or visited) MSC, the NPDB retrieves from the MSISDN the Routing Number pointing out the Subscription network.

4a.6.2 Signalling Relay-based solution: Mobile Number Portability/Signalling Relay function (MNP-SRF)

The MNP-Signalling Relay Function (MNP-SRF) is the central element of the Signalling Relay based solution for Mobile Number Portability.

The MNP-SRF obtains the routing information from a NP database to identify the subscription network associated with a particular national MSISDN. Upon request from gateway MSC, the MNP-SRF may perform one of the following actions:

1. the MNP-SRF will reply back to the GMSC with the necessary routing information to route the call;
2. the message is relayed to the HLR;
3. the message is relayed to MNP-SRF in the subscription network.

For non-call related signalling (e.g. delivery of SMS), only cases 2 and 3 are applicable.

4a.7 IP Multimedia (IM) Core Network (CN) Subsystem entities

4a.7.1 Call Session Control Function (CSCF)

The CSCF can act as Proxy CSCF (P-CSCF), Serving CSCF (S-CSCF) or Interrogating CSCF (I-CSCF). The P-CSCF is the first contact point for the UE within the IM subsystem (IMS); the S-CSCF actually handles the session states in the network; the I-CSCF is mainly the contact point within an operator's network for all IMS connections destined to a subscriber of that network operator, or a roaming subscriber currently located within that network operator's service area. Further definitions of the P-, S- and I-CSCF are provided in TS 23.228 [34].

4a.7.2 Media Gateway Control Function (MGCF)

The MGCF:

- Controls the parts of the call state that pertain to connection control for media channels in an IMS-MGW.
- Communicates with CSCF, BGCF, and PSTN entities.
- Determines the next hop depending on the routing number for incoming calls from legacy networks.
- Performs protocol conversion between ISUP/TCAP and the IM subsystem call control protocols.
- Out of band information received in MGCF may be forwarded to CSCF/IMS-MGW.

4a.7.3 IP Multimedia Subsystem - Media Gateway Function (IMS-MGW)

Note: In this document the term Media Gateway Function (MGW) is used when there is no need to differentiate between the CS domain entity and the IP Multimedia CN Subsystem entity. When refering specifically to the CS domain entity the term CS-MGW is used. When refering specifically to the IP Multimedia CN Subsystem entity, the term IMS-MGW is used.

Microsoft - Exhibit 1012
Microsoft v. Lemko- IPR2023-00531
Page 105 of 203

A IMS-MGW may terminate bearer channels from a switched circuit network and media streams from a packet network (e.g., RTP streams in an IP network). The IMS-MGW may support media conversion, bearer control and payload processing (e.g. codec, echo canceller, conference bridge), it:

- Interacts with the MGCF for resource control.
- Owns and handles resources such as echo cancellers etc.
- May need to have codecs.

The IMS-MGW will be provisioned with the necessary resources for supporting UMTS/GSM transport media. Further tailoring (i.e. packages) of the H.248 [52] may be required to support additional codecs and framing protocols, etc.

4a.7.4 Multimedia Resource Function Controller (MRFC)

The MRFC:

- Controls the media stream resources in the MRFP.
- Interprets information coming from an AS and S-CSCF (e.g session identifier) and control MRFP accordingly.
- Generates CDRs .

4a.7.4a Multimedia Resource Function Processor (MRFP)

The MRFP:

- Controls bearers on the Mb reference point.
- Provides resources to be controlled by the MRFC.
- Mixes incoming media streams (e.g. for multiple parties).
- Sources media streams (for multimedia announcements).
- Processes media streams (e.g. audio transcoding, media analysis).
- Floor Control (i.e. manage access rights to shared resources in a conferencing environment).

4a.7.5 Void

4a.7.6 Breakout Gateway Control Function (BGCF)

The Breakout Gateway control function (BGCF) selects the network in which PSTN breakout is to occur and - within the network where the breakout is to occur - selects the MGCF.

4a.7.7 Application Server (AS)

An Application Server (AS) i.e., SIP Application Server, OSA Application Server, or CAMEL IM-SSF, offers value added IM services and resides either in the user's home network or in a third party location. The third party could be a network or simply a stand-alone AS.

NOTE: The OSA Application Server does not directly interact with the IMS network entities but through the OSA Service Capability Servers (OSA SCS-s). Further information on OSA is provided in TS 22.127 [4].

The AS (SIP Application Server and/or the OSA Service Capability Server and/or IM-SSF) can communicate with the HSS. The Sh and Si interfaces are used for this purpose.

The Serving-CSCF to AS interface is used to provide services residing in an AS. Two cases were identified:

- Serving-CSCF to an AS in Home Network.

Microsoft - Exhibit 1012
Microsoft v. Lemko- IPR2023-00531
Page 106 of 203

- Serving-CSCF to an AS in a trusted External Network (e.g., Third Party or Visited). The S-CSCF does not provide authentication and security functionality for secure direct third party access to the IM Subsystem. The OSA framework provides a standardized way for third party access to the IM Subsystem.

The Interrogating-CSCF to AS interface is used to forward SIP requests destined to a Public Service Identity hosted by the AS directly to that AS.

An Application Server may influence and impact the SIP session on behalf of the services supported by the operator's network. An AS may host and execute services.

4a.7.8 Interconnection Border Control Function (IBCF)

An IBCF provides application specific functions at the SIP/SDP protocol layer in order to perform interconnection between two operator domains. It enables communication between IPv6 and IPv4 SIP applications. network topology hiding, controlling transport plane functions, screening of SIP signalling information, selecting the appropriate signalling interconnect and generation of charging data records. Details are described in TS 23.228 [34].

4a.7.9 Transition Gateway (TrGW)

A TrGW is located within the media path and controlled by an IBCF. It provides functions like network address/port translation and IPv4/IPv6 protocol translation. Details are described in TS 23.228 [34].

4a.8 Signalling Gateway Function (SGW)

The SGW performs the signalling conversion (both ways) at transport level between the SS7 based transport of signaling used in pre-Rel 4 networks, and the IP based transport of signalling possibly used in post-R99 networks (i.e. between Sigtran SCTP/IP and SS7 MTP). The SGW does not interpret the application layer (e.g. MAP, CAP, BICC, ISUP) messages but may have to interpret the underlying SCCP or SCTP layer to ensure proper routing of the signaling.

4a.9 Global Text Telephony Specific entities

Interworking between cellular text modem (CTM) and text telephony standards (e.g. V.18) used in external networks can beis supported by three methods:

- Routing calls through a CTM Special resource function (CTM-SRF) in the core network. The CTM-SRF is linked in to the call path via CAMEL procedures. Depending on operator configuration the CTM-SRF may also be linked in to the call path for Emergency calls.
- A CTM / Text telephone converting function included along the speech call path selected by the network after an indication from the terminal that CTM is required.
- A CTM / Text telephone converting function included in all speech call paths.

Further information of the support for text telephony is found in TS 23.226 [37].

For further details of CTM, see TS 26.226 [38].

4a.10 Security Gateway (SEG)

The UMTS network domain shall be logically and physically divided into security domains in order to protect IP based control plane signalling. These security domains typically coincide with operator borders.

The interface between different security domains is protected by Security Gateways (SEGs). The SEGs are responsible for enforcing the security policy of a IP security domain towards other SEGs in the destination IP security domain. All NDS/IP traffic shall pass through a SEG before entering or leaving a security domain. For further details of SEG, see TS 33.210 [64].

Microsoft - Exhibit 1012
Microsoft v. Lemko- IPR2023-00531
Page 107 of 203

4a.11 Application Function (AF)

The Application Function (AF) is an element offering applications that require the control of IP bearer resources or the control of flow based bearer charging. The AF is capable of communicating with the PDF to transfer dynamic QoS-related service information and/or with the CRF to transfer dynamic charging-related service information.

One example of an AF is the P-CSCF of the IM CN subsystem.

4a.12 Policy Decision Function (PDF)

The Policy Decision Function (PDF) acts as a policy decision point for service based local policy control of IP bearer resources. The PDF makes decisions about IP berarer resource allocation requests.

4a.13 3GPP/WLAN Interworking entities

4a.13.1 WLAN UE

A WLAN UE is the User Equipment using a UICC card utilized by a 3GPP subscriber to access the WLAN network for 3GPP interworking purpose.

4a.13.2 3GPP AAA Proxy

The 3GPP AAA Proxy represents a AAA proxying and filtering function and resides in the visited 3GPP network. It is is envolved in access and service authentication and authorization procedures of a WLAN UE.

4a.13.3 3GPP AAA Server

The 3GPP AAA server resides in the 3GPP network and is responsible for access and service authentication and authorization of a WLAN UE.

4a.13.4 WLAN Access Gateway (WAG)

The WLAN access gateway is a gateway between WLAN and 3GPP network. In the roaming case it resides in the visited 3GPP network, otherwise in the home 3GPP network. It provides filtering, policing and charging functionality for the traffic between WLAN UE and 3GPP network.

4a.13.5 Packet Data Gateway (PDG)

The Packet Data Gateway provides access to PS based services for a WLAN UE. It resides either in the home (for access to home services) or in the visited 3GPP network (for access to local services).

4a.14 Multimedia Broadcast Multicast Service (MBMS) specific entities

4a.14.1 General

The Multimedia Broadcast Multicast Service (MBMS) is a point-to-multipoint service in which data is transmitted from a single source entity to multiple recipients. TS 23.246 [70] contains the technical realization of the service.

4a.14.2 Broadcast-Multicast Service Centre (BM-SC)

The Broadcast-Multicast Service Centre provides functions for MBMS user service provisioning and delivery. It may serve as an entry point for content provider MBMS transmissions, used to authorise and initiate MBMS Bearer Services within the PLMN and can be used to schedule and deliver MBMS transmissions.

Microsoft - Exhibit 1012
Microsoft v. Lemko- IPR2023-00531
Page 108 of 203

4a.15 Charging Rules Function (CRF)

The Charging Rules Function (CRF) acts as a controller for Flow Based Charging functionality. The CRF selects and provides the applicable charging rules to the GGSN.

4a.16 GUP Server

The GUP Server is a functional entity providing a single point of access to the Generic User Profile data of a particular subscriber. The architecture does not specify or limit the physical location of the GUP Server enabling flexibility in the implementations. For further details of the GUP Server, see TS 23.240 [71].

5 Configuration of a Public Land Mobile Network

5.1 Basic configuration

The basic configuration of a Public Land Mobile Network (PLMN) supporting GPRS and the interconnection to the PSTN/ISDN and PDN is presented in figure 1 and figure 1a. This configuration presents signalling and user traffic interfaces which can be found in a PLMN. Implementations may be different: some particular functions may be gathered in the same equipment and then some interfaces may become internal interfaces.

In the basic configuration presented in figure 1, all the functions are considered implemented in different equipments. Therefore, all the interfaces within PLMN are external. Interfaces A and Abis are defined in the 48-series ofTechnical Specifications. Interfaces Iu, Iur and Iub are defined in the 25.4xx-series of Technical Specifications. Interfaces B, C, D, E, F and G need the support of the Mobile Application Part of the signalling system No. 7 to exchange the data necessary to provide the mobile service. No protocols for the H-interface and for the I-interface are standardized. All the GPRS-specific interfaces (G- series) are defined in the 23-series and 24-series of Technical Specifications. Interfaces Mc, Nb, and Nc are defined in TS 23.205 [43] and in the 29-series of Technical Specifications.

From this configuration, all the possible PLMN organisations can be deduced. In the case when some functions are contained in the same equipment, the relevant interfaces become internal to that equipment.

Microsoft - Exhibit 1012
Microsoft v. Lemko- IPR2023-00531
Page 109 of 203

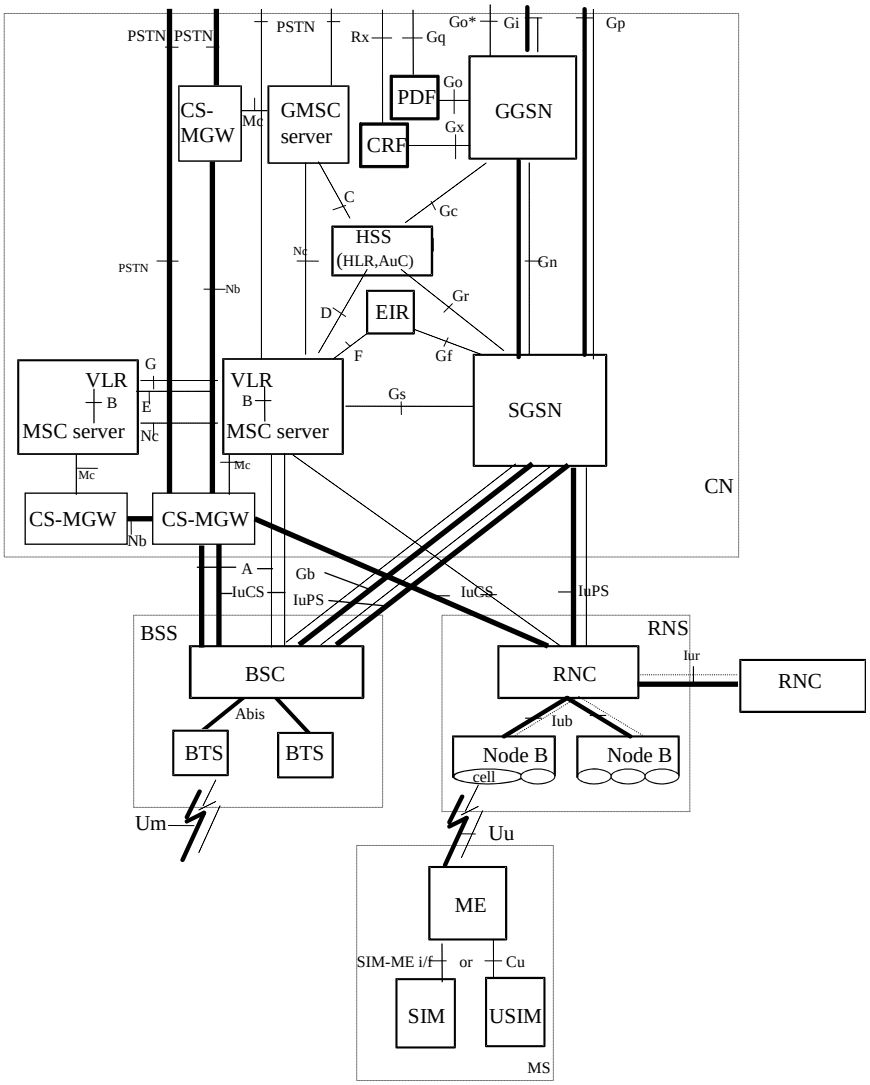

Legend:
Bold lines: interfaces supporting user traffic;
Dashed lines: interfaces supporting signalling.
NOTE 1: The figure shows direct interconnections between the entities. The actual links may be provided by an underlying network (e.g. SS7 or IP): this needs further studies.
NOTE 2: When the MSC and the SGSN are integrated in a single physical entity, this entity is called UMTS MSC (UMSC).
NOTE 3: A (G)MSC server and associated CS-MGW can be implemented as a single node: the (G)MSC.
NOTE 4: The Gn interface (between two SGSNs) is also part of the reference architecture, but is not shown for layout purposes only.
NOTE 5: The Go interface marked with a '*' has been included to this figure for backwards compatibility only, in order to support connecting to Release-5 IM CN Subsystem configurations

Figure 1: Basic Configuration of a PLMN supporting CS and PS services and interfaces

Microsoft - Exhibit 1012
Microsoft v. Lemko- IPR2023-00531
Page 110 of 203

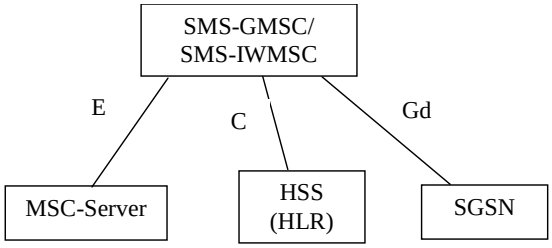

Figure 1a: Configuration for Short Message Service

5.2 Configuration of LCS entities

5.2.1 Configuration of LCS entities for GERAN

The configuration of LCS entities for GERAN is presented in figure 2. In the figure, all the functions are considered implemented in different logical nodes. If two logical nodes are implemented in the same physical equipment, the relevant interfaces may become internal to that equipment.

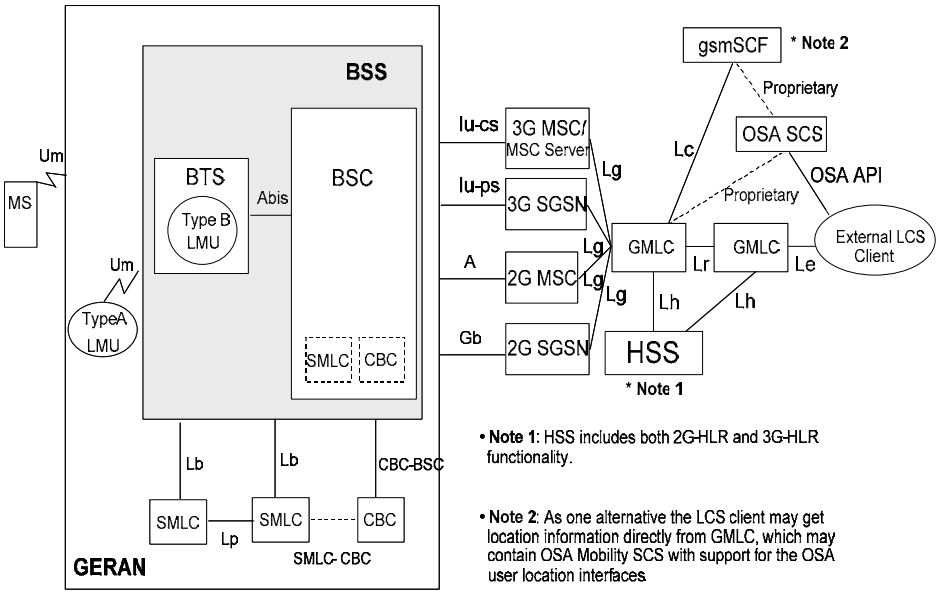

Figure 2: Configuration of LCS entities for a GERAN PLMN

Microsoft - Exhibit 1012
Microsoft v. Lemko- IPR2023-00531
Page 111 of 203

5.2.2 Configuration of LCS entities for UTRAN

The basic configuration of UTRAN LCS is presented in figure 3. The SMLC funtionality is integrated in SRNC or, in case a Stand-Alone SMLC entity (SAS) is present, split between SRNC and SMLC.

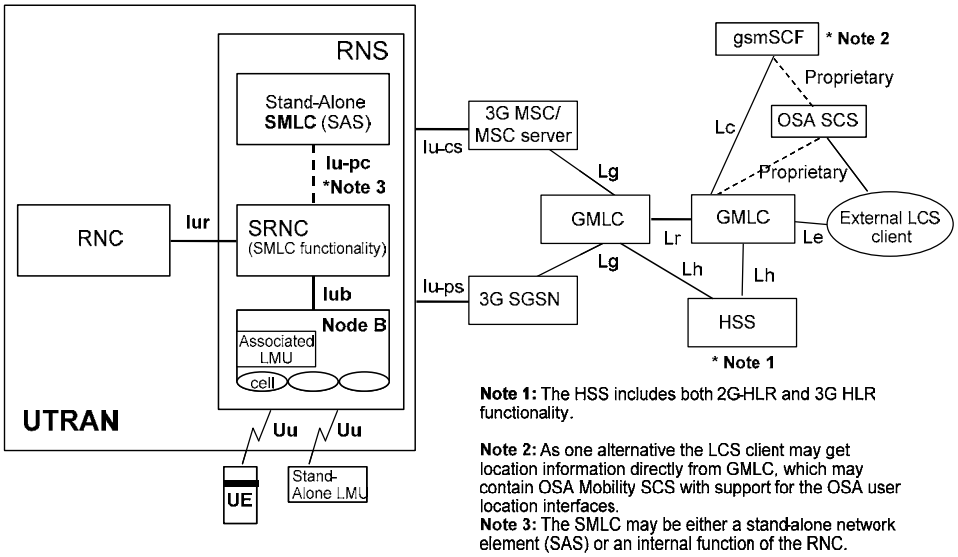

Figure 3: Configuration of LCS entities for a UTRAN PLMN

5.3 Configuration of CAMEL entities

The following figure shows the interconnection of the CAMEL-specific entities with the rest of the network. Only the interfaces specificly involved in CAMEL provisionning are shown, i.e. all the GMSC, MSC, SGSN and HLR interfaces depicted in figure 1 are still supported by these entities even if not shown.

NOTE: Most CAMEL-specific interfaces have no particular name. They are designated by the name of the two entities they link together, e.g. "the gsmSSF-gsmSCF interface".

Microsoft - Exhibit 1012
Microsoft v. Lemko- IPR2023-00531
Page 112 of 203

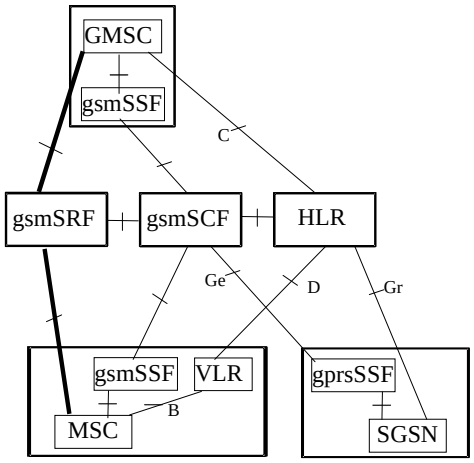

Figure 4: configuration of CAMEL entities

The bold lines are used for interfaces supporting user data only, the dashed lines are used for interfaces supporting signalling only.

5.4 Configuration of CBS entities

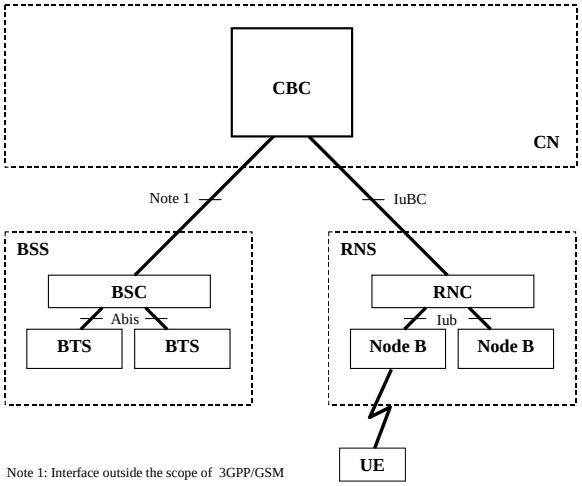

Figure 5: Configuration of a PLMN supporting Cell Broadcast Service entities

5.5 Configuration of IM CN Subsystem entities

The configuration of IM CN Subsystem entities is presented in figure 6. In the figure, all the functions are considered implemented in different logical nodes. If two logical nodes are implemented in the same physical equipment, the relevant interfaces may become internal to that equipment.

Microsoft - Exhibit 1012
Microsoft v. Lemko- IPR2023-00531
Page 113 of 203

Only the interfaces specifically linked to the IM subsystem are shown, i.e. all the SGSN, GGSN and HSS interfaces depicted in figure 1 are still supported by these entities even if not shown.

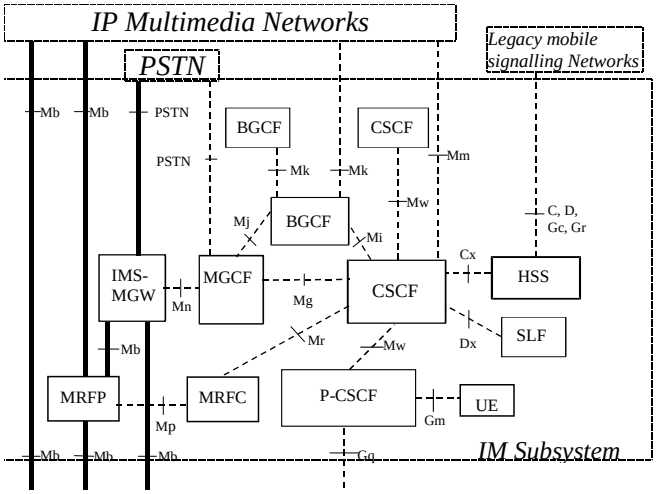

Legend:
Bold lines: interfaces supporting user traffic;
Dashed lines: interfaces supporting only signalling.

Figure 6: Configuration of IM Subsystem entities

The figure below depicts an overall view of the functional architecture for services.

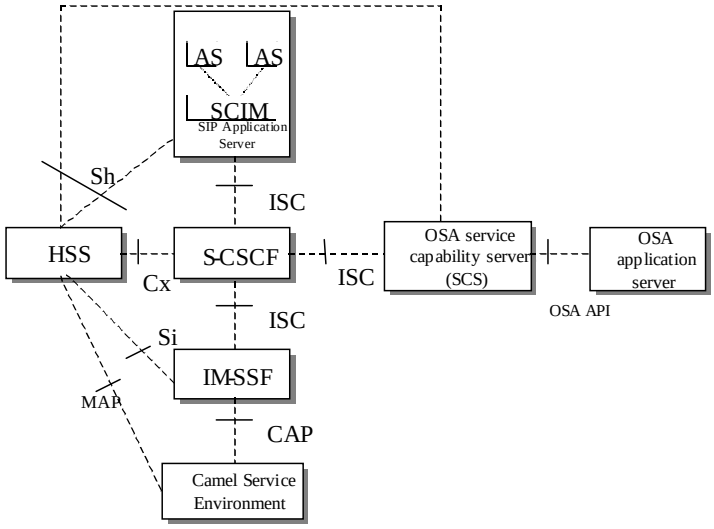

Figure 6a: Functional architecture for the provision of service in the IMS

The purpose of the IM SSF is to host the CAMEL network features (i.e. trigger detection points, CAMEL Service Switching Finite State Machine, etc) and to interwork with CAP.

Microsoft - Exhibit 1012
Microsoft v. Lemko- IPR2023-00531
Page 114 of 203

The IM SSF and the CAP interface support legacy services only.

The application server may contain "service capability interaction manager" (SCIM) functionality and other application servers. The SCIM functionality is an application which performs the role of interaction management. The internal components are represented by the "dotted boxes" inside the SIP application server. The internal structure of the application server is outside the standards. The Sh interface shall have sufficient functionality to enable this scenario.

The figure below depicts an overall view of the functional architecture for enabling the management of the user's service related information via the Ut interface.

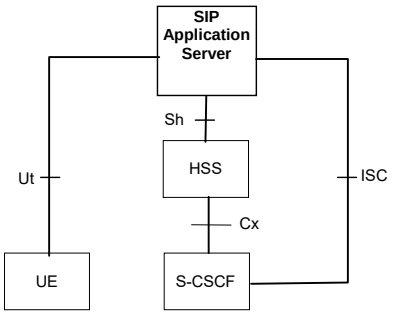

Figure 6b: Functional architecture for the management of the user's service related information

The figure below depicts an overall view of the functional architecture for routing SIP requests between I-CSCF and Application Server.

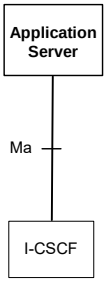

Figure 6c: Functional architecture for the routing of SIP requests between I-CSCF and AS

5.6 Configuration of Signalling Gateway Function

The Signalling gateway function is used to interconnect different signalling networks i.e. SCTP/IP based signalling networks and SS7 signalling networks. The application layer (e.g. ISUP, BICC, MAP or CAP) is not affected. The signalling gateway function may be implemented as a stand alone entity or inside another entity.

Microsoft - Exhibit 1012
Microsoft v. Lemko- IPR2023-00531
Page 115 of 203

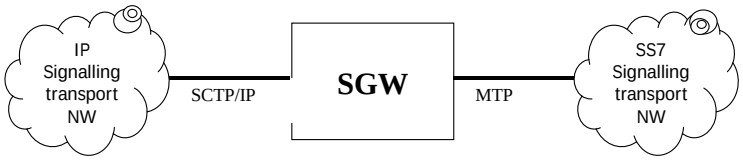

Figure 7: Configuration of a signalling gateway function

NOTE: SS7 application transport and SCTP/IP adaption protocols are not shown.

5.7 Configuration of 3GPP/WLAN Interworking

The configuration of the 3GPP/WLAN interworking function is presented in figure 8. The figure shows all network entities and reference point for the roaming scenario when a WLAN UE accesses PS based services in the home network. PS based services in the visited network are accessed via a Packet Data Gateway in the visited 3GPP network. Reference point Ww between WLAN UE and WLAN is outside the scope of 3GPP and only shown for completeness.

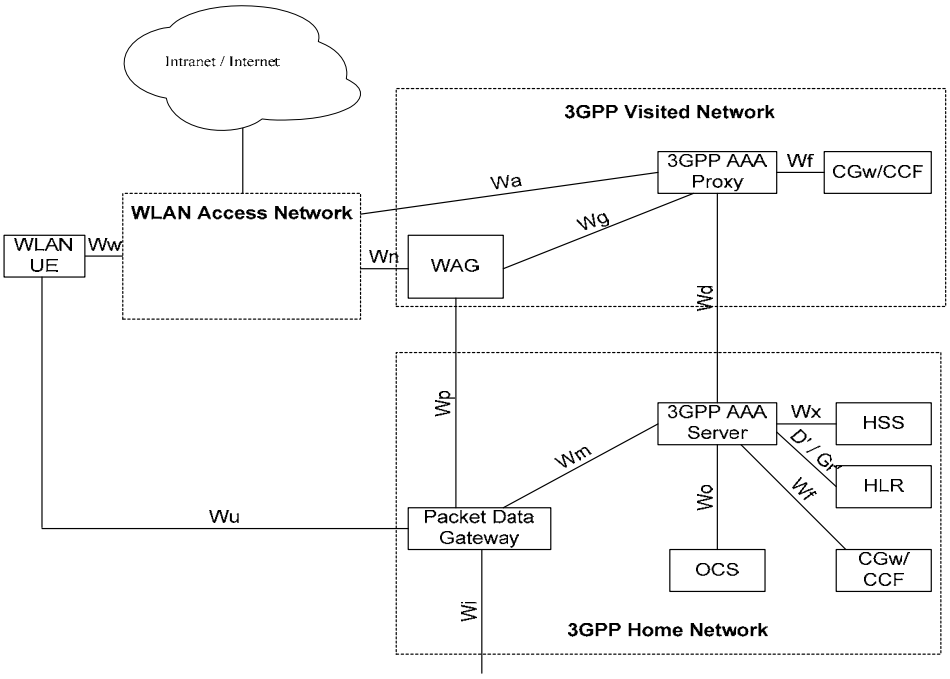

Figure 8: Configuration of a 3GPP/WLAN interworking function

5.8 Configuration of Presence service

The reference architecture model, the reference points and the functional entities to support the Presence Service are described in TS 23.141 [68].

Microsoft - Exhibit 1012
Microsoft v. Lemko- IPR2023-00531
Page 116 of 203

5.9 Configuration of MBMS entities

The configuration of the MBMS entities are represented in figure 9.

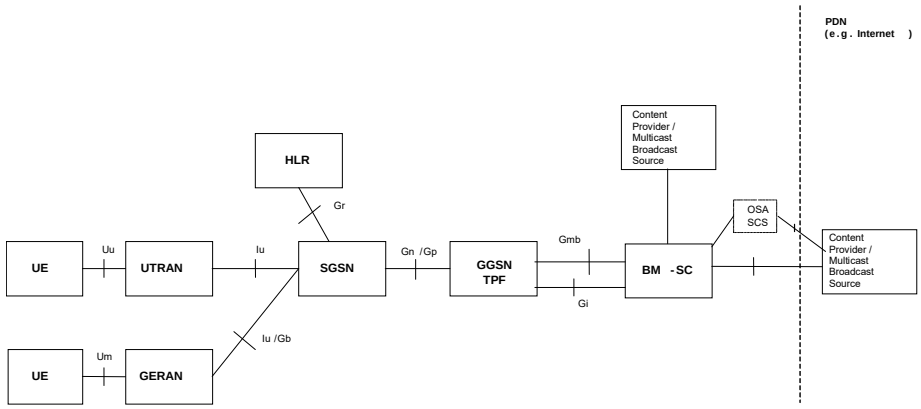

Figure 9: Configuration of MBMS entities

6 PLMN basic interfaces and reference points

The implementation of the mobile service with international roaming implies the exchange of data between the equipment involved in the service. The same No.7 signalling network should be used to transfer these data and the call-related signalling information.

Editor's note: either the difference between interface and reference point should be cleary provided, or only one of the terms should be used.

6.1 Interfaces between Mobile Station and the Fixed Infrastructure

6.1.1 Interface between Mobile Station and Base Station System (Um-interface)

The interface between the MS and the BSS is specified in the 44- and 45-series of Technical Specifications.

6.1.2 Interface between User Equipment and Radio Netwok System (Uu-interface)

The interface between the UE and the RNS is specified in the 24- and 25-series of Technical Specifications.

Microsoft - Exhibit 1012
Microsoft v. Lemko- IPR2023-00531
Page 117 of 203

6.2 Interface between the Core Network and the Access Network

6.2.1 Interfaces between the CS domain and the Access Network

6.2.1.1 Interface between the MSC and Base Station System (A-interface)

The interface between the MSC and its BSS is specified in the 48-series of Technical Specifications.

The BSS-MSC interface is used to carry information concerning:

- BSS management;
- call handling;
- mobility management.

6.2.1.2 Interface between the MSC and Base Station System (Iu_CS interface)

The interface between the MSC and its BSS is specified in the 25.41x-series of Technical Specifications.

The BSS-MSC interface is used to carry information concerning:

- BSS management;
- call handling;
- mobility management;

6.2.1.3 Interface between the MSC and RNS (Iu_CS interface)

The interface between the MSC and its RNS is specified in the 25.41x-series of Technical Specifications.

The RNS-MSC interface is used to carry information concerning:

- RNS management;
- call handling;
- mobility management.

6.2.2 Interfaces between the PS domain and the Access Network

6.2.2.1 Interface between SGSN and BSS (Gb-interface)

The BSS-SGSN interface is used to carry information concerning:

- packet data transmission;
- mobility management.

The Gb interface is defined in TS 48.014 [44], TS 48.016 [45] and TS 48.018 [46].

6.2.2.2 Interface between SGSN and BSS (Iu_PS-interface)

The BSS-SGSN interface is used to carry information concerning:

- packet data transmission;
- mobility management.

The Iu_PS interface is defined in the 25.41x-series of 3GPP Technical Specifications.

Microsoft - Exhibit 1012
Microsoft v. Lemko- IPR2023-00531
Page 118 of 203

6.2.2.3 Interface between SGSN and RNS (Iu_PS-interface)

The RNS-SGSN interface is used to carry information concerning:

- packet data transmission;
- mobility management.

The Iu_PS interface is defined in the 25.41x-series of Technical Specifications.

6.3 Interfaces internal to the Access Network

6.3.1 Interface between BSC and BTS (Abis-interface)

When the BSS consists of a Base Station Controller (BSC) and one or more Base Transceiver Stations (BTS), this interface is used between the BSC and BTS to support the services offered to the GSM users and subscribers.

The interface also allows control of the radio equipment and radio frequency allocation in the BTS.

The interface is specified in the 48.5x-series of Technical Specifications.

6.3.2 Interface between RNC and Node B (Iub-interface)

When the RNS consists of a Radio Network Controller (RNC) and one or more Node B, this interface is used between the RNC and Node B to support the services offered to the UMTS users and subscribers.

The interface also allows control of the radio equipment and radio frequency allocation in the Node B.

The interface is specified in the 28.5x-series of Technical Specifications.

6.3.3 Interface between two RNCs (Iur-interface)

This interface is defined in the 25.42x series of Technical Specifications.

6.4 Interfaces internal to the Core Network

6.4.1 Interfaces internal to the CS domain

6.4.1.1 Interface between the MSC server and its associated VLR (B-interface)

The VLR is the location and management database for the mobile subscribers roaming in the area controlled by the associated MSC server(s). Whenever the MSC server needs data related to a given mobile station currently located in its area, it interrogates the VLR. When a mobile station initiates a location updating procedure with an MSC server, the MSC server informs its VLR which stores the relevant information. This procedure occurs whenever an MS roams to another location area. Also, when a subscriber activates a specific supplementary service or modifies some data attached to a service, the MSC server informs (via the VLR) the HLR which stores these modifications and updates the VLR if required.

This interface is internal to the MSC server /VLR; signalling on it is not standardised.

6.4.1.2 Interface between the HLR and the MSC server (C-interface)

The Gateway MSC server must interrogate the HLR of the required subscriber to obtain routing information for a call or a short message directed to that subscriber.

Signalling on this interface uses the Mobile Application Part (MAP), which in turn uses the services of Transaction Capabilities (see TS 29.002 [26]).

Microsoft - Exhibit 1012
Microsoft v. Lemko- IPR2023-00531
Page 119 of 203

For CAMEL purposes, this interface is used as described in TS 23.078 [10c]. It is used e.g. at terminating calls to exchange routeing information, subscriber status, location information, subscription information, etc.

6.4.1.3 Interface between the HLR and the VLR (D-interface)

This interface is used to exchange the data related to the location of the mobile station and to the management of the subscriber. The main service provided to the mobile subscriber is the capability to set up or to receive calls within the whole service area. To support this, the location registers have to exchange data. The VLR informs the HLR of the location of a mobile station managed by the latter and provides it (either at location updating or at call set-up) with the roaming number of that station. The HLR sends to the VLR all the data needed to support the service to the mobile subscriber. The HLR then instructs the previous VLR to cancel the location registration of this subscriber. Exchanges of data may occur when the mobile subscriber requires a particular service, when he wants to change some data attached to his subscription or when some parameters of the subscription are modified by administrative means.

Signalling on this interface uses the Mobile Application Part (MAP), which in turn uses the services of Transaction Capabilities (see TS 29.002 [26]).

For CAMEL purposes, this interface is used to send the CAMEL related subscriber data to the visited PLMN and for provision of MSRN. The interface is also used for the other purposes described in TS 23.078 [10c], e.g. to retrieve subscriber status and location information of the mobile subscriber or to indicate suppression of announcement for a CAMEL service.

6.4.1.4 Interface between MSC servers (E-interface)

When a mobile station moves from one MSC area to another during a call, a handover procedure has to be performed in order to continue the communication. For that purpose the MSC servers have to exchange data to initiate and then to realise the operation.

After the handover operation has been completed, the MSC servers will exchange information to transfer A- or Iu- interface signalling as defined in TS 23.009 [6].

When a short message is to be transferred between a Mobile Station and Short Message Service Centre (SC), in either direction, this interface is used to transfer the message between the MSC server serving the Mobile Station and the MSC server which acts as the interface to the SC.

Signalling on this interface uses the Mobile Application Part (MAP), which in turn uses the services of Transaction Capabilities (see TS 29.002 [26]).

6.4.1.5 Interface between MSC server and EIR (F-interface)

This interface is used between MSC server and EIR to exchange data, in order that the EIR can verify the status of the IMEI retrieved from the Mobile Station.

Signalling on this interface uses the Mobile Application Part (MAP), which in turn uses the services of Transaction Capabilities (see TS 29.002 [26]).

6.4.1.6 Interface between VLRs (G-interface)

When a mobile subscriber moves from a VLR area to another Location Registration procedure will happen. This procedure may include the retrieval of the IMSI and authentication parameters from the old VLR.

Signalling on this interface uses the Mobile Application Part (MAP), which in turn uses the services of Transaction Capabilities (see TS 29.002 [26]).

6.4.1.7 Reference point (G)MSC server – CS-MGW (Mc Reference Point)

The Mc reference point describes the interfaces between the MSC Server and CS-MGW, and between the GMSC Server and CS-MGW. It has the following properties:

- full compliance with the H.248 [52] standard, baseline work of which is currently carried out in ITU-T Study Group 16, in conjunction with IETF MEGACO WG.

Microsoft - Exhibit 1012
Microsoft v. Lemko- IPR2023-00531
Page 120 of 203

- flexible connection handling which allows support of different call models and different media processing purposes not restricted to H.323 [54] usage.
- open architecture where extensions/Packages definition work on the interface may be carried out.
- dynamic sharing of MGW physical node resources. A physical MGW can be partitioned into logically separate virtual MGWs/domains consisting of a set of statically allocated Terminations.
- dynamic sharing of transmission resources between the domains as the MGW controls bearers and manage resources according to the H.248 [52] protocols.

The functionality across the Mc reference point will need to support mobile specific functions such as SRNS relocation/handover and anchoring. It is expected that current H.248/IETF Megaco [52] standard mechanisms can be applied to enable this.

6.4.1.8 Reference Point MSC Server – GMSC Server (Nc Reference Point)

Over the Nc reference point, the Network-Network based call control is performed. Examples of this are ISUP or an evolvement of ISUP for bearer independent call control (BICC). Different options for signalling transport on Nc shall be possible including IP.

6.4.1.9 Reference Point CS-MGW – CS-MGW (Nb Reference Point)

Over the Nb reference point the bearer control and transport are performed. The transport may be RTP/UDP/IP [59], [60] or AAL2 (I.363-2) [57] for transport of user data. Different options for user data transport and bearer control shall be possible on Nb, for example: AAL2/Q.AAL2, STM/none, RTP/H.245 [58], IPBC.

6.4.2 Interfaces internal to the PS domain

6.4.2.1 Interface between SGSN and HLR (Gr-interface)

This interface is used to exchange the data related to the location of the mobile station and to the management of the subscriber. The main service provided to the mobile subscriber is the capability to transfer packet data within the whole service area. The SGSN informs the HLR of the location of a mobile station managed by the latter. The HLR sends to the SGSN all the data needed to support the service to the mobile subscriber. Exchanges of data may occur when the mobile subscriber requires a particular service, when he wants to change some data attached to his subscription or when some parameters of the subscription are modified by administrative means.

Signalling on this interface uses the Mobile Application Part (MAP), which in turn uses the services of Transaction Capabilities (TCAP) (see TS 29.002 [26]).

6.4.2.2 Interface between SGSN and GGSN (Gn- and Gp-interface)

These interfaces are used to support mobility between the SGSN and GGSN. The Gn interface is used when GGSN and SGSN are located inside one PLMN. The Gp-interface is used if GGSN and SGSN are located in different PLMNs. The Gn/Gp interface also includes a part which allows SGSNs to communicate subscriber and user data, when changing SGSN.

Signalling on this interface uses the User Datagram Protocol, UDP/IP [59]. The Gn/Gp interface is defined in TS 29.060 [51].

6.4.2.3 Signalling Path between GGSN and HLR (Gc-interface)

This optional signalling path may be used by the GGSN to retrieve information about the location and supported services for the mobile subscriber, to be able to activate a packet data network address.

There are two alternative ways to implement this signalling path:

- if an SS7 interface is implemented in the GGSN, signalling between the GGSN and the HLR uses the Mobile Application Part (MAP), which in turn uses the services of Transaction Capabilities (TCAP) (see TS 29.002 [26]);

Microsoft - Exhibit 1012
Microsoft v. Lemko- IPR2023-00531
Page 121 of 203

- if there is *no* SS7 interface in the GGSN, any GSN in the same PLMN and which has an SS7 interface installed can be used as a GTP to MAP protocol converter, thus forming a signalling path between the GGSN and the HLR.

6.4.2.4 Interface between SGSN and EIR (Gf-interface)

This interface is used between SGSN and EIR to exchange data, in order that the EIR can verify the status of the IMEI retrieved from the Mobile Station.

Signalling on this interface uses the Mobile Application Part (MAP), which in turn uses the services of Transaction Capabilities (TCAP) (see TS 29.002 [26]).

6.4.3 Interfaces used by CS and PS domains

6.4.3.1 Interface between MSC/VLR and SGSN (Gs-interface)

The SGSN may send location information to the MSC/VLR via the optional Gs interface. The SGSN may receive paging requests from the MSC/VLR via the Gs interface. The MSC/VLR may indicate to an SGSN, via the Gs interface, that an MS is engaged in a service handled by the MSC.

Signalling on this interface uses connectionless SCCP (without TCAP). SCCP Global Title (GT) is used for addressing. The Gs-interface is defined in TS 29.016 [48] and TS 29.018 [49].

6.4.3.2 Interface between HLR and AuC (H-Interface)

When an HLR receives a request for authentication and ciphering data for a Mobile Subscriber and it does not hold the requested data, the HLR requests the data from the AuC. The protocol used to transfer the data over this interface is not standardised.

6.4.3.3 Interface between SGSN and SMS-GMSC/SMS-IWMSC (Gd-Interface)

This interface is used to transfer short messages between SGSN and SMS-GMSC or SMS-IWMSC over GPRS. Signalling on this interface uses the Mobile Application Part (MAP) (see TS 29.002 [26]).

6a PLMN specific interfaces

6a.1 GCR-specific interface

6a.1.1 Interface between the MSC and its associated GCR (I-interface)

The GCR is the management data base for the voice group or broadcast calls in the area controlled by the associated MSC(s). Whenever the MSC needs data related to a requested voice group or broadcast call it interrogates the GCR to obtain the respective voice group or broadcast call attributes. The protocol used to transfer the data over this interface is not standardized.

6a.2 (void)

6a.3 LCS-specific interfaces

6a.3.1 LCS interfaces using MAP

The following interfaces are based on MAP in LCS.

Microsoft - Exhibit 1012
Microsoft v. Lemko- IPR2023-00531
Page 122 of 203

- **Lh interface:** interface between GMLC and HLR. This interface is used by the GMLC to request the address of the visited MSC or SGSN for a particular target UE whose location has been requested (see TS 29.002 [26]).
- **Lg interface:** interface between GMLC - MSC and GMLC - SGSN. This interface is used by the GMLC to convey a location request to the MSC or SGSN currently serving a particular target UE whose location was requested. The interface is used by the MSC or SGSN to return location results to the GMLC (see TS 29.002 [26]).
- **Lc interface:** between GMLC and gsmSCF, CAMEL. This interface is used to get location information for CAMEL based services. (see TS 29.002 [26]).

6a.3.2 (void)

6a.3.3 (void)

6a.3.4 (void)

6a.3.5 Interface between BSC and SMLC (Lb-interface)

In GERAN, a SMLC supports positioning via signaling on the Lb interface to the BSC serving the target MS.

Signalling on this interface uses BSSAP-LE, which is specified in TS 49.031 [50]

In UTRAN, the Lb interface is not standardized, the SMLC functionality is included in SRNC.

6a.3.6 Interface between Peer SMLCs (Lp-interface)

In GERAN, a SMLC may support the Lp interface to enable access to information and resources owned by another SMLC.

Signalling on this interface uses BSSAPP-LE, which is defined in TS 49.031 [50], and SMLCPP, which is specified in TS 48.031 [47].

In UTRAN, the SMLC functionality is included in SRNC and the Iur interface shall include the Lp interface type of functionality.

6a.3.7 Interface between BTS and LMU (Um-interface)

The Um/Uu interface specific to LCS is defined in TS 44.071 [55].

6a.3.8 Interface between GMLC and External LCS Client (Le-interface)

The Le interface is used by the external LCS client to retrieve location information from the LCS server. Signalling on this interface may use the OMA Mobile Location Protocol (MLP) [62] and Open Service Access Application Programming Interface (OSA-API) [63].

6a.3.9 Interface between RNS and Stand-Alone LMU, UE (Uu-interface)

The Uu interface is used to communicate among the UE Positioning entities associated with the SRNC, the UEs and the stand-alone LMU. The Uu interface may pass measurement requests and results to and from the UE or the stand-alone LMU. UE Positioning operations at the Uu interface are generally defined in the 24- and 25-series of 3GPP Technical Specifications. Furthermore, 25.305 describes how a stand-alone LMU may be distinguished from a normal UE.

Microsoft - Exhibit 1012
Microsoft v. Lemko- IPR2023-00531
Page 123 of 203

6a.3.10 Interface between SRNC and SAS (Stand-Alone SMLC) (Iupc-interface)

The Iupc interface defined for LCS is specified in TS 25.453 [66].

6a.3.11 Interface between GMLC and GMLC (Lr-interface)

The Lr interface is used by the GMLC to communicate with other GMLCs. Signalling on this interface may use the OMA Roaming Location Protocol (RLP) [69].

6a.4 CAMEL-specific interfaces

The CAMEL-specific interfaces are detailed in TS 23.078 [10c]. These interfaces are.

6a.4.1 GMSC - gsmSSF interface

This is an internal interface. The interface is described in the specification to make it easier to understand the handling of Detection Points (arming/disarming of DPs, DP processing etc.).

6a.4.2 gsmSSF - gsmSCF interface

This interface is used by the gsmSCF to control a call in a certain gsmSSF and to request the gsmSSF to establish a connection with a gsmSRF. Relationships on this interface are opened as a result of the gsmSSF sending a request for instructions to the gsmSCF.

6a.4.3 MSC - gsmSSF interface

This is an internal interface. The interface is described in the specification to make it easier to understand the handling of DPs (arming/disarming of DPs, DP processing etc.).

6a.4.4 gsmSCF - HLR interface

This interface is used by the gsmSCF to request information from the HLR. As a network operator option the HLR may refuse to provide the information requested by the gsmSCF.

This interface is also used for USSD operations, both for gsmSCF-initiated dialogues and MS-initiated dialogues (relayed via HLR). It is a network operator option whether to support or not USSD operations on this interface.

6a.4.5 gsmSCF - gsmSRF interface

This interface is used by the gsmSCF to instruct the gsmSRF to play tones/announcements to the users.

6a.4.6 MSC - gsmSCF interface

This interface is used by the MSC to send supplementary service invocation notifications to the gsmSCF.

6a.4.7 SGSN - gprsSSF interface

This is an internal interface. The interface is described in the specification to make it easier to understand the handling of DPs (arming/disarming of DPs, DP processing etc.).

6a.4.8 gprsSSF - gsmSCF interface (Ge Reference Point)

This interface is used by the gsmSCF to control a GPRS session or individual PDP Context in a certain gprsSSF. Relationships between the gprsSSF and the gsmSCF (GPRS dialogues) on this interface are opened as a result of the gprsSSF sending a request for instructions to the gsmSCF. This interface is also known as Ge reference point [9a].

Microsoft - Exhibit 1012
Microsoft v. Lemko- IPR2023-00531
Page 124 of 203

6a.5 CBS-specific interfaces

6a.5.1 Interface between the CBC and RNS (Iu_BC Interface)

The interface between the CBC and the RNS is specified in the 25.41x-series of Technical Specifications.

The CBC-RNS interface is used to carry information concerning:

- the CBS messages itself; and
- CBS delivery parameter.

6a.6 Number portability specific interfaces

6a.6.1 IN-based solution

6a.6.1.1 NPDB to MSC interface

Upon receiving an ISUP IAM, the (gateway or visited) MSC send a database query to the NPDB as a result of analysis of the received MSISDN. The MSISDN is included in the query to the NPDB. The NPDB determines whether the MSISDN is ported or not. If not, it responds back to the MSC to continue the normal call setup procedure for MT calls (optionally providing the Routing Number). If it is ported, the NPDB responds back to the MSC with a Routing Number pointing out the Subscription network.

6a.6.2 Signalling Relay-based solution

6a.6.2.1 GMSC to MNP-SRF interface

Upon receiving an ISUP IAM, the gateway MSC sends a routing interrogation to the MNP-SRF, which in turn will perform one of the actions, described in subclause 4a.7, depending on the portability status of the subscriber and the network configuration (see TS 23.066 [40]).

6a.6.2.2 MNP-SRF to HLR interface

When the MNP-SRF receives a routing interrogation from the GMSC or an interrogating network entity (non/call related signalling), and it determines that the subscriber is not ported or it has been ported from another network, the MNP-SRF relays the message to the HLR.

6a.7 IM Subsystem Reference Points

6a.7.1 Reference Point HSS – CSCF (Cx Reference Point)

The Cx reference point supports information transfer between CSCF and HSS.

The main procedures that require information transfer between CSCF and HSS are

1) Procedures related to Serving CSCF assignment
2) Procedures related to routing information retrieval from HSS to CSCF
3) Procedures related to authorisation (e.g., checking of roaming agreement)
4) Procedures related to authentication: transfer of security parameters of the subscriber between HSS and CSCF
5) Procedures related to filter control: transfer of filter parameters of the subscriber from HSS to CSCF

Further information on the Cx reference point is provided in TS 23.228 [34].

Microsoft - Exhibit 1012
Microsoft v. Lemko- IPR2023-00531
Page 125 of 203

6a.7.2 Reference Point CSCF – UE (Gm Reference Point)

The Gm reference point supports the communication between UE and IM CN subsystem, e.g. related to registration and session control.

The protocol used for the Gm reference point is SIP (as defined by RFC 3261 [61], other relevant RFC's, and additional enhancements introduced to support 3GPP´s needs).

6a.7.3 Reference Point MGCF – IMS-MGW (Mn Reference Point)

The Mn reference point describes the interfaces between the MGCF and IMS-MGW in the IMS. It has the following properties:

- full compliance with the H.248 standard functions for IMS – PSTN/PLMN interworking.- flexible connection handling which allows support of different call models and different media processing purposes not restricted to H.323 [54] usage.
- open architecture where extensions/Packages definition work on the interface may be carried out.
- dynamic sharing of IMS-MGW physical node resources. A physical IMS-MGW can be partitioned into logically separate virtual MGWs/domains consisting of a set of statically allocated Terminations.
- dynamic sharing of transmission resources between the domains as the IMS- MGW controls bearers and manage resources according to the H.248 [52] protocols and functions for IMS.

6a.7.4 Reference Point MGCF – CSCF (Mg Reference Point)

The Mg reference point allows the MGCF to forward incoming session signalling (from the PSTN) to the CSCF for the purpose of interworking with PSTN networks.

The protocol used for the Mg reference point is SIP (as defined by RFC 3261 [61], other relevant RFC's, and additional enhancements introduced to support 3GPP´s needs).

6a.7.5 (void)

6a.7.6 Reference Point CSCF - MRFC (Mr Reference Point)

The Mr reference point allows interaction between an S-CSCF and an MRFC.

The protocol used for the Mr reference point is SIP (as defined by RFC 3261 [61], other relevant RFC's, and additional enhancements introduced to support 3GPP´s needs).

6a.7.6a Reference Point MRFC – MRFP (Mp Reference Point)

The Mp reference point allows an MRFC to control media stream resources provided by an MRF.

The Mp reference point has the following properties:

- Full compliance with the H.248 [52] standard.
- Open architecture where extensions (packages) definition work on the interface may be carried out.

6a.7.7 Reference Point CSCF – CSCF (Mw Reference Point)

The Mw reference point allows the communication and forwarding of signalling messaging between CSCFs, e.g. during registration and session control.

Microsoft - Exhibit 1012
Microsoft v. Lemko- IPR2023-00531
Page 126 of 203

6a.7.8 (void)

6a.7.9 (void)

6a.7.10 Reference Point CSCF – BGCF (Mi reference point)

This reference point allows the Serving CSCF to forward the session signalling to the Breakout Gateway Control Function for the purpose of interworking to the PSTN networks.

The Mi reference point is based on external specifications i.e. SIP [61].

6a.7.11 Reference Point BGCF – MGCF (Mj reference point)

This reference point allows the Breakout Gateway Control Function to forward the session signalling to the Media Gateway Control Function for the purpose of interworking to the PSTN networks.

The Mj reference point is based on external specifications i.e. SIP [61].

6a.7.12 Reference Point BGCF/IBCF – BGCF (Mk reference point)

This reference point allows the Breakout Gateway Control Function/IBCF to forward the session signalling to another Breakout Gateway Control Function.

The Mk reference point is based on external specifications i.e. SIP [61].

6a.7.13 Reference Point CSCF- SLF (Dx Reference Point)

This interface between CSCF and SLF is used to retrieve the address of the HSS which holds the subscription for a given user.

This interface is not required in a single HSS environment. An example for a single HSS environment is a server farm architecture.

Details are described in TS 23.228 [34], subclause 5.8.1.

6a.7.14 Reference Point to IPv6 network services (Mb reference point)

Via the Mb reference point IPv6 network services are accessed. These IPv6 network services are used for user data transport. Note, that GPRS provides IPv6 network services to the UE, i.e. the GPRS Gi reference point and the IMS Mb reference point may be the same.

6a.7.15 Reference Point S-CSCF – AS (ISC Reference Point)

This interface between Serving CSCF and the Application Servers (i.e., SIP Application Server, OSA Service Capability Server, or CAMEL IM-SSF) is used to provide services for the IMS.

Details are described in TS 23.228 [34], subclause 4.2.4.

6a.7.16 Reference Point HSS – SIP AS or OSA SCS (Sh Reference Point)

The Application Server (SIP Application Server and/or the OSA Service Capability Server) may communicate to the HSS. The Sh interface is used for this purpose. Details are described in TS 23.228 [34], subclause 4.2.4.

Microsoft - Exhibit 1012
Microsoft v. Lemko- IPR2023-00531
Page 127 of 203

6a.7.17 Reference Point HSS – CAMEL IM-SSF (Si Reference Point)

The CAMEL Application Server (IM-SSF) may communicate to the HSS. The Si interface is used for this purpose. Details are described in TS 23.228 [34], subclause 4.2.4.

6a.7.18 Reference Point UE – AS (Ut Reference Point)

The Ut interface resides between the UE and the SIP Application Server.

The Ut interface enables the user to manage information related to his services. Such as creation and assignment of Public Service Identities, management of authorization policies that are used e.g. by Presence service, conference policy management, etc.

The AS may need to exhibit security related functions for the Ut interface, the details of these security functions are described in TS 33.222 [72].

For the protocol at the Ut reference point HTTP shall be supported.

6a.7.19 Reference Point AS- SLF (Dh Reference Point)

This interface between AS and SLF is used to retrieve the address of the HSS which holds the subscription for a given user.

This interface is not required in a single HSS environment. An example for a single HSS environment is a server farm architecture.

Details are described in TS 23.228 [34], subclause 5.8.1.

6a.7.20 Reference Point CSCF/BGCF - IBCF (Mx Reference Point)

The Mx reference point allows the communication and forwarding of signalling messages between a CSCF/BGCF and an IBCF, e.g. during session establishment.

6a.7.21 Reference Point IBCF - TrGW (Ix Reference Point)

This interface is used by the IBCF to control the TrGW, e.g. to request network address translation binding.

6a.7.22 Reference Point I-CSCF – AS (Ma Reference Point)

This interface between Interrogating-CSCF and the Application Servers (i.e. SIP Application Server, OSA Service Capability Server, or CAMEL IM-SSF) is used to forward SIP requests destined to a Public Service Identity hosted by an Application Server directly to the Application Server.

Details are described in TS 23.228 [34], subclause 5.4.12.

6a.7.23 Reference Point P-CSCF – IMS Access Gateway (Iq Reference Point)

The Iq reference point is between the Proxy-CSCF and the IMS Access Gateway. It conveys the necessary information that is needed to allocate and release transport addresses.

Details are described in TS 23.228 [34], Annex G.

Microsoft - Exhibit 1012
Microsoft v. Lemko- IPR2023-00531
Page 128 of 203

6a.8 Reference Points for Service Based Local Policy Control

6a.8.1 Reference Point GGSN – PDF (Go Reference Point)

This interface allows the Policy Decision Function (PDF) to apply policy to the bearer usage in the GGSN. For more information see TS 23.207 [28]

6a.8.2 Reference Point PDF – Application Function (Gq Reference Point)

This interface allows for dynamic QoS-related service information to be exchanged between the Policy Decision Function (PDF) and the Application Function (AF). This information is used by the PDF for service based local policy decisions. For more information see TS 23.207 [28].

6a.9 Reference Points for 3GPP/WLAN Interworking

6a.9.1 Reference point 3GPP AAA Server - HLR (D'/Gr' Reference Point)

This is the reference point between the 3GPP AAA server and the HLR up to and including Rel-4 and the HSS in Rel-5. The functionality of this reference point is similar to that of the Wx reference point. For more information see TS 23.234 [67].

6a.9.2 Reference point WLAN access network - 3GPP AAA Proxy/Server (Wa Reference Point)

This is the reference point between the WLAN access network and 3GPP AAA Proxy or Server. The AAA protocol on this reference point is used to transport authentication, authorization and charging data.

6a.9.3 Reference point 3GPP AAA Server – 3GPP AAA Proxy (Wd Reference Point)

This is the reference point between the 3GPP AAA Server and Proxy. the purpose of the protocols crossing this reference point is to transport authentication, authorization and related information. For more information see TS 23.234 [67].

6a.9.4 Reference point 3GPP AAA Server/Proxy - WAG (Wg Reference Point)

This is the reference point between the 3GPP AAA server/proxy and WAG. It is used to provide information needed by the WAG to perform policy enforcement functions for authorised users and to transport per-tunnel based charging information from the WAG to the AAA Proxy in roaming scenarios.

6a.9.5 Reference point PDG - packet data networks (Wi Reference Point)

This is the reference point between the PDG and a packet data network. It may be an operator external public or private packet data network or an intra operator packet data network, e.g. for provision of IMS services.

6a.9.6 Reference Point 3GPP AAA Server/Proxy - PDG (Wm Reference Point)

This is the reference point between the 3GPP AAA server/proxy and PDG. The functionality of this reference point is to enable:

- The 3GPP AAA Server/Proxy to retrieve tunneling attributes and WLAN UE's IP configuration parameters from/via Packet Data Gateway

Microsoft - Exhibit 1012
Microsoft v. Lemko- IPR2023-00531
Page 129 of 203

- Carrying messages for service authentication and authorization
- Carrying authentication data for the purpose of tunnel establishment, tunnel data authentication and encryption.

For more information see TS 23.234 [67].

6a.9.7 Reference Point WAG - WLAN access network (Wn Reference Point)

This is the reference point between the WAG and the WLAN access network. It is used to force traffic between a WLAN UE and PDG to go through the WAG.

6a.9.8 Reference Point WAG - PDG (Wp Reference Point)

This is the reference point between WAG and PDG. It is used to transport the Wu reference point protocol data packets.

6a.9.9 Reference point WLAN UE - PDG (Wu Reference Point)

This is the reference point between the 3GPP WLAN UE and PDG. The functionality of this reference point is to establish a tunnel between WLAN UE and PDG and to exchange data packets between WLAN UE and PDG.

6a.9.10 Reference point WLAN UE - WLAN access network (Ww Reference Point)

This is the reference point between the 3GPP WLAN UE and WLAN access network. The functionality of this reference point is specified by IEEE and outside the scope of 3GPP.

6a.9.11 Reference point 3GPP AAA Server - HSS (Wx Reference Point)

This is the reference point between the 3GPP AAA server and HSS. The functionality of this reference point is to enable:

- Retrieval of authentication vectors
- Retrieval of WLAN access-related subscriber information (profile)
- Registration of the 3GPP AAA Server of an authorised WLAN user in the HSS
- Indication of change of subscriber profile
- Retrieval of online charging / offline charging function addresses from HSS.
- Retrieval of service related information

For more information see TS 23.234 [67].

6a.9.12 Reference point 3GPP AAA Server - SLF (Dw reference point)

This reference point is between the 3GPP AAA Server and the SLF. The prime purpose of the protocol(s) crossing this reference point is to enable the 3GPP AAA Server to find the address of the HSS which holds the subscriber data for a given user identity in a configuration with multiple separately addressable HSSs.

Microsoft - Exhibit 1012
Microsoft v. Lemko- IPR2023-00531
Page 130 of 203

6a.10 MBMS specific reference points

6a.10.1 Reference point GGSN – BM-SC (Gmb Reference Point)

This reference point is used to exchange signalling between GGSN and BM-SC. This represents the network side boundary of the MBMS Bearer Service from a control plane perspective. This includes user specific Gmb signalling and MBMS bearer service specific signalling. The details for this reference point are described in TS 23.246 [70].

6a.11 Reference Points for Flow Based Charging

6a.11.1 Reference Point GGSN – CRF (Gx Reference Point)

This interface allows the Charging Rules Function (CRF) to control the Flow Based Charging functionality in the GGSN by means of providing the applicable charging rules. For more information see TS 23.125 [29].

6a.11.2 Reference Point CRF – Application Function (Rx Reference Point)

This interface allows for dynamic charging-related service information to be exchanged between the Charging Rules Function (CRF) and the Application Function (AF). This information is used by the CRF for the selection and completion of charging rules. For more information see TS 23.125 [29].

6a.12 Reference Points for 3GPP Generic User Profile (GUP)

6a.12.1 Reference Point GUP Server – Applications (Rg Reference Point)

The Rg reference point resides between the GUP Server and the Applications.

The Rg reference point allows applications to create, read, modify and delete any user profile data using the harmonized access interface. The GUP Server locates the data repositories responsible of the storage of the requested profile component(s).

The details of the Rg reference point are described in TS 23.240 [71].

6a.12.2 Reference Point GUP Server – HSS and Applications – HSS (Rp Reference Point)

The Rp reference point resides between the GUP Server and the HSS, and between the Applications and the HSS.

The Rp reference point enables the GUP Server and the Applications to access GUP Data Repositories. The HSS is one of the GUP Data Repositories. It stores the IM CN Subsystem user related data.

The details of the Rp reference point are described in TS 23.240 [71].

7 Reference points between the PLMN and other networks

The reference points between the PLMN and other networks, including dedicated networks, are described in the 49-series of Technical Specifications and in the 29-series of Technical Specifications.

Microsoft - Exhibit 1012
Microsoft v. Lemko- IPR2023-00531
Page 131 of 203

7.1 Reference point fixed networks - MSC

The MSC is based on a normal ISDN exchange. It has, for call control, the same reference points as the fixed network exchanges. The signalling reference point considered in the Technical Specifications is related to the signalling system No. 7 User Parts TUP and ISUP associated to the circuits used for incoming and outgoing calls.

7.2 Reference point GGSN - packet data networks (Gi reference point)

This is the reference point between the GGSN and a packet data network. It may be an operator external public or private packet data network or an intra operator packet data network, e.g. for provision of IMS services.

7.3 Reference point GMLC - external LCS Client (Le reference point)

At this reference point external LCS Clients request services from the PLMN.

7.4 Reference Point CSCF/IBCF – Multimedia IP networks (Mm Reference Point)

This is an IP interface between CSCF/IBCF and IP networks. This interface is used, for example, to receive a session request from another SIP server or terminal. Detailed specifications of the Mm reference point are not provided in this release of specifications.

7.5 (void)

7.6 Reference point PDG - packet data networks (Wi reference point)

This is the reference point between the PDG and a packet data network. It may be an operator external public or private packet data network or an intra operator packet data network, e.g. for provision of IMS services.

7.7 Reference Point WAG – WLAN access network (Wn reference point)

This is the reference point between the WAG and the WLAN access network. It is used to force traffic between a WLAN UE and PDG to go through the WAG.

Microsoft - Exhibit 1012
Microsoft v. Lemko- IPR2023-00531
Page 132 of 203

Annex A (informative): Description for GLR-related entities and interfaces

This annex describes the GLR-related entities and the interfaces. This annex is an informative annex. The 'informative' means just that the GLR is an optional functional entity to optimize signalling traffic between PLMNs. Therfore, this annex is normative to a PLMN which introduce the GLR.

A.1 Normative references

[A1] 3GPP TS 23.119: "3rd Generation Partnership Project; Technical Specification Group Core Network; Gateway Location Register (GLR); Stage2".

A.2 Definitions related to Gateway Location Register (GLR)

A.2.1 Gateway Location Register (GLR)

This entity handles location management of roaming subscriber in visited network without involving HLR. The location register function in the GLR stores subscription information and routeing information for both CS services and PS services. This entity can be only located in a visited PLMN.

A.2.2 Intermediate Mobile-services Switching Centre (IM-MSC)

This entity is used as serving MSC towards home network and relay some messages between home network and serving MSC. This entity can be only located in a visited PLMN.

A.2.3 Intermediate GPRS Serving Node (IM-GSN)

This entity is used as serving GSN towards home network and relay some PDU notification messages between serving GSN and Gateway GSN. This entity can be only located in a visited PLMN.

A.3 The entities of the mobile system

A.3.1 Gateway Location Register (GLR)

GLR is pseudo-HLR located in visited network. The roamer's information is stored in it and handles location management of it within the network. Presence of GLR is invisible from home network therefore interface between HLR and GLR is same as one of HLR and VLR. Also, the interface between the VLR and GLR is the same as the one between the VLR and the HLR.

The GLR is a logical node and acts as a VLR for MAP signalling (e.g. PRN) from the HPLMN point of view. The GLR acts as a HLR for MAP signalling (e.g. Register SS) from the VPLMN point of view.

The GLR also acts as an SGSN for MAP signalling only (e.g. ISD) from the HPLMN point of view. This is because MAP operations such as ISD must be terminated at the GLR for the purpose of subscriber data caching.

The GLR shall terminate all TC dialogues and start new dialogues towards the HLR or the VLR. The GLR shall generate SCCP address of the HLR (i.e. E.214 MGT) from IMSI.

Microsoft - Exhibit 1012
Microsoft v. Lemko- IPR2023-00531
Page 133 of 203

A.3.2 Intermediate Mobile-services Switching Centre (IM-MSC)

The Intermediate MSC (IM-MSC) is the logical node, which represent MSCs in the visited network. Some service features use the MSC Number stored in the HLR directly to deliver message from a certain node in home network (e.g. SMS-GMSC) to serving MSC in visited network. In such case, the message is firstly distributed to representative MSC (i.e. IM-MSC) and it relays it to actual serving MSC interrogating routing information to GLR.

- The Intermediate MSC (IM-MSC) is a logical node and represents the VMSC in the GLR equipped VPLMN.
- The IM-MSC acts as the VMSC for the HPLMN in the same way that the GLR acts as a VLR for HPLMN. The IM-MSC terminates MAP signalling from the HPLMN towards the VMSC and forwards the signal to the actual VMSC.
- The IM-MSC has an address interrogation function with which it is able to obtain the actual VMSC Number from the GLR.
- The IM-MSC is implemented in the same physical node as the one in which the GLR is implemented.
- The GLR alters the VMSC Number to the IM-MSC Number within an Update Location message.
- The IM-MSC Number is the E.164 Number assigned to the IM-MSC [53].
- The interrogation function of the IM-MSC is similar to that in the SMS-GMSC.

A.3.3 Intermediate GPRS Serving Node (IM-GSN)

The Intermediate GSN (IM-GSN) is a logical node and represents the SGSN for some GTP signalling termination in a GLR equipped VPLMN.

The IM-GSN acts as an SGSN for ***only some GTP signalling messages*** (i.e. PDU_Notification request/response, PDU_Notification_reject request/response) from the HPLMN point of view. The IM-GSN terminates these GTP signalling messages from the HPLMN towards SGSN and forwards the signal to the actual SGSN. The IM-GSN has an address interrogation function with which it is able to request the actual SGSN address from the GLR.

Apart from the case described above (i.e. PDU_Notification request/response, PDU_Notification_reject request/response), all other GTP signalling should be handled directly between the SGSN and the GGSN.

NOTE: ***MAP signalling*** towards the SGSN is ***NOT*** terminated at the IM-GSN. Instead it is terminated at the GLR.

A.4 Configuration of a Public Land Mobile Network

A.4.1 Basic configuration with GLR introduction

In the basic configuration with GLR introduction presented in figure A.1, all the functions related to GLR introduction are considered implemented in different equipments. Therefore, all the interfaces within PLMN are external. Interfaces GLa, GLb, GLc, GLd, GLf, GLg, GLh, and GLi need the support of the Mobile Application Part of the signalling system No. 7 to exchange the data necessary to provide the mobile service. No protocols for the GLe interface are standardized. GLj and GLk need the support of GPRS Tunneling Protocol - Control to provide the packet domain services.

Microsoft - Exhibit 1012
Microsoft v. Lemko- IPR2023-00531
Page 134 of 203

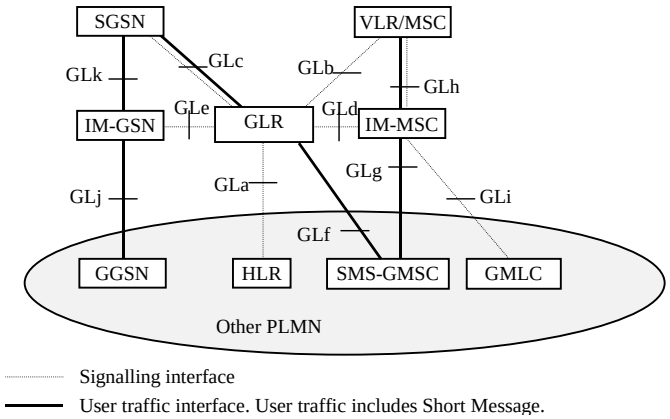

Figure A.1: Configuration of a PLMN and interfaces with GLR

A.5 PLMN interfaces

A.5.1 Interface between the HLR and the GLR (GLa-interface)

In circuit switched domain, this interface is the same as that between the VLR and the HLR (see TS 29.002 [26]). The HLR regards the GLR as the VLR via this interface. On the other hand, in packet switched domain, this interface is the same as that between the SGSN and the HLR (see TS 29.002 [26]). The HLR regards the GLR as the SGSN via this interface

A.5.2 Interface between the VLR and the GLR (GLb-interface)

This interface is the same as those between the VLR and the HLR (see TS 29.002 [26]). The VLR regards the GLR as the HLR via this interface.

A.5.3 Interface between the SGSN and the GLR (GLc-interface)

This interface is the same as those between the SGSN and the HLR (see TS 29.002 [26]). The SGSN regards the GLR as the HLR via this interface.

A.5.4 Interface between the GLR and the IM_MSC (GLd-interface)

In the network with the GLR, when the IM_MSC receives a message, it interrogates the GLR for the routing information of the MSC. However, this interface is internal because GLR and IM-MSC are implemented in the same physical node and the protocol on this interface is not specified.

A.5.5 Interface between the GLR and the IM_GSN (GLe-interface)

In the network with the GLR when the IM_GSN receiving a PDU notification from the GGSN, the IM_GSN relays the notification to the SGSN by interrogating via the interface the routing information to the GLR. The interrogation uses the same operation on the interface between the SGSN and the HLR (see TS 29.002 [26]).

Microsoft - Exhibit 1012
Microsoft v. Lemko- IPR2023-00531
Page 135 of 203

A.5.6 Interface between the SMS-GMSC and the GLR (GLf-interface)

This interface is used to forward mobile-terminated short messages in the network with the GLR in case of SMS transfer over GPRS. Signalling on this interface uses the Mobile Application Part (MAP) (see TS 29.002 [26]).

The SMS-GMSC regards the GLR as the SGSN via this interface.

A.5.7 Interface between the SMS-GMSC and the IM_MSC (GLg-interface)

This interface is used to forward short messages in the network with the GLR in case of SMS transfer over non-GPRS. Signalling on this interface uses the Mobile Application Part (MAP) (see TS 29.002 [26]).

The SMS-GMSC regards the IM_MSC as the MSC via this interface.

A.5.8 Interface between the MSC and the IM_MSC (GLh-interface)

This interface is used to forward short messages in the network with the GLR in case of SMS transfer over non-GPRS. Also this interface is used to exchange data needed by the MSC to perform subscriber authorization and allocate network resources. Signalling on this interface uses the Mobile Application Part (MAP) (see TS 29.002 [26]).

A.5.9 Interface between the GMLC and the IM_MSC (GLi-interface)

Also this interface is used to exchange data needed by the MSC to perform subscriber authorization and allocate network resources. Signalling on this interface uses the Mobile Application Part (MAP) (see TS 29.002 [26]).

The GMLC regards the IM_MSC as the MSC via this interface.

A.5.10 Interface between the GGSN and the IM_GSN (GLj-interface)

In the network with the GLR when receiving a PDP PDU from the external network the GGSN sends a notification to the IM_GSN by the routing information from the HLR (see TS 29.060 [51]). The GGSN regards the IM_GSN as the SGSN via this interface.

A.5.11 Interface between the SGSN and the IM_GSN (GLk-interface)

In the network with the GLR when receiving a PDP notification from the GGSN, the IM_GSN relays the notification to the SGSN by the routing information from the GLR (see TS 29.060 [51]). The SGSN regards the IM_GSN as the GGSN via this interface.

Microsoft - Exhibit 1012
Microsoft v. Lemko- IPR2023-00531
Page 136 of 203

Annex B (informative): Change history

Change history								
Date	**TSG #**	**TSG Doc.**	**CR**	**Rev**	**Subject/Comment**	**Cat**	**Old**	**New**
09/1999	-	-	-	-	renumberring of the present document from 03.02 to 23.002 (23.002 v.3.0.0 identical to 03.02 v.7.0.0)	-	03.02v7.0.0	23.002v3.0.0
10/1999	SP-05	SP-99397	0001	-	Incorporation of UMTS aspects	B	3.0.0	3.1.0
01/2000	SP-06	SP-99546	0002	1	Addition of GLR related descriptions. (also MCC update of some references)	B	3.1.0	3.2.0
03/2000	SP-07	SP-000084	0004	-	General improvements of the split between section 3 (Definitions and abbreviations) and section 4 (The entities of the mobile system).	F	3.2.0	3.3.0
03/2000	SP-07	SP-000084	0005	1	Re-ordering of section 4 (The entities of the mobile system).	D	3.2.0	3.3.0
03/2000	SP-07	SP-000084	0006	-	Re-ordering of section 5 (Configuration of a Public Land Mobile Network).	D	3.2.0	3.3.0
03/2000	SP-07	SP-000084	0007	-	Re-ordering of section 6 ("PLMN interfaces").	D	3.2.0	3.3.0
03/2000	SP-07	SP-000084	0008	-	Simplification of the figure 1 (configuration of a PLMN and interfaces)	D	3.2.0	3.3.0
03/2000	SP-07	SP-000084	0009	1	Introduction of CAMEL aspects.	B	3.2.0	3.3.0
03/2000	SP-07	SP-000084	0011	1	Introduction of CBS aspects	B	3.2.0	3.3.0
03/2000	SP-07	SP-000084	0012	2	Add LCS enhancements	C	3.2.0	3.3.0
03/2000	SP-07	SP-000084	0013	4	Define GSM LCS parts and add UMTS LCS "hooks" in the network architecture.	C	3.2.0	3.3.0
03/2000	SP-07	SP-000084	0014	1	Incorporation of network architecture material coming from section 4 of 29.002	F	3.2.0	3.3.0
10/2000	SP-09	SP-000449	0016	-	Introduction of R00 Definitions from 23.821 into 23.002	B	3.3.0	5.0.0
10/2000	SP-09	SP-000449	0017	-	CR on functional elements	B	3.3.0	5.0.0
10/2000	SP-09	SP-000449	0018	-	CR on reference model from 23.821	B	3.3.0	5.0.0
10/2000	SP-09	SP-000449	0019	-	CR on reference points from 23.821	B	3.3.0	5.0.0
12/2000	SP-10	SP-000587	0024	-	CAMEL for the PS domain	F	5.0.0	5.1.0
03/2001	SP-11	SP-010115	0033	1	Clarification of the difference between MGW in BICCN and IMS	D	5.1.0	5.2.0
03/2001	SP-11	SP-010115	0034	-	Introduction of Iu-CS and Iu-PS interfaces to BSS of type GERANin the network architecture	A	5.1.0	5.2.0
03/2001	SP-11	SP-010115	0035	1	CSCF-GGSN interface	B	5.1.0	5.2.0
03/2001	SP-11	SP-010115	0041	-	Missing Nc interface in basic configuration figure	A	5.1.0	5.2.0
03/2001	SP-11	SP-010115	0044	2	Clarification to the GGSN/PCF interface to the R5 reference architecture	F	5.1.0	5.2.0
03/2001	SP-11	SP-010115	0046	-	Resolution of editor's note in the MGW description	A	5.1.0	5.2.0
03/2001	SP-11	SP-010115	0050	-	Signalling and User Traffic Interfaces	A	5.1.0	5.2.0
06/2001	SP-12	SP-010329	0053	1	Addition of Radio Access Technologies	A	5.2.0	5.3.0
06/2001	SP-12	SP-010329	0062	1	Clarification of the role of the SGWs	A	5.2.0	5.3.0
06/2001	SP-12	SP-010329	0051	3	Addition of GTT Specific sntities	B	5.2.0	5.3.0
06/2001	SP-12	SP-010329	0037	1	HSS / HLR structuring	C	5.2.0	5.3.0
10/2001	SP-13	SP-010511	0061	2	CR on Introduction of Dx Reference Point in the IMS Reference Architecture"	F	5.3.0	5.4.0
10/2001	SP-13	SP-010511	0063	1	CR on "Update the IP MM Subsystem configuration to include the BGCF node"	F	5.3.0	5.4.0
10/2001	SP-13	SP-010511	0068	-	CR on "MRF functionality"	C	5.3.0	5.4.0
01/2002	SP-14	SP-010708	0070	-	Editorial alignment of 23.002 on CSCF	D	5.4.0	5.5.0
01/2002	SP-14	SP-010708	0072	-	Aligning MGW descriptions	D	5.4.0	5.5.0
01/2002	SP-14	SP-010708	0074	-	Correction of abbreviation of CSCF	D	5.4.0	5.5.0
01/2002	SP-14	SP-010708	0075	2	HSS section clean up	C	5.4.0	5.5.0
01/2002	SP-14	SP-010708	0079	-	Correction of Gi reference point definition	F	5.4.0	5.5.0
01/2002	SP-14	SP-010708	0082	-	Deleting SIWF functionality	A	5.4.0	5.5.0
01/2002	-	MCC correction	-	-	Introduction of section 6a.7.13 on Dx Reference Point from CR #0061r2	-	5.4.0	5.5.0
03/2002	SP-15	SP-020165	0077	3	Editorial correction to References	D	5.5.0	5.6.0
03/2002	SP-15	SP-020165	0078	2	Introduction of an IMS bearer reference point	F	5.5.0	5.6.0
03/2002	SP-15	SP-020165	0085	-	Corrections to the Radio Network System (node B) definitions	F	5.5.0	5.6.0
03/2002	SP-15	SP-020165	0087	-	Nb and Nc reference points - editorial corrections	D	5.5.0	5.6.0
03/2002	SP-15	SP-020165	0090	-	Deletion of Reference Point towards SCP	F	5.5.0	5.6.0
03/2002	SP-15	SP-020165	0091	1	BGCF: Alignment to 23.228	F	5.5.0	5.6.0
03/2002	SP-15	SP-020165	0093	-	Removal of the Sr Reference point	F	5.5.0	5.6.0

Commented [AS1]: Implementor's changes to CR #016:
Rel 4 and Rel 5: The definition of the UE (proposed section 3.3) has not been introduced.
Reason: it is obviously conflicting with the definition of the Mobile Station (in section 4.3), and the new proposed definition of the UE is less precise than the present one of the MS: in particular, the CR introduces non defined acronyms (TE, MT) and adds an editor's note.

Rel 4 and rel 5: The definition of the Service subsystem (proposed section 3.2.4) has not been introduced.
Reason: the definition is fuzzy and the concept is never used in 3GPP.

Rel 4 and rel 5: the section 3.3 introducing the CS and the PS domains has not been deleted. The text in section 3.3.1 and 3.3.2 on CS and PS domains has not been deleted.
Reason: Many TSs, among them 23.002 and 23.228, are making use of the PS and CS domains. The text explaining these concepts should not be deleted.

Remaining changes:
For Release 5: Introduction of the IM subsystem.

Commented [AS2]: Implementor's changes to CR#017:
Rel 5: A reference has been added to 23.228.

Rel 5: The HSS definition is moved next to the HLR definition.
Reason: these entities are functionally very similar and these two entities are mutually excluding each other (i.e. the data related to a given user are either located in an HLR or in an HSS, but not in both).

Rel 4 and 5: the first paragraph in the explanation of the R-SGW has not been introduced.
Reason: It is redundant with what is stated just bellow. Moreover, it introduces too many undefined concepts, like "R00 UMTS Teleservices domain" and "UMTS GPRS domain".

Rel 4 and Rel 5: the proposed text on MSC server and MGW has been introduced next to the existing text on MSC and not at the proposed place.
Reason: It was not clear in the CR that the MSC Server plus the MGW together offer the functions of the MSC. Now, they appear as sub-section of the "MSC" section. The text has also been slightly modified: "GSM/UMTS MSC" has been changed to "MSC"; references to 04.08 have been deleted.

Rel 5: the sentence "This is component in the R00 network is PSTN/PLMN termination point for a defined network. The functionality defined within [name of the entity] should be consistent with existing/ongoing industry protocols/interfaces that will satisfy the requirements.", repeated to almost all IM subsystem entities, has not been introduced.
Reason: this statement is general (it can be inserted to the definition of virtually all the PLMN entities), and as such does not provide any information.

Rel 5: the definition of Serving and Interrogating CSCF has been replaced by a summary of the definitions of 23.228 and a reference to 23.228.
Reason: for consistency reason, only one place has to be kept for the definition of these roles. 23.228 contains th ... [1]

Microsoft - Exhibit 1012
Microsoft v. Lemko- IPR2023-00531
Page 137 of 203

03/2002	SP-15	SP-020165	0123	2	Application Server Definition	F	5.5.0	5.6.0
06/2002	SP-16	SP-020310	0095	2	Alignment with TS23.271	F	5.6.0	5.7.0
06/2002	SP-16	SP-020310	0092	2	General updates due to Intra Domain Connection of RAN nodes to multiple CN nodes	F	5.6.0	5.7.0
06/2002	SP-16	SP-020310	0094	1	Security Gateway	F	5.6.0	5.7.0
09/2002	SP-17	SP-020530	0058	1	The usage of Iu-interface signalling is missing in the E-interface description	A	5.7.0	5.8.0
09/2002	SP-17	SP-020530	0097	2	Mc interface	F	5.7.0	5.8.0
09/2002	SP-17	SP-020530	0098	1	Clean-up	F	5.7.0	5.8.0
09/2002	SP-17	SP-020530	0103	1	IMS Reference Points	F	5.7.0	5.8.0
12/2002	SP-18	SP-020827	0112	1	Scope of TS 23.002	F	5.8.0	5.9.0
12/2002	SP-18	SP-020827	0115	2	Corrections in the LCS figures	A	5.8.0	5.9.0
12/2002	SP-18	SP-020827	0108	5	Corrections in the LCS descriptions of 23.002	A	5.8.0	5.9.0
12/2002	SP-18	SP-020827	0106	1	Service architecture	F	5.8.0	5.9.0
12/2002	SP-18	SP-020827	0110	-	PCF to PDF Changes	F	5.8.0	5.9.0
03/2003	SP-19	SP-030115	0121	2	LCS architecture in 5	F	5.9.0	5.10.0
03/2003	SP-19	SP-030115	0118	-	Change of reference to LIF document	F	5.9.0	5.10.0
03/2003	SP-19	SP-030115	0119	1	Management interface	B	5.9.0	6.0.0
03/2003	-	MCC correction	-	-	Editorial to correct cover page to indicate Rel-6 not Rel-5	-	6.0.0	6.0.1
06/2003	SP-20	SP-030299	0132	1	Architecture corrections	A	6.0.1	6.1.0
06/2003	SP-20	SP-030299	0124	-	Gd reference point	F	6.0.1	6.1.0
06/2003	SP-20	SP-030299	0128	1	Ge reference point	F	6.0.1	6.1.0
06/2003	SP-20	SP-030299	0129	2	Management interface	F	6.0.1	6.1.0
06/2003	SP-20	SP-030299	0127	2	SLF on Sh interface	B	6.0.1	6.1.0
09/2003	SP-21	SP-030521	0134	2	Use of Security Gateways	A	6.1.0	6.2.0
12/2003	SP-22	SP-030652	0135	4	Gq reference point	B	6.2.0	6.3.0
03/2004	SP-23	SP-040031	0136	-	Gq clean-up	F	6.3.0	6.4.0
06/2004	SP-24	SP-040312	0138	1	Introduction of WLAN Interworking functional elements in 23.002	F	6.4.0	6.5.0
06/2004	SP-24	SP-040312	0139	-	Introduction of WLAN Interworking reference points and configuration in 23.002	F	6.4.0	6.5.0
06/2004	SP-24	SP-040312	0141	2	Configuration of Presence Service	F	6.4.0	6.5.0
06/2004	SP-24	SP-040312	0142	1	Correction on the scope of the Ut reference point	F	6.4.0	6.5.0
06/2004	SP-24	SP-040312	0143	-	Missing Lr reference point in 23.002	F	6.4.0	6.5.0
12/2004	SP-26	SP-040750	0145	-	Floor control	F	6.5.0	6.6.0
12/2004	SP-26	SP-040750	0146	-	Removing GPS specifity for SAS to unify with RAN Technical Specifications	F	6.5.0	6.6.0
03/2005	SP-27	SP-050104	0148	2	Inclusion of WLAN functionality in HSS description	F	6.6.0	6.7.0
03/2005	SP-27	SP-050104	0153	-	Generalising Subscriber Location Function (SLF) to support WLAN and Removal of WLAN charging reference points and functional entities	F	6.6.0	6.7.0
06/2005	SP-28	SP-050332	0154	-	Missing MBMS Architecture entities	F	6.7.0	6.8.0
06/2005	SP-28	SP-050332	0156	1	Addition of Flow Based Charging architecture.	F	6.7.0	6.8.0
09/2005	SP-29	SP-050475	0157	3	Introduction of GUP Server in the network architecture	F	6.8.0	6.9.0
09/2005	SP-29	SP-050476	0159	1	Introduction of IMS ALG and TrGW	F	6.8.0	6.9.0
09/2005	SP-29	SP-050478	0160	-	Correction of Wg reference point	F	6.8.0	6.9.0
09/2005	SP-29	SP-050479	0162	1	Reference to OMA specifications used at Le and Lr interfaces	F	6.8.0	6.9.0
12/2005	SP-30	SP-050664	0163	1	Interface between I-CSCF and AS	F	6.9.0	6.10.0
12/2005	SP-30	SP-050670	0161	3	Routing by the MGCF	B	6.10.0	7.0.0
03/2006	SP-31	SP-060129	0169	1	Introduction of IBCF in 23.002	C	7.0.0	7.1.0

Microsoft - Exhibit 1012
Microsoft v. Lemko- IPR2023-00531
Page 138 of 203

Page 60: [1] Commented [AS2] Alain Sultan 6/2/2005 5:56:00 PM

Implementor's changes to CR#017:
Rel 5: A reference has been added to 23.228.

Rel 5: The HSS definition is moved next to the HLR definition.
Reason: these entities are functionally very similar and these two entities are mutually excluding each other (i.e. the data related to a given user are either located in an HLR or in an HSS, but not in both).

Rel 4 and 5: the first paragraph in the explanation of the R-SGW has not been introduced.
Reason: It is redundant with what is stated just bellow. Moreover, it introduces too many undefined concepts, like "R00 UMTS Teleservices domain" and "UMTS GPRS domain".

Rel 4 and Rel 5: the proposed text on MSC server and MGW has been introduced next to the existing text on MSC and not at the proposed place.
Reason: It was not clear in the CR that the MSC Server plus the MGW together offer the functions of the MSC. Now, they appear as sub-section of the "MSC" section. The text has also been slightly modified: "GSM/UMTS MSC" has been changed to "MSC"; references to 04.08 have been deleted.

Rel 5: the sentence "This is component in the R00 network is PSTN/PLMN termination point for a defined network. The functionality defined within [name of the entity] should be consistent with existing/ongoing industry protocols/interfaces that will satisfy the requirements.", repeated to almost all IM subsystem entities, has not been introduced.
Reason: this statement is general (it can be inserted to the definition of virtually all the PLMN entities), and as such does not provide any information.

Rel 5: the definition of Serving and Interrogating CSCF has been replaced by a summary of the definitions of 23.228 and a reference to 23.228.
Reason: for consistency reason, only one place has to be kept for the definition of these roles. 23.228 contains the most recent ones and is more appropriate place to handle these definitions.

Rel 5: "R00 all-IP network" has been replaced by "IM subsystem".

Ex 0001

ETSI TS 123 002 V7.1.0 (2006-03)

Technical Specification

Digital cellular telecommunications system (Phase 2+);
Universal Mobile Telecommunications System (UMTS);
Network architecture
(3GPP TS 23.002 version 7.1.0 Release 7)

Microsoft - Exhibit 1012
Microsoft v. Lemko- IPR2023-00531
Page 141 of 203

Reference
RTS/TSGS-0223002v710

Keywords
GSM, UMTS

ETSI

650 Route des Lucioles
F-06921 Sophia Antipolis Cedex - FRANCE

Tel.: +33 4 92 94 42 00 Fax: +33 4 93 65 47 16

Siret N° 348 623 562 00017 - NAF 742 C
Association à but non lucratif enregistrée à la
Sous-Préfecture de Grasse (06) N° 7803/88

Important notice

Individual copies of the present document can be downloaded from:
http://www.etsi.org

The present document may be made available in more than one electronic version or in print. In any case of existing or perceived difference in contents between such versions, the reference version is the Portable Document Format (PDF). In case of dispute, the reference shall be the printing on ETSI printers of the PDF version kept on a specific network drive within ETSI Secretariat.

Users of the present document should be aware that the document may be subject to revision or change of status. Information on the current status of this and other ETSI documents is available at
http://portal.etsi.org/tb/status/status.asp

If you find errors in the present document, please send your comment to one of the following services:
http://portal.etsi.org/chaircor/ETSI_support.asp

Copyright Notification

No part may be reproduced except as authorized by written permission.
The copyright and the foregoing restriction extend to reproduction in all media.

© European Telecommunications Standards Institute 2006.
All rights reserved.

DECT™, **PLUGTESTS**™ and **UMTS**™ are Trade Marks of ETSI registered for the benefit of its Members.
TIPHON™ and the **TIPHON logo** are Trade Marks currently being registered by ETSI for the benefit of its Members.
3GPP™ is a Trade Mark of ETSI registered for the benefit of its Members and of the 3GPP Organizational Partners.

Microsoft - Exhibit 1012
Microsoft v. Lemko- IPR2023-00531
Page 142 of 203

Intellectual Property Rights

IPRs essential or potentially essential to the present document may have been declared to ETSI. The information pertaining to these essential IPRs, if any, is publicly available for **ETSI members and non-members**, and can be found in ETSI SR 000 314: *"Intellectual Property Rights (IPRs); Essential, or potentially Essential, IPRs notified to ETSI in respect of ETSI standards"*, which is available from the ETSI Secretariat. Latest updates are available on the ETSI Web server (http://webapp.etsi.org/IPR/home.asp).

Pursuant to the ETSI IPR Policy, no investigation, including IPR searches, has been carried out by ETSI. No guarantee can be given as to the existence of other IPRs not referenced in ETSI SR 000 314 (or the updates on the ETSI Web server) which are, or may be, or may become, essential to the present document.

Foreword

This Technical Specification (TS) has been produced by ETSI 3rd Generation Partnership Project (3GPP).

The present document may refer to technical specifications or reports using their 3GPP identities, UMTS identities or GSM identities. These should be interpreted as being references to the corresponding ETSI deliverables.

The cross reference between GSM, UMTS, 3GPP and ETSI identities can be found under http://webapp.etsi.org/key/queryform.asp .

Microsoft - Exhibit 1012
Microsoft v. Lemko- IPR2023-00531
Page 143 of 203

Contents

Intellectual Property Rights 2

Foreword 2

Foreword 8

Introduction 8

1 Scope 9

2 References 9

3 Definitions and abbreviations 12
3.1 Public Land Mobile Network (PLMN) 12
3.2 Core Network (CN) and Access Network (AN) 12
3.3 Circuit Switched (CS) and Packet Switched (PS) Domains 13
3.3.1 CS Domain 13
3.3.2 PS Domain 13
3.3a IP Multimedia subsystem (IMS) 13
3.4 Location register 13
3.5 Cell 14
3.6 Base Station Controller (BSC) area 14
3.7 Radio Network Controller (RNC) area 14
3.8 Location Area (LA) 14
3.9 Routing Area (RA) 14
3.10 MSC area 14
3.11 VLR area 14
3.12 SGSN area 14
3.13 Zones for Regional Subscription 14
3.14 Service area 15
3.15 Group call area 15
3.16 Pool-area 15

4 The basic entities of the mobile system 15
4.1 The Core Network (CN) entities 15
4.1.1 Entities common to the PS and CS domains 15
4.1.1.1 The Home Subscriber Server (HSS) 15
4.1.1.1.1 The Home Location Register (HLR) 16
4.1.1.1.2 The Authentication Centre (AuC) 17
4.1.1.1.3 HSS logical functions 17
4.1.1.2 The Visitor Location Register (VLR) 19
4.1.1.3 (void) 19
4.1.1.4 The Equipment Identity Register (EIR) 19
4.1.1.5 SMS Gateway MSC (SMS-GMSC) 20
4.1.1.6 SMS Interworking MSC (SMS-IWMSC) 20
4.1.1.7 Subscription Locator Function (SLF) 20
4.1.2 Entities of the CS domain 20
4.1.2.1 The Mobile-services Switching Centre (MSC) 20
4.1.2.1.1 MSC Server 21
4.1.2.1.2 Circuit Switched - Media Gateway Function (CS-MGW) 21
4.1.2.2 The Gateway MSC (GMSC) 21
4.1.2.2.1 Gateway MSC Server (GMSC Server) 22
4.1.2.3 The Interworking Function (IWF) 22
4.1.3 Entities of the PS domain 22
4.1.3.1 Serving GPRS Support Node (SGSN) 22
4.1.3.2 Gateway GPRS Support Node (GGSN) 23
4.1.3.3 Border Gateway (BG) 23
4.2 The Access Network (AN) entities 23
4.2.1 The Base Station System (BSS) 23
4.2.1.1 Base Station Controller (BSC) 24

Microsoft - Exhibit 1012
Microsoft v. Lemko- IPR2023-00531
Page 144 of 203

4.2.1.2 Base Transceiver Station (BTS) 24
4.2.2 The Radio Network System (RNS) 24
4.2.2.1 Radio Network Controller (RNC) 24
4.2.2.2 Node B 24
4.3 The Mobile Station (MS) 24

4a The specific entities of the mobile system 24
4a.1 The Group Call Register (GCR) entity 24
4a.2 (void) 25
4a.3 The Location Services (LCS) entities 25
4a.3.1 Location Services (LCS) entities in RAN 25
4a.3.2 Gateway Mobile Location Center (GMLC) 26
4a.3.3 Location Measurement Unit (LMU) 26
4a.4 CAMEL entities 27
4a.4.1 GSM Service Control Function (gsmSCF) 27
4a.4.2 GSM Service Switching Function (gsmSSF) 27
4a.4.3 GSM Specialised Resource Function (gsmSRF) 27
4a.4.4 GPRS Service Switching Function (gprsSSF) 27
4a.5 CBS-specific entities 27
4a.5.1 Cell Broadcast Center (CBC) 27
4a.6 Number Portability Specific entities 27
4a.6.1 IN-based solution: Number Portability Database (NPDB) 28
4a.6.2 Signalling Relay-based solution: Mobile Number Portability/Signalling Relay function (MNP-SRF) 28
4a.7 IP Multimedia (IM) Core Network (CN) Subsystem entities 28
4a.7.1 Call Session Control Function (CSCF) 28
4a.7.2 Media Gateway Control Function (MGCF) 28
4a.7.3 IP Multimedia Subsystem - Media Gateway Function (IMS-MGW) 28
4a.7.4 Multimedia Resource Function Controller (MRFC) 29
4a.7.4a Multimedia Resource Function Processor (MRFP) 29
4a.7.5 Void 29
4a.7.6 Breakout Gateway Control Function (BGCF) 29
4a.7.7 Application Server (AS) 29
4a.7.8 Interconnection Border Control Function (IBCF) 30
4a.7.9 Transition Gateway (TrGW) 30
4a.8 Signalling Gateway Function (SGW) 30
4a.9 Global Text Telephony Specific entities 30
4a.10 Security Gateway (SEG) 30
4a.11 Application Function (AF) 31
4a.12 Policy Decision Function (PDF) 31
4a.13 3GPP/WLAN Interworking entities 31
4a.13.1 WLAN UE 31
4a.13.2 3GPP AAA Proxy 31
4a.13.3 3GPP AAA Server 31
4a.13.4 WLAN Access Gateway (WAG) 31
4a.13.5 Packet Data Gateway (PDG) 31
4a.14 Multimedia Broadcast Multicast Service (MBMS) specific entities 31
4a.14.1 General 31
4a.14.2 Broadcast-Multicast Service Centre (BM-SC) 31
4a.15 Charging Rules Function (CRF) 32
4a.16 GUP Server 32

5 Configuration of a Public Land Mobile Network 32
5.1 Basic configuration 32
5.2 Configuration of LCS entities 34
5.2.1 Configuration of LCS entities for GERAN 34
5.2.2 Configuration of LCS entities for UTRAN 35
5.3 Configuration of CAMEL entities 35
5.4 Configuration of CBS entities 36
5.5 Configuration of IM CN Subsystem entities 36
5.6 Configuration of Signalling Gateway Function 38
5.7 Configuration of 3GPP/WLAN Interworking 39
5.8 Configuration of Presence service 39

Microsoft - Exhibit 1012
Microsoft v. Lemko- IPR2023-00531
Page 145 of 203

5.9 Configuration of MBMS entities 40

6 PLMN basic interfaces and reference points 40
6.1 Interfaces between Mobile Station and the Fixed Infrastructure 40
6.1.1 Interface between Mobile Station and Base Station System (Um-interface) 40
6.1.2 Interface between User Equipment and Radio Netwok System (Uu-interface) 40
6.2 Interface between the Core Network and the Access Network 41
6.2.1 Interfaces between the CS domain and the Access Network 41
6.2.1.1 Interface between the MSC and Base Station System (A-interface) 41
6.2.1.2 Interface between the MSC and Base Station System (Iu_CS interface) 41
6.2.1.3 Interface between the MSC and RNS (Iu_CS interface) 41
6.2.2 Interfaces between the PS domain and the Access Network 41
6.2.2.1 Interface between SGSN and BSS (Gb-interface) 41
6.2.2.2 Interface between SGSN and BSS (Iu_PS-interface) 41
6.2.2.3 Interface between SGSN and RNS (Iu_PS-interface) 42
6.3 Interfaces internal to the Access Network 42
6.3.1 Interface between BSC and BTS (Abis-interface) 42
6.3.2 Interface between RNC and Node B (Iub-interface) 42
6.3.3 Interface between two RNCs (Iur-interface) 42
6.4 Interfaces internal to the Core Network 42
6.4.1 Interfaces internal to the CS domain 42
6.4.1.1 Interface between the MSC server and its associated VLR (B-interface) 42
6.4.1.2 Interface between the HLR and the MSC server (C-interface) 42
6.4.1.3 Interface between the HLR and the VLR (D-interface) 43
6.4.1.4 Interface between MSC servers (E-interface) 43
6.4.1.5 Interface between MSC server and EIR (F-interface) 43
6.4.1.6 Interface between VLRs (G-interface) 43
6.4.1.7 Reference point (G)MSC server – CS-MGW (Mc Reference Point) 43
6.4.1.8 Reference Point MSC Server – GMSC Server (Nc Reference Point) 44
6.4.1.9 Reference Point CS-MGW – CS-MGW (Nb Reference Point) 44
6.4.2 Interfaces internal to the PS domain 44
6.4.2.1 Interface between SGSN and HLR (Gr-interface) 44
6.4.2.2 Interface between SGSN and GGSN (Gn- and Gp-interface) 44
6.4.2.3 Signalling Path between GGSN and HLR (Gc-interface) 44
6.4.2.4 Interface between SGSN and EIR (Gf-interface) 45
6.4.3 Interfaces used by CS and PS domains 45
6.4.3.1 Interface between MSC/VLR and SGSN (Gs-interface) 45
6.4.3.2 Interface between HLR and AuC (H-Interface) 45
6.4.3.3 Interface between SGSN and SMS-GMSC/SMS-IWMSC (Gd-Interface) 45

6a PLMN specific interfaces 45
6a.1 GCR-specific interface 45
6a.1.1 Interface between the MSC and its associated GCR (I-interface) 45
6a.2 (void) 46
6a.3 LCS-specific interfaces 46
6a.3.1 LCS interfaces using MAP 46
6a.3.2 (void) 46
6a.3.3 (void) 46
6a.3.4 (void) 46
6a.3.5 Interface between BSC and SMLC (Lb-interface) 46
6a.3.6 Interface between Peer SMLCs (Lp-interface) 46
6a.3.7 Interface between BTS and LMU (Um-interface) 46
6a.3.8 Interface between GMLC and External LCS Client (Le-interface) 47
6a.3.9 Interface between RNS and Stand-Alone LMU, UE (Uu-interface) 47
6a.3.10 Interface between SRNC and SAS (Stand-Alone SMLC) (Iupc-interface) 47
6a.3.11 Interface between GMLC and GMLC (Lr-interface) 47
6a.4 CAMEL-specific interfaces 47
6a.4.1 GMSC - gsmSSF interface 47
6a.4.2 gsmSSF - gsmSCF interface 47
6a.4.3 MSC - gsmSSF interface 47
6a.4.4 gsmSCF - HLR interface 47
6a.4.5 gsmSCF - gsmSRF interface 47

Microsoft - Exhibit 1012
Microsoft v. Lemko- IPR2023-00531
Page 146 of 203

6a.4.6 MSC - gsmSCF interface 48
6a.4.7 SGSN - gprsSSF interface 48
6a.4.8 gprsSSF - gsmSCF interface (Ge Reference Point) 48
6a.5 CBS-specific interfaces 48
6a.5.1 Interface between the CBC and RNS (Iu_BC Interface) 48
6a.6 Number portability specific interfaces 48
6a.6.1 IN-based solution 48
6a.6.1.1 NPDB to MSC interface 48
6a.6.2 Signalling Relay-based solution 48
6a.6.2.1 GMSC to MNP-SRF interface 48
6a.6.2.2 MNP-SRF to HLR interface 48
6a.7 IM Subsystem Reference Points 49
6a.7.1 Reference Point HSS – CSCF (Cx Reference Point) 49
6a.7.2 Reference Point CSCF – UE (Gm Reference Point) 49
6a.7.3 Reference Point MGCF – IMS-MGW (Mn Reference Point) 49
6a.7.4 Reference Point MGCF – CSCF (Mg Reference Point) 49
6a.7.5 (void) 49
6a.7.6 Reference Point CSCF - MRFC (Mr Reference Point) 50
6a.7.6a Reference Point MRFC – MRFP (Mp Reference Point) 50
6a.7.7 Reference Point CSCF – CSCF (Mw Reference Point) 50
6a.7.8 (void) 50
6a.7.9 (void) 50
6a.7.10 Reference Point CSCF – BGCF (Mi reference point) 50
6a.7.11 Reference Point BGCF – MGCF (Mj reference point) 50
6a.7.12 Reference Point BGCF/IBCF – BGCF (Mk reference point) 50
6a.7.13 Reference Point CSCF- SLF (Dx Reference Point) 50
6a.7.14 Reference Point to IPv6 network services (Mb reference point) 51
6a.7.15 Reference Point S-CSCF – AS (ISC Reference Point) 51
6a.7.16 Reference Point HSS – SIP AS or OSA SCS (Sh Reference Point) 51
6a.7.17 Reference Point HSS – CAMEL IM-SSF (Si Reference Point) 51
6a.7.18 Reference Point UE – AS (Ut Reference Point) 51
6a.7.19 Reference Point AS- SLF (Dh Reference Point) 51
6a.7.20 Reference Point CSCF/BGCF - IBCF (Mx Reference Point) 51
6a.7.21 Reference Point IBCF - TrGW (Ix Reference Point) 51
6a.7.22 Reference Point I-CSCF – AS (Ma Reference Point) 52
6a.7.23 Reference Point P-CSCF – IMS Access Gateway (Iq Reference Point) 52
6a.8 Reference Points for Service Based Local Policy Control 52
6a.8.1 Reference Point GGSN – PDF (Go Reference Point) 52
6a.8.2 Reference Point PDF – Application Function (Gq Reference Point) 52
6a.9 Reference Points for 3GPP/WLAN Interworking 52
6a.9.1 Reference point 3GPP AAA Server - HLR (D'/Gr' Reference Point) 52
6a.9.2 Reference point WLAN access network - 3GPP AAA Proxy/Server (Wa Reference Point) 52
6a.9.3 Reference point 3GPP AAA Server – 3GPP AAA Proxy (Wd Reference Point) 52
6a.9.4 Reference point 3GPP AAA Server/Proxy - WAG (Wg Reference Point) 53
6a.9.5 Reference point PDG - packet data networks (Wi Reference Point) 53
6a.9.6 Reference Point 3GPP AAA Server/Proxy - PDG (Wm Reference Point) 53
6a.9.7 Reference Point WAG - WLAN access network (Wn Reference Point) 53
6a.9.8 Reference Point WAG - PDG (Wp Reference Point) 53
6a.9.9 Reference point WLAN UE - PDG (Wu Reference Point) 53
6a.9.10 Reference point WLAN UE - WLAN access network (Ww Reference Point) 53
6a.9.11 Reference point 3GPP AAA Server - HSS (Wx Reference Point) 53
6a.9.12 Reference point 3GPP AAA Server - SLF (Dw reference point) 54
6a.10 MBMS specific reference points 54
6a.10.1 Reference point GGSN – BM-SC (Gmb Reference Point) 54
6a.11 Reference Points for Flow Based Charging 54
6a.11.1 Reference Point GGSN – CRF (Gx Reference Point) 54
6a.11.2 Reference Point CRF – Application Function (Rx Reference Point) 54
6a.12 Reference Points for 3GPP Generic User Profile (GUP) 54
6a.12.1 Reference Point GUP Server – Applications (Rg Reference Point) 54
6a.12.2 Reference Point GUP Server – HSS and Applications – HSS (Rp Reference Point) 54

7 Reference points between the PLMN and other networks 55

Microsoft - Exhibit 1012
Microsoft v. Lemko- IPR2023-00531
Page 147 of 203

7.1 Reference point fixed networks - MSC 55
7.2 Reference point GGSN - packet data networks (Gi reference point) 55
7.3 Reference point GMLC - external LCS Client (Le reference point) 55
7.4 Reference Point CSCF/IBCF – Multimedia IP networks (Mm Reference Point) 55
7.5 (void) 55
7.6 Reference point PDG - packet data networks (Wi reference point) 55
7.7 Reference Point WAG – WLAN access network (Wn reference point) 55

Annex A (informative): Description for GLR-related entities and interfaces 56

A.1 Normative references 56

A.2 Definitions related to Gateway Location Register (GLR) 56
A.2.1 Gateway Location Register (GLR) 56
A.2.2 Intermediate Mobile-services Switching Centre (IM-MSC) 56
A.2.3 Intermediate GPRS Serving Node (IM-GSN) 56

A.3 The entities of the mobile system 56
A.3.1 Gateway Location Register (GLR) 56
A.3.2 Intermediate Mobile-services Switching Centre (IM-MSC) 57
A.3.3 Intermediate GPRS Serving Node (IM-GSN) 57

A.4 Configuration of a Public Land Mobile Network 57
A.4.1 Basic configuration with GLR introduction 57

A.5 PLMN interfaces 58
A.5.1 Interface between the HLR and the GLR (GLa-interface) 58
A.5.2 Interface between the VLR and the GLR (GLb-interface) 58
A.5.3 Interface between the SGSN and the GLR (GLc-interface) 58
A.5.4 Interface between the GLR and the IM_MSC (GLd-interface) 58
A.5.5 Interface between the GLR and the IM_GSN (GLe-interface) 58
A.5.6 Interface between the SMS-GMSC and the GLR (GLf-interface) 59
A.5.7 Interface between the SMS-GMSC and the IM_MSC (GLg-interface) 59
A.5.8 Interface between the MSC and the IM_MSC (GLh-interface) 59
A.5.9 Interface between the GMLC and the IM_MSC (GLi-interface) 59
A.5.10 Interface between the GGSN and the IM_GSN (GLj-interface) 59
A.5.11 Interface between the SGSN and the IM_GSN (GLk-interface) 59

Annex B (informative): Change history 60

History 62

Microsoft - Exhibit 1012
Microsoft v. Lemko- IPR2023-00531
Page 148 of 203

Foreword

This Technical Specification (TS) has been produced by the 3rd Generation Partnership Project (3GPP).

The contents of the present document are subject to continuing work within the TSG and may change following formal TSG approval. Should the TSG modify the contents of the present document, it will be re-released by the TSG with an identifying change of release date and an increase in version number as follows:

Version x.y.z

where:

x the first digit:

1 presented to TSG for information;

2 presented to TSG for approval;

3 or greater indicates TSG approved document under change control.

y the second digit is incremented for all changes of substance, i.e. technical enhancements, corrections, updates, etc.

z the third digit is incremented when editorial only changes have been incorporated in the document.

Introduction

This document presents the possible architectures of the Universal Mobile Telecommuncation System (UMTS).

covering both UTRAN and GERAN radio access techonologies.

Clause 3 of the document contains the definition of the PLMN entities.

Clause 4 of the document contains the description of the basic entities of the PLMN, and clause 4a contains the description of the specific entities of the PLMN.

Clause 5 of the document contains the configuration of the PLMN.

Clauses 6, 6a and 7 of the document contain the PLMN's basic and specific interfaces and reference points and the PLMN's interfaces towards other networks.

Microsoft - Exhibit 1012
Microsoft v. Lemko- IPR2023-00531
Page 149 of 203

1 Scope

This document offers an overview of the PLMN and its architectures and configuration. The configuration and the functional entities of the PLMN and the interfaces between them are described on a general level in order to cope with possible implementations. These descriptions include interfaces between and within the core networks, the access networks, the user equipment, different service platforms, different domains and subsystems, and functional entities within domains and subsystems.

This document covers different architectural aspects with varying level of detail. In general, other specifications shall be referred to for further details; these specifications enable the reader to acquire the full understanding of a system or service feature.

Note that this document does not cover, or even list, all features of PLMNs.

2 References

The following documents contain provisions which, through reference in this text, constitute provisions of the present document.

- References are either specific (identified by date of publication, edition number, version number, etc.) or non-specific.
- For a specific reference, subsequent revisions do not apply.
- For a non-specific reference, the latest version applies. In the case of a reference to a 3GPP document (including a GSM document), a non-specific reference implicitly refers to the latest version of that document *in the same Release as the present document*.

[1] [void]

[1a] 3GPP TR 21.905: "Vocabulary for 3GPP Specifications".

[2] 3GPP TS 22.016: "International Mobile station Equipment Identities (IMEI)".

[2a] 3GPP TS 22.060: "General Packet radio Service (GPRS); Service description; Stage 1".

[2b] 3GPP TS 22.071: "Location Services (LCS); Service description; Stage 1".

[2c] 3GPP TS 22.078: "Customised Applications for Mobile network Enhanced Logic (CAMEL); Service description, Stage 1".

[3] 3GPP TS 23.003: " Numbering, addressing and identification".

[4] 3GPP TS 22.127: "Open Service Access (OSA)".

[5] 3GPP TS 23.008: "Organization of subscriber data".

[6] 3GPP TS 23.009: "Handover procedures".

[7] 3GPP TS 23.012: "Location Management Procedures".

[8] 3GPP TS 23.041: "Technical realization of Cell Broadcast Service (CBS)".

[9] [void]

[9a] 3GPP TS 23.060: "General Packet Radio Service (GPRS); Service description; Stage 2".

[10] [void]

[10a] 3GPP TS 43.064: "Digital cellular telecommunication system (Phase 2+); General Packet Radio service (GPRS); Overall description of the GPRS radio interface; Stage 2".

Microsoft - Exhibit 1012
Microsoft v. Lemko- IPR2023-00531
Page 150 of 203

[10b] 3GPP TS 25.305: "Stage 2 Functional Specification of UE Positioning in UTRAN".

[10c] 3GPP TS 23.078: "Customised Applications for Mobile network Enhanced Logic (CAMEL) Phase 3 - Stage 2".

[10d] 3GPP TS 43.059: "Functional Stage 2 Description of Location Services in GERAN"[11]ITU-T Recommendation Q.1214 (05/1995): "Distributed Functional Plane for Intelligent Network CS-1".

[11a] 3GPP TS 23.101: "General UMTS Architecture".

[11b] 3GPP TS 23.110: "UMTS Access Stratum); Services and Functions".

[12] 3GPP TS 24.002: "GSM - UMTS Public Land Mobile Network (PLMN) access reference configuration".

[13] 3GPP TS 48.001: "Base Station System - Mobile-services Switching Centre (BSS - MSC) interface; General aspects".

[14] 3GPP TS 48.002: "Base Station System - Mobile-services Switching Centre (BSS - MSC) interface; Interface principles".

[14a] 3GPP TS 25.410: "UTRAN Iu Interface: general aspects and principles".

[15] 3GPP TS 48.004: "Base Station System - Mobile-services Switching Centre (BSS - MSC) interface Layer 1 specification".

[16] 3GPP TS 48.006: "Signalling transport mechanism specification for the Base Station System - Mobile-services Switching Centre (BSS - MSC) interface".

[17] 3GPP TS 48.008: "Mobile-services Switching Centre - Base Station System (MSC - BSS) interface; Layer 3 specification".

[18] [void]

[19] 3GPP TS 48.051: "Base Station Controller - Base Transceiver Station (BSC - BTS) interface; General aspects".

[20] 3GPP TS 48.052: "Base Station Controller - Base Transceiver Station (BSC - BTS) interface; Interface principles".

[21] 3GPP TS 48.054: "Base Station Controller - Base Transceiver Station (BSC - BTS) interface; Layer 1 structure of physical circuits".

[22] 3GPP TS 48.056: "Base Station Controller - Base Transceiver Station (BSC - BTS) interface; Layer 2 specification".

[23] 3GPP TS 48.058: "Base Station Controller - Base Transceiver Station (BSC - BTS) interface; Layer 3 specification".

[24] 3GPP TS 48.060: "In-band control of remote transcoders and rate adaptors for full rate traffic channels".

[25] 3GPP TS 48.061: "In-band control of remote transcoders and rate adaptors for half rate traffic channels".

[26] 3GPP TS 29.002: "Mobile Application Part (MAP) specification".

[27] 3GPP TS 22.228: "Service requirements for the IP Multimedia Core Network Subsystem".

[28] 3GPP TS 23.207: "End-to-end Quality of Service (QoS) concept and architecture".

[29] 3GPP TS 23.125: "Overall high level functionality and architecture impacts of flow based charging; Stage 2".

[30] [void]

Microsoft - Exhibit 1012
Microsoft v. Lemko- IPR2023-00531
Page 151 of 203

[31] 3GPP TS 29.007: "General requirements on interworking between the Public Land Mobile Network (PLMN) and the Integrated Services Digital Network (ISDN) or Public Switched Telephone Network (PSTN)".

[32] 3GPP TS 29.010: "Information element mapping between Mobile Station - Base Station System (MS – BSS) and Base Station System - Mobile-services Switching Centre (BSS - MSC); Signalling procedures and the Mobile Application Part (MAP)".

[33] 3GPP TS 29.011: "Signalling interworking for supplementary services".

[34] 3GPP TS 23.228: "IP Multimedia Subsystem (IMS); Stage 2".

[35] 3GPP TR 41.103: "GSM Release 5 specifications".

[36] 3GPP TR 43.051: "Technical Specification Group GSM/EDGE Radio Access Network; Overall description, Stage 2".

[37] 3GPP TS 23.226: "Global Text Telephony (GTT); Stage 2".

[38] 3GPP TS 26.226: "Cellular Text Telephone Modem; General Description".

[39] 3GPP TS 23.016:"Subscriber data management; Stage 2".

[40] 3GPP TS 23.066: "Support of Mobile Number Portability (MNP); Technical realization; Stage 2".

[41] 3GPP TS 43.068: "Voice Group Call Service (VGCS); Stage 2".

[42] 3GPP TS 43.069: "Voice Broadcast Service (VBS); Stage 2".

[43] 3GPP TS 23.205: "Bearer independent circuit switched core network; Stage 2".

[44] 3GPP TS 48.014: "Base Station System (BSS) – Serving GPRS Support Node (SGSN) interface; Gb interface Layer 1".

[45] 3GPP TS 48.016: "Base Station System (BSS) – Serving GPRS Support Node (SGSN) interface; Network service".

[46] 3GPP TS 48.018: "Base Station System (BSS) – Serving GPRS Support Node (SGSN); BSS GPRS Protocol (BSSGP)".

[47] 3GPP TS 48.031: "Serving Mobile Location Centre – Serving Mobile Location Centre (SMLC – SMLC); SMLCPP specification".

[48] 3GPP TS 29.016: "Serving GPRS Support Node (SGSN) – Visitor Location Register (VLR); Gs interface network service specification".

[49] 3GPP TS 29.018: "Serving GPRS Support Node (SGSN) – Visitor Location Register (VLR); Gs interface Layer 3 specification".

[50] 3GPP TS 49.031: "Network Location Services (LCS); Base Station System Application Part LCS extension (BSSAP-LE)".

[51] 3GPP TS 29.060: "GPRS Tunnelling Protocol (GTP) across the Gn and Gp Interface".

[52] ITU-T Recommendation H.248: "Gateway Control Protocol".

[53] ITU-T Recommendation E.164: "The International public telecommunication numbering plan".

[54] ITU-T Recommendation H.323: "Packet-based multimedia communications systems".

[55] 3GPP TS 44.071: "Mobile radio interface layer 3 Location Services (LCS) specification".

[56] 3GPP TS 23.271: "Functional stage 2 description of LCS".

[57] ITU-T Recommendation I.363-2 :"B-ISDN ATM Adaptation Layer (AAL) type 2 specification".

[58] ITU-T Recommendation H.245: "Control protocol for multimedia communication".

Microsoft - Exhibit 1012
Microsoft v. Lemko- IPR2023-00531
Page 152 of 203

[59] IETF RFC 768: "User Datagram Protocol".

[60] IETF RFC 1889: "RTP: A Transport Protocol for Real-Time Applications".

[61] IETF RFC 3261: "SIP: Session Initiation Protocol".

[62] OMA MLP TS: "Mobile Location Protocol", [http://www.openmobilealliance.org/].

[63] 3GPP TS 29.198: "Open Service Access (OSA) Application Programming Interface (API)".

[64] 3GPP TS 33.210: "3G Security; Network Domain Security; IP network layer security".

[65] 3GPP TS 23.236: "Intra Domain Connection of RAN Nodes to Multiple CN Nodes".

[66] 3GPP TS 25.453: "UTRAN Iupc interface PCAP signalling".

[67] 3GPP TS 23.234: "3GPP system to Wireless Local Area Network (WLAN) interworking".

[68] 3GPP TS 23.141: "Presence Service; Architecture and functional description".

[69] OMA RLP TS: "Roaming Location Protocol", [http://www.openmobilealliance.org/].

[70] 3GPP TS 23.246: "Multimedia Broadcast/Multicast Service (MBMS); Architecture and functional description".

[71] 3GPP TS 23.240: "3GPP Generic User Profile (GUP); Architecture (Stage 2)".

[72] 3GPP TS 33.222: "Generic Authentication Architecture (GAA); Access to network application functions using Hypertext Transfer Protocol over Transport Layer Security (HTTPS)".

3 Definitions and abbreviations

In addition to the abbreviations given in the remainder of this clause others are listed in TR 21.905 [1a].

The definitions of the entities of the mobile system are given in the next subclause.

3.1 Public Land Mobile Network (PLMN)

A Public Land Mobile Network (PLMN) is established and operated by an administration or Recognized Private Operating Agency (RPOA) for the specific purpose of providing land mobile telecommunications service services to the public. A PLMN may be regarded as an extension of networks (e.g. ISDN, corporate and public PDNs, etc); it is a collection of MSCs areas in CS domain and SGSN areas in PS domain within a common numbering plan (e.g. same National Destination Code) and a common routing plan. The MSCs are the functional interfaces between the fixed networks and a PLMN for call set-up in CS domain. The GGSN and the SGSN are the functional interfaces between the fixed networks and a PLMN for packet transmission in PS domain.

Functionally the PLMNs may be regarded as independent telecommunications entities even though different PLMNs may be interconnected through the ISDN/PSTN and PDNs for forwarding of calls or network information. A similar type of interconnection may exist for the interaction between the MSCs/SGSNs of one PLMN.

3.2 Core Network (CN) and Access Network (AN)

The PLMN infrastructure is logically divided into a Core Network (CN) and an Access Network (AN) infrastructures, as defined in TS 23.101 [11a] and TS 23.110 [11b]. The CN is logically divided into a CS domain, a PS domain and an IM subsystem, as defined in next subclause. The AN is called BSS for GSM and RNS for UMTS, as defined in clause "The Access Network".

Microsoft - Exhibit 1012
Microsoft v. Lemko- IPR2023-00531
Page 153 of 203

3.3 Circuit Switched (CS) and Packet Switched (PS) Domains

The CN is constituted of a Circuit Switched (CS) domain and a Packet Switched (PS) domain. These two domains differ by the way they support user traffic, as explained below.

These two domains are overlapping, i.e. they contain some common entities. A PLMN can implement only one domain or both domains.

3.3.1 CS Domain

The CS domain refers to the set of all the CN entities offering "CS type of connection" for user traffic as well as all the entities supporting the related signalling. A "CS type of connection" is a connection for which dedicated network resources are allocated at the connection establishment and released at the connection release.

The entities specific to the CS domain are: MSC, GMSC, VLR. All the other CN entities defined in clause "4 The basic entities of the mobile system" and not defined as PS domain specific entities (see following subclause) are common to the CS and to the PS domains.

3.3.2 PS Domain

The PS domain refers to the set of all the CN entities offering "PS type of connection" for user traffic as well as all the entities supporting the related signalling. A "PS type of connection" transports the user information using autonomous concatenation of bits called packets: each packet can be routed independently from the previous one.

The entities specific to the PS domain are the GPRS specific entities, i.e. SGSN and GGSN. All the other CN entities defined in clause "4 The basic entities of the mobile system" and not defined as CS domain specific entities (see previous subclause) are common to the CS and to the PS domains.

3.3a IP Multimedia subsystem (IMS)

The IM subsystem comprises all CN elements for provision of IP multimedia services comprising audio, video, text, chat, etc. and a combination of them delivered over the PS domain. The entities related to IMS are CSCF, MGCF, MRF, etc. as defined in the stage 2 of the IM subsystem TS 23.228 [34]. See TS 22.228 [27] for some service examples of IMS.

3.4 Location register

To enable communication to a mobile station the network must know where this mobile station is located. This information is stored in a function named location register.

The location register is handled by four different entities.

- The Home Location Register (HLR).

The Home Location Register (HLR) is the location register to which a mobile subscriber is assigned for record purposes such as subscriber information.

- The Visitor Location Register (VLR).

The Visitor Location Register (VLR) is the location register for Circuit Switched (CS) services, other than the HLR, used by an MSC to retrieve information for, e.g. handling of calls to or from a roaming mobile station currently located in its area.

- The Serving GPRS Support Node (SGSN).

The location register function in the SGSN stores subscription information and location information for Packet Switched (PS) services for each subscriber registered in the SGSN.

The SGSN is needed only in a PLMN which supports GPRS.

- The Gateway GPRS Support Node (GGSN).

Microsoft - Exhibit 1012
Microsoft v. Lemko- IPR2023-00531
Page 154 of 203

The location register function in the GGSN stores subscription information and routeing information (needed to tunnel packet data traffic destined for a GPRS MS to the SGSN where the MS is registered) for each subscriber for which the GGSN has at least one PDP context active.

The GGSN is needed only in a PLMN which supports GPRS.

3.5 Cell

The cell is an area of radio coverage identified by a Base station identification as defined in TS 23.003 [3].

3.6 Base Station Controller (BSC) area

The Base Station Controller (BSC) area is an area of radio coverage consisting of one or more cells controlled by one BSC. The boundaries of a BSC area and a location area are independent; a location area may span the boundary between BSC area and a BSC area may span the boundary between location areas.

3.7 Radio Network Controller (RNC) area

The Radio Network Controller (RNC) area is an area of radio coverage consisting of one or more cells controlled by one RNC. The boundaries of a RNC area and a location area are independent; a location area may span the boundary between RNC area and a RNC area may span the boundary between location areas.

3.8 Location Area (LA)

The Location Area (LA) is defined as an area in which a mobile station may move freely without updating the VLR. A location area may include one or several cells.

3.9 Routing Area (RA)

The Routing Area (RA) is defined as an area in which a mobile station, in certain operation modes, may move freely without updating the SGSN. A routing area may include one or several cells. A RA is always contained within a location area.

3.10 MSC area

The MSC area is the part of the network covered by an MSC. An MSC area may consist of one or several location areas. An MSC area may also consist of one or several BSC areas.

3.11 VLR area

The VLR area is the part of the network controlled by a VLR. A VLR area may consist of one or several MSC areas.

3.12 SGSN area

The SGSN area is the part of the network served by an SGSN. An SGSN area may consist of one or several routing areas. An SGSN area may also consist of one or several BSC areas. There need not be a one to one relationship between SGSN area and MSC/VLR area.

3.13 Zones for Regional Subscription

A PLMN operator may define a number of regional subscription areas, each of which is a subset of the service area for an unrestricted mobile subscriber. A regional subscription area may be contained within the service area of a single

Microsoft - Exhibit 1012
Microsoft v. Lemko- IPR2023-00531
Page 155 of 203

PLMN, or may lie within the service areas of two or more PLMNs. Each regional subscription area consists of one or more zones; each zone is contained within the service area of a PLMN.

The definition of a mobile subscriber's regional subscription area is stored within the HLR per National Destination Code(s) (NDC) of a PLMN and is transferred to the VLRs and/or SGSNs of that PLMN. The VLR and/or SGSN evaluates this information to extract the restricted or accessible MSC and/or SGSN areas and location areas to which the mobile subscriber is allowed to roam. The VLR and/or SGSN informs the HLR if an entire MSC and/or SGSN area is restricted.

Zones for Regional Subscription and their handling are defined in TS 23.003 [3], TS 23.008 [5] and TS 29.002 [26].

3.14 Service area

The service area is defined as an area in which a mobile subscriber can be reached by another (mobile or fixed) subscriber without the subscriber's knowledge of the actual location of the mobile station within the area. A service area may consist of several PLMNs. One service area may consist of one country, be a part of a country or include several countries. The location registration system associated with each service area must thus contain a list of all mobile stations located within that service area.

3.15 Group call area

The group call area is a predefined area composed of one or a number of cells to which a particular Voice Group Call Service (VGCS) or Voice Broadcast Service (VBS) call is distributed. The composition of a group call area is predefined in the network. The group call area may include cells of more than one MSC area and cells of more than one PLMN.

3.16 Pool-area

A pool area is an area where Intra Domain Connection of RAN Nodes to Multiple CN Nodes is applied. Within a pool-area an MS may roam without need to change the serving Core Network (CN) node. A pool-area is served by one or more CN nodes in parallel.

4 The basic entities of the mobile system

To provide the mobile service as it is defined, it is necessary to introduce some specific functions. These functional entities can be implemented in different equipments or gathered. In any case, exchanges of data occur between these entities.

4.1 The Core Network (CN) entities

4.1.1 Entities common to the PS and CS domains

4.1.1.1 The Home Subscriber Server (HSS)

The HSS is the master database for a given user. It is the entity containing the subscription-related information to support the network entities actually handling calls/sessions.

A Home Network may contain one or several HSSs: it depends on the number of mobile subscribers, on the capacity of the equipment and on the organisation of the network.

As an example, the HSS provides support to the call control servers in order to complete the routing/roaming procedures by solving authentication, authorisation, naming/addressing resolution, location dependencies, etc.

The HSS is responsible for holding the following user related information:

- User Identification, Numbering and addressing information;

Microsoft - Exhibit 1012
Microsoft v. Lemko- IPR2023-00531
Page 156 of 203

- User Security information: Network access control information for authentication and authorization;
- User Location information at inter-system level: the HSS supports the user registration, and stores inter-system location information, etc.;
- User profile information.

The HSS also generates User Security information for mutual authentication, communication integrity check and ciphering.

Based on this information, the HSS also is responsible to support the call control and session management entities of the different Domains and Subsystems (defined in section 3.3 and 3.3a) of the operator as shown in figure 0-a.

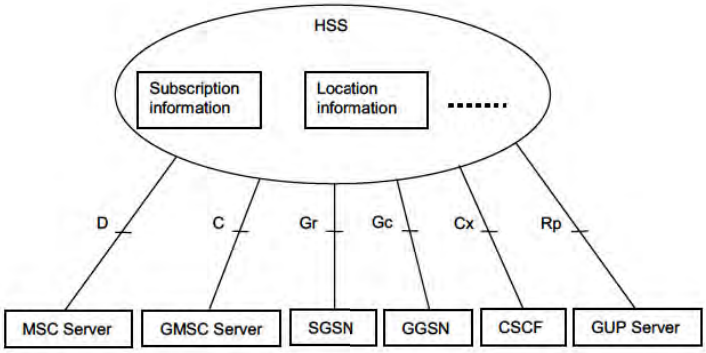

Figure 0-a: Example of a Generic HSS structure and basic interfaces

The HSS may integrate heterogeneous information, and enable enhanced features in the core network to be offered to the application & services domain, at the same time hiding the heterogeneity.

The HSS consists of the following functionalities:

- IP multimedia functionality to provide support to control functions of the IM subsystem such as the CSCF. It is needed to enable subscriber usage of the IM CN subsystem services. This IP multimedia functionality is independent of the access network used to access the IM CN subsystem.
- The subset of the HLR/AUC functionality required by the PS Domain.
- The subset of the HLR/AUC functionality required by the CS Domain, if it is desired to enable subscriber access to the CS Domain or to support roaming to legacy GSM/UMTS CS Domain networks.

The HSS is considered as GUP Data Repository for IM CN Subsystem user related data. The RAF (Repository Access Function) provides the Rp reference point as described in TS 23.240 [71].

The organisation of the subscriber data is outlined in TS 23.008 [5]. It also indicates which numbers, addresses and identifiers specified in TS 23.003 [3] are stored in HSS.

4.1.1.1.1 The Home Location Register (HLR)

The HLR is shown in the Reference Architecture up to and including Rel-4.

The HLR can be considered a subset of the HSS that holds the following functionality:

- The functionality required to provide support to PS Domain entities such as the SGSN and GGSN, through the Gr and Gc interfaces and the 3GPP AAA Server for the I-WLAN through the D'/Gr' interface. It is needed to enable subscriber access to the PS Domain services.

Microsoft - Exhibit 1012
Microsoft v. Lemko- IPR2023-00531
Page 157 of 203

- The functionality required to provide support to CS Domain entities such as the MSC/MSC server and GMSC/GMSC server, through the C and D interfaces. It is needed to enable subscriber access to the CS Domain services and to support roaming to legacy GSM/UMTS CS Domain networks.

4.1.1.1.2 The Authentication Centre (AuC)

The AuC is shown in the Reference Architecture up to and including Rel-4.

The AuC can be considered a subset of the HSS that holds the following functionality for the CS Domain and PS Domain:

- The AuC is associated with an HLR and stores an identity key for each mobile subscriber registered with the associated HLR. This key is used to generate security data for each mobile subscriber:
  - data which are used for mutual authentication of the International Mobile Subscriber Identity (IMSI) and the network;
  - a key used to check the integrity of the communication over the radio path between the mobile station and the network;
  - a key used to cipher communication over the radio path between the mobile station and the network.
- The AuC communicates only with its associated HLR over a non-standardised interface denoted the H-interface. The HLR requests the data needed for authentication and ciphering from the AuC via the H-interface, stores them and delivers them to the VLR and SGSN which need them to perform the security functions for a mobile station.

4.1.1.1.3 HSS logical functions

This section provides a high level and not exhaustive description of HSS functionality.

Microsoft - Exhibit 1012
Microsoft v. Lemko- IPR2023-00531
Page 158 of 203

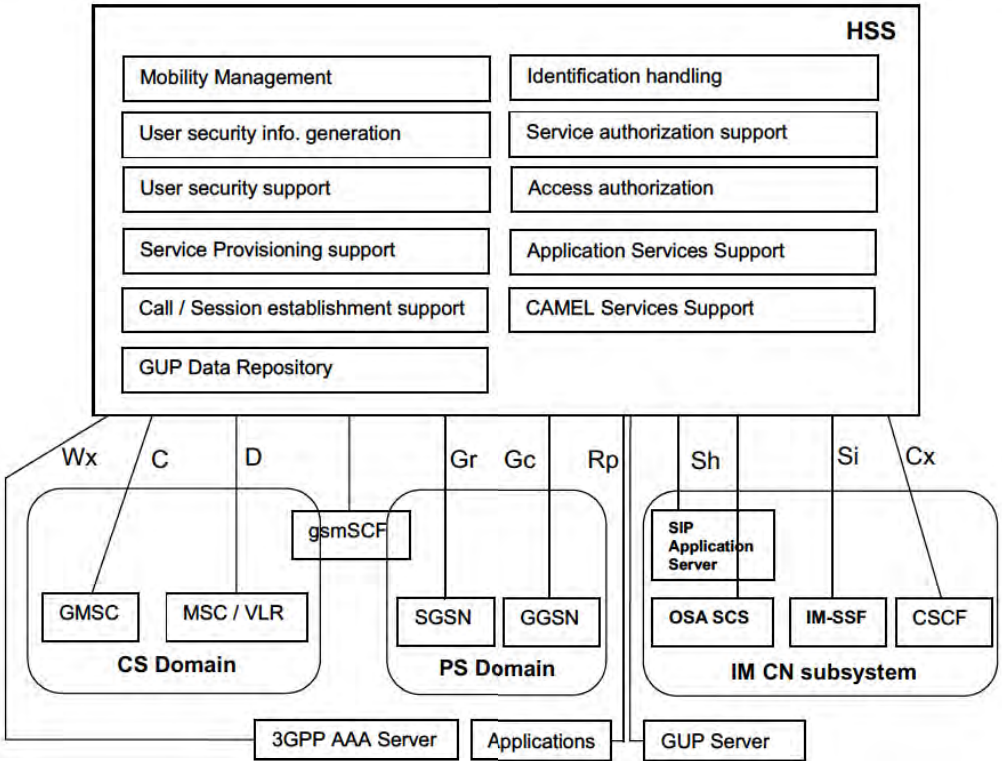

Figure 0.b – HSS logical functions

- Mobility Management

  This function supports the user mobility through CS Domain, PS Domain and IM CN subsystem.

- Call and/or session establishment support

  The HSS supports the call and/or session establishment procedures in CS Domain, PS Domain and IM CN subsystem. For terminating traffic, it provides information on which call and/or session control entity currently hosts the user.

- User security information generation

- The HSS generates user authentication, integrity and ciphering data for the CS and PS Domains and for the IM CN subsystem. User security support

  The HSS supports the authentication procedures to access CS Domain, PS Domain and IM CN subsystem services by storing the generated data for authentication, integrity and ciphering and by providing these data to the appropriate entity in the CN (i.e. MSC/VLR, SGSN, 3GPP AAA Server or CSCF).

- User identification handling

  The HSS provides the appropriate relations among all the identifiers uniquely determining the user in the system: CS Domain, PS Domain and IM CN subsystem (e.g. IMSI and MSISDNs for CS Domain; IMSI, MSISDNs and IP addresses for PS Domain, private identity and public identities for IM CN subsystem).

- Access authorisation

  The HSS authorises the user for mobile access when requested by the MSC/VLR, SGSN, 3GPP AAA Server or CSCF, by checking that the user is allowed to roam to that visited network.

Microsoft - Exhibit 1012
Microsoft v. Lemko- IPR2023-00531
Page 159 of 203

- Service authorisation support

  The HSS provides basic authorisation for MT call/session establishment and service invocation. Besides, the HSS updates the appropriate serving entities (i.e., MSC/VLR, SGSN, 3GPP AAA Server, CSCF) with the relevant information related to the services to be provided to the user.

- Service Provisioning Support

- The HSS provides access to the service profile data for use within the CS Domain, PS Domain and/or IM CN subsystem.Application Services and CAMEL Services Support

  The HSS communicates with the SIP Application Server and the OSA-SCS to support Application Services in the IM CN subsystem. It communicates with the IM-SSF to support the CAMEL Services related to the IM CN subsystem. It communicates with the gsmSCF to support CAMEL Services in the CS Domain and PS Domain.

- GUP Data Repository

  The HSS supports the storage of IM CN Subsystem user related data, and provides access to these data through the Rp reference point.

4.1.1.2 The Visitor Location Register (VLR)

A mobile station roaming in an MSC area or within a pool-area is controlled by a Visitor Location Register. When a Mobile Station (MS) enters a new location area it starts a registration procedure. An MSC in charge of that area notices this registration and transfers to a Visitor Location Register the identity of the location area where the MS is situated. If this MS is not yet registered in the VLR, the VLR and the HLR exchange information to allow the proper handling of calls involving the MS.

A VLR may be in charge of one or several MSC areas.

The VLR contains also the information needed to handle the calls set-up or received by the MSs registered in its data base (for some supplementary services the VLR may have to obtain additional information from the HLR). The following elements are included:

- the International Mobile Subscriber Identity (IMSI);
- the Mobile Station International ISDN number (MSISDN);
- the Mobile Station Roaming Number (MSRN), see TS 23.003 [3] for allocation principles;
- the Temporary Mobile Station Identity (TMSI), if applicable;
- the Local Mobile Station Identity (LMSI), if used;
- the location area where the mobile station has been registered;
- the identity of the SGSN where the MS has been registered. Only applicable to PLMNs supporting GPRS and which have a Gs interface between MSC/VLR and SGSN;
- the last known location and the initial location of the MS.

The VLR also contains supplementary service parameters attached to the mobile subscriber and received from the HLR. The organisation of the subscriber data is outlined in TS 23.008 [5].

4.1.1.3 (void)

4.1.1.4 The Equipment Identity Register (EIR)

The Equipment Identity Register (EIR) in the GSM system is the logical entity which is responsible for storing in the network the International Mobile Equipment Identities (IMEIs), used in the GSM system.

The equipment is classified as "white listed", "grey listed", "black listed" or it may be unknown as specified in TS 22.016 [2] and TS 29.002 [26].

This functional entity contains one or several databases which store(s) the IMEIs used in the GSM system.

Microsoft - Exhibit 1012
Microsoft v. Lemko- IPR2023-00531
Page 160 of 203

The mobile equipment may be classified as "white listed", "grey listed" and "black listed" and therefore may be stored in three separate lists.

An IMEI may also be unknown to the EIR.

An EIR shall as a minimum contain a "white list" (Equipment classified as "white listed").

See also TS 22.016 [2] on IMEI.

4.1.1.5 SMS Gateway MSC (SMS-GMSC)

The SMS Gateway MSC (SMS-GMSC) acts as an interface between a Short Message Service Centre and the PLMN, to allow short messages to be delivered to mobile stations from the Service Centre (SC).

The choice of which MSCs can act as SMS Gateway MSCs is a network operator matter (e.g. all MSCs or some designated MSCs).

4.1.1.6 SMS Interworking MSC (SMS-IWMSC)

The SMS Interworking MSC acts as an interface between the PLMN and a Short Message Service Centre (SC) to allow short messages to be submitted from Mobile Stations to the SC.

The choice of which MSCs can act as SMS Interworking MSCs is a network operator matter (e.g. all MSCs or some designated MSCs).

4.1.1.7 Subscription Locator Function (SLF)

The SLF:

- Is queried by the I-CSCF during the Registration and Session Setup to get the name of the HSS containing the required subscriber specific data. Furthermore the SLF is also queried by the S-CSCF during the Registration.
- Is queried by the AS in conjunction with the Sh interface operation to get the name of the HSS containing the required subscriber specific data.
- Is queried by the 3GPP AAA server to get the name of the HSS containing the required subscriber specific data.
- Is accessed via the Dx interface by the CSCF, via the Dh interface by the AS, and via the Dw interface by the 3GPP AAA Server.

The SLF is not required in a single HSS environment. An example for a single HSS environment is a server farm architecture. Use of SLF is not required when AS are configured/managed to use pre-defined HSS.

4.1.2 Entities of the CS domain

4.1.2.1 The Mobile-services Switching Centre (MSC)

The Mobile-services Switching Centre (MSC) constitutes the interface between the radio system and the fixed networks. The MSC performs all necessary functions in order to handle the circuit switched services to and from the mobile stations.

In order to obtain radio coverage of a given geographical area, a number of BSS and/or RNSare normally required; i.e. each MSC would thus have to interface to one or more BSS(s) and/or RNS(s). In addition several MSCs may be required to cover a country.

When Intra Domain Connection of RAN Nodes to Multiple CN Nodes is applied, all the MSCs serving a pool-area share the responsibility to serve the MSs located in the pool-area. All these MSCs interface to all the BSS(s) and/or RNS(s) forming the pool-area.

The Mobile-services Switching Centre is an exchange, which performs all the switching and signalling functions for mobile stations located in a geographical area designated as the MSC area. When Intra Domain Connection of RAN Nodes to Multiple CN Nodes is applied, one or more MSCs serve a pool-area, but each individual MS is served by only one out of these MSCs, as described in TS 23.236 [65]. The main difference between a MSC and an exchange in a fixed

Microsoft - Exhibit 1012
Microsoft v. Lemko- IPR2023-00531
Page 161 of 203

network is that the MSC has to take into account the impact of the allocation of radio resources and the mobile nature of the subscribers and has to perform in addition, at least the following procedures:

- procedures required for the location registration (see TS 23.012 [7]);
- procedures required for handover (see TS 23.009 [6]).

NOTE: When this improves the readibility (e.g. when dealing with inter-releases handover), the term 2G-MSC can be used to refer to an MSC Release 98 or prior, and the term 3G-MSC can be used to refer to an MSC Release 99 or later.

When needed, the MSC can be implemented in two different entities: the MSC Server, handling only signalling, and the CS-MGW, handling user's data. A MSC Server and a CS-MGW make up the full functionality of a MSC.

4.1.2.1.1 MSC Server

The MSC Server mainly comprises the call control (CC) and mobility control parts of a MSC.

The MSC Server is responsible for the control of mobile originated and mobile terminated CC CS Domain calls. It terminates the user-network signalling and translates it into the relevant network – network signalling. The MSC Server also contains a VLR to hold the mobile subscriber's service data and CAMEL related data.

The MSC Server controls the parts of the call state that pertain to connection control for media channels in a CS-MGW.

4.1.2.1.2 Circuit Switched - Media Gateway Function (CS-MGW)

NOTE: In this document the term Media Gateway Function (MGW) is used when there is no need to differentiate between the CS domain entity and the IP Multimedia CN Subsystem entity. When refering specifically to the CS domain entity the term CS-MGW is used. When refering specifically to the IP Multimedia CN Subsystem entity, the term IMS-MGW is used.

This component is PSTN/PLMN transport termination point for a defined network and interfaces UTRAN with the core network over Iu.

A CS-MGW may terminate bearer channels from a switched circuit network and media streams from a packet network (e.g. RTP streams in an IP network). Over Iu, the CS-MGW may support media conversion, bearer control and payload processing (e.g. codec, echo canceller, conference bridge) for support of different Iu options for CS services (AAL2/ATM based as well as RTP/UDP/IP based).

The CS-MGW:

- Interacts with MGCF, MSC server and GMSC server for resource control.
- Owns and handles resources such as echo cancellers etc.
- May need to have codecs.

The CS-MGW will be provisioned with the necessary resources for supporting UMTS/GSM transport media. Further tailoring (i.e packages) of the H.248 [52] may be required to support additional codecs and framing protocols, etc.

The CS-MGW bearer control and payload processing capabilities will also need to support mobile specific functions such as SRNS relocation/handover and anchoring. It is expected that current H.248 [52] standard mechanisms can be applied to enable this.

4.1.2.2 The Gateway MSC (GMSC)

If a network delivering a call to the PLMN cannot interrogate the HLR, the call is routed to an MSC. This MSC will interrogate the appropriate HLR and then route the call to the MSC where the mobile station is located. The MSC which performs the routing function to the actual location of the MS is called the Gateway MSC (GMSC).

The acceptance of an interrogation to an HLR is the decision of the operator.

The choice of which MSCs can act as Gateway MSCs is for the operator to decide (i.e. all MSCs or some designated MSCs).

Microsoft - Exhibit 1012
Microsoft v. Lemko- IPR2023-00531
Page 162 of 203

If the call is a voice group/broadcast call, it is routed directly from the GMSC to the VBS/VGCS Anchor MSC, based on information (VBS/VGCS call reference) contained in the dialled number (see also TS 43.068 [41] and TS 43.069 [42]).

Editor's note: There is a need to consider possibilities that call incoming to the PLMN may be routed to entities other than the GMSC, e.g., for networks that do not deploy CS domain.

When needed, the GMSC can be implemented in two different entities: the GMSC Server, handling only signalling, as defined below, and the CS-MGW, defined above. A GMSC Server and a CS-MGW make up the full functionality of a GMSC.

4.1.2.2.1 Gateway MSC Server (GMSC Server)

The GMSC server mainly comprises the call control and mobility control parts of a GMSC.

4.1.2.3 The Interworking Function (IWF)

The Interworking Function (IWF) is a functional entity associated with the MSC. The IWF provides the functionality necessary to allow interworking between a PLMN and the fixed networks (ISDN, PSTN and PDNs). The functions of the IWF depend on the services and the type of fixed network. The IWF is required to convert the protocols used in the PLMN to those used in the appropriate fixed network. The IWF may have no functionality where the service implementation in the PLMN is directly compatible with that at the fixed network. The interworking functions are described in TS 29.007 [31].

4.1.3 Entities of the PS domain

The UMTS PS-domain (or GPRS) Support Nodes (GSN) are the Gateway GSN (GGSN) and the Serving GSN (SGSN). They constitute the interface between the radio system and the fixed networks for packet switched services. The GSN performs all necessary functions in order to handle the packet transmission to and from the mobile stations.

4.1.3.1 Serving GPRS Support Node (SGSN)

The location register function in the SGSN stores two types of subscriber data needed to handle originating and terminating packet data transfer:

- subscription information:
  - the IMSI;
  - one or more temporary identities;
  - zero or more PDP addresses.
- location information:
  - depending on the operating mode of the MS, the cell or the routeing area where the MS is registered;
  - the VLR number of the associated VLR (if the Gs interface is implemented);
  - the GGSN address of each GGSN for which an active PDP context exists.

The organisation of the subscriber data in the SGSN is defined in TS 23.008 [5] and TS 23.060 [9a].

The procedures for information transfer between the SGSN, the GGSN, the VLR and the HLR are defined in TS 23.016 [39] and TS 23.060 [9a].

NOTE: When this improves the readibility (e.g. when dealing with inter-releases handover), the term 2G-SGSN can be used to refer to an MSC Release 98 or prior, and the term 3G-SGSN can be used to refer to an MSC Release 99 or later.

Microsoft - Exhibit 1012
Microsoft v. Lemko- IPR2023-00531
Page 163 of 203

4.1.3.2 Gateway GPRS Support Node (GGSN)

The location register function in the GGSN stores subscriber data received from the HLR and the SGSN. There are two types of subscriber data needed to handle originating and terminating packet data transfer:

- subscription information:
  - the IMSI;
  - zero or more PDP addresses.
- location information:
  - the SGSN address for the SGSN where the MS is registered.

The organisation of the subscriber data in the GGSN is defined in TS 23.008 [5] and TS 23.060 [9a].

The procedures for information transfer between the GGSN, the SGSN and the HLR are defined in TS 23.016 [39] and TS 23.060 [9a].

4.1.3.3 Border Gateway (BG)

The Border Gateway (BG) is a gateway between a PLMN supporting GPRS and an external inter-PLMN backbone network used to interconnect with other PLMNs also supporting GPRS. The role of the BG is to provide the appropriate level of security to protect the PLMN and its subscribers.

The BG is only needed in PLMNs supporting GPRS.

4.2 The Access Network (AN) entities

Two different types of access network are used by the CN: the Base Station System (BSS) and the Radio Network System (RNS). The MSC (resp. SGSN) can connect to one of these Access Network type or to both of them.

The access technologies offered by the BSS are described in the 45-series of 3GPP specifications. The access technologies offered by the RNS (FDD, TDD) are described in the 25-series of 3GPP specifications.

4.2.1 The Base Station System (BSS)

The Base Station System (BSS) is the system of base station equipments (transceivers, controllers, etc...) which is viewed by the MSC through a single A and/or Iu-CS interface as being the entity responsible for communicating with Mobile Stations in a certain area. Similarly, in PLMNs supporting GPRS, the BSS is viewed by the SGSN through a single Gb or Iu-PS interface. When Intra Domain Connection of RAN Nodes to Multiple CN Nodes is applied, a BSS may connect to several MSCs by several A and/or Iu-CS interfaces, and a BSS may connect to several SGSNs by several Gb and/or Iu-PS interfaces. The functionality for the A interface is described in TS 48.002 [14] and for the Gb interface in TS 23.060 [9a]. The functionality for the Iu-CS interface is described in TS 25.410 [14a] and for the Iu-PS interface in TS 23.060 [9a].

The radio equipment of a BSS may support one or more cells. A BSS may consist of one or more base stations. Where an Abis-interface is implemented, the BSS consists of one Base Station Controller (BSC) and one or more Base Transceiver Station (BTS). The split of functions between BSS and CN for a Iu interface is desribed in the 25-series of UMTS Technical Specifications.

The split of functions between BSS and CN for a A/Gb interface is described in the 48-series of GSM Technical Specifications. The split of functions between BSS and CN for a Iu interface is desribed in the 25-series of UMTS Technical Specifications.

NOTE: The mobile station shall operate using only the following modes:

a **A / G_b mode**, e.g. for pre-Release 4 terminals, or for Release 4 terminals when connected to a BSS with no Iu interface towards the Core Network.

b **Iu mode** (i.e. Iu-CS and Iu-PS), e.g. for Release 4 terminals when connected to a BSS with Iu interfaces towards the Core Network.

Microsoft - Exhibit 1012
Microsoft v. Lemko- IPR2023-00531
Page 164 of 203

No other modes (e.g. A/Iu-PS or Iu-CS/Gb) shall be allowed.

See also TS 43.051 [36].

4.2.1.1 Base Station Controller (BSC)

A Base Station Controller (BSC) is a network component in the PLMN with the functions for control of one or more BTS.

4.2.1.2 Base Transceiver Station (BTS)

A Base Transceiver Station (BTS) is a network component which serves one cell.

4.2.2 The Radio Network System (RNS)

The Radio Network System (RNS) is the system of base station equipments (transceivers, controllers, etc...) which is viewed by the MSC through a single Iu-interface as being the entity responsible for communicating with Mobile Stations in a certain area. Similarly, in PLMNs supporting GPRS, the RNS is viewed by the SGSN through a single Iu-PS interface. When Intra Domain Connection of RAN Nodes to Multiple CN Nodes is applied, an RNS may connect to several MSCs by several Iu-CS interfaces, and an RNS may connect to several SGSNs by several Iu-PS interfaces. The functionality for the Iu-CS interface is described in TS 25.410 [14a] and for the Iu-PS interface in TS 23.060 [9a]. The radio equipment of a RNS may support one or more cells. A RNS may consist of one or more base stations. The RNS consists of one Radio Network Controller (RNC) and one or more Node B.

The split of functions between RNS and CN is described in the 25-series of UMTS Technical Specifications.

4.2.2.1 Radio Network Controller (RNC)

A Radio Network Controller (RNC) is a network component in the PLMN with the functions for control of one or more Node B.

4.2.2.2 Node B

A Node B is a logical network component which serves one or more cells.

4.3 The Mobile Station (MS)

The mobile station consists of the physical equipment used by a PLMN subscriber; it comprises the Mobile Equipment (ME) and the Subscriber Identity Module (SIM), called UMTS Subscriber Identity Module (USIM) for Release 99 and following. The ME comprises the Mobile Termination (MT) which, depending on the application and services, may support various combinations of Terminal Adapter (TA) and Terminal Equipment (TE) functional groups. These functional groups are described in TS 44.002 [12].

Editor's note: an input is expected to introduce the UE (User Equipment) definition and clarify the difference between MS and UE.

4a The specific entities of the mobile system

The entities presented in this clause are dedicated to the provisionning of a given (set of) service(s). The fact that they are implemented or not in a given PLMN should have limited impact on all the other entities of the PLMN.

All the specific entities defined so far are located in the Core Network.

4a.1 The Group Call Register (GCR) entity

The Group Call Register (GCR) is a register holding information about VGCS or VBS calls, the voice group or broadcast call attributes, respectively.

Microsoft - Exhibit 1012
Microsoft v. Lemko- IPR2023-00531
Page 165 of 203

Voice group or broadcast call attributes are defined for a specific voice group or broadcast call reference and include the data required to configure the conference bridge for a VGCS or VBS call and other call related attributes.

The Group Call Register (GCR) shall hold for a related MSC area for each group ID and cell from which Voice Group Call Service (VGCS) or Voice Broadcast Service (VBS) calls can be established by mobile stations the voice group call reference or voice broadcast call reference to be used for a VGCS or VBS call to be established and an indication whether the originating MSC is the MSC responsible for that call.

If the originating MSC is not responsible for that call, the GCR shall hold the routing information identifying the MSC responsible for that call.

A GCR may be in charge of one or several MSC. Each MSC involved in a voice group or broadcast call requests its proper voice group or broadcast call attributes from its related GCR by use of the voice group or broadcast call reference.

The contents of each list related to requests of the MSC responsible for a voice group or broadcast call is as follows:

- a list of cells inside the MSC area of the requesting MSC into which the call is to be sent (part of the group call area);
- a list of other MSCs into which the call is to be sent;
- a list of identities of dispatchers to which a dedicated link is to be established;
- a list of identities of dispatchers which are allowed to initiate the voice group or broadcast call;
- a list of identities of dispatchers which are allowed to terminate the voice group or broadcast call;
- the length of time over which no activity is detected before the voice group call is automatically terminated;
- the default priority level related to the voice group or broadcast call if the eMLPP supplementary service applies;
- a flag indicating if acknowledgements are required for this voice group or broadcast call.

The contents of each list related to requests of an MSC not responsible for a voice group or broadcast call is as follows:

- a list of cells inside the MSC area of the requesting MSC into which the call is to be sent (part of the group call area).

More information is provided in TS 43.068 [41] and TS 43.069 [42].

4a.2 (void)

4a.3 The Location Services (LCS) entities

This section describes the Location Services entities found in the Core Network and Radio Access Network that support positioning methods for the UE/MS.

For further details on LCS in UMTS and GSM from system and core network point view, see TS 23.271 [56].

For further details on LCS in UTRAN, see TS 25.305 [10b].

For further details on LCS in GERAN, see TS 43.059 [10d].

4a.3.1 Location Services (LCS) entities in RAN

The RAN (UTRAN and GERAN) supports one or more UE/MS positioning methods to calculate the geographical position of the UE/MS and responds to the UE/MS location request received from the CN. The RAN may broadcast LCS assistance data to Ues/MSs under its coverage. In case this assistance data is ciphered, the ciphering key is provided by the CN to the UE/MS.

To support UE positioning methods, the RAN is made of several entities like:

Microsoft - Exhibit 1012
Microsoft v. Lemko- IPR2023-00531
Page 166 of 203

BSC/SRNC: the BSC for GERAN and SRNC for UTRAN receive authenticated location requests from the CN:

- In UTRAN, the SRNC co-ordinates the positioning requests taking into account their priority and it selects the positioning method to fulfil the requested accuracy. It interfaces, when necessary, with the CRNC which mainly manages resources allocated to UE positioning operations and requests UE Positioning related measurements from its associated Node Bs and LMUs.
- In GERAN, the BSC passes the location request to the SMLC.

SMLC:

- The Serving Mobile Location Center (SMLC) function can be part of the RNC or be a SAS (Stand-Alone SMLC) for UTRAN. The SMLC function can be part of the BSC or be in a separate SMLC server for GERAN.
- In UTRAN, the SMLC function provides assistance data to the RNC and acts as a location calculation server if the location estimates are not to be calculated in the RNC.
- In GERAN, the SMLC function co-ordinates the positioning request, schedules resources required to perform positioning of a mobile, and calculates the final location estimate and accuracy. The SMLC may control a number of LMUs.

LMU: The Location Measurement Unit (LMU) entity makes measurements for one or more positioning methods.

Node B: Node B is a network element of UTRAN that may provide measurement results for position estimation and makes measurements of radio signals.

CBC: The Cell Broadcast Center, in GERAN, the SMLC function may interface a CBC in order to broadcast assistance data using existing cell broadcast capabilities.

For detail on Location services, entities and interfaces provided by UTRAN, see TS 25.305 [10b].

For detail on Location services, entities and interfaces provided by GERAN, see TS 43.059 [10d].

4a.3.2 Gateway Mobile Location Center (GMLC)

The Gateway Mobile Location Center (GMLC) is the first node an external Location Application accesses in the GSM PLMN. The GMLC performs registration authorization and requests routing information from the HLR. There may be more than one GMLC in a PLMN.

4a.3.3 Location Measurement Unit (LMU)

An LMU makes radio measurements to support one or more positioning methods.

Two types of LMU are defined:

- Type A LMU: accessed over the normal GSM air interface;
- Type B LMU: accessed over the base station to controller interface (Abis in GSM and Iub in UMTS).

A type A LMU is accessed exclusively over the GSM air interface (Um interface): there is no wired connection to any other network element.

In GSM, a type A LMU has a serving BTS and BSC that provide signaling access to a controlling SMLC. With an NSS based SMLC, a type A LMU also has a serving MSC and VLR and a subscription profile in an HLR. A type A LMU always has a unique IMSI and supports all radio resource and mobility management functions of the GSM air interface that are necessary to support signaling using an SDCCH to the SMLC. A type A LMU supports those connection management functions necessary to support LCS signaling transactions with the SMLC and may support certain call control functions of to support signaling to an SMLC using a circuit switched data connection.

In UMTS, a type A LMU has signaling access to the SRNC. Type A LMU is not supported in UMTS release 1999.

In GSM, a Type B LMU is accessed over the Abis interface from a BSC. The LMU may be either a standalone network element addressed using some pseudo-cell ID or connected to or integrated in a BTS. Signaling to a Type B LMU is by

Microsoft - Exhibit 1012
Microsoft v. Lemko- IPR2023-00531
Page 167 of 203

means of messages routed through the controlling BSC for a BSS based SMLC or messages routed through a controlling BSC and MSC for an NSS based SMLC.

In UMTS, a Type B LMU is accessed over the Iub interface from an RNC. The LMU may be either a standalone network element addressed using some pseudo-cell ID or connected to or integrated in a Node B.

4a.4 CAMEL entities

The entities of this subclause support the CAMEL feature (Customised Applications for Mobile network Enhanced Logic). This feature provides the mechanisms to support services consistently independently of the serving network, as described in TS 22.078 [2c]. The following definitions are extracted from TS 23.078 [10c], which completely specifies CAMEL stage 2.

4a.4.1 GSM Service Control Function (gsmSCF)

A functional entity that contains the CAMEL service logic to implement Operator Specific Service. It interfaces with the gsmSSF, the gsmSRF and the HLR.

4a.4.2 GSM Service Switching Function (gsmSSF)

A functional entity that interfaces the MSC/GMSC to the gsmSCF. The concept of the gsmSSF is derived from the IN SSF, but uses different triggering mechanisms because of the nature of the mobile network.

4a.4.3 GSM Specialised Resource Function (gsmSRF)

A functional entity which provides various specialized resources. It interfaces with the gsmSCF and with the MSC. This entity is defined in ITU-T Q.1214 [11] with variations defined in TS 23.078 [10c].

4a.4.4 GPRS Service Switching Function (gprsSSF)

A functional entity that interfaces the SGSN to the gsmSCF. The concept of the gprsSSF is derived from the IN SSF, but uses different triggering mechanisms because of the nature of the mobile network.

4a.5 CBS-specific entities

The cell broadcast service (CBS) is a Teleservice which enables an Information Provider to submit short messages for broadcasting to a specified area within the PLMN. TS 23.041 [8] contains the technical realization of the service.

4a.5.1 Cell Broadcast Center (CBC)

The CBC shall be responsible for the management of CBS messages and for determining the CBS delivery parameters of the RNS. The CBC may be connected to several BSCs/RNCs. In UMTS the CBC is regarded to be integrated as a node into the core network.

NOTE: Whether it should be possible that an RNC is connected to at least two CBCs at the same time (the "normal" one as in GSM and a second one for LCS) is for further study and depents on the solution taken for LCS.

4a.6 Number Portability Specific entities

Two different solutions are defined to support Number Portability. The first one is an IN based solution and is described in the next subclause. The second one is a "Signalling Relay" based solution described in next but one subclause.

For details on MNP see TS 23.066 [40].

Microsoft - Exhibit 1012
Microsoft v. Lemko- IPR2023-00531
Page 168 of 203

4a.6.1 IN-based solution: Number Portability Database (NPDB)

The Number Portability Database (NPDB) is the central element of the IN based solution for Mobile Number Portability (MNP). MNP is the ability for a mobile subscriber to change the GSM subscription network within a portability cluster (e.g. a country) whilst retaining his/her original MSISDN or MSISDNs.

The NPDB stores the table of correspondence between MSISDNs and Subscription networks. Upon request of the (gateway or visited) MSC, the NPDB retrieves from the MSISDN the Routing Number pointing out the Subscription network.

4a.6.2 Signalling Relay-based solution: Mobile Number Portability/Signalling Relay function (MNP-SRF)

The MNP-Signalling Relay Function (MNP-SRF) is the central element of the Signalling Relay based solution for Mobile Number Portability.

The MNP-SRF obtains the routing information from a NP database to identify the subscription network associated with a particular national MSISDN. Upon request from gateway MSC, the MNP-SRF may perform one of the following actions:

1. the MNP-SRF will reply back to the GMSC with the necessary routing information to route the call;
2. the message is relayed to the HLR;
3. the message is relayed to MNP-SRF in the subscription network.

For non-call related signalling (e.g. delivery of SMS), only cases 2 and 3 are applicable.

4a.7 IP Multimedia (IM) Core Network (CN) Subsystem entities

4a.7.1 Call Session Control Function (CSCF)

The CSCF can act as Proxy CSCF (P-CSCF), Serving CSCF (S-CSCF) or Interrogating CSCF (I-CSCF). The P-CSCF is the first contact point for the UE within the IM subsystem (IMS); the S-CSCF actually handles the session states in the network; the I-CSCF is mainly the contact point within an operator's network for all IMS connections destined to a subscriber of that network operator, or a roaming subscriber currently located within that network operator's service area. Further definitions of the P-, S- and I-CSCF are provided in TS 23.228 [34].

4a.7.2 Media Gateway Control Function (MGCF)

The MGCF:

- Controls the parts of the call state that pertain to connection control for media channels in an IMS-MGW.
- Communicates with CSCF, BGCF, and PSTN entities.
- Determines the next hop depending on the routing number for incoming calls from legacy networks.
- Performs protocol conversion between ISUP/TCAP and the IM subsystem call control protocols.
- Out of band information received in MGCF may be forwarded to CSCF/IMS-MGW.

4a.7.3 IP Multimedia Subsystem - Media Gateway Function (IMS-MGW)

Note: In this document the term Media Gateway Function (MGW) is used when there is no need to differentiate between the CS domain entity and the IP Multimedia CN Subsystem entity. When refering specifically to the CS domain entity the term CS-MGW is used. When refering specifically to the IP Multimedia CN Subsystem entity, the term IMS-MGW is used.

Microsoft - Exhibit 1012
Microsoft v. Lemko- IPR2023-00531
Page 169 of 203

A IMS-MGW may terminate bearer channels from a switched circuit network and media streams from a packet network (e.g., RTP streams in an IP network). The IMS-MGW may support media conversion, bearer control and payload processing (e.g. codec, echo canceller, conference bridge), it:

- Interacts with the MGCF for resource control.
- Owns and handles resources such as echo cancellers etc.
- May need to have codecs.

The IMS-MGW will be provisioned with the necessary resources for supporting UMTS/GSM transport media. Further tailoring (i.e. packages) of the H.248 [52] may be required to support additional codecs and framing protocols, etc.

4a.7.4 Multimedia Resource Function Controller (MRFC)

The MRFC:

- Controls the media stream resources in the MRFP.
- Interprets information coming from an AS and S-CSCF (e.g session identifier) and control MRFP accordingly.
- Generates CDRs .

4a.7.4a Multimedia Resource Function Processor (MRFP)

The MRFP:

- Controls bearers on the Mb reference point.
- Provides resources to be controlled by the MRFC.
- Mixes incoming media streams (e.g. for multiple parties).
- Sources media streams (for multimedia announcements).
- Processes media streams (e.g. audio transcoding, media analysis).
- Floor Control (i.e. manage access rights to shared resources in a conferencing environment).

4a.7.5 Void

4a.7.6 Breakout Gateway Control Function (BGCF)

The Breakout Gateway control function (BGCF) selects the network in which PSTN breakout is to occur and - within the network where the breakout is to occur - selects the MGCF.

4a.7.7 Application Server (AS)

An Application Server (AS) i.e., SIP Application Server, OSA Application Server, or CAMEL IM-SSF, offers value added IM services and resides either in the user's home network or in a third party location. The third party could be a network or simply a stand-alone AS.

NOTE: The OSA Application Server does not directly interact with the IMS network entities but through the OSA Service Capability Servers (OSA SCS-s). Further information on OSA is provided in TS 22.127 [4].

The AS (SIP Application Server and/or the OSA Service Capability Server and/or IM-SSF) can communicate with the HSS. The Sh and Si interfaces are used for this purpose.

The Serving-CSCF to AS interface is used to provide services residing in an AS. Two cases were identified:

- Serving-CSCF to an AS in Home Network.

Microsoft - Exhibit 1012
Microsoft v. Lemko- IPR2023-00531
Page 170 of 203

- Serving-CSCF to an AS in a trusted External Network (e.g., Third Party or Visited). The S-CSCF does not provide authentication and security functionality for secure direct third party access to the IM Subsystem. The OSA framework provides a standardized way for third party access to the IM Subsystem.

The Interrogating-CSCF to AS interface is used to forward SIP requests destined to a Public Service Identity hosted by the AS directly to that AS.

An Application Server may influence and impact the SIP session on behalf of the services supported by the operator's network. An AS may host and execute services.

4a.7.8 Interconnection Border Control Function (IBCF)

An IBCF provides application specific functions at the SIP/SDP protocol layer in order to perform interconnection between two operator domains. It enables communication between IPv6 and IPv4 SIP applications. network topology hiding, controlling transport plane functions, screening of SIP signalling information, selecting the appropriate signalling interconnect and generation of charging data records. Details are described in TS 23.228 [34].

4a.7.9 Transition Gateway (TrGW)

A TrGW is located within the media path and controlled by an IBCF. It provides functions like network address/port translation and IPv4/IPv6 protocol translation. Details are described in TS 23.228 [34].

4a.8 Signalling Gateway Function (SGW)

The SGW performs the signalling conversion (both ways) at transport level between the SS7 based transport of signaling used in pre-Rel 4 networks, and the IP based transport of signalling possibly used in post-R99 networks (i.e. between Sigtran SCTP/IP and SS7 MTP). The SGW does not interpret the application layer (e.g. MAP, CAP, BICC, ISUP) messages but may have to interpret the underlying SCCP or SCTP layer to ensure proper routing of the signaling.

4a.9 Global Text Telephony Specific entities

Interworking between cellular text modem (CTM) and text telephony standards (e.g. V.18) used in external networks can beis supported by three methods:

- Routing calls through a CTM Special resource function (CTM-SRF) in the core network. The CTM-SRF is linked in to the call path via CAMEL procedures. Depending on operator configuration the CTM-SRF may also be linked in to the call path for Emergency calls.

- A CTM / Text telephone converting function included along the speech call path selected by the network after an indication from the terminal that CTM is required.

- A CTM / Text telephone converting function included in all speech call paths.

Further information of the support for text telephony is found in TS 23.226 [37].

For further details of CTM, see TS 26.226 [38].

4a.10 Security Gateway (SEG)

The UMTS network domain shall be logically and physically divided into security domains in order to protect IP based control plane signalling. These security domains typically coincide with operator borders.

The interface between different security domains is protected by Security Gateways (SEGs). The SEGs are responsible for enforcing the security policy of a IP security domain towards other SEGs in the destination IP security domain. All NDS/IP traffic shall pass through a SEG before entering or leaving a security domain. For further details of SEG, see TS 33.210 [64].

Microsoft - Exhibit 1012
Microsoft v. Lemko- IPR2023-00531
Page 171 of 203

4a.11 Application Function (AF)

The Application Function (AF) is an element offering applications that require the control of IP bearer resources or the control of flow based bearer charging. The AF is capable of communicating with the PDF to transfer dynamic QoS-related service information and/or with the CRF to transfer dynamic charging-related service information.

One example of an AF is the P-CSCF of the IM CN subsystem.

4a.12 Policy Decision Function (PDF)

The Policy Decision Function (PDF) acts as a policy decision point for service based local policy control of IP bearer resources. The PDF makes decisions about IP berarer resource allocation requests.

4a.13 3GPP/WLAN Interworking entities

4a.13.1 WLAN UE

A WLAN UE is the User Equipment using a UICC card utilized by a 3GPP subscriber to access the WLAN network for 3GPP interworking purpose.

4a.13.2 3GPP AAA Proxy

The 3GPP AAA Proxy represents a AAA proxying and filtering function and resides in the visited 3GPP network. It is is envolved in access and service authentication and authorization procedures of a WLAN UE.

4a.13.3 3GPP AAA Server

The 3GPP AAA server resides in the 3GPP network and is responsible for access and service authentication and authorization of a WLAN UE.

4a.13.4 WLAN Access Gateway (WAG)

The WLAN access gateway is a gateway between WLAN and 3GPP network. In the roaming case it resides in the visited 3GPP network, otherwise in the home 3GPP network. It provides filtering, policing and charging functionality for the traffic between WLAN UE and 3GPP network.

4a.13.5 Packet Data Gateway (PDG)

The Packet Data Gateway provides access to PS based services for a WLAN UE. It resides either in the home (for access to home services) or in the visited 3GPP network (for access to local services).

4a.14 Multimedia Broadcast Multicast Service (MBMS) specific entities

4a.14.1 General

The Multimedia Broadcast Multicast Service (MBMS) is a point-to-multipoint service in which data is transmitted from a single source entity to multiple recipients. TS 23.246 [70] contains the technical realization of the service.

4a.14.2 Broadcast-Multicast Service Centre (BM-SC)

The Broadcast-Multicast Service Centre provides functions for MBMS user service provisioning and delivery. It may serve as an entry point for content provider MBMS transmissions, used to authorise and initiate MBMS Bearer Services within the PLMN and can be used to schedule and deliver MBMS transmissions.

Microsoft - Exhibit 1012
Microsoft v. Lemko- IPR2023-00531
Page 172 of 203

4a.15 Charging Rules Function (CRF)

The Charging Rules Function (CRF) acts as a controller for Flow Based Charging functionality. The CRF selects and provides the applicable charging rules to the GGSN.

4a.16 GUP Server

The GUP Server is a functional entity providing a single point of access to the Generic User Profile data of a particular subscriber. The architecture does not specify or limit the physical location of the GUP Server enabling flexibility in the implementations. For further details of the GUP Server, see TS 23.240 [71].

5 Configuration of a Public Land Mobile Network

5.1 Basic configuration

The basic configuration of a Public Land Mobile Network (PLMN) supporting GPRS and the interconnection to the PSTN/ISDN and PDN is presented in figure 1 and figure 1a. This configuration presents signalling and user traffic interfaces which can be found in a PLMN. Implementations may be different: some particular functions may be gathered in the same equipment and then some interfaces may become internal interfaces.

In the basic configuration presented in figure 1, all the functions are considered implemented in different equipments. Therefore, all the interfaces within PLMN are external. Interfaces A and Abis are defined in the 48-series ofTechnical Specifications. Interfaces Iu, Iur and Iub are defined in the 25.4xx-series of Technical Specifications. Interfaces B, C, D, E, F and G need the support of the Mobile Application Part of the signalling system No. 7 to exchange the data necessary to provide the mobile service. No protocols for the H-interface and for the I-interface are standardized. All the GPRS-specific interfaces (G- series) are defined in the 23-series and 24-series of Technical Specifications. Interfaces Mc, Nb, and Nc are defined in TS 23.205 [43] and in the 29-series of Technical Specifications.

From this configuration, all the possible PLMN organisations can be deduced. In the case when some functions are contained in the same equipment, the relevant interfaces become internal to that equipment.

Microsoft - Exhibit 1012
Microsoft v. Lemko- IPR2023-00531
Page 173 of 203

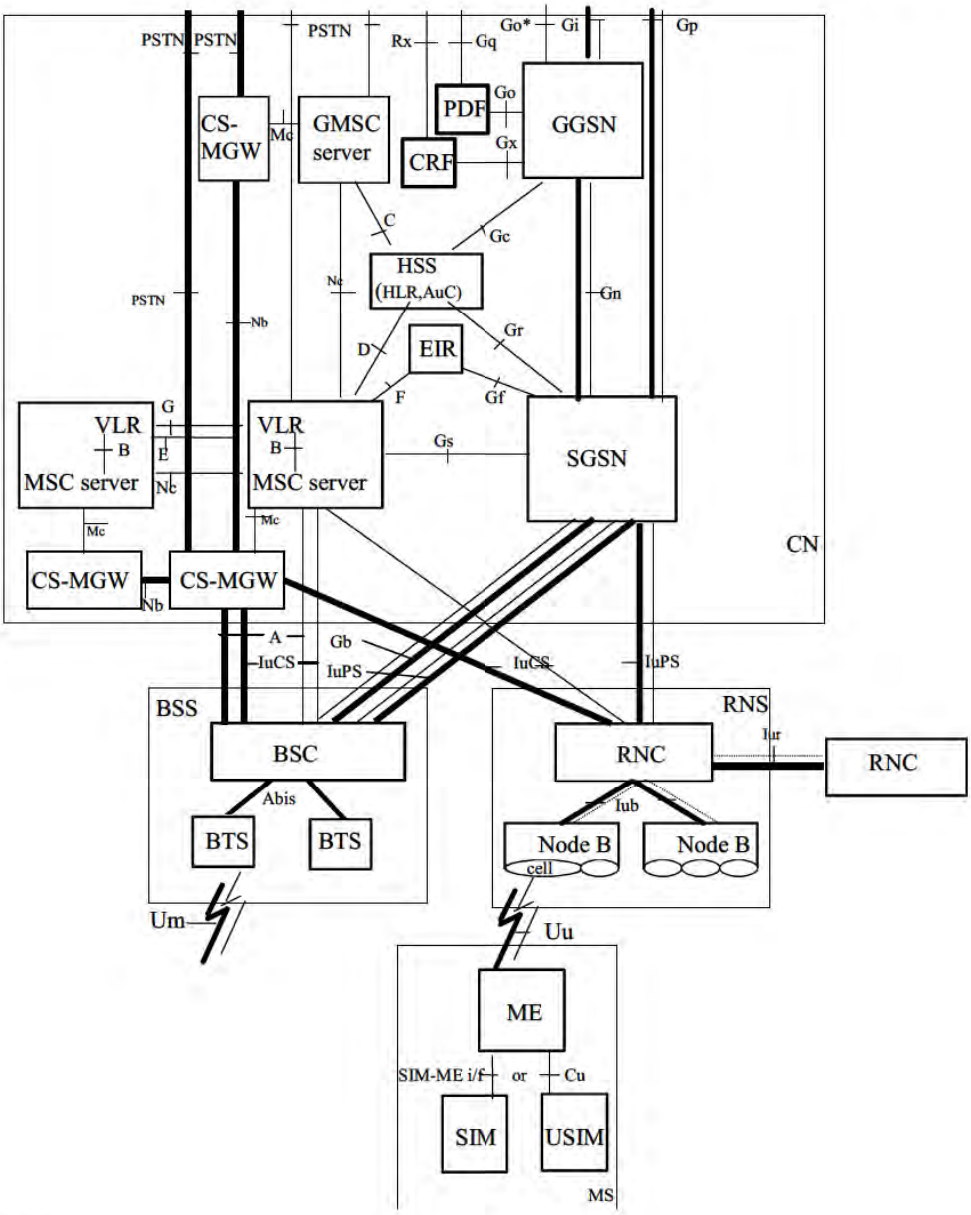

Legend:
Bold lines: interfaces supporting user traffic;
Dashed lines: interfaces supporting signalling.

NOTE 1: The figure shows direct interconnections between the entities. The actual links may be provided by an underlying network (e.g. SS7 or IP): this needs further studies.

NOTE 2: When the MSC and the SGSN are integrated in a single physical entity, this entity is called UMTS MSC (UMSC).

NOTE 3: A (G)MSC server and associated CS-MGW can be implemented as a single node: the (G)MSC.

NOTE 4: The Gn interface (between two SGSNs) is also part of the reference architecture, but is not shown for layout purposes only.

NOTE 5: The Go interface marked with a '*' has been included to this figure for backwards compatibility only, in order to support connecting to Release-5 IM CN Subsystem configurations

Figure 1: Basic Configuration of a PLMN supporting CS and PS services and interfaces

Microsoft - Exhibit 1012
Microsoft v. Lemko- IPR2023-00531
Page 174 of 203

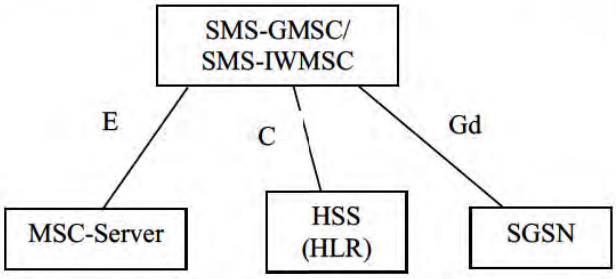

Figure 1a: Configuration for Short Message Service

5.2 Configuration of LCS entities

5.2.1 Configuration of LCS entities for GERAN

The configuration of LCS entities for GERAN is presented in figure 2. In the figure, all the functions are considered implemented in different logical nodes. If two logical nodes are implemented in the same physical equipment, the relevant interfaces may become internal to that equipment.

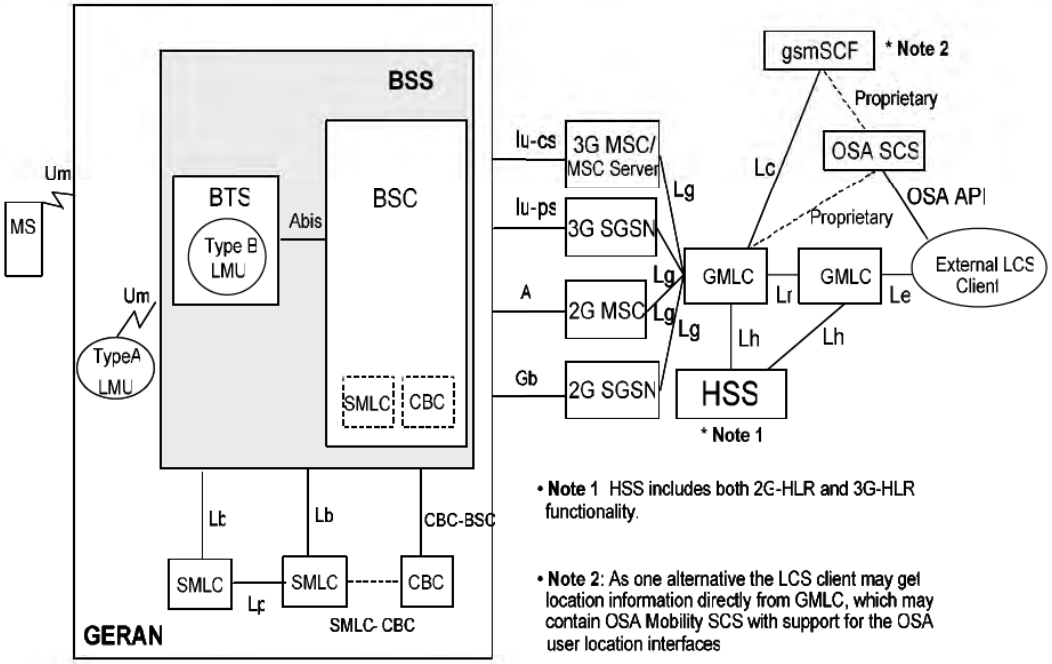

Figure 2: Configuration of LCS entities for a GERAN PLMN

Microsoft - Exhibit 1012
Microsoft v. Lemko- IPR2023-00531
Page 175 of 203

5.2.2 Configuration of LCS entities for UTRAN

The basic configuration of UTRAN LCS is presented in figure 3. The SMLC funtionality is integrated in SRNC or, in case a Stand-Alone SMLC entity (SAS) is present, split between SRNC and SMLC.

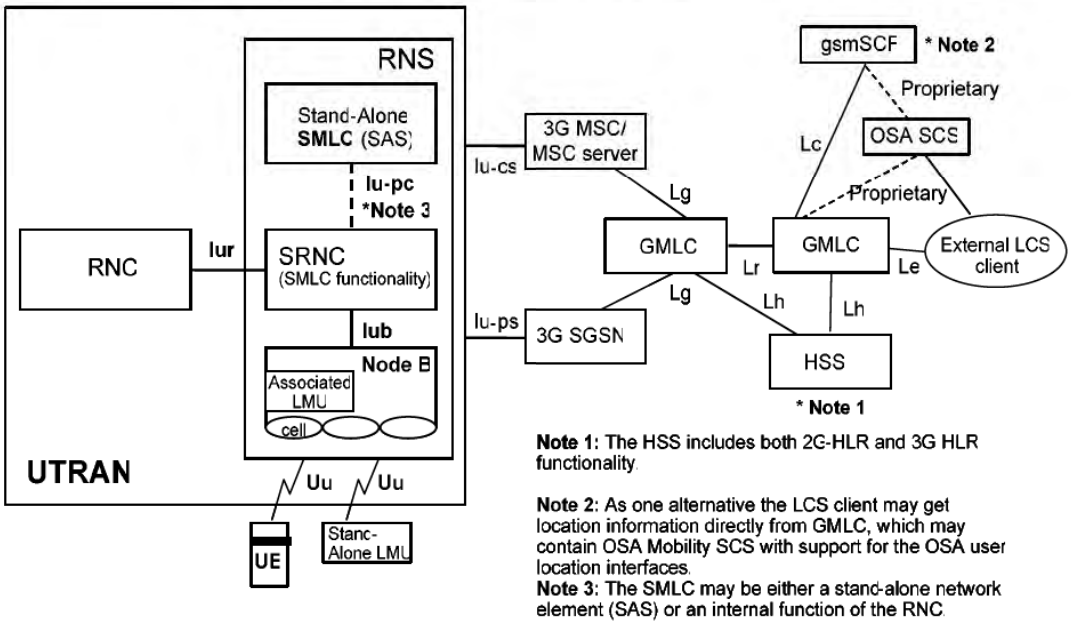

Figure 3: Configuration of LCS entities for a UTRAN PLMN

5.3 Configuration of CAMEL entities

The following figure shows the interconnection of the CAMEL-specific entities with the rest of the network. Only the interfaces specificly involved in CAMEL provisionning are shown, i.e. all the GMSC, MSC, SGSN and HLR interfaces depicted in figure 1 are still supported by these entities even if not shown.

NOTE: Most CAMEL-specific interfaces have no particular name. They are designated by the name of the two entities they link together, e.g. "the gsmSSF-gsmSCF interface".

Microsoft - Exhibit 1012
Microsoft v. Lemko- IPR2023-00531
Page 176 of 203

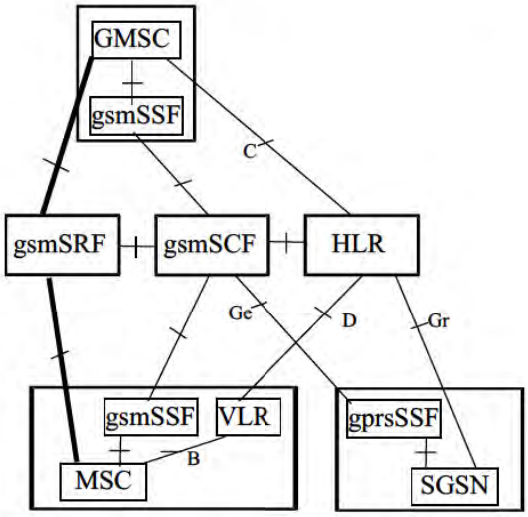

Figure 4: configuration of CAMEL entities

The bold lines are used for interfaces supporting user data only, the dashed lines are used for interfaces supporting signalling only.

5.4 Configuration of CBS entities

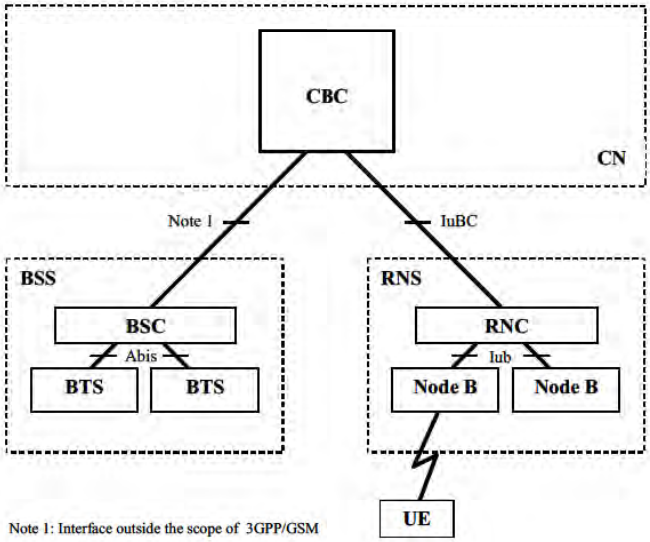

Figure 5: Configuration of a PLMN supporting Cell Broadcast Service entities

5.5 Configuration of IM CN Subsystem entities

The configuration of IM CN Subsystem entities is presented in figure 6. In the figure, all the functions are considered implemented in different logical nodes. If two logical nodes are implemented in the same physical equipment, the relevant interfaces may become internal to that equipment.

Microsoft - Exhibit 1012
Microsoft v. Lemko- IPR2023-00531
Page 177 of 203

Only the interfaces specifically linked to the IM subsystem are shown, i.e. all the SGSN, GGSN and HSS interfaces depicted in figure 1 are still supported by these entities even if not shown.

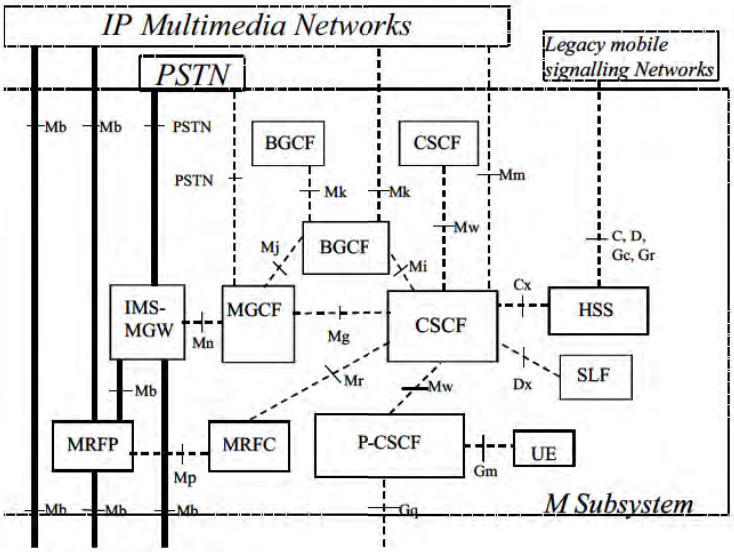

Legend:
Bold lines: interfaces supporting user traffic;
Dashed lines: interfaces supporting only signalling.

Figure 6: Configuration of IM Subsystem entities

The figure below depicts an overall view of the functional architecture for services.

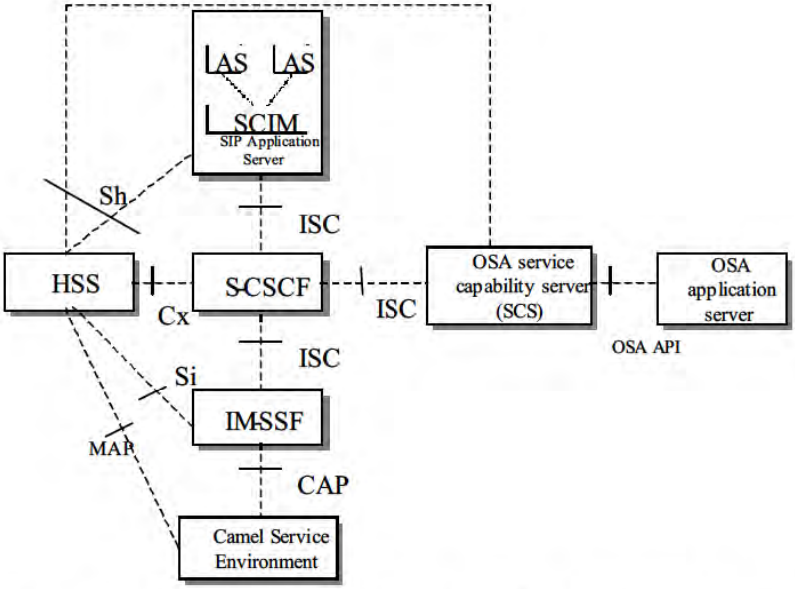

Figure 6a: Functional architecture for the provision of service in the IMS

The purpose of the IM SSF is to host the CAMEL network features (i.e. trigger detection points, CAMEL Service Switching Finite State Machine, etc) and to interwork with CAP.

Microsoft - Exhibit 1012
Microsoft v. Lemko- IPR2023-00531
Page 178 of 203

The IM SSF and the CAP interface support legacy services only.

The application server may contain "service capability interaction manager" (SCIM) functionality and other application servers. The SCIM functionality is an application which performs the role of interaction management. The internal components are represented by the "dotted boxes" inside the SIP application server. The internal structure of the application server is outside the standards. The Sh interface shall have sufficient functionality to enable this scenario.

The figure below depicts an overall view of the functional architecture for enabling the management of the user's service related information via the Ut interface.

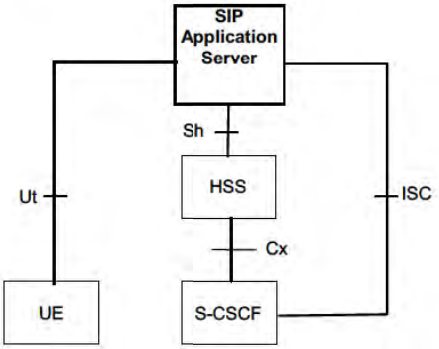

Figure 6b: Functional architecture for the management of the user's service related information

The figure below depicts an overall view of the functional architecture for routing SIP requests between I-CSCF and Application Server.

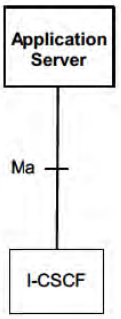

Figure 6c: Functional architecture for the routing of SIP requests between I-CSCF and AS

5.6 Configuration of Signalling Gateway Function

The Signalling gateway function is used to interconnect different signalling networks i.e. SCTP/IP based signalling networks and SS7 signalling networks. The application layer (e.g. ISUP, BICC, MAP or CAP) is not affected. The signalling gateway function may be implemented as a stand alone entity or inside another entity.

Microsoft - Exhibit 1012
Microsoft v. Lemko- IPR2023-00531
Page 179 of 203

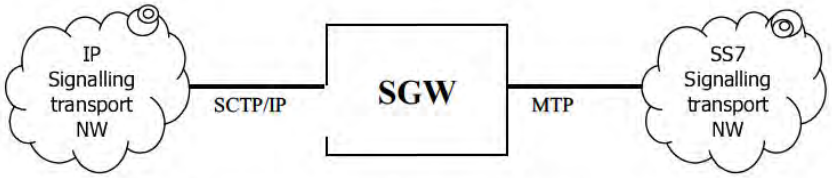

Figure 7: Configuration of a signalling gateway function

NOTE: SS7 application transport and SCTP/IP adaption protocols are not shown.

5.7 Configuration of 3GPP/WLAN Interworking

The configuration of the 3GPP/WLAN interworking function is presented in figure 8. The figure shows all network entities and reference point for the roaming scenario when a WLAN UE accesses PS based services in the home network. PS based services in the visited network are accessed via a Packet Data Gateway in the visited 3GPP network. Reference point Ww between WLAN UE and WLAN is outside the scope of 3GPP and only shown for completeness.

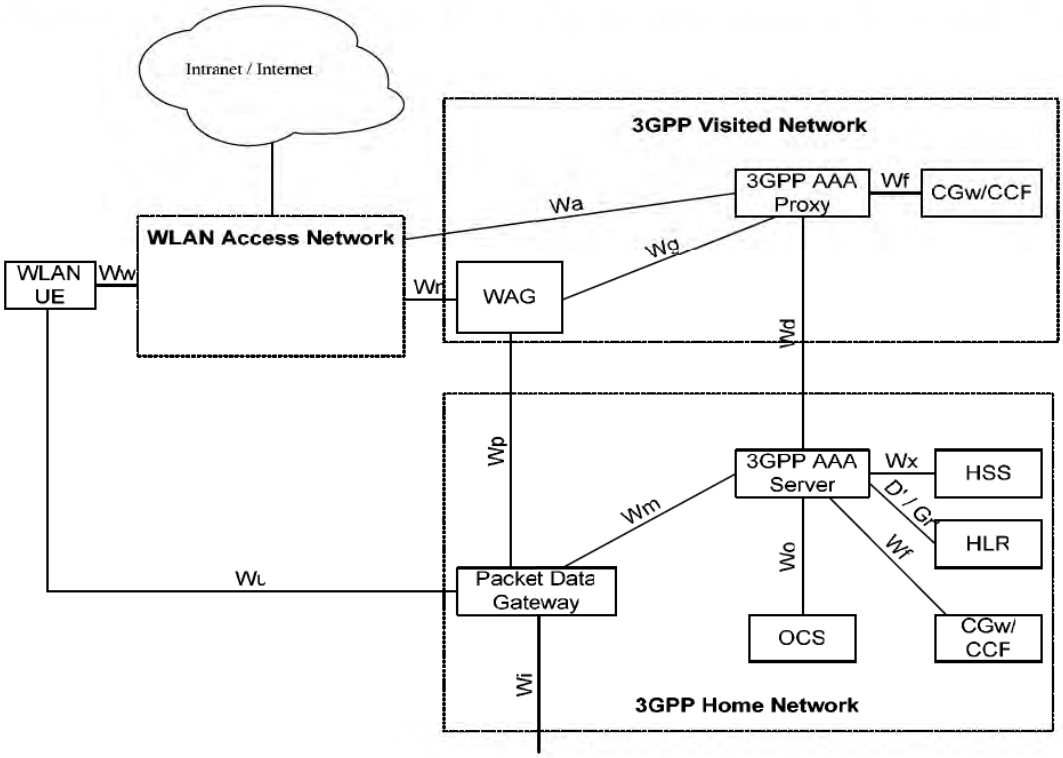

Figure 8: Configuration of a 3GPP/WLAN interworking function

5.8 Configuration of Presence service

The reference architecture model, the reference points and the functional entities to support the Presence Service are described in TS 23.141 [68].

Microsoft - Exhibit 1012
Microsoft v. Lemko- IPR2023-00531
Page 180 of 203

5.9 Configuration of MBMS entities

The configuration of the MBMS entities are represented in figure 9.

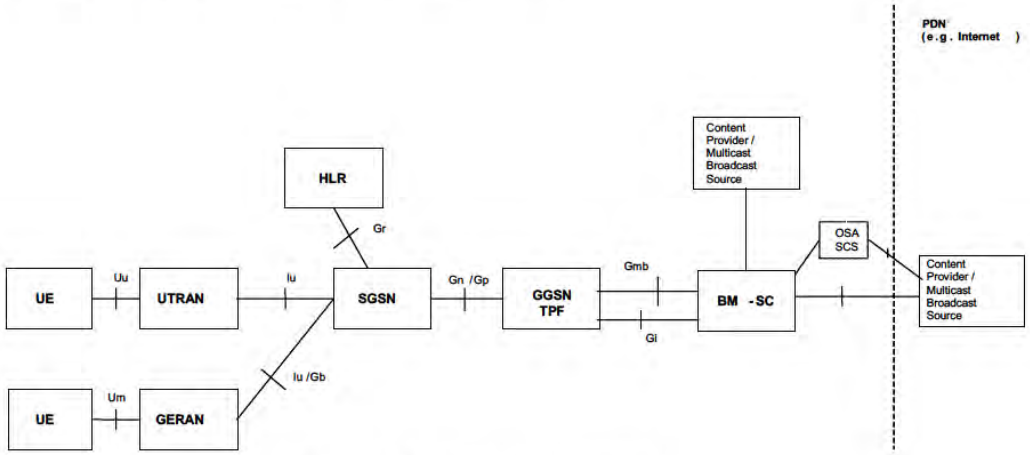

Figure 9: Configuration of MBMS entities

6 PLMN basic interfaces and reference points

The implementation of the mobile service with international roaming implies the exchange of data between the equipment involved in the service. The same No.7 signalling network should be used to transfer these data and the call-related signalling information.

Editor's note: either the difference between interface and reference point should be cleary provided, or only one of the terms should be used.

6.1 Interfaces between Mobile Station and the Fixed Infrastructure

6.1.1 Interface between Mobile Station and Base Station System (Um-interface)

The interface between the MS and the BSS is specified in the 44- and 45-series of Technical Specifications.

6.1.2 Interface between User Equipment and Radio Netwok System (Uu-interface)

The interface between the UE and the RNS is specified in the 24- and 25-series of Technical Specifications.

Microsoft - Exhibit 1012
Microsoft v. Lemko- IPR2023-00531
Page 181 of 203

6.2 Interface between the Core Network and the Access Network

6.2.1 Interfaces between the CS domain and the Access Network

6.2.1.1 Interface between the MSC and Base Station System (A-interface)

The interface between the MSC and its BSS is specified in the 48-series of Technical Specifications.

The BSS-MSC interface is used to carry information concerning:

- BSS management;
- call handling;
- mobility management.

6.2.1.2 Interface between the MSC and Base Station System (Iu_CS interface)

The interface between the MSC and its BSS is specified in the 25.41x-series of Technical Specifications.

The BSS-MSC interface is used to carry information concerning:

- BSS management;
- call handling;
- mobility management;

6.2.1.3 Interface between the MSC and RNS (Iu_CS interface)

The interface between the MSC and its RNS is specified in the 25.41x-series of Technical Specifications.

The RNS-MSC interface is used to carry information concerning:

- RNS management;
- call handling;
- mobility management.

6.2.2 Interfaces between the PS domain and the Access Network

6.2.2.1 Interface between SGSN and BSS (Gb-interface)

The BSS-SGSN interface is used to carry information concerning:

- packet data transmission;
- mobility management.

The Gb interface is defined in TS 48.014 [44], TS 48.016 [45] and TS 48.018 [46].

6.2.2.2 Interface between SGSN and BSS (Iu_PS-interface)

The BSS-SGSN interface is used to carry information concerning:

- packet data transmission;
- mobility management.

Microsoft - Exhibit 1012
Microsoft v. Lemko- IPR2023-00531
Page 182 of 203

The Iu_PS interface is defined in the 25.41x-series of 3GPP Technical Specifications.

6.2.2.3 Interface between SGSN and RNS (Iu_PS-interface)

The RNS-SGSN interface is used to carry information concerning:

- packet data transmission;
- mobility management.

The Iu_PS interface is defined in the 25.41x-series of Technical Specifications.

6.3 Interfaces internal to the Access Network

6.3.1 Interface between BSC and BTS (Abis-interface)

When the BSS consists of a Base Station Controller (BSC) and one or more Base Transceiver Stations (BTS), this interface is used between the BSC and BTS to support the services offered to the GSM users and subscribers.

The interface also allows control of the radio equipment and radio frequency allocation in the BTS.

The interface is specified in the 48.5x-series of Technical Specifications.

6.3.2 Interface between RNC and Node B (Iub-interface)

When the RNS consists of a Radio Network Controller (RNC) and one or more Node B, this interface is used between the RNC and Node B to support the services offered to the UMTS users and subscribers.

The interface also allows control of the radio equipment and radio frequency allocation in the Node B.

The interface is specified in the 28.5x-series of Technical Specifications.

6.3.3 Interface between two RNCs (Iur-interface)

This interface is defined in the 25.42x series of Technical Specifications.

6.4 Interfaces internal to the Core Network

6.4.1 Interfaces internal to the CS domain

6.4.1.1 Interface between the MSC server and its associated VLR (B-interface)

The VLR is the location and management database for the mobile subscribers roaming in the area controlled by the associated MSC server(s). Whenever the MSC server needs data related to a given mobile station currently located in its area, it interrogates the VLR. When a mobile station initiates a location updating procedure with an MSC server, the MSC server informs its VLR which stores the relevant information. This procedure occurs whenever an MS roams to another location area. Also, when a subscriber activates a specific supplementary service or modifies some data attached to a service, the MSC server informs (via the VLR) the HLR which stores these modifications and updates the VLR if required.

This interface is internal to the MSC server /VLR; signalling on it is not standardised.

6.4.1.2 Interface between the HLR and the MSC server (C-interface)

The Gateway MSC server must interrogate the HLR of the required subscriber to obtain routing information for a call or a short message directed to that subscriber.

Microsoft - Exhibit 1012
Microsoft v. Lemko- IPR2023-00531
Page 183 of 203

Signalling on this interface uses the Mobile Application Part (MAP), which in turn uses the services of Transaction Capabilities (see TS 29.002 [26]).

For CAMEL purposes, this interface is used as described in TS 23.078 [10c]. It is used e.g. at terminating calls to exchange routeing information, subscriber status, location information, subscription information, etc.

6.4.1.3 Interface between the HLR and the VLR (D-interface)

This interface is used to exchange the data related to the location of the mobile station and to the management of the subscriber. The main service provided to the mobile subscriber is the capability to set up or to receive calls within the whole service area. To support this, the location registers have to exchange data. The VLR informs the HLR of the location of a mobile station managed by the latter and provides it (either at location updating or at call set-up) with the roaming number of that station. The HLR sends to the VLR all the data needed to support the service to the mobile subscriber. The HLR then instructs the previous VLR to cancel the location registration of this subscriber. Exchanges of data may occur when the mobile subscriber requires a particular service, when he wants to change some data attached to his subscription or when some parameters of the subscription are modified by administrative means.

Signalling on this interface uses the Mobile Application Part (MAP), which in turn uses the services of Transaction Capabilities (see TS 29.002 [26]).

For CAMEL purposes, this interface is used to send the CAMEL related subscriber data to the visited PLMN and for provision of MSRN. The interface is also used for the other purposes described in TS 23.078 [10c], e.g. to retrieve subscriber status and location information of the mobile subscriber or to indicate suppression of announcement for a CAMEL service.

6.4.1.4 Interface between MSC servers (E-interface)

When a mobile station moves from one MSC area to another during a call, a handover procedure has to be performed in order to continue the communication. For that purpose the MSC servers have to exchange data to initiate and then to realise the operation.

After the handover operation has been completed, the MSC servers will exchange information to transfer A- or Iu- interface signalling as defined in TS 23.009 [6].

When a short message is to be transferred between a Mobile Station and Short Message Service Centre (SC), in either direction, this interface is used to transfer the message between the MSC server serving the Mobile Station and the MSC server which acts as the interface to the SC.

Signalling on this interface uses the Mobile Application Part (MAP), which in turn uses the services of Transaction Capabilities (see TS 29.002 [26]).

6.4.1.5 Interface between MSC server and EIR (F-interface)

This interface is used between MSC server and EIR to exchange data, in order that the EIR can verify the status of the IMEI retrieved from the Mobile Station.

Signalling on this interface uses the Mobile Application Part (MAP), which in turn uses the services of Transaction Capabilities (see TS 29.002 [26]).

6.4.1.6 Interface between VLRs (G-interface)

When a mobile subscriber moves from a VLR area to another Location Registration procedure will happen. This procedure may include the retrieval of the IMSI and authentication parameters from the old VLR.

Signalling on this interface uses the Mobile Application Part (MAP), which in turn uses the services of Transaction Capabilities (see TS 29.002 [26]).

6.4.1.7 Reference point (G)MSC server – CS-MGW (Mc Reference Point)

The Mc reference point describes the interfaces between the MSC Server and CS-MGW, and between the GMSC Server and CS-MGW. It has the following properties:

Microsoft - Exhibit 1012
Microsoft v. Lemko- IPR2023-00531
Page 184 of 203

- full compliance with the H.248 [52] standard, baseline work of which is currently carried out in ITU-T Study Group 16, in conjunction with IETF MEGACO WG.
- flexible connection handling which allows support of different call models and different media processing purposes not restricted to H.323 [54] usage.
- open architecture where extensions/Packages definition work on the interface may be carried out.
- dynamic sharing of MGW physical node resources. A physical MGW can be partitioned into logically separate virtual MGWs/domains consisting of a set of statically allocated Terminations.
- dynamic sharing of transmission resources between the domains as the MGW controls bearers and manage resources according to the H.248 [52] protocols.

The functionality across the Mc reference point will need to support mobile specific functions such as SRNS relocation/handover and anchoring. It is expected that current H.248/IETF Megaco [52] standard mechanisms can be applied to enable this.

6.4.1.8 Reference Point MSC Server – GMSC Server (Nc Reference Point)

Over the Nc reference point, the Network-Network based call control is performed. Examples of this are ISUP or an evolvement of ISUP for bearer independent call control (BICC). Different options for signalling transport on Nc shall be possible including IP.

6.4.1.9 Reference Point CS-MGW – CS-MGW (Nb Reference Point)

Over the Nb reference point the bearer control and transport are performed. The transport may be RTP/UDP/IP [59], [60] or AAL2 (I.363-2) [57] for transport of user data. Different options for user data transport and bearer control shall be possible on Nb, for example: AAL2/Q.AAL2, STM/none, RTP/H.245 [58], IPBC.

6.4.2 Interfaces internal to the PS domain

6.4.2.1 Interface between SGSN and HLR (Gr-interface)

This interface is used to exchange the data related to the location of the mobile station and to the management of the subscriber. The main service provided to the mobile subscriber is the capability to transfer packet data within the whole service area. The SGSN informs the HLR of the location of a mobile station managed by the latter. The HLR sends to the SGSN all the data needed to support the service to the mobile subscriber. Exchanges of data may occur when the mobile subscriber requires a particular service, when he wants to change some data attached to his subscription or when some parameters of the subscription are modified by administrative means.

Signalling on this interface uses the Mobile Application Part (MAP), which in turn uses the services of Transaction Capabilities (TCAP) (see TS 29.002 [26]).

6.4.2.2 Interface between SGSN and GGSN (Gn- and Gp-interface)

These interfaces are used to support mobility between the SGSN and GGSN. The Gn interface is used when GGSN and SGSN are located inside one PLMN. The Gp-interface is used if GGSN and SGSN are located in different PLMNs. The Gn/Gp interface also includes a part which allows SGSNs to communicate subscriber and user data, when changing SGSN.

Signalling on this interface uses the User Datagram Protocol, UDP/IP [59]. The Gn/Gp interface is defined in TS 29.060 [51].

6.4.2.3 Signalling Path between GGSN and HLR (Gc-interface)

This optional signalling path may be used by the GGSN to retrieve information about the location and supported services for the mobile subscriber, to be able to activate a packet data network address.

There are two alternative ways to implement this signalling path:

Microsoft - Exhibit 1012
Microsoft v. Lemko- IPR2023-00531
Page 185 of 203

- if an SS7 interface is implemented in the GGSN, signalling between the GGSN and the HLR uses the Mobile Application Part (MAP), which in turn uses the services of Transaction Capabilities (TCAP) (see TS 29.002 [26]);
- if there is *no* SS7 interface in the GGSN, any GSN in the same PLMN and which has an SS7 interface installed can be used as a GTP to MAP protocol converter, thus forming a signalling path between the GGSN and the HLR.

6.4.2.4 Interface between SGSN and EIR (Gf-interface)

This interface is used between SGSN and EIR to exchange data, in order that the EIR can verify the status of the IMEI retrieved from the Mobile Station.

Signalling on this interface uses the Mobile Application Part (MAP), which in turn uses the services of Transaction Capabilities (TCAP) (see TS 29.002 [26]).

6.4.3 Interfaces used by CS and PS domains

6.4.3.1 Interface between MSC/VLR and SGSN (Gs-interface)

The SGSN may send location information to the MSC/VLR via the optional Gs interface. The SGSN may receive paging requests from the MSC/VLR via the Gs interface. The MSC/VLR may indicate to an SGSN, via the Gs interface, that an MS is engaged in a service handled by the MSC.

Signalling on this interface uses connectionless SCCP (without TCAP). SCCP Global Title (GT) is used for addressing. The Gs-interface is defined in TS 29.016 [48] and TS 29.018 [49].

6.4.3.2 Interface between HLR and AuC (H-Interface)

When an HLR receives a request for authentication and ciphering data for a Mobile Subscriber and it does not hold the requested data, the HLR requests the data from the AuC. The protocol used to transfer the data over this interface is not standardised.

6.4.3.3 Interface between SGSN and SMS-GMSC/SMS-IWMSC (Gd-Interface)

This interface is used to transfer short messages between SGSN and SMS-GMSC or SMS-IWMSC over GPRS. Signalling on this interface uses the Mobile Application Part (MAP) (see TS 29.002 [26]).

6a PLMN specific interfaces

6a.1 GCR-specific interface

6a.1.1 Interface between the MSC and its associated GCR (I-interface)

The GCR is the management data base for the voice group or broadcast calls in the area controlled by the associated MSC(s). Whenever the MSC needs data related to a requested voice group or broadcast call it interrogates the GCR to obtain the respective voice group or broadcast call attributes. The protocol used to transfer the data over this interface is not standardized.

Microsoft - Exhibit 1012
Microsoft v. Lemko- IPR2023-00531
Page 186 of 203

6a.2 (void)

6a.3 LCS-specific interfaces

6a.3.1 LCS interfaces using MAP

The following interfaces are based on MAP in LCS.

- **Lh interface:** interface between GMLC and HLR. This interface is used by the GMLC to request the address of the visited MSC or SGSN for a particular target UE whose location has been requested (see TS 29.002 [26]).
- **Lg interface:** interface between GMLC - MSC and GMLC - SGSN. This interface is used by the GMLC to convey a location request to the MSC or SGSN currently serving a particular target UE whose location was requested. The interface is used by the MSC or SGSN to return location results to the GMLC (see TS 29.002 [26]).
- **Lc interface:** between GMLC and gsmSCF, CAMEL. This interface is used to get location information for CAMEL based services. (see TS 29.002 [26]).

6a.3.2 (void)

6a.3.3 (void)

6a.3.4 (void)

6a.3.5 Interface between BSC and SMLC (Lb-interface)

In GERAN, a SMLC supports positioning via signaling on the Lb interface to the BSC serving the target MS.

Signalling on this interface uses BSSAP-LE, which is specified in TS 49.031 [50]

In UTRAN, the Lb interface is not standardized, the SMLC functionality is included in SRNC.

6a.3.6 Interface between Peer SMLCs (Lp-interface)

In GERAN, a SMLC may support the Lp interface to enable access to information and resources owned by another SMLC.

Signalling on this interface uses BSSAPP-LE, which is defined in TS 49.031 [50], and SMLCPP, which is specified in TS 48.031 [47].

In UTRAN, the SMLC functionality is included in SRNC and the Iur interface shall include the Lp interface type of functionality.

6a.3.7 Interface between BTS and LMU (Um-interface)

The Um/Uu interface specific to LCS is defined in TS 44.071 [55].

Microsoft - Exhibit 1012
Microsoft v. Lemko- IPR2023-00531
Page 187 of 203

6a.3.8 Interface between GMLC and External LCS Client (Le-interface)

The Le interface is used by the external LCS client to retrieve location information from the LCS server. Signalling on this interface may use the OMA Mobile Location Protocol (MLP) [62] and Open Service Access Application Programming Interface (OSA-API) [63].

6a.3.9 Interface between RNS and Stand-Alone LMU, UE (Uu-interface)

The Uu interface is used to communicate among the UE Positioning entities associated with the SRNC, the UEs and the stand-alone LMU. The Uu interface may pass measurement requests and results to and from the UE or the stand-alone LMU. UE Positioning operations at the Uu interface are generally defined in the 24- and 25-series of 3GPP Technical Specifications. Furthermore, 25.305 describes how a stand-alone LMU may be distinguished from a normal UE.

6a.3.10 Interface between SRNC and SAS (Stand-Alone SMLC) (Iupc-interface)

The Iupc interface defined for LCS is specified in TS 25.453 [66].

6a.3.11 Interface between GMLC and GMLC (Lr-interface)

The Lr interface is used by the GMLC to communicate with other GMLCs. Signalling on this interface may use the OMA Roaming Location Protocol (RLP) [69].

6a.4 CAMEL-specific interfaces

The CAMEL-specific interfaces are detailed in TS 23.078 [10c]. These interfaces are.

6a.4.1 GMSC - gsmSSF interface

This is an internal interface. The interface is described in the specification to make it easier to understand the handling of Detection Points (arming/disarming of DPs, DP processing etc.).

6a.4.2 gsmSSF - gsmSCF interface

This interface is used by the gsmSCF to control a call in a certain gsmSSF and to request the gsmSSF to establish a connection with a gsmSRF. Relationships on this interface are opened as a result of the gsmSSF sending a request for instructions to the gsmSCF.

6a.4.3 MSC - gsmSSF interface

This is an internal interface. The interface is described in the specification to make it easier to understand the handling of DPs (arming/disarming of DPs, DP processing etc.).

6a.4.4 gsmSCF - HLR interface

This interface is used by the gsmSCF to request information from the HLR. As a network operator option the HLR may refuse to provide the information requested by the gsmSCF.

This interface is also used for USSD operations, both for gsmSCF-initiated dialogues and MS-initiated dialogues (relayed via HLR). It is a network operator option whether to support or not USSD operations on this interface.

6a.4.5 gsmSCF - gsmSRF interface

This interface is used by the gsmSCF to instruct the gsmSRF to play tones/announcements to the users.

Microsoft - Exhibit 1012
Microsoft v. Lemko- IPR2023-00531
Page 188 of 203

6a.4.6 MSC - gsmSCF interface

This interface is used by the MSC to send supplementary service invocation notifications to the gsmSCF.

6a.4.7 SGSN - gprsSSF interface

This is an internal interface. The interface is described in the specification to make it easier to understand the handling of DPs (arming/disarming of DPs, DP processing etc.).

6a.4.8 gprsSSF - gsmSCF interface (Ge Reference Point)

This interface is used by the gsmSCF to control a GPRS session or individual PDP Context in a certain gprsSSF. Relationships between the gprsSSF and the gsmSCF (GPRS dialogues) on this interface are opened as a result of the gprsSSF sending a request for instructions to the gsmSCF. This interface is also known as Ge reference point [9a].

6a.5 CBS-specific interfaces

6a.5.1 Interface between the CBC and RNS (Iu_BC Interface)

The interface between the CBC and the RNS is specified in the 25.41x-series of Technical Specifications.

The CBC-RNS interface is used to carry information concerning:

- the CBS messages itself; and
- CBS delivery parameter.

6a.6 Number portability specific interfaces

6a.6.1 IN-based solution

6a.6.1.1 NPDB to MSC interface

Upon receiving an ISUP IAM, the (gateway or visited) MSC send a database query to the NPDB as a result of analysis of the received MSISDN. The MSISDN is included in the query to the NPDB. The NPDB determines whether the MSISDN is ported or not. If not, it responds back to the MSC to continue the normal call setup procedure for MT calls (optionally providing the Routing Number). If it is ported, the NPDB responds back to the MSC with a Routing Number pointing out the Subscription network.

6a.6.2 Signalling Relay-based solution

6a.6.2.1 GMSC to MNP-SRF interface

Upon receiving an ISUP IAM, the gateway MSC sends a routing interrogation to the MNP-SRF, which in turn will perform one of the actions, described in subclause 4a.7, depending on the portability status of the subscriber and the network configuration (see TS 23.066 [40]).

6a.6.2.2 MNP-SRF to HLR interface

When the MNP-SRF receives a routing interrogation from the GMSC or an interrogating network entity (non/call related signalling), and it determines that the subscriber is not ported or it has been ported from another network, the MNP-SRF relays the message to the HLR.

Microsoft - Exhibit 1012
Microsoft v. Lemko- IPR2023-00531
Page 189 of 203

6a.7 IM Subsystem Reference Points

6a.7.1 Reference Point HSS – CSCF (Cx Reference Point)

The Cx reference point supports information transfer between CSCF and HSS.

The main procedures that require information transfer between CSCF and HSS are

1) Procedures related to Serving CSCF assignment
2) Procedures related to routing information retrieval from HSS to CSCF
3) Procedures related to authorisation (e.g., checking of roaming agreement)
4) Procedures related to authentication: transfer of security parameters of the subscriber between HSS and CSCF
5) Procedures related to filter control: transfer of filter parameters of the subscriber from HSS to CSCF

Further information on the Cx reference point is provided in TS 23.228 [34].

6a.7.2 Reference Point CSCF – UE (Gm Reference Point)

The Gm reference point supports the communication between UE and IM CN subsystem, e.g. related to registration and session control.

The protocol used for the Gm reference point is SIP (as defined by RFC 3261 [61], other relevant RFC's, and additional enhancements introduced to support 3GPP´s needs).

6a.7.3 Reference Point MGCF – IMS-MGW (Mn Reference Point)

The Mn reference point describes the interfaces between the MGCF and IMS-MGW in the IMS. It has the following properties:

- full compliance with the H.248 standard functions for IMS – PSTN/PLMN interworking.- flexible connection handling which allows support of different call models and different media processing purposes not restricted to H.323 [54] usage.
- open architecture where extensions/Packages definition work on the interface may be carried out.
- dynamic sharing of IMS-MGW physical node resources. A physical IMS-MGW can be partitioned into logically separate virtual MGWs/domains consisting of a set of statically allocated Terminations.
- dynamic sharing of transmission resources between the domains as the IMS- MGW controls bearers and manage resources according to the H.248 [52] protocols and functions for IMS.

6a.7.4 Reference Point MGCF – CSCF (Mg Reference Point)

The Mg reference point allows the MGCF to forward incoming session signalling (from the PSTN) to the CSCF for the purpose of interworking with PSTN networks.

The protocol used for the Mg reference point is SIP (as defined by RFC 3261 [61], other relevant RFC's, and additional enhancements introduced to support 3GPP´s needs).

6a.7.5 (void)

Microsoft - Exhibit 1012
Microsoft v. Lemko- IPR2023-00531
Page 190 of 203

6a.7.6 Reference Point CSCF - MRFC (Mr Reference Point)

The Mr reference point allows interaction between an S-CSCF and an MRFC.

The protocol used for the Mr reference point is SIP (as defined by RFC 3261 [61], other relevant RFC's, and additional enhancements introduced to support 3GPP´s needs).

6a.7.6a Reference Point MRFC – MRFP (Mp Reference Point)

The Mp reference point allows an MRFC to control media stream resources provided by an MRF.

The Mp reference point has the following properties:

- Full compliance with the H.248 [52] standard.
- Open architecture where extensions (packages) definition work on the interface may be carried out.

6a.7.7 Reference Point CSCF – CSCF (Mw Reference Point)

The Mw reference point allows the communication and forwarding of signalling messaging between CSCFs, e.g. during registration and session control.

6a.7.8 (void)

6a.7.9 (void)

6a.7.10 Reference Point CSCF – BGCF (Mi reference point)

This reference point allows the Serving CSCF to forward the session signalling to the Breakout Gateway Control Function for the purpose of interworking to the PSTN networks.

The Mi reference point is based on external specifications i.e. SIP [61].

6a.7.11 Reference Point BGCF – MGCF (Mj reference point)

This reference point allows the Breakout Gateway Control Function to forward the session signalling to the Media Gateway Control Function for the purpose of interworking to the PSTN networks.

The Mj reference point is based on external specifications i.e. SIP [61].

6a.7.12 Reference Point BGCF/IBCF – BGCF (Mk reference point)

This reference point allows the Breakout Gateway Control Function/IBCF to forward the session signalling to another Breakout Gateway Control Function.

The Mk reference point is based on external specifications i.e. SIP [61].

6a.7.13 Reference Point CSCF- SLF (Dx Reference Point)

This interface between CSCF and SLF is used to retrieve the address of the HSS which holds the subscription for a given user.

This interface is not required in a single HSS environment. An example for a single HSS environment is a server farm architecture.

Details are described in TS 23.228 [34], subclause 5.8.1.

Microsoft - Exhibit 1012
Microsoft v. Lemko- IPR2023-00531
Page 191 of 203

6a.7.14 Reference Point to IPv6 network services (Mb reference point)

Via the Mb reference point IPv6 network services are accessed. These IPv6 network services are used for user data transport. Note, that GPRS provides IPv6 network services to the UE, i.e. the GPRS Gi reference point and the IMS Mb reference point may be the same.

6a.7.15 Reference Point S-CSCF – AS (ISC Reference Point)

This interface between Serving CSCF and the Application Servers (i.e., SIP Application Server, OSA Service Capability Server, or CAMEL IM-SSF) is used to provide services for the IMS.

Details are described in TS 23.228 [34], subclause 4.2.4.

6a.7.16 Reference Point HSS – SIP AS or OSA SCS (Sh Reference Point)

The Application Server (SIP Application Server and/or the OSA Service Capability Server) may communicate to the HSS. The Sh interface is used for this purpose. Details are described in TS 23.228 [34], subclause 4.2.4.

6a.7.17 Reference Point HSS – CAMEL IM-SSF (Si Reference Point)

The CAMEL Application Server (IM-SSF) may communicate to the HSS. The Si interface is used for this purpose. Details are described in TS 23.228 [34], subclause 4.2.4.

6a.7.18 Reference Point UE – AS (Ut Reference Point)

The Ut interface resides between the UE and the SIP Application Server.

The Ut interface enables the user to manage information related to his services. Such as creation and assignment of Public Service Identities, management of authorization policies that are used e.g. by Presence service, conference policy management, etc.

The AS may need to exhibit security related functions for the Ut interface, the details of these security functions are described in TS 33.222 [72].

For the protocol at the Ut reference point HTTP shall be supported.

6a.7.19 Reference Point AS- SLF (Dh Reference Point)

This interface between AS and SLF is used to retrieve the address of the HSS which holds the subscription for a given user.

This interface is not required in a single HSS environment. An example for a single HSS environment is a server farm architecture.

Details are described in TS 23.228 [34], subclause 5.8.1.

6a.7.20 Reference Point CSCF/BGCF - IBCF (Mx Reference Point)

The Mx reference point allows the communication and forwarding of signalling messages between a CSCF/BGCF and an IBCF, e.g. during session establishment.

6a.7.21 Reference Point IBCF - TrGW (Ix Reference Point)

This interface is used by the IBCF to control the TrGW, e.g. to request network address translation binding.

Microsoft - Exhibit 1012
Microsoft v. Lemko- IPR2023-00531
Page 192 of 203

6a.7.22 Reference Point I-CSCF – AS (Ma Reference Point)

This interface between Interrogating-CSCF and the Application Servers (i.e. SIP Application Server, OSA Service Capability Server, or CAMEL IM-SSF) is used to forward SIP requests destined to a Public Service Identity hosted by an Application Server directly to the Application Server.

Details are described in TS 23.228 [34], subclause 5.4.12.

6a.7.23 Reference Point P-CSCF – IMS Access Gateway (Iq Reference Point)

The Iq reference point is between the Proxy-CSCF and the IMS Access Gateway. It conveys the necessary information that is needed to allocate and release transport addresses.

Details are described in TS 23.228 [34], Annex G.

6a.8 Reference Points for Service Based Local Policy Control

6a.8.1 Reference Point GGSN – PDF (Go Reference Point)

This interface allows the Policy Decision Function (PDF) to apply policy to the bearer usage in the GGSN. For more information see TS 23.207 [28]

6a.8.2 Reference Point PDF – Application Function (Gq Reference Point)

This interface allows for dynamic QoS-related service information to be exchanged between the Policy Decision Function (PDF) and the Application Function (AF). This information is used by the PDF for service based local policy decisions. For more information see TS 23.207 [28].

6a.9 Reference Points for 3GPP/WLAN Interworking

6a.9.1 Reference point 3GPP AAA Server - HLR (D'/Gr' Reference Point)

This is the reference point between the 3GPP AAA server and the HLR up to and including Rel-4 and the HSS in Rel-5. The functionality of this reference point is similar to that of the Wx reference point. For more information see TS 23.234 [67].

6a.9.2 Reference point WLAN access network - 3GPP AAA Proxy/Server (Wa Reference Point)

This is the reference point between the WLAN access network and 3GPP AAA Proxy or Server. The AAA protocol on this reference point is used to transport authentication, authorization and charging data.

6a.9.3 Reference point 3GPP AAA Server – 3GPP AAA Proxy (Wd Reference Point)

This is the reference point between the 3GPP AAA Server and Proxy. the purpose of the protocols crossing this reference point is to transport authentication, authorization and related information. For more information see TS 23.234 [67].

Microsoft - Exhibit 1012
Microsoft v. Lemko- IPR2023-00531
Page 193 of 203

6a.9.4 Reference point 3GPP AAA Server/Proxy - WAG (Wg Reference Point)

This is the reference point between the 3GPP AAA server/proxy and WAG. It is used to provide information needed by the WAG to perform policy enforcement functions for authorised users and to transport per-tunnel based charging information from the WAG to the AAA Proxy in roaming scenarios.

6a.9.5 Reference point PDG - packet data networks (Wi Reference Point)

This is the reference point between the PDG and a packet data network. It may be an operator external public or private packet data network or an intra operator packet data network, e.g. for provision of IMS services.

6a.9.6 Reference Point 3GPP AAA Server/Proxy - PDG (Wm Reference Point)

This is the reference point between the 3GPP AAA server/proxy and PDG. The functionality of this reference point is to enable:

- The 3GPP AAA Server/Proxy to retrieve tunneling attributes and WLAN UE's IP configuration parameters from/via Packet Data Gateway
- Carrying messages for service authentication and authorization
- Carrying authentication data for the purpose of tunnel establishment, tunnel data authentication and encryption.

For more information see TS 23.234 [67].

6a.9.7 Reference Point WAG - WLAN access network (Wn Reference Point)

This is the reference point between the WAG and the WLAN access network. It is used to force traffic between a WLAN UE and PDG to go through the WAG.

6a.9.8 Reference Point WAG - PDG (Wp Reference Point)

This is the reference point between WAG and PDG. It is used to transport the Wu reference point protocol data packets.

6a.9.9 Reference point WLAN UE - PDG (Wu Reference Point)

This is the reference point between the 3GPP WLAN UE and PDG. The functionality of this reference point is to establish a tunnel between WLAN UE and PDG and to exchange data packets between WLAN UE and PDG.

6a.9.10 Reference point WLAN UE - WLAN access network (Ww Reference Point)

This is the reference point between the 3GPP WLAN UE and WLAN access network. The functionality of this reference point is specified by IEEE and outside the scope of 3GPP.

6a.9.11 Reference point 3GPP AAA Server - HSS (Wx Reference Point)

This is the reference point between the 3GPP AAA server and HSS. The functionality of this reference point is to enable:

- Retrieval of authentication vectors
- Retrieval of WLAN access-related subscriber information (profile)
- Registration of the 3GPP AAA Server of an authorised WLAN user in the HSS

Microsoft - Exhibit 1012
Microsoft v. Lemko- IPR2023-00531
Page 194 of 203

- Indication of change of subscriber profile
- Retrieval of online charging / offline charging function addresses from HSS.
- Retrieval of service related information

For more information see TS 23.234 [67].

6a.9.12 Reference point 3GPP AAA Server - SLF (Dw reference point)

This reference point is between the 3GPP AAA Server and the SLF. The prime purpose of the protocol(s) crossing this reference point is to enable the 3GPP AAA Server to find the address of the HSS which holds the subscriber data for a given user identity in a configuration with multiple separately addressable HSSs.

6a.10 MBMS specific reference points

6a.10.1 Reference point GGSN – BM-SC (Gmb Reference Point)

This reference point is used to exchange signalling between GGSN and BM-SC. This represents the network side boundary of the MBMS Bearer Service from a control plane perspective. This includes user specific Gmb signalling and MBMS bearer service specific signalling. The details for this reference point are described in TS 23.246 [70].

6a.11 Reference Points for Flow Based Charging

6a.11.1 Reference Point GGSN – CRF (Gx Reference Point)

This interface allows the Charging Rules Function (CRF) to control the Flow Based Charging functionality in the GGSN by means of providing the applicable charging rules. For more information see TS 23.125 [29].

6a.11.2 Reference Point CRF – Application Function (Rx Reference Point)

This interface allows for dynamic charging-related service information to be exchanged between the Charging Rules Function (CRF) and the Application Function (AF). This information is used by the CRF for the selection and completion of charging rules. For more information see TS 23.125 [29].

6a.12 Reference Points for 3GPP Generic User Profile (GUP)

6a.12.1 Reference Point GUP Server – Applications (Rg Reference Point)

The Rg reference point resides between the GUP Server and the Applications.

The Rg reference point allows applications to create, read, modify and delete any user profile data using the harmonized access interface. The GUP Server locates the data repositories responsible of the storage of the requested profile component(s).

The details of the Rg reference point are described in TS 23.240 [71].

6a.12.2 Reference Point GUP Server – HSS and Applications – HSS (Rp Reference Point)

The Rp reference point resides between the GUP Server and the HSS, and between the Applications and the HSS.

The Rp reference point enables the GUP Server and the Applications to access GUP Data Repositories. The HSS is one of the GUP Data Repositories. It stores the IM CN Subsystem user related data.

The details of the Rp reference point are described in TS 23.240 [71].

Microsoft - Exhibit 1012
Microsoft v. Lemko- IPR2023-00531
Page 195 of 203

7 Reference points between the PLMN and other networks

The reference points between the PLMN and other networks, including dedicated networks, are described in the 49-series of Technical Specifications and in the 29-series of Technical Specifications.

7.1 Reference point fixed networks - MSC

The MSC is based on a normal ISDN exchange. It has, for call control, the same reference points as the fixed network exchanges. The signalling reference point considered in the Technical Specifications is related to the signalling system No. 7 User Parts TUP and ISUP associated to the circuits used for incoming and outgoing calls.

7.2 Reference point GGSN - packet data networks (Gi reference point)

This is the reference point between the GGSN and a packet data network. It may be an operator external public or private packet data network or an intra operator packet data network, e.g. for provision of IMS services.

7.3 Reference point GMLC - external LCS Client (Le reference point)

At this reference point external LCS Clients request services from the PLMN.

7.4 Reference Point CSCF/IBCF – Multimedia IP networks (Mm Reference Point)

This is an IP interface between CSCF/IBCF and IP networks. This interface is used, for example, to receive a session request from another SIP server or terminal. Detailed specifications of the Mm reference point are not provided in this release of specifications.

7.5 (void)

7.6 Reference point PDG - packet data networks (Wi reference point)

This is the reference point between the PDG and a packet data network. It may be an operator external public or private packet data network or an intra operator packet data network, e.g. for provision of IMS services.

7.7 Reference Point WAG – WLAN access network (Wn reference point)

This is the reference point between the WAG and the WLAN access network. It is used to force traffic between a WLAN UE and PDG to go through the WAG.

Microsoft - Exhibit 1012
Microsoft v. Lemko- IPR2023-00531
Page 196 of 203

Annex A (informative): Description for GLR-related entities and interfaces

This annex describes the GLR-related entities and the interfaces. This annex is an informative annex. The 'informative' means just that the GLR is an optional functional entity to optimize signalling traffic between PLMNs. Therfore, this annex is normative to a PLMN which introduce the GLR.

A.1 Normative references

[A1] 3GPP TS 23.119: "3rd Generation Partnership Project; Technical Specification Group Core Network; Gateway Location Register (GLR); Stage2".

A.2 Definitions related to Gateway Location Register (GLR)

A.2.1 Gateway Location Register (GLR)

This entity handles location management of roaming subscriber in visited network without involving HLR. The location register function in the GLR stores subscription information and routeing information for both CS services and PS services. This entity can be only located in a visited PLMN.

A.2.2 Intermediate Mobile-services Switching Centre (IM-MSC)

This entity is used as serving MSC towards home network and relay some messages between home network and serving MSC. This entity can be only located in a visited PLMN.

A.2.3 Intermediate GPRS Serving Node (IM-GSN)

This entity is used as serving GSN towards home network and relay some PDU notification messages between serving GSN and Gateway GSN. This entity can be only located in a visited PLMN.

A.3 The entities of the mobile system

A.3.1 Gateway Location Register (GLR)

GLR is pseudo-HLR located in visited network. The roamer's information is stored in it and handles location management of it within the network. Presence of GLR is invisible from home network therefore interface between HLR and GLR is same as one of HLR and VLR. Also, the interface between the VLR and GLR is the same as the one between the VLR and the HLR.

The GLR is a logical node and acts as a VLR for MAP signalling (e.g. PRN) from the HPLMN point of view. The GLR acts as a HLR for MAP signalling (e.g. Register SS) from the VPLMN point of view.

The GLR also acts as an SGSN for MAP signalling only (e.g. ISD) from the HPLMN point of view. This is because MAP operations such as ISD must be terminated at the GLR for the purpose of subscriber data caching.

The GLR shall terminate all TC dialogues and start new dialogues towards the HLR or the VLR. The GLR shall generate SCCP address of the HLR (i.e. E.214 MGT) from IMSI.

Microsoft - Exhibit 1012
Microsoft v. Lemko- IPR2023-00531
Page 197 of 203

A.3.2 Intermediate Mobile-services Switching Centre (IM-MSC)

The Intermediate MSC (IM-MSC) is the logical node, which represent MSCs in the visited network. Some service features use the MSC Number stored in the HLR directly to deliver message from a certain node in home network (e.g. SMS-GMSC) to serving MSC in visited network. In such case, the message is firstly distributed to representative MSC (i.e. IM-MSC) and it relays it to actual serving MSC interrogating routing information to GLR.

- The Intermediate MSC (IM-MSC) is a logical node and represents the VMSC in the GLR equipped VPLMN.
- The IM-MSC acts as the VMSC for the HPLMN in the same way that the GLR acts as a VLR for HPLMN. The IM-MSC terminates MAP signalling from the HPLMN towards the VMSC and forwards the signal to the actual VMSC.
- The IM-MSC has an address interrogation function with which it is able to obtain the actual VMSC Number from the GLR.
- The IM-MSC is implemented in the same physical node as the one in which the GLR is implemented.
- The GLR alters the VMSC Number to the IM-MSC Number within an Update Location message.
- The IM-MSC Number is the E.164 Number assigned to the IM-MSC [53].
- The interrogation function of the IM-MSC is similar to that in the SMS-GMSC.

A.3.3 Intermediate GPRS Serving Node (IM-GSN)

The Intermediate GSN (IM-GSN) is a logical node and represents the SGSN for some GTP signalling termination in a GLR equipped VPLMN.

The IM-GSN acts as an SGSN for ***only some GTP signalling messages*** (i.e. PDU_Notification request/response, PDU_Notification_reject request/response) from the HPLMN point of view. The IM-GSN terminates these GTP signalling messages from the HPLMN towards SGSN and forwards the signal to the actual SGSN. The IM-GSN has an address interrogation function with which it is able to request the actual SGSN address from the GLR.

Apart from the case described above (i.e. PDU_Notification request/response, PDU_Notification_reject request/response), all other GTP signalling should be handled directly between the SGSN and the GGSN.

NOTE: ***MAP signalling*** towards the SGSN is ***NOT*** terminated at the IM-GSN. Instead it is terminated at the GLR.

A.4 Configuration of a Public Land Mobile Network

A.4.1 Basic configuration with GLR introduction

In the basic configuration with GLR introduction presented in figure A.1, all the functions related to GLR introduction are considered implemented in different equipments. Therefore, all the interfaces within PLMN are external. Interfaces GLa, GLb, GLc, GLd, GLf, GLg, GLh, and GLi need the support of the Mobile Application Part of the signalling system No. 7 to exchange the data necessary to provide the mobile service. No protocols for the GLe interface are standardized. GLj and GLk need the support of GPRS Tunneling Protocol - Control to provide the packet domain services.

Microsoft - Exhibit 1012
Microsoft v. Lemko- IPR2023-00531
Page 198 of 203

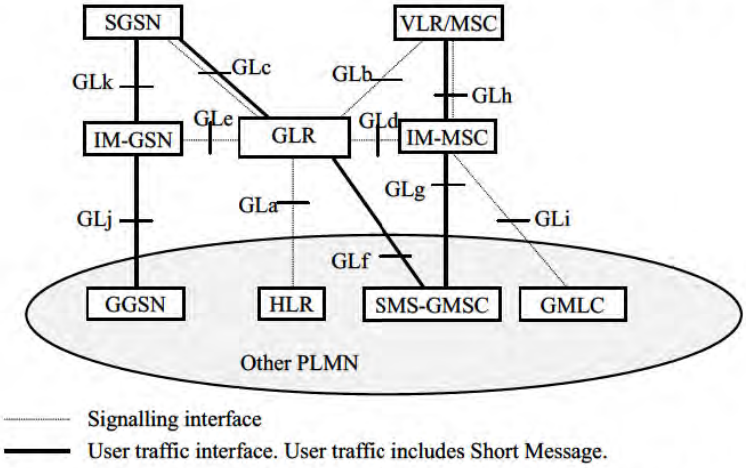

Figure A.1: Configuration of a PLMN and interfaces with GLR

A.5 PLMN interfaces

A.5.1 Interface between the HLR and the GLR (GLa-interface)

In circuit switched domain, this interface is the same as that between the VLR and the HLR (see TS 29.002 [26]). The HLR regards the GLR as the VLR via this interface. On the other hand, in packet switched domain, this interface is the same as that between the SGSN and the HLR (see TS 29.002 [26]). The HLR regards the GLR as the SGSN via this interface

A.5.2 Interface between the VLR and the GLR (GLb-interface)

This interface is the same as those between the VLR and the HLR (see TS 29.002 [26]). The VLR regards the GLR as the HLR via this interface.

A.5.3 Interface between the SGSN and the GLR (GLc-interface)

This interface is the same as those between the SGSN and the HLR (see TS 29.002 [26]). The SGSN regards the GLR as the HLR via this interface.

A.5.4 Interface between the GLR and the IM_MSC (GLd-interface)

In the network with the GLR, when the IM_MSC receives a message, it interrogates the GLR for the routing information of the MSC. However, this interface is internal because GLR and IM-MSC are implemented in the same physical node and the protocol on this interface is not specified.

A.5.5 Interface between the GLR and the IM_GSN (GLe-interface)

In the network with the GLR when the IM_GSN receiving a PDU notification from the GGSN, the IM_GSN relays the notification to the SGSN by interrogating via the interface the routing information to the GLR. The interrogation uses the same operation on the interface between the SGSN and the HLR (see TS 29.002 [26]).

Microsoft - Exhibit 1012
Microsoft v. Lemko- IPR2023-00531
Page 199 of 203

A.5.6 Interface between the SMS-GMSC and the GLR (GLf-interface)

This interface is used to forward mobile-terminated short messages in the network with the GLR in case of SMS transfer over GPRS. Signalling on this interface uses the Mobile Application Part (MAP) (see TS 29.002 [26]).

The SMS-GMSC regards the GLR as the SGSN via this interface.

A.5.7 Interface between the SMS-GMSC and the IM_MSC (GLg-interface)

This interface is used to forward short messages in the network with the GLR in case of SMS transfer over non-GPRS. Signalling on this interface uses the Mobile Application Part (MAP) (see TS 29.002 [26]).

The SMS-GMSC regards the IM_MSC as the MSC via this interface.

A.5.8 Interface between the MSC and the IM_MSC (GLh-interface)

This interface is used to forward short messages in the network with the GLR in case of SMS transfer over non-GPRS. Also this interface is used to exchange data needed by the MSC to perform subscriber authorization and allocate network resources. Signalling on this interface uses the Mobile Application Part (MAP) (see TS 29.002 [26]).

A.5.9 Interface between the GMLC and the IM_MSC (GLi-interface)

Also this interface is used to exchange data needed by the MSC to perform subscriber authorization and allocate network resources. Signalling on this interface uses the Mobile Application Part (MAP) (see TS 29.002 [26]).

The GMLC regards the IM_MSC as the MSC via this interface.

A.5.10 Interface between the GGSN and the IM_GSN (GLj-interface)

In the network with the GLR when receiving a PDP PDU from the external network the GGSN sends a notification to the IM_GSN by the routing information from the HLR (see TS 29.060 [51]). The GGSN regards the IM_GSN as the SGSN via this interface.

A.5.11 Interface between the SGSN and the IM_GSN (GLk-interface)

In the network with the GLR when receiving a PDP notification from the GGSN, the IM_GSN relays the notification to the SGSN by the routing information from the GLR (see TS 29.060 [51]). The SGSN regards the IM_GSN as the GGSN via this interface.

Microsoft - Exhibit 1012
Microsoft v. Lemko- IPR2023-00531
Page 200 of 203

Annex B (informative): Change history

Change history								
Date	TSG #	TSG Doc.	CR	Rev	Subject/Comment	Cat	Old	New
09/1999	-	-	-	-	renumberring of the present document from 03.02 to 23.002 (23.002 v.3.0.0 identical to 03.02 v.7.0.0)	-	03.02v7.0.0	23.002v3.0.0
10/1999	SP-05	SP-99397	0001	-	Incorporation of UMTS aspects	B	3.0.0	3.1.0
01/2000	SP-06	SP-99546	0002	1	Addition of GLR related descriptions. (also MCC update of some references)	B	3.1.0	3.2.0
03/2000	SP-07	SP-000084	0004	-	General improvements of the split between section 3 (Definitions and abbreviations) and section 4 (The entities of the mobile system).	F	3.2.0	3.3.0
03/2000	SP-07	SP-000084	0005	1	Re-ordering of section 4 (The entities of the mobile system).	D	3.2.0	3.3.0
03/2000	SP-07	SP-000084	0006	-	Re-ordering of section 5 (Configuration of a Public Land Mobile Network).	D	3.2.0	3.3.0
03/2000	SP-07	SP-000084	0007	-	Re-ordering of section 6 ("PLMN interfaces").	D	3.2.0	3.3.0
03/2000	SP-07	SP-000084	0008	-	Simplification of the figure 1 (configuration of a PLMN and interfaces)	D	3.2.0	3.3.0
03/2000	SP-07	SP-000084	0009	1	Introduction of CAMEL aspects.	B	3.2.0	3.3.0
03/2000	SP-07	SP-000084	0011	1	Introduction of CBS aspects	B	3.2.0	3.3.0
03/2000	SP-07	SP-000084	0012	2	Add LCS enhancements	C	3.2.0	3.3.0
03/2000	SP-07	SP-000084	0013	4	Define GSM LCS parts and add UMTS LCS "hooks" in the network architecture.	C	3.2.0	3.3.0
03/2000	SP-07	SP-000084	0014	1	Incorporation of network architecture material coming from section 4 of 29.002	F	3.2.0	3.3.0
10/2000	SP-09	SP-000449	0016	-	Introduction of R00 Definitions from 23.821 into 23.002	B	3.3.0	5.0.0
10/2000	SP-09	SP-000449	0017	-	CR on functional elements	B	3.3.0	5.0.0
10/2000	SP-09	SP-000449	0018	-	CR on reference model from 23.821	B	3.3.0	5.0.0
10/2000	SP-09	SP-000449	0019	-	CR on reference points from 23.821	B	3.3.0	5.0.0
12/2000	SP-10	SP-000587	0024	-	CAMEL for the PS domain	F	5.0.0	5.1.0
03/2001	SP-11	SP-010115	0033	1	Clarification of the difference between MGW in BICCN and IMS	D	5.1.0	5.2.0
03/2001	SP-11	SP-010115	0034	-	Introduction of Iu-CS and Iu-PS interfaces to BSS of type GERANin the network architecture	A	5.1.0	5.2.0
03/2001	SP-11	SP-010115	0035	1	CSCF-GGSN interface	B	5.1.0	5.2.0
03/2001	SP-11	SP-010115	0041	-	Missing Nc interface in basic configuration figure	A	5.1.0	5.2.0
03/2001	SP-11	SP-010115	0044	2	Clarification to the GGSN/PCF interface to the R5 reference architecture	F	5.1.0	5.2.0
03/2001	SP-11	SP-010115	0046	-	Resolution of editor's note in the MGW description	A	5.1.0	5.2.0
03/2001	SP-11	SP-010115	0050	-	Signalling and User Traffic Interfaces	A	5.1.0	5.2.0
06/2001	SP-12	SP-010329	0053	1	Addition of Radio Access Technologies	A	5.2.0	5.3.0
06/2001	SP-12	SP-010329	0062	1	Clarification of the role of the SGWs	A	5.2.0	5.3.0
06/2001	SP-12	SP-010329	0051	3	Addition of GTT Specific sntities	B	5.2.0	5.3.0
06/2001	SP-12	SP-010329	0037	1	HSS / HLR structuring	C	5.2.0	5.3.0
10/2001	SP-13	SP-010511	0061	2	CR on Introduction of Dx Reference Point in the IMS Reference Architecture"	F	5.3.0	5.4.0
10/2001	SP-13	SP-010511	0063	1	CR on "Update the IP MM Subsystem configuration to include the BGCF node"	F	5.3.0	5.4.0
10/2001	SP-13	SP-010511	0068	-	CR on "MRF functionality"	C	5.3.0	5.4.0
01/2002	SP-14	SP-010708	0070	-	Editorial alignment of 23.002 on CSCF	D	5.4.0	5.5.0
01/2002	SP-14	SP-010708	0072	-	Aligning MGW descriptions	D	5.4.0	5.5.0
01/2002	SP-14	SP-010708	0074	-	Correction of abbreviation of CSCF	D	5.4.0	5.5.0
01/2002	SP-14	SP-010708	0075	2	HSS section clean up	C	5.4.0	5.5.0
01/2002	SP-14	SP-010708	0079	-	Correction of Gi reference point definition	F	5.4.0	5.5.0
01/2002	SP-14	SP-010708	0082	-	Deleting SIWF functionality	A	5.4.0	5.5.0
01/2002	-	MCC correction	-	-	Introduction of section 6a.7.13 on Dx Reference Point from CR #0061r2	-	5.4.0	5.5.0
03/2002	SP-15	SP-020165	0077	3	Editorial correction to References	D	5.5.0	5.6.0
03/2002	SP-15	SP-020165	0078	2	Introduction of an IMS bearer reference point	F	5.5.0	5.6.0
03/2002	SP-15	SP-020165	0085	-	Corrections to the Radio Network System (node B) definitions	F	5.5.0	5.6.0
03/2002	SP-15	SP-020165	0087	-	Nb and Nc reference points - editorial corrections	D	5.5.0	5.6.0
03/2002	SP-15	SP-020165	0090	-	Deletion of Reference Point towards SCP	F	5.5.0	5.6.0
03/2002	SP-15	SP-020165	0091	1	BGCF: Alignment to 23.228	F	5.5.0	5.6.0
03/2002	SP-15	SP-020165	0093	-	Removal of the Sr Reference point	F	5.5.0	5.6.0

Microsoft - Exhibit 1012
Microsoft v. Lemko- IPR2023-00531
Page 201 of 203

03/2002	SP-15	SP-020165	0123	2	Application Server Definition	F	5.5.0	5.6.0
06/2002	SP-16	SP-020310	0095	2	Alignment with TS23.271	F	5.6.0	5.7.0
06/2002	SP-16	SP-020310	0092	2	General updates due to Intra Domain Connection of RAN nodes to multiple CN nodes	F	5.6.0	5.7.0
06/2002	SP-16	SP-020310	0094	1	Security Gateway	F	5.6.0	5.7.0
09/2002	SP-17	SP-020530	0058	1	The usage of Iu-interface signalling is missing in the E-interface description	A	5.7.0	5.8.0
09/2002	SP-17	SP-020530	0097	2	Mc interface	F	5.7.0	5.8.0
09/2002	SP-17	SP-020530	0098	1	Clean-up	F	5.7.0	5.8.0
09/2002	SP-17	SP-020530	0103	1	IMS Reference Points	F	5.7.0	5.8.0
12/2002	SP-18	SP-020827	0112	1	Scope of TS 23.002	F	5.8.0	5.9.0
12/2002	SP-18	SP-020827	0115	2	Corrections in the LCS figures	A	5.8.0	5.9.0
12/2002	SP-18	SP-020827	0108	5	Corrections in the LCS descriptions of 23.002	A	5.8.0	5.9.0
12/2002	SP-18	SP-020827	0106	1	Service architecture	F	5.8.0	5.9.0
12/2002	SP-18	SP-020827	0110	-	PCF to PDF Changes	F	5.8.0	5.9.0
03/2003	SP-19	SP-030115	0121	2	LCS architecture in 5	F	5.9.0	5.10.0
03/2003	SP-19	SP-030115	0118	-	Change of reference to LIF document	F	5.9.0	5.10.0
03/2003	SP-19	SP-030115	0119	1	Management interface	B	5.9.0	6.0.0
03/2003	-	MCC correction	-	-	Editorial to correct cover page to indicate Rel-6 not Rel-5	-	6.0.0	6.0.1
06/2003	SP-20	SP-030299	0132	1	Architecture corrections	A	6.0.1	6.1.0
06/2003	SP-20	SP-030299	0124	-	Gd reference point	F	6.0.1	6.1.0
06/2003	SP-20	SP-030299	0128	1	Ge reference point	F	6.0.1	6.1.0
06/2003	SP-20	SP-030299	0129	2	Management interface	F	6.0.1	6.1.0
06/2003	SP-20	SP-030299	0127	2	SLF on Sh interface	B	6.0.1	6.1.0
09/2003	SP-21	SP-030521	0134	2	Use of Security Gateways	A	6.1.0	6.2.0
12/2003	SP-22	SP-030652	0135	4	Gq reference point	B	6.2.0	6.3.0
03/2004	SP-23	SP-040031	0136	-	Gq clean-up	F	6.3.0	6.4.0
06/2004	SP-24	SP-040312	0138	1	Introduction of WLAN Interworking functional elements in 23.002	F	6.4.0	6.5.0
06/2004	SP-24	SP-040312	0139	-	Introduction of WLAN Interworking reference points and configuration in 23.002	F	6.4.0	6.5.0
06/2004	SP-24	SP-040312	0141	2	Configuration of Presence Service	F	6.4.0	6.5.0
06/2004	SP-24	SP-040312	0142	1	Correction on the scope of the Ut reference point	F	6.4.0	6.5.0
06/2004	SP-24	SP-040312	0143	-	Missing Lr reference point in 23.002	F	6.4.0	6.5.0
12/2004	SP-26	SP-040750	0145	-	Floor control	F	6.5.0	6.6.0
12/2004	SP-26	SP-040750	0146	-	Removing GPS specifity for SAS to unify with RAN Technical Specifications	F	6.5.0	6.6.0
03/2005	SP-27	SP-050104	0148	2	Inclusion of WLAN functionality in HSS description	F	6.6.0	6.7.0
03/2005	SP-27	SP-050104	0153	-	Generalising Subscriber Location Function (SLF) to support WLAN and Removal of WLAN charging reference points and functional entities	F	6.6.0	6.7.0
06/2005	SP-28	SP-050332	0154	-	Missing MBMS Architecture entities	F	6.7.0	6.8.0
06/2005	SP-28	SP-050332	0156	1	Addition of Flow Based Charging architecture.	F	6.7.0	6.8.0
09/2005	SP-29	SP-050475	0157	3	Introduction of GUP Server in the network architecture	F	6.8.0	6.9.0
09/2005	SP-29	SP-050476	0159	1	Introduction of IMS ALG and TrGW	F	6.8.0	6.9.0
09/2005	SP-29	SP-050478	0160	-	Correction of Wg reference point	F	6.8.0	6.9.0
09/2005	SP-29	SP-050479	0162	1	Reference to OMA specifications used at Le and Lr interfaces	F	6.8.0	6.9.0
12/2005	SP-30	SP-050664	0163	1	Interface between I-CSCF and AS	F	6.9.0	6.10.0
12/2005	SP-30	SP-050670	0161	3	Routing by the MGCF	B	6.10.0	7.0.0
03/2006	SP-31	SP-060129	0169	1	Introduction of IBCF in 23.002	C	7.0.0	7.1.0

Microsoft - Exhibit 1012
Microsoft v. Lemko- IPR2023-00531
Page 202 of 203

History

Document history		
V7.0.0	December 2005	Publication
V7.1.0	March 2006	Publication

Microsoft - Exhibit 1012
Microsoft v. Lemko- IPR2023-00531
Page 203 of 203