# GPRS architecture

**GSM 03.60**

**Service description**

Stage 2



## Table of contents

1. Introduction
2. GPRS architectures
3. GPRS mobility management
4. GPRS session management
5. GPRS data transfer
6. Information storage
7. Interaction with other GSM services
8. Some detailed GPRS features
9. Summary





Patent Owner, Lemko Corp. - Ex. 2012, p. 1

# 1. GPRS access interfaces and reference points

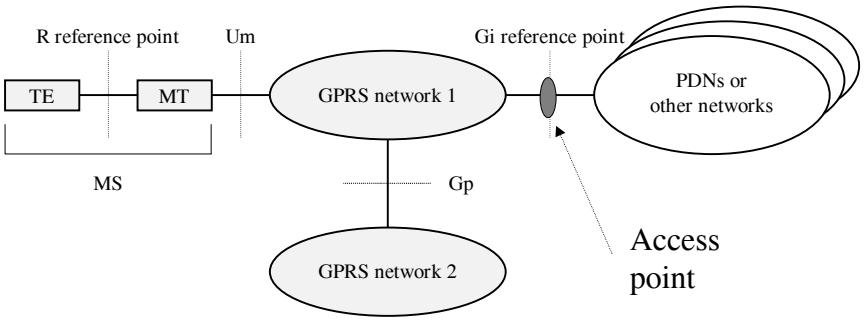




# 2. GPRS Architectures

- 2.1 Interfaces
- 2.2 Network elements
- 2.3 Protocol stacks
  - 2.3.1 Data transfer stacks
  - 2.3.2 Signaling stacks





Patent Owner, Lemko Corp. - Ex. 2012, p. 2

# 2.1 Logical architecture

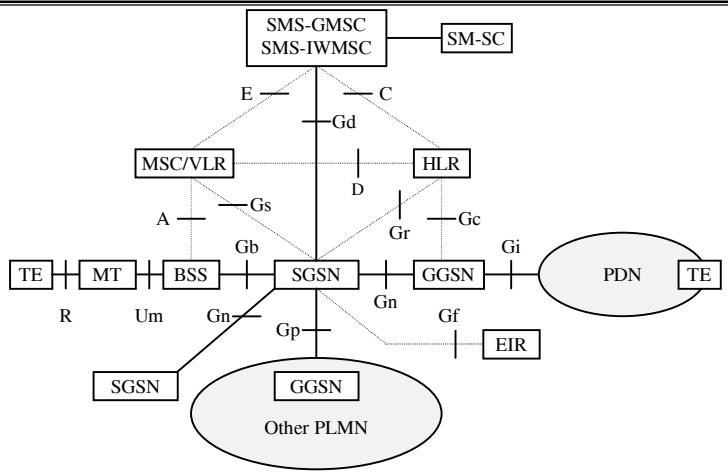




# 2.1 Logical architecture (another view)

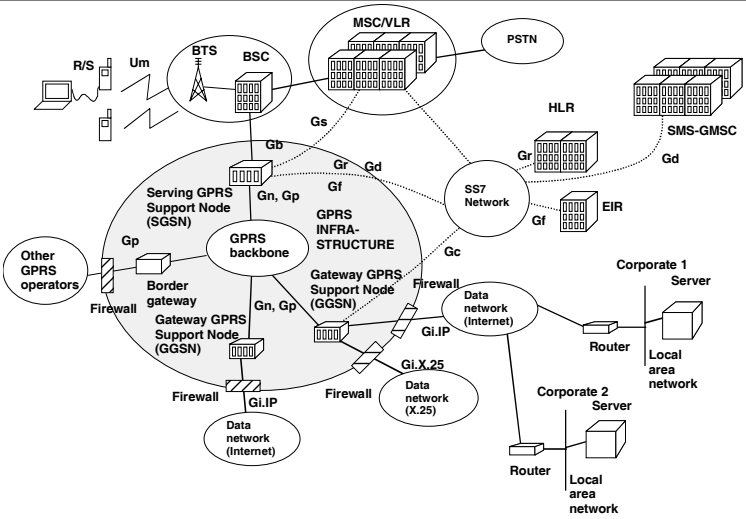






Patent Owner, Lemko Corp. - Ex. 2012, p. 3

## 2.2 GPRS network elements

- Serving GPRS Support Node (SGSN)
- Gateway GPRS Support Node (GGSN)
- Border Gateways (BG)
- Backbone network
  - Intra-PLMN
  - Inter-PLMN
- HLR
- MSC/VLR
- SMS-GMSC/SMS-IWMSC



## 2.2 Backbone networks

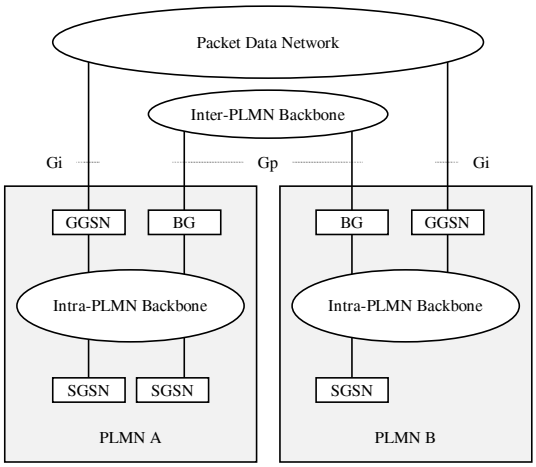






Patent Owner, Lemko Corp. - Ex. 2012, p. 4

# 2.3 Transmission and signaling planes

- Data transfer plane
  - User data protocol both data and signaling
- Signaling planes
  - GPRS signaling
  - In-band signaling



# 2.3.1 Transmission plane

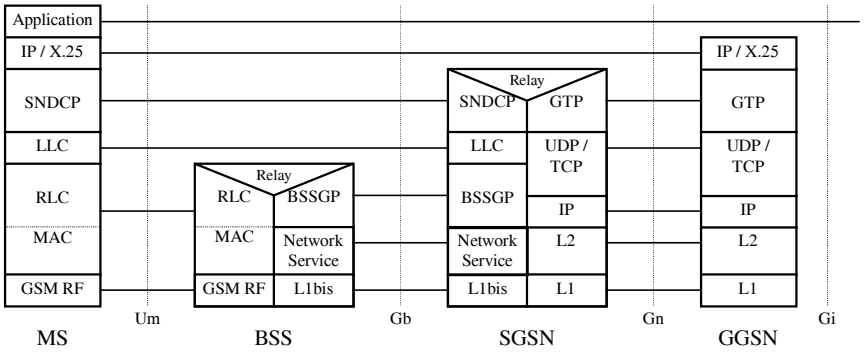






Patent Owner, Lemko Corp. - Ex. 2012, p. 5

## 2.3.2 Signaling plane: MS-SGSN

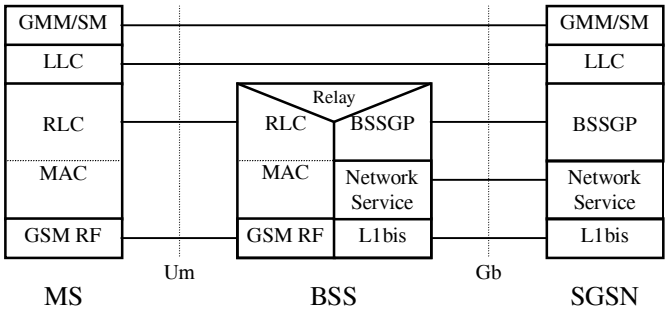




## 2.3.2 Signaling plane: SGSN-HLR

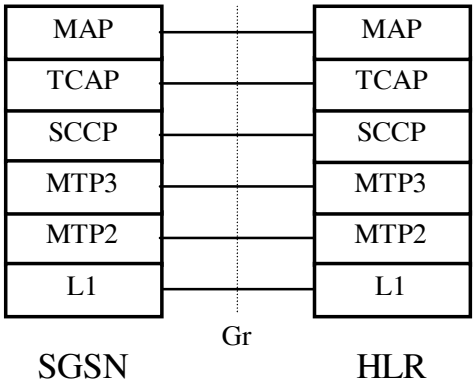






Patent Owner, Lemko Corp. - Ex. 2012, p. 6

## 2.3.2 Signaling plane: SGSN-MSC/VLR

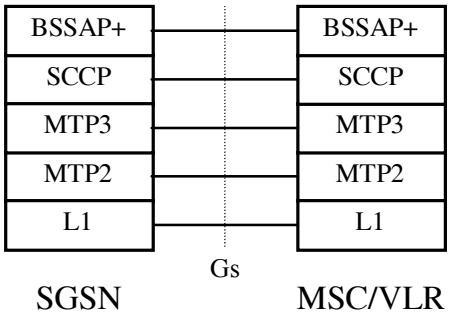




## 2.3.2 Signaling plane: SGSN-EIR

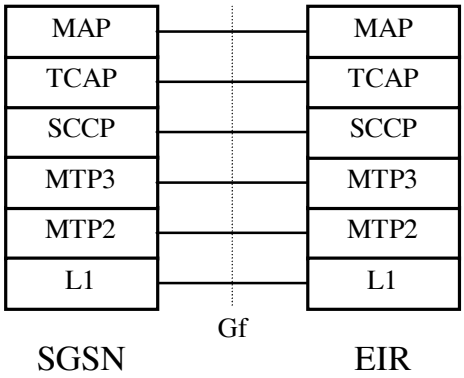






Patent Owner, Lemko Corp. - Ex. 2012, p. 7

## 2.3.2 Signaling plane: SGSN- SMS-MSC

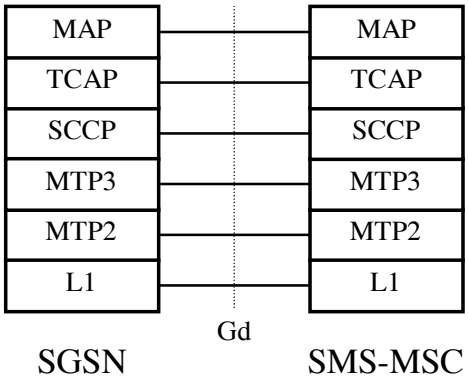




## 2.3.2 Signaling plane: GSN-GSN

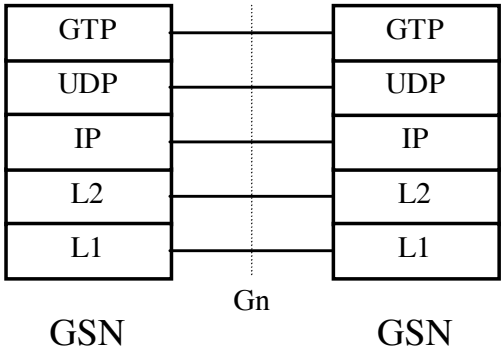






Patent Owner, Lemko Corp. - Ex. 2012, p. 8

## 2.3.2 Signaling plane: GGSN-HLR (direct MAP)

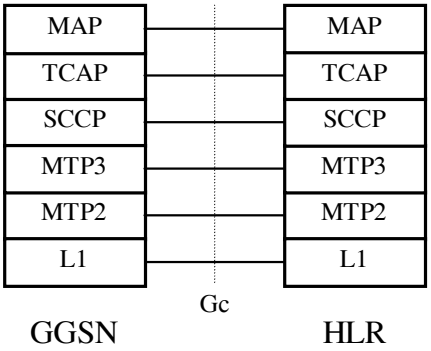




## 2.3.2 Signaling plane: GGSN-HLR (via protocol converter)

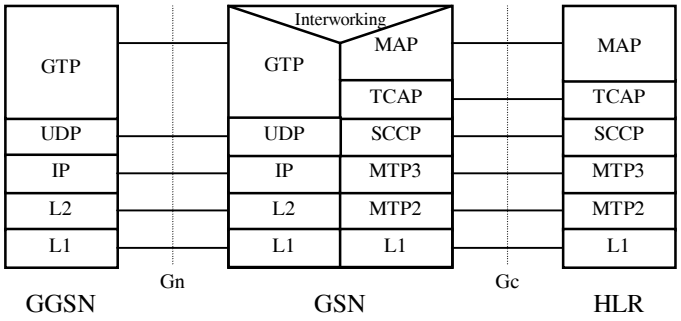






Patent Owner, Lemko Corp. - Ex. 2012, p. 9

# 3. GPRS mobility management

- 3.1 Mobility management basic concepts
- 3.2 GPRS attach
- 3.3 GPRS detach
- 3.4 Security functions
- 3.5 Location management
  - 3.5.1 Routing area update
  - 3.5.2 Combined Routing and Location area updates
  - 3.5.3 GPRS paging



# 3.1 Mobility management: Basic concept

- Mobility management is needed in GPRS to
  - Attach
    - Know who is the MS and what it can or is allowed to do
  - Detach
    - Leave the system
  - "Location" updates (Routing area and Cell updates)
    - Know the location of the MS
      - Route the mobile terminated packets to the MS
      - Mobile originated packet has no routing problem (only one possible route MS->SGSN and one route SGSN->GGSN)
    - How to save the battery in MS?
    - How to minimize radio usage (pagings in downlink and "location" updates and paging responses in uplink)?





Patent Owner, Lemko Corp. - Ex. 2012, p. 10

## 3.1 Mobility management: Basic concept

- Solutions and constraints in the real world
  - Attach and Detach typically happen so seldom that these procedures do not need to be so optimized
    - Attach in the morning and detach in the evening
    - Normally this is not a big issue
  - Mobility management after attachment is the problem!
    - An UK operator has said that a typical user changes the cell in every 30…40 seconds (1000 times in a 8 hours working day)
    - Sending data in uplink consumes much battery, "standby time and talk time" will be reduced
    - There will be large number of MSs attached to the GPRS service
      - Typical Erlang law won't apply for GPRS (IP traffic follows a "train model")



## 3.1 Mobility management: Basic concept

- Two extremes
  1. MS updates its location only when it changes "a big area"
     - Like in GSM, update network when changing a Location Area (when no call is established)
     - Good for MSs, which move frequently, but have little to receive

     \+ Saves battery, less MS originated updates

     \+ Mobile may move around the area without telling the network

     \+ Uplink radio capacity is not wasted so much for mobility management messages

     \- Uplink radio capacity is wasted for paging responses

     \- MS's location is not known exactly, every downlink packet requires paging of the mobile

     \- Data transfer is delayed significantly!

     \- Paging load increases (data traffic is totally different than voice calls in GSM)





Patent Owner, Lemko Corp. - Ex. 2012, p. 11

## 3.1 Mobility management: Basic concept

2. MS updates its location to network in every cell change
   - Like in GSM, "update location in every cell change" when a call is established
   - Good for MSs that get lot of data downlink and move seldom

   + MS's location is always known in accuracy of cell
   + No paging is needed
   + Paging channel practically unused
   + Data delivery is very fast, no need to wait paging response
   - MS's battery is draining due to continuous cell updates
   - Uplink radio capacity is wasted with continuous cell updates



## 3.1 Mobility management: Basic concept: GPRS approach

- GPRS mobility management something in the between (a reasonable compromise)
  - When MS is not active, use approach 1 (inform the network only when changing the big area)
    - MS is said to be in "standby state"
    - The area in GPRS is called Routing Area (RA)
    - RA is a subset of GSM Location area (LA)
    - 1 cell $\leq$ RA $\leq$ LA
  - When MS is active, use approach 2 (inform the network in every cell change)
    - MS is said to be in "Ready state"
  - How to move between Ready and Standby states?
    - Standby->Ready: When MS sends a packet, start also a timer
    - Ready->Standby: When timer expires





Patent Owner, Lemko Corp. - Ex. 2012, p. 12

# 3.1 Mobility management: mobility states, non-anonymous MS

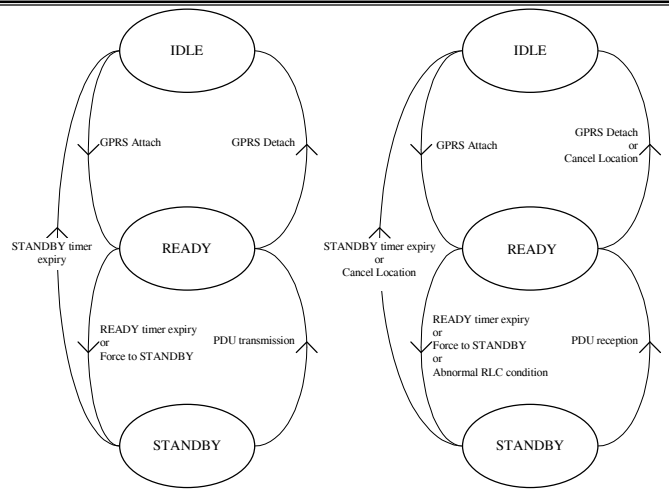


MM State Model of MS MM State Model of SGSN



# 3.2 GPRS/IMSI Attach procedure

- What happens in GPRS Attach?
  - Inform the network for the MS's request to be active
  - Network can/should check the MS's identity
  - Download MS's subscription information from HLR to SGSN
    - if SGSN does not already have that info
  - Update also MSC/VLR
    - if also IMSI Attach is performed





Patent Owner, Lemko Corp. - Ex. 2012, p. 13

# 3.2 GPRS/IMSI Attach procedure

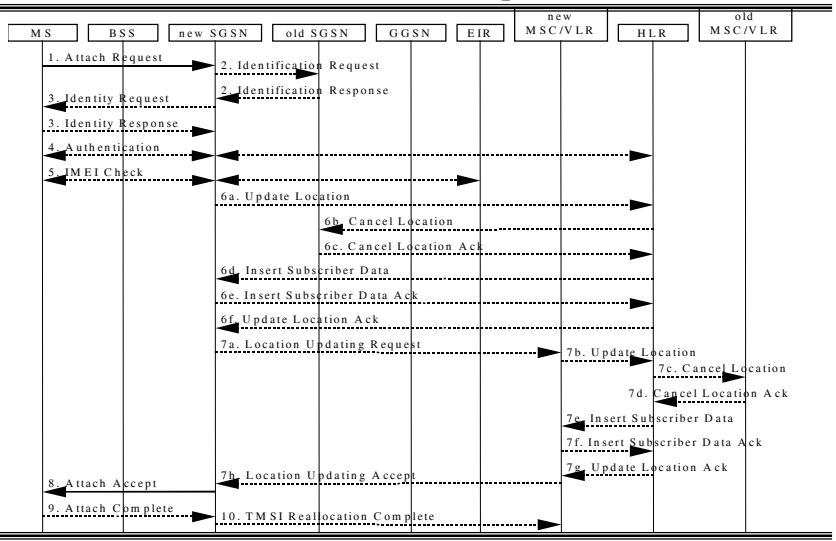




# 3.3 MS initiated Detach

- What happens in GPRS Detach
  - MS informs that it wants to leave the system
    - This is MS's wish
  - If any contexts is active, network will clear them
- Afterwards
  - MS's location is not any more tracked
  - MS does not inform its whereabout
  - No MO or MT data transfer is possible





Patent Owner, Lemko Corp. - Ex. 2012, p. 14

## 3.3 MS initiated Detach

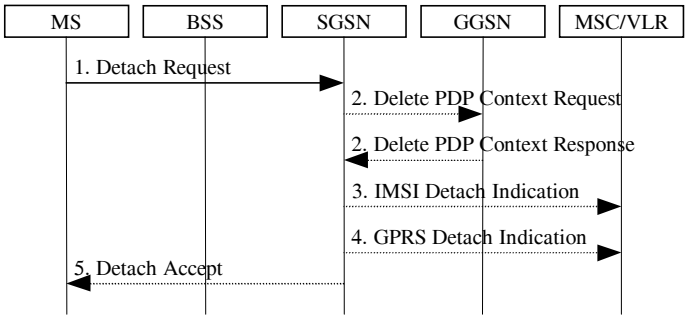




## 3.3 Network initiated Detach

- Why Network initiated Detach?
  - Network wants to "get rid of the MS" because of
    - Ill behaving mobile
    - Congested network
    - Immediate service termination (IST)
      - E.g., bills are not paid
    - To reload new parameters
      - Configuration has been changed and they should be taken into use
    - Any other reason





Patent Owner, Lemko Corp. - Ex. 2012, p. 15

## 3.3 Network initiated Detach

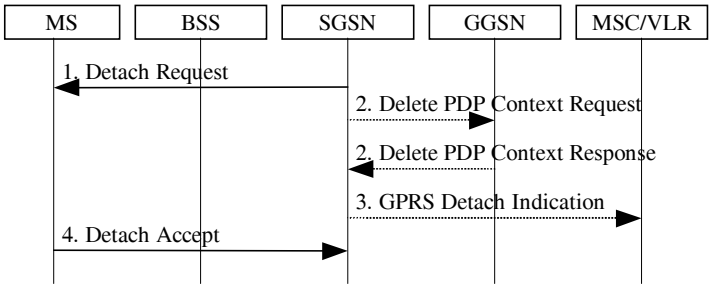




## 3.3 MS Purge

- Visited network informs home network removal of the MS's information

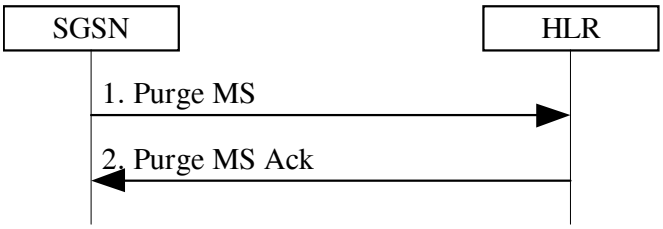






Patent Owner, Lemko Corp. - Ex. 2012, p. 16

## 3.4 Security functions

- Authentication
- P-TMSI signature
- P-TMSI reallocation
- Scope of ciphering



## 3.4.1 Security function: Authentication

- Authentication procedure's goal
  - Network wants to verify the real identity of the MS
  - Network allocates a temporary identity for the MS
    - To hide MS's real identity, like in GSM
  - As a side product, ciphering key is generated in MS
    - Network has the key already





Patent Owner, Lemko Corp. - Ex. 2012, p. 17

## 3.4.1 Security function: Authentication

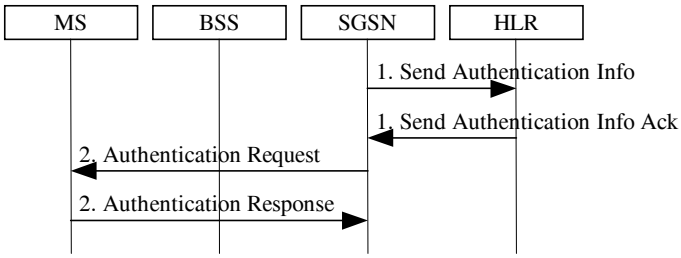




## 3.4.2 Security function: P-TMSI reallocation

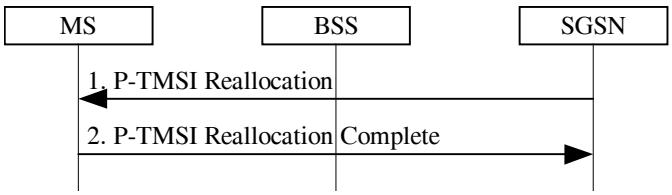






Patent Owner, Lemko Corp. - Ex. 2012, p. 18

## 3.4.3 Scope of the ciphering

- New ciphering range, why?
  - Due to the nature of GPRS traffic

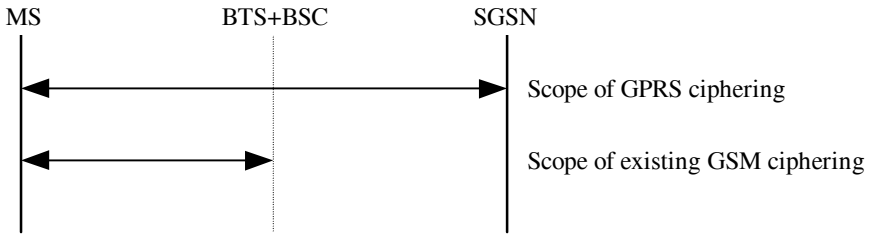




## 3.4.4 Security functions: Identity check

- MS has two types of identities
  - IMSI
    - The identity of the subscriber
    - Unique in the entire world
      - MCC=358
      - MNC=50
      - MSIN=1234567890
  - IMEI
    - The identity of the terminal
    - (Supposed to be) a unique id of the terminal
      - Manufacturer + serial number





Patent Owner, Lemko Corp. - Ex. 2012, p. 19

## 3.4.4 Security functions: Identity check

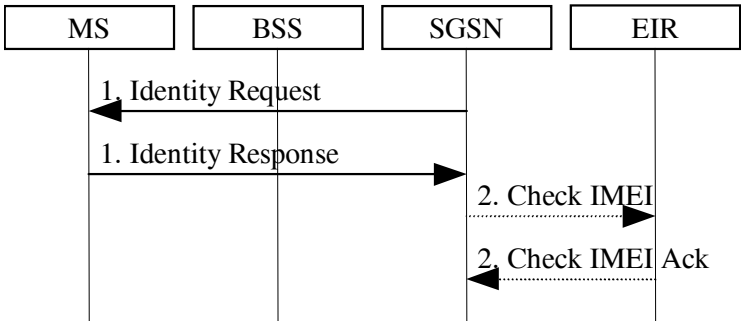




## 3.5 Location management functions

- Provides mechanisms for cell and PLMN selection
- Provides a mechanism for the network to know the Routeing Area for MSs in STANDBY and READY states
- Provides a mechanism for the network to know the cell identity for MSs in READY state
- Routeing Area Update, Combined Routeing Area and Location Area Update and Cell update procedures





Patent Owner, Lemko Corp. - Ex. 2012, p. 20

## 3.5 Location management functions

- How to select right function?
  - MS selects the new cell
  - MS compares the system information of previous and new cells
  - If the cells are in the same RA, then cell update may be needed
  - If cells are in different RAs, then RA Update is needed
  - If cells are in different LAs, then also RA is changed, then RA update is needed (and also LA update, if MS is using also conventional GSM services)



## 3.5.1 Location management: RA Update

- When MS changes RA
  - It tells to the network which (old RA) it came from
  - MS does not know if SGSN changes
    - Simple update, if same SGSN handles both RAs
    - If SGSN changes, then
      - Get MS's active information from the old SGSN
      - New SGSN needs to get user's subscription information from HLR
      - All GGSNs must be updated
      - Update also MSC/VLR (if using also conventional GSM services)





Patent Owner, Lemko Corp. - Ex. 2012, p. 21

# 3.5.1 Location management: RA Update

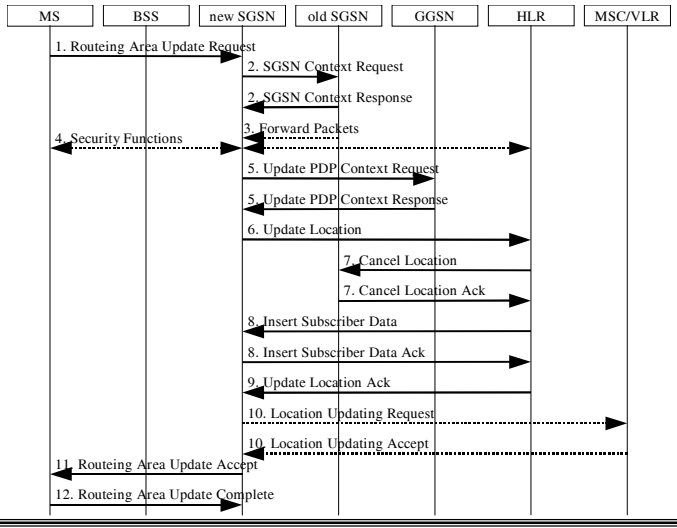




# 3.5.2 Location management: Combined RA/LA update

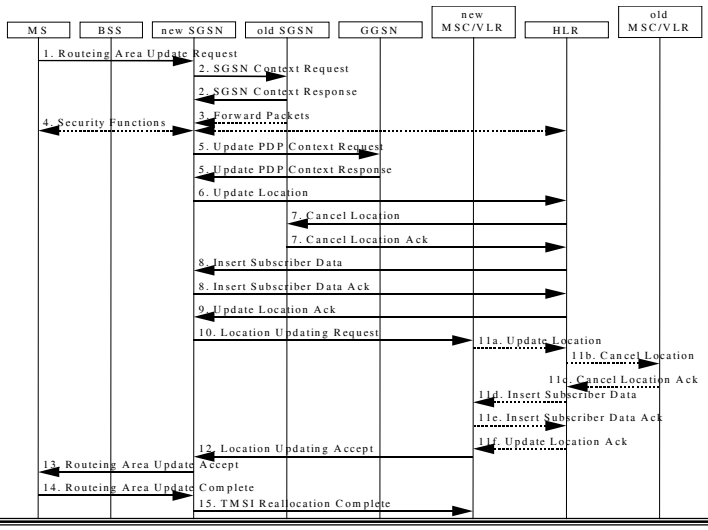






Patent Owner, Lemko Corp. - Ex. 2012, p. 22

## 3.5.3 Location management: Periodic RA/LA update

- If Gs exists:
  - RA update done periodically
  - No LA updates is done
- If no Gs:
  - RA update done periodically to SGSN
  - LA update done periodically if IMSI attached via A interface



## 3.5.4 Paging of GPRS MS

- Needed only when MS is in Standby
- MS is paged in the area where MS is know to be (one RA) to find out in which cell MS is currently located

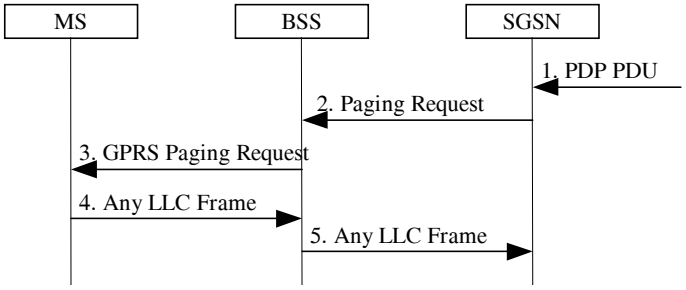






Patent Owner, Lemko Corp. - Ex. 2012, p. 23

## 4. GPRS session management

- 4.1 Non-anonymous vs. anonymous contexts
- 4.2 Addressing
- 4.3 PDP context activation
  - 4.3.1 MS initiated
  - 4.3.2 Network requested
  - 4.3.3 Network protection
- 4.4 Anonymous PDP context activation
- 4.5 PDP context modification
- 4.6 PDP context deactivation
- 4.7 Anonymous PDP context deactivation



## 4.1 Non-anonymous vs. anonymous PDP contexts

- Non-anonymous PDP context
  - MS must have a subscription for this
  - Network verifies that no unauthorized PDP context activation is done
  - Network knows who (i.e., which IMSI) holds each PDP context
  - No limitations on mobility (MS may move freely in the network)
- Anonymous PDP context
  - No subscription is needed, no need to attach first
  - Network does not know who uses the PDP context
  - Limited mobility (only within one RA)
- Both
  - Possible to send and receive data packets
  - Interface between PC and mobile is same





Patent Owner, Lemko Corp. - Ex. 2012, p. 24

## 4.2 PDP Addressing

- Static address:
  - the HPLMN operator assigns a PDP address permanently to the MS
- Dynamic address:
  - the HPLMN operator assigns a PDP address to the MS when a PDP context is activated
  - the VPLMN operator assigns a PDP address to the MS when a PDP context is activated
- Home operator makes the decision which of the above alternatives can used!



## 4.2 APN(GGSN) selection tree

- Access Point Name (APN) defines two things
  - the GGSN and (possible) external interface from the GGSN
- Static address:
  - Use APN defined in HLR
- Dynamic address:
  - If access point is defined in HLR
    - Use APN defined in HLR
  - else (dynamic address from VPLMN is allowed)
    - If user defined APN => Use APN defined by user
    - else if SGSN supports given protocol => use APN defined by SGSN
    - else tough luck, try again





Patent Owner, Lemko Corp. - Ex. 2012, p. 25

## 4.3.1 MS initiated PDP Context Activation

- MS informs the network that it wants to activate on PDP context
  - PDP type
  - PDP address (optional)
  - QoS parameters (optional)
  - Access point name (optional)
- SGSN checks that MS is allowed to activate the context. Also, SGSN fills/defines the missing (=optional) parameters
- SGSN selects GGSN to be used
- QoS negotiation
  - MS requests some QoS level (or default)
  - SGSN may downgrade the QoS (if it can't handle that high)
  - GGSN may downgrade even further



## 4.3.1 MS initiated PDP Context Activation

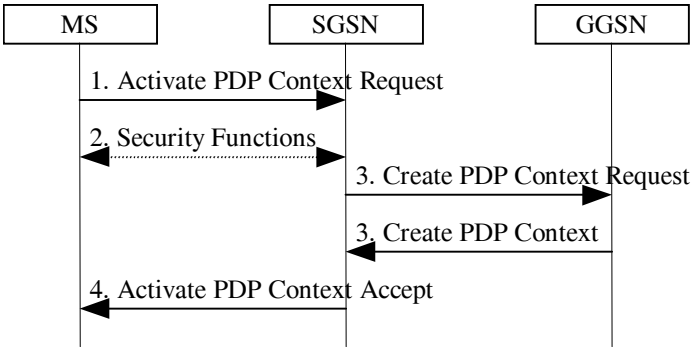






Patent Owner, Lemko Corp. - Ex. 2012, p. 26

## 4.3.2 Network requested PDP Context Activation

- If PDP context is not activated when the GPRS network (i.e., GGSN) gets a packet for that PDP context from an external network, as default, the GGSN shall drop the packet.
- However, a special arrangement can be used (this "NRPCA") where the network may ask the MS to activate the context
  - Similar idea like in MT circuit switched calls
- Network needs to have special storage in GGSN for this function
- **This function is VERY dangerous because it can kill the HLR!**

  => This is allowed only for very restricted access points, not for public (e.g., Internet) access points

  => Several "network protection functions" have been introduced because of this



## 4.3.2 Network requested PDP Context Activation

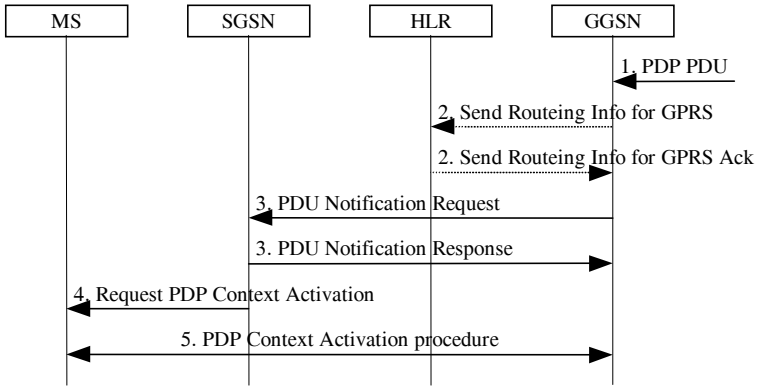






Patent Owner, Lemko Corp. - Ex. 2012, p. 27

## 4.3.3 Network requested PDP Context Activation: failure

- Possible errors
  - 'IMSI Not Known'
  - 'MS GPRS Detached'
  - 'MS Not GPRS Responding'
  - 'MS Refuses'
- load/network protection mechanisms may be activated



## 4.3.3 Network requested PDP Context Activation: Protection procedures

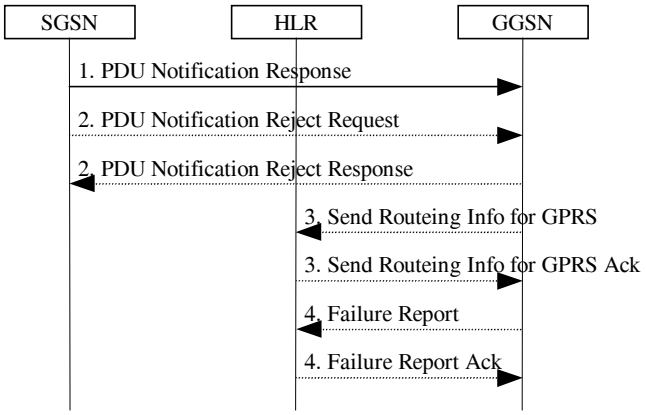






Patent Owner, Lemko Corp. - Ex. 2012, p. 28

## 4.3.3 Network requested PDP Context Activation: MS activity

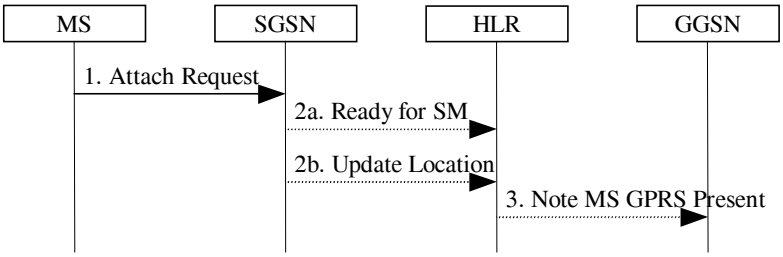




## 4.4 Anonymous PDP Context Activation

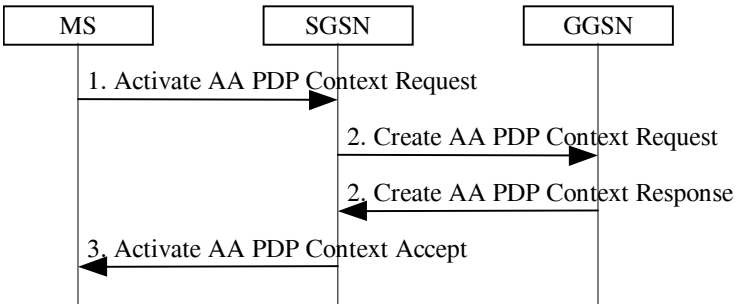






Patent Owner, Lemko Corp. - Ex. 2012, p. 29

## 4.5 PDP Context Modification

- PDP context is modified, when
  - Network can't anymore fulfill its promises to MS on QoS
  - Network has more resources and MS's QoS can be upgraded
- Only network may change the QoS
- MS initiated QoS renegotiation is coming in later phases of GPRS standard



## 4.5 PDP Context Modification

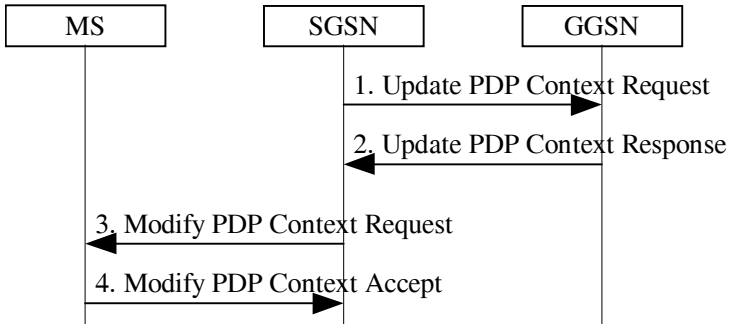






Patent Owner, Lemko Corp. - Ex. 2012, p. 30

## 4.6 PDP Context Deactivation

- PDP context can be deactivated by
  - MS
    - When user doesn't need the PDP context anymore
  - Network
    - When network wishes to "get rid" of the context due to
      - network congestion
      - user does not pay the bill
      - …
- After context deactivation, no data transfer is anymore possible



## 4.6.1 MS initiated PDP Context Deactivation

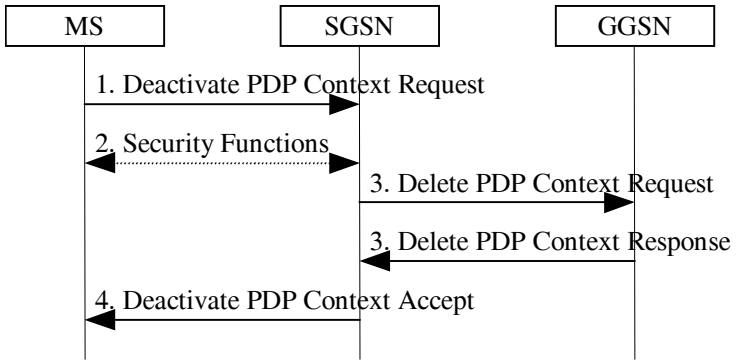






Patent Owner, Lemko Corp. - Ex. 2012, p. 31

## 4.6.2 Network initiated PDP Context Deactivation

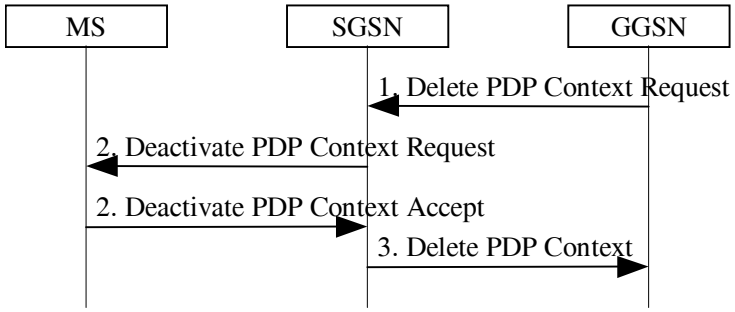




## 4.7 Anonymous PDP Context Deactivation

- MS
  - MS does not need to do anything (deactivation is done when Ready timer expires)
- SGSN
  - SGSN may deactivate the context for same reasons as non-anonymous case
- GGSN
  - GGSN may deactivate the context when it detects malicious usage of the service





Patent Owner, Lemko Corp. - Ex. 2012, p. 32

## 4.7 SGSN initiated Anonymous PDP Context Deactivation

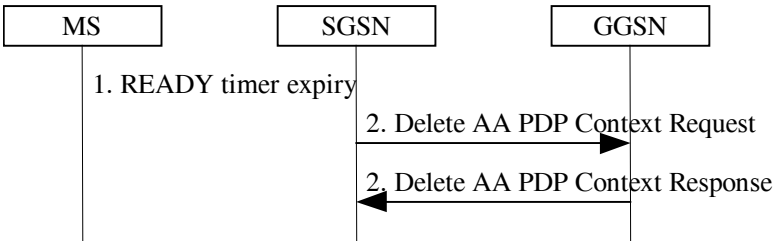




## 4.7 GGSN initiated Anonymous PDP Context Deactivation

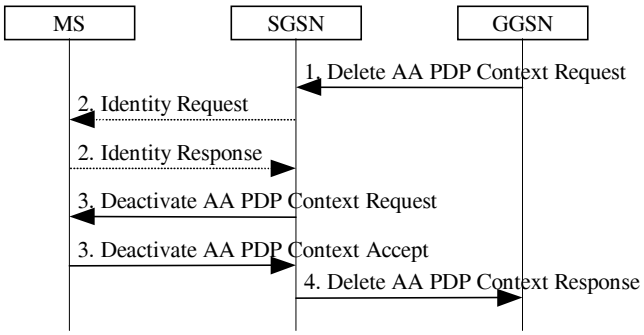






Patent Owner, Lemko Corp. - Ex. 2012, p. 33

# 5. GPRS data transfer

- 5.1 MS to/from fixed network data transfer
- 5.2 MS to MS data transfer



# 5.1 MS to/from fixed network data transfer

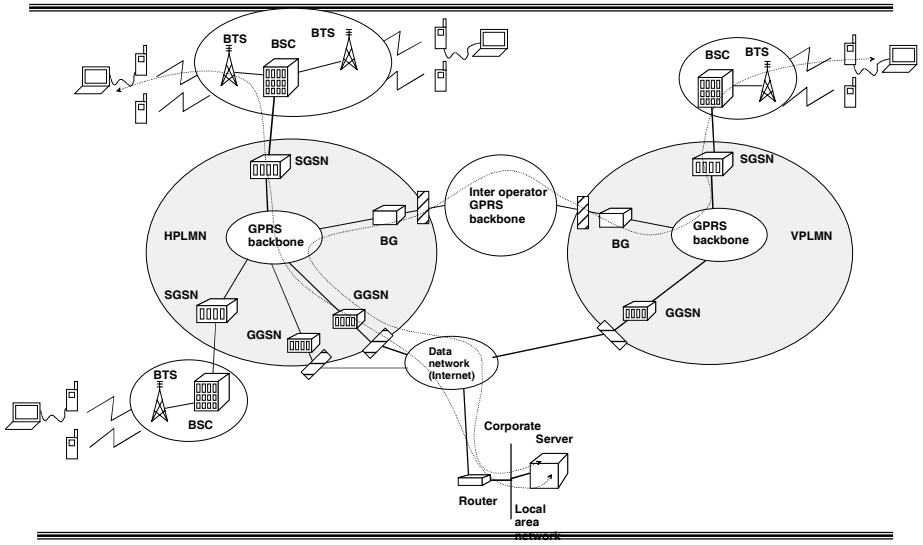






Patent Owner, Lemko Corp. - Ex. 2012, p. 34

## 5.2 MS to MS data transfer

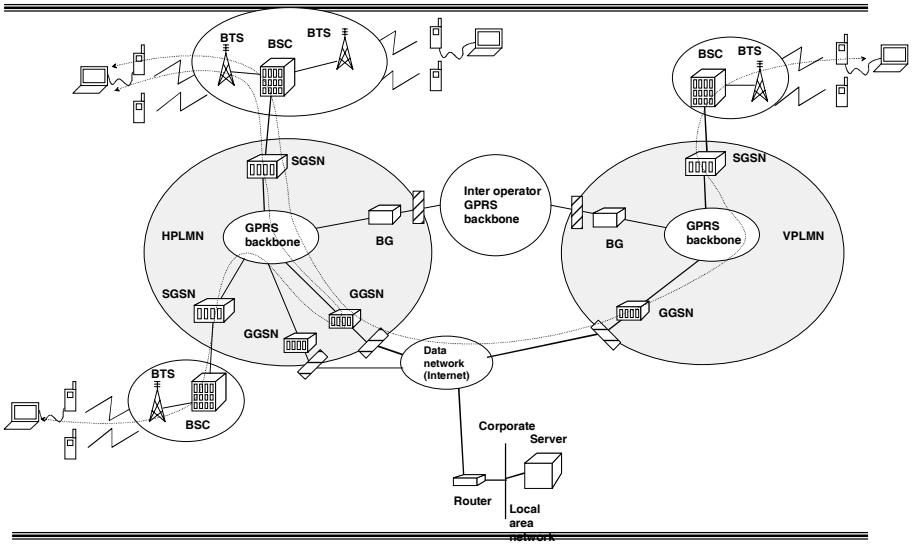




## 6. Information storage

- 6.1 HLR
- 6.2 SGSN
- 6.3 GGSN
- 6.4 MS
- 6.5 MSC/VLR
- 6.6 GPRS identities





Patent Owner, Lemko Corp. - Ex. 2012, p. 35

# 6. Information storage

- HLR
  - Main storage
- SGSN
  - Temporary storage
  - Active PDP contexts and used GGSNs
  - Location of the MS
- GGSN
  - Active PDP contexts
  - Location of the MS in accuracy of SGSN
- MS
  - Active PDP contexts
  - Location of the MS



# 6.1 HLR Subscription data

**Table 1: HLR GPRS Subscription Data**

| Field | Description |
|---|---|
| IMSI | IMSI is the main reference key. |
| MSISDN | MSISDN of the MS for SMS. |
| SGSN Number | The SS7 address of the SGSN currently serving this MS. |
| SGSN Address | The IP address of the SGSN currently serving this MS. |
| SMS Parameters | SMS-related parameters, e.g., operator-determined barring. |
| MS Purged for GPRS | Indicates that the MM and PDP contexts of the MS are deleted from the SGSN. |
| MNRG | Indicates that the MS is not reachable through an SGSN, and that the MS is marked as not reachable for GPRS at the SGSN and possibly at the GGSN. |
| GGSN-list | The GSN number and optional IP address pair related to the GGSN that shall be contacted when activity from the MS is detected and MNRG is set. The GSN number shall be either the number of the GGSN or the protocol-converting GSN as described in the subclauses "MAP-based GGSN - HLR Signalling" and "GTP and MAP-based GGSN - HLR Signalling". |
| Each IMSI contains zero or more of the following PDP context subscription records: | |
| PDP Type | PDP type, e.g., X.25 or IP. |
| PDP Address | PDP address, e.g., an X.121 address. This field shall be empty if dynamic addressing is allowed. |
| QoS Profile Subscribed | The quality of service profile subscribed for this PDP context. QoS Profile Subscribed is the default level if a particular QoS profile is not requested. |
| VPLMN Address Allowed | Specifies whether the MS is allowed to use the APN in the domain of the HPLMN only, or additionally the APN in the domain of the VPLMN. |
| Access Point Name | A label according to DNS naming conventions describing the access point to the external packet data network. |





Patent Owner, Lemko Corp. - Ex. 2012, p. 36

# 6.2 SGSN non-anonymous MM context

**Table 1: SGSN MM and PDP Contexts**

| Field | Description |
|---|---|
| IMSI | IMSI is the main reference key. |
| MM State | Mobility management state, IDLE, STANDBY, or READY. |
| P-TMSI | Packet Temporary Mobile Subscriber Identity. |
| IMEI | International Mobile Equipment Identity |
| P-TMSI Signature | A signature used for identification checking purposes. |
| Routeing Area | Current routeing area. |
| Cell Identity | Current cell, only valid in READY state. |
| VLR Number | The VLR number of the MSC/VLR currently serving this MS. |
| New SGSN Address | The IP address of the new SGSN where buffered and not sent N-PDUs should be forwarded to. |
| Authentication Triplets | Authentication and ciphering parameters. |
| Kc | Currently used ciphering key. |
| CKSN | Ciphering key sequence number of Kc. |
| Ciphering algorithm | Selected ciphering algorithm. |
| Classmark | MS classmark. |
| DRX Parameters | Discontinuous reception parameters. |
| MNRG | Indicates whether activity from the MS shall be reported to the HLR. |
| NGAF | Indicates whether activity from the MS shall be reported to the MSC/VLR. |
| MSISDN | MSISDN of the MS for SMS. |
| SMS Parameters | SMS-related parameters, e.g., operator-determined barring. |
| Recovery | Indicates if HLR or VLR is performing database recovery. |



# 6.2 SGSN non-anonymous PDP Context

**Table 1: SGSN MM and PDP Contexts**

| Field | Description |
|---|---|
| Each MM context contains zero or more of the following PDP contexts: | |
| PDP Type | PDP type, e.g., X.25 or IP. |
| PDP Address | PDP address, e.g., an X.121 address. |
| NSAPI | Network layer Service Access Point Identifier. |
| PDP State | Packet data protocol state, INACTIVE or ACTIVE. |
| Access Point Name | The APN requested by the MS. |
| GGSN Address in Use | The IP address of the GGSN currently used by the activated PDP context. |
| VPLMN Address Allowed | Specifies whether the MS is allowed to use the APN in the domain of the HPLMN only, or additionally the APN in the domain of the VPLMN. |
| Compression | Negotiated data compression parameters. |
| QoS Profile Subscribed | The quality of service profile subscribed for this PDP context. |
| QoS Profile Requested | The quality of service profile requested upon PDP Context Activation. |
| QoS Profile Negotiated | The quality of service profile negotiated for this PDP context. |
| SND | GTP sequence number of the next downlink N-PDU to be sent to the MS, only for connection-oriented PDP types. |
| SNU | GTP sequence number of the next uplink N-PDU to be sent to the GGSN, only for connection-oriented PDP types. |
| Reordering Required | Specifies whether the SGSN shall reorder N-PDUs before delivering the N-PDUs to the MS. |





Patent Owner, Lemko Corp. - Ex. 2012, p. 37

# 6.2 SGSN anonymous MM and PDP contexts

**Table 1: SGSN MM and PDP Contexts for Anonymous Access**

| Field | Description |
|---|---|
| Random TLLI | Random Temporary Logical Link Identity. |
| TID | Tunnel Identifier. |
| Routeing Area | Current routeing area. |
| Cell Identity | Current cell. |
| PDP Type | PDP type, e.g., X.25 or IP. |
| PDP Address | PDP address, e.g., an X.121 address. |
| NSAPI | Network layer Service Access Point Identifier. |
| QoS Profile Negotiated | The quality of service profile negotiated for this PDP context. |
| GGSN Address in Use | The IP address of the GGSN currently used. |
| SND | GTP sequence number of the next downlink N-PDU to be sent to the MS. |
| SNU | GTP sequence number of the next uplink N-PDU to be sent to the GGSN. |



# 6.3 GGSN non-anonymous PDP context

**Table 1: GGSN PDP Context**

| Field | Description |
|---|---|
| IMSI | International Mobile Subscriber Identity. |
| NSAPI | Network layer Service Access Point Identifier. |
| PDP Type | PDP type, e.g., X.25 or IP. |
| PDP Address | PDP address, e.g., an X.121 address. |
| Dynamic Address | Indicates whether PDP Address is static or dynamic. |
| QoS Profile Negotiated | The quality of service profile negotiated for this PDP context. |
| SGSN Address | The IP address of the SGSN currently serving this MS. |
| Access Point Name | The APN requested by the MS. |
| MNRG | Indicates whether the MS is marked as not reachable GPRS at the HLR. |
| Recovery | Indicates if the SGSN is performing database recovery. |
| SND | GTP sequence number of the next downlink N-PDU to be sent to the MS, only for connection-oriented PDP types |
| SNU | GTP sequence number of the next uplink N-PDU to be received from the SGSN, only for connection-oriented PDP types |
| Reordering Required | Specifies whether the GGSN shall reorder N-PDUs received from the SGSN. |





Patent Owner, Lemko Corp. - Ex. 2012, p. 38

# 6.3 GGSN anonymous PDP context

**Table 1: GGSN PDP Context for Anonymous Access**

| Field | Description |
|---|---|
| TID | Tunnel Identifier. |
| PDP Type | PDP type, e.g., X.25 or IP. |
| QoS Profile Negotiated | The quality of service profile negotiated for this PDP context. |
| QoS Negotiated | The quality of service negotiated for this PDP context, 4 levels. |
| SGSN Address | The IP address of the SGSN serving this MS. |
| Access Point Name | The APN requested by the MS. |



# 6.4 MS non-anonymous MM and PDP contexts

**Table 1: MS MM and PDP Contexts**

| Field | Description |
|---|---|
| MM State | Mobility management state, IDLE, STANDBY, or READY. |
| P-TMSI | Packet Temporary Mobile Subscriber Identity. |
| P-TMSI Signature | A signature used for identification checking purposes. |
| Routeing Area | Current routeing area. |
| Cell Identity | Current cell. |
| Channel Id | Current physical channel. |
| Kc | Currently used ciphering key. |
| CKSN | Ciphering key sequence number of Kc. |
| Ciphering algorithm | Selected ciphering algorithm. |
| Classmark | MS classmark. |
| DRX Parameters | Discontinuous reception parameters. |
| Each MM context contains zero or more of the following PDP contexts: | |
| PDP Type | PDP type, e.g., X.25 or IP. |
| PDP Address | PDP address, e.g., an X.121 address. |
| PDP State | Packet data protocol state, INACTIVE or ACTIVE. |
| Dynamic Address Allowed | Specifies whether the MS is allowed to use a dynamic address. |
| NSAPI | Network layer Service Access Point Identifier. |
| Compression | Negotiated data compression parameters. |
| QoS Profile Requested | The quality of service profile requested for this PDP context. |
| QoS Profile Negotiated | The quality of service profile negotiated for this PDP context |





Patent Owner, Lemko Corp. - Ex. 2012, p. 39

# 6.4 MS anonymous MM and PDP contexts

**Table 1: MS MM and PDP Contexts for Anonymous Access**

| Field | Description |
|---|---|
| Random TLLI | Random Temporary Logical Link Identity. |
| Routeing Area | Current routeing area. |
| Cell Identity | Current cell. |
| Channel Id | Current physical channel. |
| PDP Type | PDP type, e.g., X.25 or IP. |
| PDP Address | PDP address, e.g., an X.121 address. |
| NSAPI | Network layer Service Access Point Identifier. |
| QoS Profile Requested | The quality of service profile requested for this PDP context. |
| QoS Profile Negotiated | The quality of service profile negotiated for this PDP context. |



# 6.5 MSC/VLR context

**Table 1: MSC/VLR Association**

| Field | Description |
|---|---|
| IMSI | IMSI is the main reference key. |
| SGSN Number | The SGSN number of the SGSN currently serving this MS. |

## 6.6 GPRS Identities

- IMSI
- P-TMSI (Packet Temporary Mobile Subscriber Identity
- Temporary Logical Link Identity (TLLI)
  - Local TLLI (Derived from P-TMSI), Random TLLI (generated by MS), Foreign TLLI (Derived from Local TLLI)
- Network layer Service Access Point Identifier (NSAPI)
- Tunneling Identity (TID) (=IMSI+NSAPI)
- PDP address (IPv4, IPv6, X.25, ...)
- Routeing Area Identity (RAI)
  - RAI = MCC + MNC + LAC + RAC
- GSN addresses
  - GSN number (SS7 network), GSN address (IP address/logical name)
- Access Point Name (APN)
  - Logical (DNS) name of GGSN+ route to external network



## 6.6 GPRS Identities

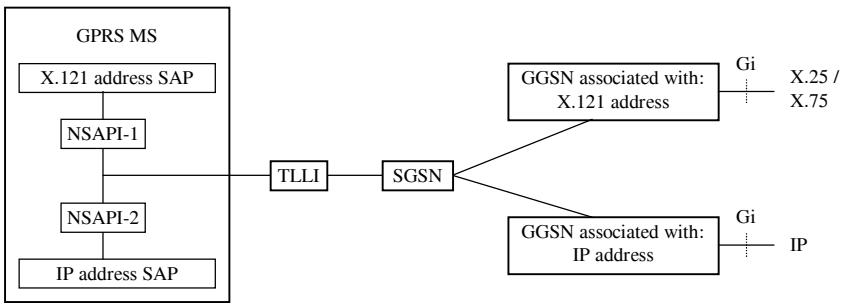






Patent Owner, Lemko Corp. - Ex. 2012, p. 41

## 7. Interaction with other GSM services

- 7.1 SGSN-MSC/VLR interaction
- 7.2 SGSN-MSC/VLR association
- 7.3 SMS support in GPRS
- 7.4 MS SMS
- 7.5 MO SMS
- 7.6 CS services
- 7.7 CS paging
- 7.8 SS services



## 7.1 SGSN - MSC/VLR interaction

- IMSI attach and detach via SGSN
- Co-ordination of LA Update and RA Update
- Paging for a CS connection via the SGSN.
- Support of alert procedures for non-GPRS services.
- Suspend and resume for class-B MSs.
  (This is under development/evolution: Suspend/Resume via BSS)





Patent Owner, Lemko Corp. - Ex. 2012, p. 42

## 7.2 SGSN-MSC/VLR association

- Association is created/updated when
  - At IMSI attach when the MS is already GPRS-attached
  - At GPRS attach when the MS is already IMSI-attached, but not CS-connected
  - At combined IMSI / GPRS attach
  - At combined RA / LA update, if an association does not already exist.
  - When SGSN is changed
  - When MSC/VLR is changed



## 7.3 SMS support in GPRS

- GPRS supports both MO and MT SMSs
  - Similar functionality as in conventional GSM side
    - Except no means to use SMS related supplementary services (they must be done via conventional GSM)
  - Same SMS Service Centers are used
  - GPRS mobile can use alternatively conventional GSM channels to carry SMSs





Patent Owner, Lemko Corp. - Ex. 2012, p. 43

# 7.3 SMS support: MT SMS

```
MS   BSS  SGSN  GGSN MSC/VLR HLR  SMS-G SM-SC
|    |    |     |    |     |    |     |
|    |    |     |    |     |    |<----| Message Transfer                          1
|    |    |     |    |     |    |     |    (SM, MS Address)
|    |    |     |    |     |<----|     | Send Routeing Info For Short Message      2
|    |    |     |    |     |---->|     | Send Routeing Info For Short Message Res  3
|    |    |     |    |     |    |     |    (SGSN Number, MSC Number)
|    |    |<----|-----|-----|-----|     | Forward Short Message                     4
|    |    |     |    |     |    |     |    (SM)
|<----|---->|     |    |     |    |     | Message Transfer                          5
|    |    |     |    |     |    |     |    (SM)
|    |    |-----|-----|-----|---->|     | Forward Short Message Result              6
|    |    |     |    |     |    |---->| Delivery Report                           7
|    |    |     |    |     |    |     |
```



# 7.4 SMS support: MT SMS

```
MS   BSS  SGSN  GGSN MSC/VLR HLR  SMS-G SM-SC
|    |    |     |    |     |    |     |
|    |    |     |    |     |    |<----| Message Transfer                          1
|    |    |     |    |     |    |     |    (SM, MS Address)
|    |    |     |    |     |<----|     | Send Routeing Info For Short Message      2
|    |    |     |    |     |---->|     | Send Routeing Info For Short Message Res  3
|    |    |     |    |     |    |     |    (SGSN Number, MSC Number)
|    |    |<----|-----|-----|-----|     | Forward Short Message                     4
|    |    |     |    |     |    |     |    (SM)
|<----|---->|     |    |     |    |     | Message Transfer: Failure                 5
|    |    |     |    |     |    |     |    (SM)
|    |    |-----|-----|-----|---->|     | Forward Short Message Result              6
|    |    |     |    |<----|-----|     | Forward Short Message                     7
|    |    |     |    |     |    |     |    (SM)
|<----|-----|-----|---->|     |    |     | Message Transfer: Failure                 8
|    |    |     |    |     |    |     |    (SM)
|    |    |<----|-----|     |    |     | Alert Request                             9
|    |    |     |    |-----|---->|     | Forward Short Message Result              10
|    |    |     |    |     |<----|     | Report SM Delivery Status                 11
|    |    |     |    |     |---->|     | Report SM Delivery Status Result          12
|    |    |     |    |     |    |---->| Failure Report                            13
|    |    |     |    |     |    |     |
```

# 7.5 SMS support: MO SMS

```
MS   BSS  SGSN  GGSN MSC/VLR HLR SMS-IW SM-SC
|    |    |     |    |      |   |     |
|<---|---->|     |    |      |   |     | Message Transfer
|    |    |     |    |      |   |     |    (SM)
|    |    |-----|-----|-----|---->|     | Forward Short Message
|    |    |     |    |      |   |     |    (SM)
|    |    |     |    |      |   |----> | Message Transfer
|    |    |     |    |      |   |     |    (SM)
|    |    |     |    |      |   |<---- | Delivery Report
|    |    |<----|-----|-----|-----|     | Forward Short Message Result
|    |    |     |    |      |   |     |
|<---|-----|     |    |      |   |     | Delivery Report
|    |    |     |    |      |   |     |
```



# 7.6 CS services

- This is old classification of the mobiles!
  - Similar functionality also in the new classification
- Support of CS services depends on the MS class
  - Class A: full simultaneous support
  - Class B: restricted simultaneous support
  - Class C: no simultaneous support





Patent Owner, Lemko Corp. - Ex. 2012, p. 45

## 7.7 CS paging

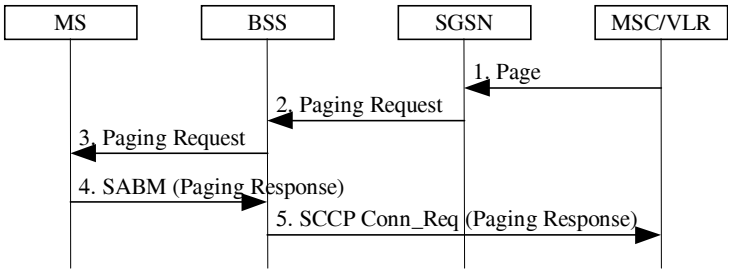




## 7.8 Supplementary services

- Possibly supported SS in phase 1
  - Call Forwarding Unconditional (CFU)
    - X.25 supports this externally
  - Call Forwarding on Mobile Subscriber Not Reachable (CFNRc)
    - X.25 supports this externally
  - Closed User Group (CUG)
    - X.25 supports this externally
  - Advice of Charge - Information (AoCI)
    - Not in phase 1
  - Advice of Charge - Charging (AoCC)
    - Not in phase 1





Patent Owner, Lemko Corp. - Ex. 2012, p. 46

## 8. Detailed GPRS functions

- 8.1 Message screening
- 8.2 Charging
- 8.3 QoS profile



## 8.1 Message screening functionalities

- Network-controlled screening
  - This is used to protect the GPRS network from known security problems. The same screening applies for all MS users
- Subscription-controlled screening
  - This is based on the subscription and is subject to agreement between the subscriber and the operator
  - Not included in the Phase one of GPRS (but can be used)
- User-controlled screening
  - This is very complicated
  - Not supported in Phase one of GPRS





Patent Owner, Lemko Corp. - Ex. 2012, p. 47

## 8.2 Charging issues

- Billing from charging information is operator specific
  - Flat rate shall be possible, each operator handles own charging
- PTP charging principles: SGSN handles radio issues
  - usage of the radio interface
    amount of data transmitted in MO and MT directions categorised with QoS and user protocols
  - usage of the packet data protocol addresses
    how long the MS has used the packet data protocol addresses
  - usage of the general GPRS resources
    usage of other GPRS-related resources and the MS's GPRS network activity
  - location of MS: HPLMN, VPLMN, plus optional higher-accuracy location information



## 8.2 Charging issues

- PTP: GGSN handles external network issues
  - destination and source
    the destination and source addresses with a level of accuracy as defined by the GPRS operator
  - usage of the external data networks
    amount of data sent and received to and from the external data network
  - usage of the packet data protocol addresses
    how long the MS has used the PDP addresses
  - location of MS: HPLMN, VPLMN, plus optional higher-accuracy location information
- Possibility to have reverse charging





Patent Owner, Lemko Corp. - Ex. 2012, p. 48

## 8.3 QoS profile

- Precedence class
- Delay class
- Reliability class
- Peak throughput class
- Mean throughput class



## 8.3.1 QoS profile: Precedence class

**Table 1: Precedence Classes**

| Precedence | Precedence Name | Interpretation |
|---|---|---|
| 1 | High priority | Service commitments shall be maintained ahead of precedence classes 2 and 3. |
| 2 | Normal priority | Service commitments shall be maintained ahead of precedence class 3. |
| 3 | Low priority | Service commitments shall be maintained after precedence classes 1 and 2. |





Patent Owner, Lemko Corp. - Ex. 2012, p. 49

## 8.3.2 QoS profile: Delay class

**Table 4: Delay classes**

| Delay Class | Packet size | | | |
|---|---|---|---|---|
| | 128 octets | | 1024 octets | |
| | Mean Transfer Delay (sec) | 95 percentile Delay (sec) | Mean Transfer Delay (sec) | 95 percentile Delay (sec) |
| 1. (Predictive) | 0.5 | 1.5 | 2 | 7 |
| 2. (Predictive) | 5 | 25 | 15 | 75 |
| 3. (Predictive) | 50 | 250 | 75 | 375 |
| 4. (Best Effort) | Unspecified | | | |



## 8.3.3 QoS profile: Reliability class

- Probability of data loss
- Probability of data delivered out of sequence
- Probability of duplicate data delivery
- Probability of corrupted data





Patent Owner, Lemko Corp. - Ex. 2012, p. 50

# 8.3.3 QoS profile: Reliability class

**Table 1: Reliability Classes**

| Reliability Class | GTP Mode | LLC Frame Mode | LLC Data Protection | RLC Block Mode | Traffic Type |
|---|---|---|---|---|---|
| 1 | Acknowledged | Acknowledged | Protected | Acknowledged | Non real-time traffic, error-sensitive application that cannot cope with data loss. |
| 2 | Unacknowledged | Acknowledged | Protected | Acknowledged | Non real-time traffic, error-sensitive application that can cope with infrequent data loss or out-of-sequence delivery. |
| 3 | Unacknowledged | Unacknowledged | Protected | Acknowledged | Non real-time traffic, error-sensitive application that can cope with data loss, GMM/SM, and SMS. |
| 4 | Unacknowledged | Unacknowledged | Protected | Unacknowledged | Real-time traffic, error-sensitive application that can cope with data loss or out-of-sequence delivery. |
| 5 | Unacknowledged | Unacknowledged | Unprotected | Unacknowledged | Real-time traffic, error non-sensitive application that can cope with data loss. |

The Reordering Required field in the SGSN and GGSN PDP context tables shall be set to "on" when reliability class is set to 1. Reordering Required shall be set to "off" when reliability class is set to 4 or 5. When reliability class is set to 2 or 3, the setting of Reordering Required shall be determined by the GGSN.

NOTE: For real-time traffic, the QoS profile also requires appropriate settings for delay and throughput.



# 8.3.4 QoS profile: Peak throughput class

**Table 1: Peak Throughput Classes**

| Peak Throughput Class | Peak Throughput in octets per second |
|---|---|
| 1 | Up to 1 000 (8 kbit/s). |
| 2 | Up to 2 000 (16 kbit/s). |
| 3 | Up to 4 000 (32 kbit/s). |
| 4 | Up to 8 000 (64 kbit/s). |
| 5 | Up to 16 000 (128 kbit/s). |
| 6 | Up to 32 000 (256 kbit/s). |
| 7 | Up to 64 000 (512 kbit/s). |
| 8 | Up to 128 000 (1 024 kbit/s). |
| 9 | Up to 256 000 (2 048 kbit/s). |





Patent Owner, Lemko Corp. - Ex. 2012, p. 51

# 8.3.5 QoS profile: Mean throughput class

**Table 1: Mean Throughput Classes**

| Mean Throughput Class | Mean Throughput in octets per hour |
|---|---|
| 1 | Best effort. |
| 2 | 100 (~0.22 bit/s). |
| 3 | 200 (~0.44 bit/s). |
| 4 | 500 (~1.11 bit/s). |
| 5 | 1 000 (~2.2 bit/s). |
| 6 | 2 000 (~4.4 bit/s). |
| 7 | 5 000 (~11.1 bit/s). |
| 8 | 10 000 (~22 bit/s). |
| 9 | 20 000 (~44 bit/s). |
| 10 | 50 000 (~111 bit/s). |
| 11 | 100 000 (~0.22 kbit/s). |
| 12 | 200 000 (~0.44 kbit/s). |
| 13 | 500 000 (~1.11 kbit/s). |
| 14 | 1 000 000 (~2.2 kbit/s). |
| 15 | 2 000 000 (~4.4 kbit/s). |
| 16 | 5 000 000 (~11.1 kbit/s). |
| 17 | 10 000 000 (~22 kbit/s). |
| 18 | 20 000 000 (~44 kbit/s). |
| 19 | 50 000 000 (~111 kbit/s). |



# 9. Summary

- GSM 03.60 describes the general architecture of GPRS
- Two new network elements are introduced:
  - SGSN and GGSN
  - Also GPRS backbone network and border gateways are new
  - Backbone is based on IP network
- GPRS architecture provides means to
  - handle mobility management
  - activate/deactivate PDP contexts
  - transfer user data
  - support interaction with other GSM services (CS, SMS)





Patent Owner, Lemko Corp. - Ex. 2012, p. 52

# GPRS interfaces

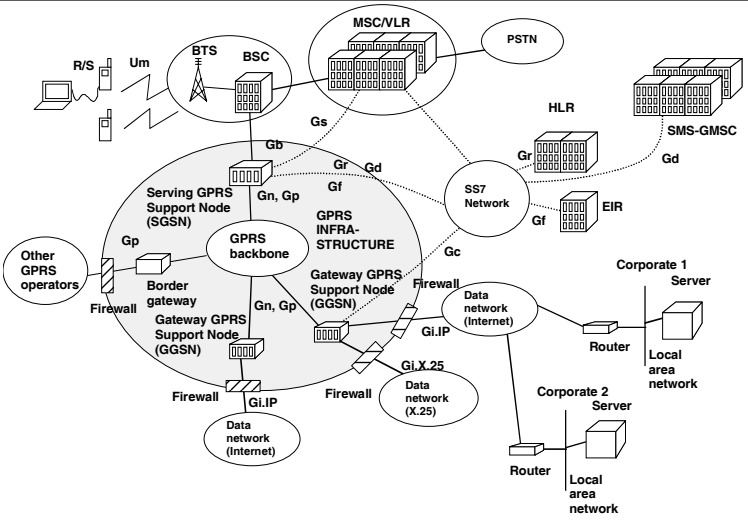




# Two GPRS operators

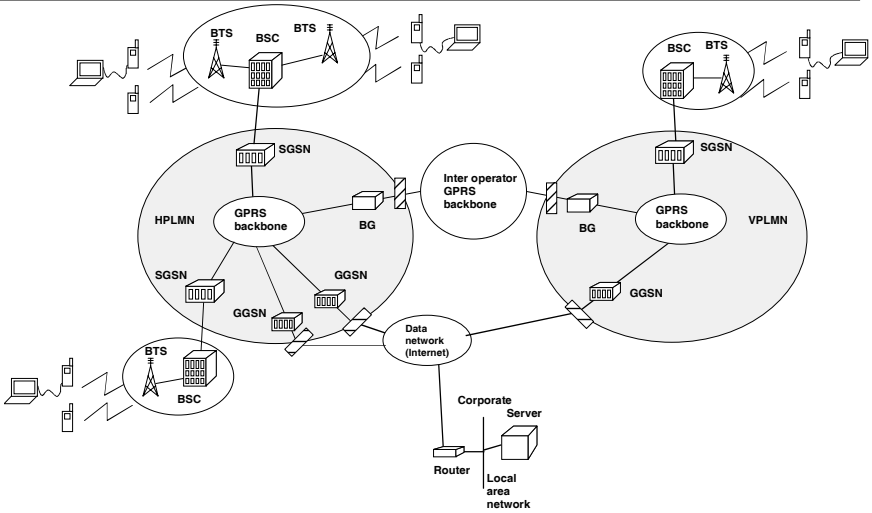






Patent Owner, Lemko Corp. - Ex. 2012, p. 53

# GPRS data transfer, MT or MO

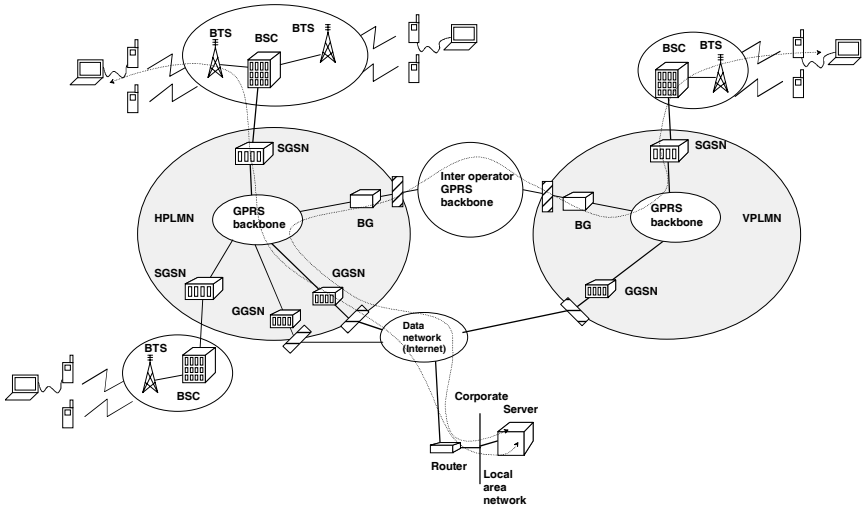




# GPRS data transfer, MS-MS

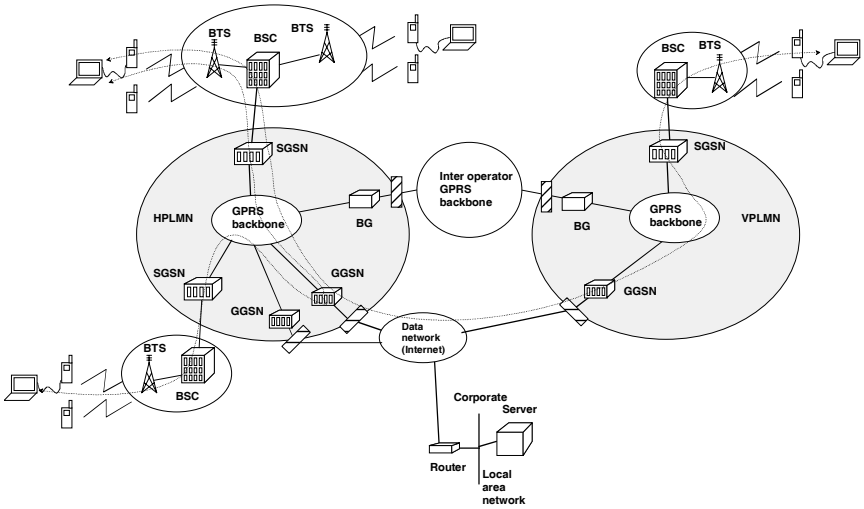






Patent Owner, Lemko Corp. - Ex. 2012, p. 54