UNITED STATES PATENT AND TRADEMARK OFFICE

BEFORE THE PATENT TRIAL AND APPEAL BOARD

HUM INDUSTRIAL TECHNOLOGY, INC.
Petitioner

v.

AMSTED RAIL COMPANY, INC.
Patent Owner

Patent No. 9,365,223
Issue Date: June 14, 2016
Title: SYSTEM AND METHOD FOR MONITORING RAILCAR PERFORMANCE

Inter Partes Review No. IPR2023-00538

PETITION FOR *INTER PARTES* REVIEW OF U.S. PATENT NO. 9,365,223 UNDER 35 U.S.C. §§ 311-319 AND 37 C.F.R. § 42

TABLE OF CONTENTS

Page

TABLE OF CONTENTS I
TABLE OF AUTHORITIES VIII
EXHIBIT INDEX X
LISTING OF CLAIMS XI
I. FORMALITIES 1
A. Mandatory Notices (37 C.F.R. § 42.8(a)(1)) 1
1. Real Party in Interest (37 C.F.R. § 42.8(b)(1)) 1
2. Designation of Lead and Backup Counsel (37 C.F.R. § 42.8(b)(3)) 1
3. Notice of Service (37 C.F.R. § 42.8(b)(4)) 2
4. Related Proceedings (37 C.F.R. § 42.8(b)(2)) 2
B. Grounds for Standing (37 C.F.R. § 42.104(a)) 2
C. Procedural Statements 3
II. INTRODUCTION 3
III. STATEMENT OF THE PRECISE RELIEF REQUESTED AND THE REASONS THEREFOR (37 C.F.R. § 42.22(A)) 4
IV. U.S. PATENT NO. 9,365,223 ("THE '223 PATENT") (EX1001) 6
V. BACKGROUND OF RAILCAR MONITORING SYSTEMS AND THE PRIOR ART RELIED UPON IN THIS PETITION 9
1. LeFebvre 9
2. Armitage 10
3. Barone 12
4. Denny 13
5. Provasnik 14
VI. A PERSON HAVING ORDINARY SKILL IN THE ART 14
VII. CLAIM CONSTRUCTION UNDER 37 C.F.R. § 42.104(B)(3) 15
VIII. DISCRETION UNDER § 325(D) 16
IX. DISCRETION UNDER § 314(A) 17

X. GROUNDS FOR UNPATENTABILITY 18
A. Ground 1: Claims 2–10, 18, 20, 21, 23, and 25–32 are unpatentable under 35 U.S.C. § 103(a) over LeFebvre. 18
1. Independent Claim 2 19
a. Claim 2 Preamble 19
b. Limitation 2(a) 19
c. Limitation 2(b) 21
d. Limitation 2(c) 21
e. Limitation 2(d) 22
f. Limitation 2(e) 23
g. Limitation 2(f) 24
h. Limitation 2(g) 24
i. Limitation 2(h) 25
2. Dependent Claim 3 27
3. Dependent Claim 4 29
4. Independent Claim 5 30
a. Claim 5 Preamble 30
b. Limitation 5(a) 30
c. Limitation 5(b) 30
d. Limitation 5(c) 30
e. Limitation 5(d) 30
f. Limitation 5(e) 30
g. Limitation 5(f) 31
h. Limitation 5(g) 31
i. Limitation 5(h) 31
j. Limitation 5(i) 31
k. Limitation 5(j) 31
l. Limitation 5(k) 31
5. Dependent Claim 6 32
6. Dependent Claim 7 33

7. Dependent Claim 8 33
a. Limitation 8(a).....33
b. Limitation 8(b) 34
8. Dependent Claim 9 35
a. Limitation 9(a).....35
b. Limitation 9(b) 35
c. Limitation 9(c).....35
9. Dependent Claim 10 35
10. Dependent Claim 18 36
11. Dependent Claim 20 36
12. Dependent Claim 21 37
13. Independent Claim 23 38
a. Claim 23 Preamble 38
b. Limitation 23(a).....38
c. Limitation 23(b) 38
d. Limitation 23(c).....38
e. Limitation 23(d) 38
f. Limitation 23(e).....38
g. Limitation 23(f) 38
14. Dependent Claim 25 39
15. Dependent Claim 26 39
a. Limitation 26(a).....39
b. Limitation 26(b) 39
c. Limitation 26(c).....39
16. Dependent Claim 27 39
a. Limitation 27(a).....39
b. Limitation 27(b) 39
17. Dependent Claim 28 40
18. Dependent Claim 29 41
19. Dependent Claim 30 41

20. Dependent Claim 31 41
21. Dependent Claim 32 41
B. Ground 2: Claims 13–17, 22, and 24 are unpatentable under 35 U.S.C. § 103(a) over LeFebvre in view of Barone. 41
1. Dependent Claim 13 43
a. Limitation 13(a).....43
b. Limitation 13(b) 43
c. Limitation 13(c).....44
d. Limitation 13(d) 45
2. Dependent Claim 14 47
3. Dependent Claim 15 48
4. Dependent Claim 16 49
5. Dependent Claim 17 49
6. Dependent Claim 22 49
7. Dependent Claim 24 50
C. Ground 3: Claims 1 and 24 are unpatentable under 35 U.S.C. § 103(a) over LeFebvre in view of Denny and Provasnik. 52
1. Independent Claim 1 53
a. Claim 1 Preamble.....53
b. Limitation 1(a).....53
c. Limitation 1(b) 53
d. Limitation 1(c).....53
e. Limitation 1(d) 53
f. Limitation 1(e).....53
g. Limitation 1(f).....55
h. Limitation 1(g) 55
2. Dependent Claim 24 55
D. Ground 4: Claims 2, 3, and 26–28 are unpatentable under 35 U.S.C. § 103(a) over Armitage.....56
1. Independent Claim 2 56
a. Claim 2 Preamble.....56

b. Limitation 2(a) 57
c. Limitation 2(b) 59
d. Limitation 2(c) 60
e. Limitation 2(d) 60
f. Limitation 2(e) 60
g. Limitation 2(f) 62
h. Limitation 2(g) 62
i. Limitation 2(h) 63
2. Dependent Claim 3 64
3. Dependent Claim 26 66
4. Dependent Claim 27 66
a. Limitation 27(a) 66
b. Limitation 27(b) 66
5. Dependent Claim 28 67
E. Ground 5: Claims 4–10, 13–18, 20–23, 25, and 29–32 are unpatentable under 35 U.S.C. § 103(a) over Armitage in view of LeFebvre. 68
1. Dependent Claim 4 69
2. Dependent Claim 6 70
3. Dependent Claim 8 71
a. Limitation 8(a) 71
b. Limitation 8(b) 71
4. Dependent Claim 9 72
a. Limitations 9(a) and 9(b) 72
b. Limitation 9(c) 72
5. Dependent Claim 10 72
6. Independent Claim 23 72
a. Claim 23 Preamble 72
b. Limitation 23(a) 73
c. Limitation 23(b) 73

d. Limitation 23(c) 73
e. Limitation 23(d) 73
f. Limitation 23(e) 73
g. Limitation 23(f) 73
7. Dependent Claim 25 73
8. Dependent Claim 29 73
9. Dependent Claim 30 73
10. Dependent Claim 31 73
11. Independent Claim 5 74
a. Claim 5 Preamble 74
b. Limitation 5(a) 74
c. Limitation 5(b) 74
d. Limitation 5(c) 74
e. Limitation 5(d) 74
f. Limitation 5(e) 74
g. Limitation 5(f) 74
h. Limitation 5(g) 75
i. Limitation 5(h) 75
j. Limitation 5(i), 5(j), and 5(k) 75
12. Dependent Claim 7 75
13. Dependent Claim 13 75
a. Limitation 13(a) 75
b. Limitation 13(b) 77
c. Limitation 13(c) 77
d. Limitation 13(d) 78
14. Dependent Claim 14 79
15. Dependent Claim 15 79
16. Dependent Claim 16 80
17. Dependent Claim 17 81
18. Dependent Claim 18 81

19. Dependent Claim 20 81
20. Dependent Claim 21 82
21. Dependent Claim 22 83
22. Dependent Claim 32 84
F. Ground 6: Claims 1 and 24 are unpatentable under 35 U.S.C. § 103(a) over Armitage in view of LeFebvre, Denny, and Provasnik. 84
1. Independent Claim 1 84
a. Claim 1 Preamble 85
b. Limitation 1(a).....85
c. Limitation 1(b) 85
d. Limitation 1(c).....85
e. Limitation 1(d) 85
f. Limitation 1(e).....85
g. Limitation 1(f) 86
h. Limitation 1(g) 86
2. Dependent Claim 24 86
XI. CONCLUSION.....86

TABLE OF AUTHORITIES

Page(s)

Cases

Advanced Bionics LLC v. MED-EL Elektromedizinische Geräte GmbH,
IPR2019-01469, Paper 6 (PTAB Feb. 13, 2020) 16

Becton, Dickinson & Co. v. B. Braun Melsungen AG,
IPR2017-01586, Paper 8 (PTAB Dec. 15, 2017) 16, 17

HTC Corp. v. Cellular Communications Equip., LLC,
877 F.3d 1361 (Fed. Cir. 2017) 15

Koninklijke Philips N.V. v. Google LLC,
948 F.3d 1330 52

Phillips v. AWH Corp.,
415 F.3d 1303 (Fed. Cir. 2005) 15

Pitney Bowes, Inc. v. Hewlett-Packard Co.,
182 F.3d 1298 (Fed. Cir. 1999) 19, 56

Realtime Data, LLC v. Iancu,
912 F.3d 1368 (Fed. Cir. 2019) 18, 56

Rowe v. Dror,
112 F.3d 473 (Fed. Cir. 1997) 19

Vestas-American Wind Technology, Inc. v. General Electric Co.,
IPR2018-01015, Paper 9 (PTAB Nov. 14, 2018) 17

Wellman, Inc. v. Eastman Chem. Co.,
642 F.3d 1355 (Fed. Cir. 2011) 15

Statutes

35 U.S.C. § 102 ..... 18, 56
35 U.S.C. § 102(a) 5

35 U.S.C. § 102(b) 5
35 U.S.C. § 102(e) 5
35 U.S.C. § 103 18
35 U.S.C. § 103(a) ..... passim
35 U.S.C. § 314(a) 4
35 U.S.C. § 325(d) 16
35 U.S.C. §§ 311-319 1

Regulations

37 C.F.R. § 42 1
37 C.F.R. § 42.10(b) 3
37 C.F.R. § 42.100(b) 15
37 C.F.R. § 42.104(a).....2
37 C.F.R. § 42.104(b)(3).....15
37 C.F.R. § 42.106(a).....3
37 C.F.R. § 42.22(a).....4
37 C.F.R. § 42.63(e).....3
37 C.F.R. § 42.8 88
37 C.F.R. § 42.8(a)(1) 1
37 C.F.R. § 42.8(b)(1).....1
37 C.F.R. § 42.8(b)(2).....2
37 C.F.R. § 42.8(b)(3).....1
37 C.F.R. § 42.8(b)(4).....1
83 FR 51340.....15

Other Authorities

MPEP 2111.02(II).....19

Interim Procedure for Discretionary Denials in AIA Post-Grant Proceedings with Parallel District Court Litigation.....17

EXHIBIT INDEX

Ex #	Exhibit Description
1001	U.S. Patent No. 9,365,223 ("the '223 patent")
1002	Prosecution History of the '223 Patent
1003	Expert Declaration of Steven Ricca
1004	*Curriculum Vitae* for Steven Ricca
1005	U.S. Patent Publication No. 2007/0152107 A1 to LeFebvre et al. ("LeFebvre")
1006	U.S. Patent Publication No. 2011/0282540 A1 to Armitage et al. ("Armitage")
1007	U.S. Patent Publication No. 2007/0208841 A1 to Barone et al. ("Barone")
1008	U.S. Patent No. 5,633,628 to Denny et al. ("Denny")
1009	U.S. Patent No. 4,282,754 to Provasnik ("Provasnik")
1010	U.S. Patent No. 6,487,478 to Azzaro et al. ("Azzaro")
1011	Amsted Rail Company, Inc.'s Complaint filed against Hum Industrial Technology, Inc. (ECF No. 1) filed on April 18, 2022
1012	Waiver of the Service of Summons upon Hum Industrial Technology, Inc. (ECF No. 4) dated June 14, 2022
1013	U.S. Provisional Application No. 61/661,661 ("the '661 Provisional")
1014	U.S. Patent Application No. 12/861,713 ("the '713 Application")
1015	U.S. Patent No. U.S. 7,688,218 to LeFebvre et al. ("LeFebvre '218")
1016	Third Generation On-Board Monitoring and Control System Based on Controller Area Network Technology Dr. John Donelson III, et al.
1017	Defendants' Stipulation of Invalidity Contentions

LISTING OF CLAIMS

U.S. Patent No. 9,365,223 (Claims 1–10, 13–18, and 20–32)

Claim Designation	Claim Language
Claim 1 Preamble	A sensor device for monitoring temperature on a railcar, comprising:
Limitation 1(a)	a housing mountable on a railcar;
Limitation 1(b)	a temperature sensor;
Limitation 1(c)	electrical circuitry in communication with said temperature sensor for obtaining information regarding the temperature being sensed, said electrical circuitry positioned within said housing;
Limitation 1(d)	a power source electrically connected to said electrical circuitry for providing power thereto, said power source positioned within said housing;
Limitation 1(e)	a probe external to said housing and which probe includes said temperature sensor and a magnet positioned to magnetically attract the part of the railcar against which the probe will be placed; and
Limitation 1(f)	a communication device capable of broadcasting information regarding the temperature sensed, said communication device positioned within said housing;
Limitation 1(g)	wherein the power consumption of said sensor device is managed by placing said sensor device in a standby state and periodically awakening said sensor device to collect readings from said temperature sensor and to transmit the information regarding the temperature sensed via said communication circuitry.
Claim 2 Preamble	A system for monitoring a railcar, comprising:
Limitation 2(a)	a plurality of sensor devices located on the railcar for monitoring parameters or conditions of the railcar, each of said sensor devices being separate from one another and including a sensor for monitoring one of said parameters or conditions of the railcar;
Limitation 2(b)	said plurality of sensor devices including at least one temperature sensor device having:

Limitation 2(c)	a housing;
Limitation 2(d)	a temperature sensor in thermal communication with an item of the railcar for which the temperature is being monitored, which item is external to said housing;
Limitation 2(e)	electrical circuitry in communication with said temperature sensor for obtaining information regarding the temperature being sensed, said electrical circuitry positioned within said housing;
Limitation 2(f)	a power source electrically connected to said electrical circuitry for providing power thereto, said power source positioned within said housing;
Limitation 2(g)	a communication device capable of broadcasting information regarding the temperature sensed via wireless communication, said communication device positioned within said housing; and
Limitation 2(h)	a communication management unit, mounted on the railcar, capable of two way wireless communication with each of said plurality of sensor devices for receiving information therefrom, said communication management unit having a wireless communication device for broadcasting information about the parameter or condition being monitored.
Claim 3	The system of claim 2 wherein said communication management unit can make a determination of an alarm condition based on data collected by two or more of said sensor devices.
Claim 4	The system of claim 2 wherein each of said plurality of sensor devices is capable of exchanging data with other of said plurality of sensor devices and with said communication management unit.
Claim 5 Preamble	A system for monitoring the operation of a railcar comprising:
Limitation 5(a)	a. one or more sensor units mounted on said railcar, each of said sensor units monitoring an operating parameter of said railcar wherein each of said sensor units comprises
Limitation 5(b)	a sensor,

Limitation 5(c)	a power source,
Limitation 5(d)	a processor,
Limitation 5(e)	memory,
Limitation 5(f)	communication circuitry,
Limitation 5(g)	and software, stored in said memory and executed by said processor, said software performing the functions of collecting data from said sensor at periodic intervals,
Limitation 5(h)	b. a communication management unit, mounted on said railcar, said communication management unit in wireless communication with said one or more sensor units;
Limitation 5(i)	wherein said communication management unit applies heuristics to analyze data collected from said one or more sensor units
Limitation 5(j)	(a) to determine if an actual failure exists and
Limitation 5(k)	(b) to predict potential or imminent failures based on a statistical analysis of said collected data.
Claim 6	The system of claim 5 wherein said determination of an alarm condition can be made by one of said sensor units.
Claim 7	The system of claim 5 wherein said determination of an alarm condition can be made by said communication management unit based on data collected by two or more of said sensor units.
Limitation 8(a)	The system of claim 5 wherein each of said sensor units comprises: a. a sensor; b. a power source; c. a processor; d. memory; e. communications circuitry; and f. software, stored in said memory and executed by said processor,
Limitation 8(b)	said software performing the functions of collecting data from said sensor at periodic intervals.
Limitation 9(a)	The system of claim 8 wherein said software further performs the function of: assessing the collected data to determine if an alarm condition exists;
Limitation 9(b)	and communicating said alarm condition to said communication management unit via said communications circuitry

Limitation 9(c)	and managing the power consumption of said sensor unit by placing said sensor unit in a standby state and periodically awakening said sensor unit to collect data from said sensor and to transmit information regarding said operating parameter to said communication management unit via said communication circuitry.
Claim 10	The system of claim 5 wherein said one or more sensor units and said communication management unit are in wireless communication with each other and form a local area wireless network for said railcar.
Limitation 13(a)	The system of claim 5 further comprising a base unit, said base unit being in wireless communication with said communication management unit,
Limitation 13(b)	said based unit performing the functions of: a. collecting data and alarms from said communication management unit;
Limitation 13(c)	b. displaying alarm conditions raised by said communication management unit; and
Limitation 13(d)	c. determining high level alarms based on data and alarms collected from said communication management unit.
Claim 14	The system of claim 13 wherein said base unit is in wireless communication with multiple communication management units.
Claim 15	The system of claim 14 wherein said base unit uses distributed event processing to perform trend analysis based on alarms and data collected from one or more communication management units to determine if a high level alarm should be raised.
Claim 16	The system of claim 14 wherein said base unit applies heuristics to data collected from said one or more communication management units to determine if a high level alarm should be raised.

Claim 17	The system of claim 16 wherein said base unit and said one or more communication management units communicate with each other via a satellite communications capability or a cellular network capability.
Claim 18	The system of claim 5 wherein said sensor is selected from a group consisting essentially of temperature sensors, pressure sensors, strain sensors, load cell sensors, hand brake position sensors, magnetic sensors, vibration sensors, gyroscopes, acceleration sensors, hall effect sensors, piezio resistive microphones and switches.
Claim 20	The system of claim 5 wherein said alarm is determined using distributed event processing based on a comparison between current data and statistical models of behavior.
Claim 21	The system of claim 5 wherein said alarms are determined based on a comparison of currently collected data versus data collected over a pre-determined preceding time period.
Claim 22	The system of claim 5 wherein an alarm is raised based one or more of the following criteria: a. a pre-determined percentage of current data readings exceeds allowable peak readings; b. a pre-determined percentage of current data readings exceeds a determined value; c. a pre-determined percentage of current data readings exceeds a standard deviation from readings from the same railcar; d. a pre-determined percentage of current data readings exceeds a standard deviation from all railcars in the fleet; or e. the rate of change of current data readings exceeds a pre-determined threshold.
Claim 23 Preamble	A monitoring device for monitoring temperature on a railcar, comprising:
Limitation 23(a)	a housing mountable on a railcar;
Limitation 23(b)	a temperature sensor configured to be in thermal communication with a portion of the railcar to be monitored for temperature, which portion is external to said housing;

Limitation 23(c)	electrical circuitry in communication with said temperature sensor for obtaining information regarding the temperature being sensed, said electrical circuitry positioned within said housing;
Limitation 23(d)	a power source electrically connected to said electrical circuitry for providing power thereto, said power source positioned within said housing; and
Limitation 23(e)	a communication device capable broadcasting information regarding the temperature sensed, said communication device positioned within said housing;
Limitation 23(f)	wherein the power consumption of said monitoring device is managed by placing said monitoring device in a standby state and periodically awakening said monitoring device to collect readings from said temperature sensor and to transmit the information regarding the temperature sensed via said communication circuitry.
Claim 24	The monitoring device of claim 23 wherein at least a section of said temperature sensor is disposed outside of and spaced from said housing to be capable of contacting the surface of the railcar for which the temperature is to be monitored.
Claim 25	The monitoring device of claim 23 wherein said circuitry is configured to apply heuristics to analyze data collected from said temperature sensor to determine if a problem exists.
Limitation 26(a)	The system of claim 2 wherein said communication management unit applies heuristics to analyze data collected from said one or more sensor devices
Limitation 26(b)	(a) to determine if an actual failure exists and
Limitation 26(c)	(b) to predict potential or imminent failures based on a statistical analysis of said collected data.
Limitation 27(a)	The system of claim 2 further comprising a second temperature sensor located on said railcar for measuring ambient air temperature,

Limitation 27(b)	wherein said system uses information obtained from said second temperature sensor about the ambient temperature to calibrate the temperature data received from said first sensor regarding the item of the railcar being monitored.
Claim 28	The system of claim 2 wherein said communicating management unit is capable of communicating data and alarms to a remote location located off of the train of which the railcar is a part.
Claim 29	The system of claim 2 wherein the power consumption of each of said sensor devices is managed by placing each said sensor device in a standby state and periodically awakening said sensor device to collect readings from said sensor device and to transmit the information regarding the parameter or condition being sensed via said communication circuitry.
Claim 30	The system of claim 2 wherein said communication management unit and said plurality of sensor devices form a wireless mesh network for said railcar.
Claim 31	The system of claim 5 wherein the power consumption of each of said sensing units is managed by placing each sensing unit in a standby state and periodically awakening said sensing unit to collect readings from said sensor and to transmit information via said communications circuitry.
Claim 32	The system of claim 5 wherein said communication management unit is capable of communicating with a remote location located off of a train of which said railcar is a part.

I. FORMALITIES

A. Mandatory Notices (37 C.F.R. § 42.8(a)(1))

1. Real Party in Interest (37 C.F.R. § 42.8(b)(1))

Petitioner Hum Industrial Technology, Inc. ("Hum" or "Petitioner") is the real party-in-interest in this petition.

Dr. Brent Wilson, an employee of Hum who has been named as a separate defendant in *Amsted Rail Company, Inc. v. Hum Industrial Technology, Inc. et al*, Case No. 4:22-cv-00445-AGF (United States District Court for the Eastern District of Missouri), is also a real party-in-interest in this petition. *See* Section I.A.4, *infra*.

2. Designation of Lead and Backup Counsel (37 C.F.R. § 42.8(b)(3))

Lead Counsel	Backup Counsel
Eric J. Rakestraw, Reg. No. 68,740 HUSCH BLACKWELL LLP 190 Carondelet Plaza, Suite 600 St. Louis, MO 63105 (314) 480-1500 Telephone (314) 480-1505 Facsimile PTAB- ERakestraw@huschblackwell.com	Andrea L. Shoffstall, Reg. No. 75,426 HUSCH BLACKWELL LLP 1801 Wewatta Street, Suite 1000 Denver, CO 80202 303.749.7200 Telephone 303.749.7272 Facsimile PTAB- AShoffstall@huschblackwell.com
	Backup Counsel
	Daisy Manning Reg. No. 66,369 Husch Blackwell LLP 190 Carondelet Plaza, Suite 600 St. Louis, MO 63105 (314) 480-1500 Tel (314) 480-1505 Fax PTAB- DManning@huschblackwell.com

3. Notice of Service (37 C.F.R. § 42.8(b)(4))

Please direct all correspondence to lead counsel at the above address. Petitioner also consents to email service at the above email addresses for lead and back-up counsel and hand delivery at the above addresses for lead and backup counsel.

4. Related Proceedings (37 C.F.R. § 42.8(b)(2))

U.S. Patent No. 9,365,223 is presently asserted in *Amsted Rail Company, Inc. v. Hum Industrial Technology, Inc. et al*, Case No. 4:22-cv-00445-AGF (United States District Court for the Eastern District of Missouri). The complaint (EX1011) was considered served pursuant to the Waiver of the Service of Summons dated June 14, 2022 (EX1012). Thus, this Petition is filed within one year after Hum was served with a complaint for infringement. Hum has not filed a separate civil action challenging the validity of the claims of the ’223 Patent.

This petition is one of three petitions that Petitioner has filed concurrently, requesting *inter partes* review of U.S. Patents Nos. 9,365,223 B2, 9,981,673 B2, and 10,137,915 B2. Docket numbers for those P.T.A.B. proceedings are not yet available, but each of these petitions could affect, or be affected by, a decision in either of the other two proceedings.

B. Grounds for Standing (37 C.F.R. § 42.104(a))

Petitioner hereby certifies that the ’223 Patent is available for *inter partes*

review, and Petitioner is not barred or estopped from requesting an *inter partes* review challenging the patent claims on the Grounds identified in the petition.

C. Procedural Statements

This Petition is filed in accordance with 37 C.F.R. § 42.106(a). A Power of Attorney (37 C.F.R. § 42.10(b)) and Exhibit List (37 C.F.R. § 42.63(e)) are filed concurrently with this Petition. The fee is being paid via Deposit Acct. No. 11-0160. The United States Patent and Trademark Office is authorized to charge any fee deficiency, or credit any overpayment, to Deposit Acct. No. 11-0160.

II. INTRODUCTION

Hum Industrial Technology, Inc. ("Hum" or "Petitioner") respectfully requests that the Board institute *inter partes* review of U.S. Patent No. 9,365,223 ("the '223 Patent"), which is assigned to Amsted Rail Company, Inc. ("Amsted" or "Patent Owner").

The '223 Patent is directed to a system for monitoring operational parameters of a railcar (for example, the temperature of the railcar's wheel bearings). In this system, one or more sensor units are attached to the railcar to monitor areas of interest (for example, by placing a unit having a thermometer in close proximity to the wheel bearing). These sensor units wirelessly transmit their collected data to a central node, called a "communication management unit" or "CMU," mounted on the railcar. The CMU processes the sensor data and, if a

deviation from normal operating conditions is detected, it generates an alarm message. The alarm message is then transmitted upstream for review by a human operator who can take appropriate action.

None of this was new when the '223 Patent was filed, and none of it was invented by Amsted. To the contrary: the '223 Patent describes systems and sensor devices that use standard, well-known, commercially available components. Those components are arranged in the same manner as disclosed in the prior art, and perform the same functions as in the prior art. Indeed, an identical system—which uses the same widely available components to perform the same functions in the same way—was publicly disclosed at least as early as 2007. *See* EX1005. Compared to the prior art, the '223 Patent's only contribution is using (slightly) different terminology to describe the same components. There is nothing patentable here.

A petition for *inter partes* review must demonstrate "a reasonable likelihood that the petitioner would prevail with respect to at least 1 of the claims challenged in the petition." 35 U.S.C. § 314(a). For the reasons discussed in further detail below, the Petition meets this threshold.

III. STATEMENT OF THE PRECISE RELIEF REQUESTED AND THE REASONS THEREFOR (37 C.F.R. § 42.22(a))

Petitioner respectfully requests a final written decision that claims 1–10, 13–

18, and 20–32 of the ’223 Patent are invalid. Claims 1, 2, 5, and 23 are independent.

Petitioner requests *inter partes* review of the ’223 Patent based on the following patents, all of which were filed, issued, or published prior to the earliest priority date of the ’223 Patent, which is no earlier than June 19, 2012. The prior art relevant to this Petition includes: U.S. Patent Publication No. 2007/0152107 A1 to LeFebvre et al. (“LeFebvre”) (EX1005), published on July 5, 2007; U.S. Patent Publication No. 2011/0282540 A1 to Armitage et al. (“Armitage”) (EX1006), filed on May 11, 2011 and published on November 17, 2011; U.S. Patent Publication No. 2007/0208841 A1 to Barone et al. (“Barone”) (EX1007), published on September 6, 2007; U.S. Patent No. 5,633,628 to Denny et al. (“Denny”) (EX1008), issued on May 27, 1997; and U.S. Patent No. 4,282,754 to Provasnik (“Provasnik”) (EX1009), issued on August 11, 1981.

LeFebvre, Barone, Denny, and Provasnik are each prior art to the ’223 Patent under 35 U.S.C. § 102(b). Armitage is prior art to the ’223 Patent under at least 35 U.S.C. §§ 102(a) and 102(e).[1]

This Petition further relies upon the Declaration of Steven Ricca (“Ricca Decl.” (EX1003); Ricca curriculum vitae (EX1004)), which is relevant to the skill,

[1] With respect to § 102(e): Armitage claims, and is entitled to, a provisional application filing date of May 11, 2010.

knowledge, and experience of a person having ordinary skill in the art ("PHOSITA") at the time of the invention and how that person would have understood and applied the prior art. The statutory grounds on which the challenge is based are:

(1) Claims 2–10, 18, 20, 21, 23, and 25–32 are unpatentable under 35 U.S.C. § 103(a) over LeFebvre.

(2) Claims 13–17, 22, and 24 are unpatentable under 35 U.S.C. § 103(a) over LeFebvre in view of Barone.

(3) Claims 1 and 24 are unpatentable under 35 U.S.C. § 103(a) over LeFebvre in view of Denny and Provasnik.

(4) Claims 2, 3, and 26–28 are unpatentable under 35 U.S.C. § 103(a) over Armitage.

(5) Claims 4–10, 13–18, 20–23, 25, and 29–32 are unpatentable under 35 U.S.C. § 103(a) over Armitage in view of LeFebvre.

(6) Claims 1 and 24 are unpatentable under 35 U.S.C. § 103(a) over Armitage in view of LeFebvre, Denny, and Provasnik.

IV. U.S. PATENT NO. 9,365,223 ("THE '223 PATENT") (EX1001)

U.S. Patent Application No. 13/842,427 ("the '427 Application"), which issued as the '223 Patent, was filed on March 15, 2013. The '427 Application

claims priority to U.S. Provisional Application No. 61/661,661, filed on June 19, 2012 (EX1013).

The ’427 Application also claims to be a continuation-in-part of Application No. 12/861,713 (“the ’713 Application,” EX1014), filed August 23, 2010. Each of the challenged claims, however, recites at least one limitation that relies upon new matter added in the ’427 Application, and is neither disclosed in nor supported by the ’713 Application.

Independent Claim	**Exemplary Limitation(s) Without Support in the ’713 Application**
1	“a temperature sensor”; “a magnet”
2	“a temperature sensor”
5	“wherein said communication management unit applies heuristics”
23	“a temperature sensor”

Accordingly, the challenged claims are entitled to a priority date of June 19, 2012 at the earliest.

None of the references relied upon in this petition (LeFebvre, Armitage, Barone, Denny, or Provasnik) were cited during prosecution of the ’427 Application. The first Office Action, issued November 4, 2014, rejected the pending claims as obvious in view of U.S. 8,244,411 (“Baker”) and a web page describing a “Locomotive Monitoring Unit” sold by Lat-Lon (“Lat-Lon”).

EX1002, 108–122. In a response filed May 1, 2015 (EX1002, 151–166), Amsted submitted a declaration by inventor Andrew Martin (*Id.*, 167–171), which alleged that the claimed invention had been reduced to practice prior to January 1, 2013 (antedating the Lat-Lon reference). Amsted then argued that the remaining claims were nonobvious in view of Baker standing alone.

A second Office Action was issued on August 24, 2015. EX1002, 448–466. The examiner withdrew the previous rejections based upon Baker and Lat-Lon, and instead relied upon new rejections over US 2008/0195265 ("Searle") in view of Baker. In a response filed January 27, 2016 (EX1002, pp. 507–527), Amsted amended every independent claim (and numerous dependent claims) in an attempt to distinguish Searle. Amsted argued, *inter alia*, that while Searle "provides a train monitoring system having sensors, located on the bogies of each railcar, wherein the sensors are arranged in a train wide wireless network," Searle "utilizes a different topology" and fails to disclose a "CMU" on each railcar as required by the claims. *See, e.g.,* EX1002, pp. 518, 523. Additionally, Amsted argued that certain claims (corresponding to issued claims 9, 23, 29, and 31) required a power management technique that is not disclosed by Searle. *See, e.g.,* EX1002, p. 519. This argument resulted in a Notice of Allowability. EX1002, pp. 538–542.

In allowing the claims over Searle, the Examiner apparently failed to recognize that the use of a CMU on each railcar was well-known. For example,

LeFebvre (EX1005) and Armitage (EX1006) each disclose the same network topology as claimed in the ’223 Patent, including a CMU on each railcar, as discussed in detail below.[2]

V. BACKGROUND OF RAILCAR MONITORING SYSTEMS AND THE PRIOR ART RELIED UPON IN THIS PETITION

Railcar monitoring systems having essentially the same architecture as claimed by the ’223 Patent have been in widespread use for decades. *See generally* EX1016; EX1003, ¶¶ 29–41.

This challenge is based primarily on three prior art references: LeFebvre, Armitage, and Barone. Two additional references, Denny and Provasnik, are cited with respect to the temperature sensor limitations of claim 1 and related dependent claims.

1. LeFebvre

LeFebvre is directed to a system for wirelessly monitoring the condition of railcar wheels and wheel bearings. *See* EX1005, (57) Abstract. LeFebvre’s system utilizes a plurality of sensors to monitor the wheels and wheel bearings on each railcar, wherein the sensors communicate wirelessly with a control unit located on the railcar. *Id*. LeFebvre’s control node is a “communication management unit” in

[2] LeFebvre additionally discloses the power management technique required by claims 9, 23, 29, and 31.

the parlance of the ’223 Patent. EX1003, ¶ 50.

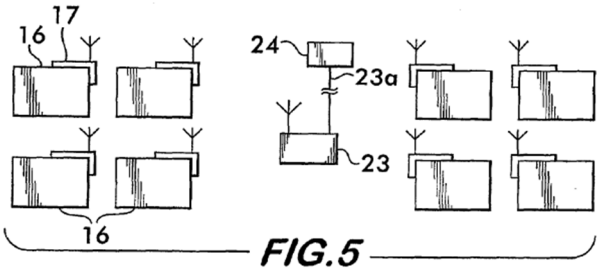

Data collected by the control unit is analyzed using heuristics to determine, for example, if a wheel bearing failure is approaching or imminent. EX1005, ¶¶ [0058]–[0059]; EX1003, ¶ 51. If a failure condition is detected, an alarm is wirelessly transmitted to a data processing system in a remote location. EX1005, ¶¶ [0038], [0052]. An operator can then take appropriate action in response to the alarm. EX1003, ¶ 51.

2. Armitage

Armitage discloses a “mobile railway car monitoring system [including] a plurality of sensor nodes coupled to an undercarriage portion of a railway car.” EX1006, ¶ [0004]. Figure 1 of Armitage depicts an exemplary embodiment with four sensor nodes 121–124 attached to a railcar 110. EX1006, ¶ [0012], Fig. 1.

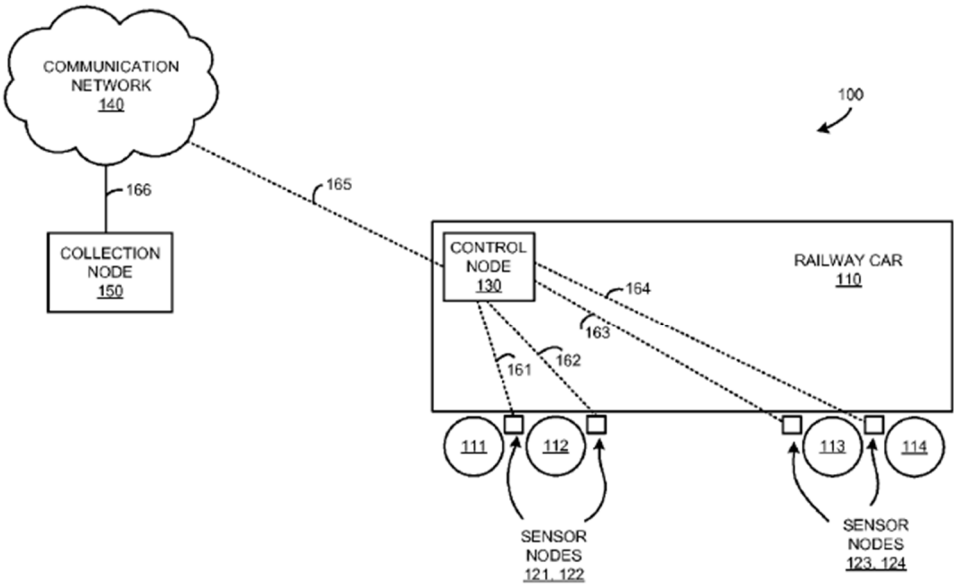

FIGURE 1

Armitage's "[s]ensor nodes 121-124 each include equipment to sense and report information about undercarriage elements of a railway car." EX1006, ¶ [0014]. Each sensor node "includes a sensor portion" that "could include thermometers" or "other sensing equipment and circuitry." *Id.* The system also includes a "control node" on each railcar. EX1006, ¶¶ [0004], [0012], Figs. 1, 3, 5. The control node is a "communication management unit" in the parlance of the '223 Patent. EX1003, ¶¶ 52–53.

Data collected by the control unit is analyzed using heuristics to determine, for example, if a component failure is approaching or imminent. EX1006, ¶ [0027]; EX1003, ¶ 54. If a failure condition is detected, an alarm is wirelessly transmitted to a collection node in a remote location. EX1006, ¶ [0028]. An operator can then take appropriate action in response to the alarm. EX1003, ¶ 54.

3. Barone

Barone is directed to a system for wirelessly monitoring the condition of railcar wheels and wheel bearings. *See* EX1007, (57) Abstract. Barone's system utilizes a plurality of sensors to monitor the wheels and wheel bearings on each railcar, wherein the sensors are connected using a wireless mesh network such as Zigbee. *Id.*; EX1003, ¶ 55.

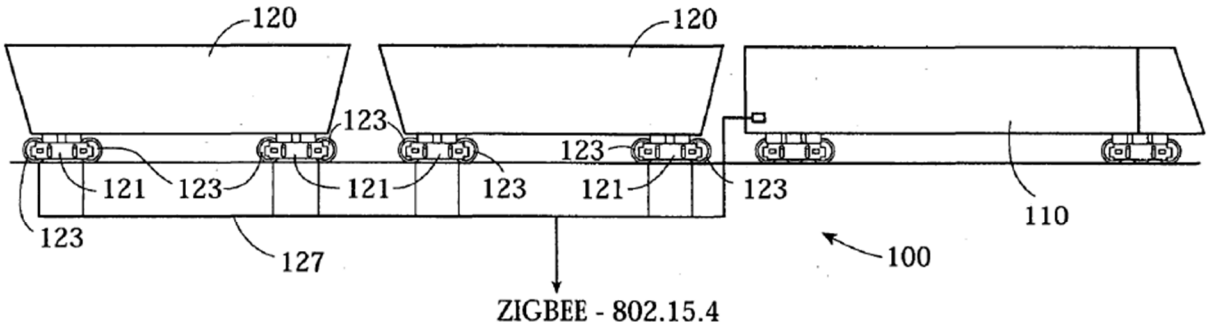

FIG. 1

The collected data is analyzed using heuristics to determine, for example, if a wheel bearing failure is approaching or imminent. EX1007, ¶¶ [0201]–[0220]; EX1003, ¶ 56. If a failure condition is detected, an alert (including the underlying data) is communicated to the locomotive and/or to a central monitoring station in a remote location. EX1007, ¶ [0045]; EX1003, ¶ 56. Figure 2 of Barone is illustrative, and is reproduced below.

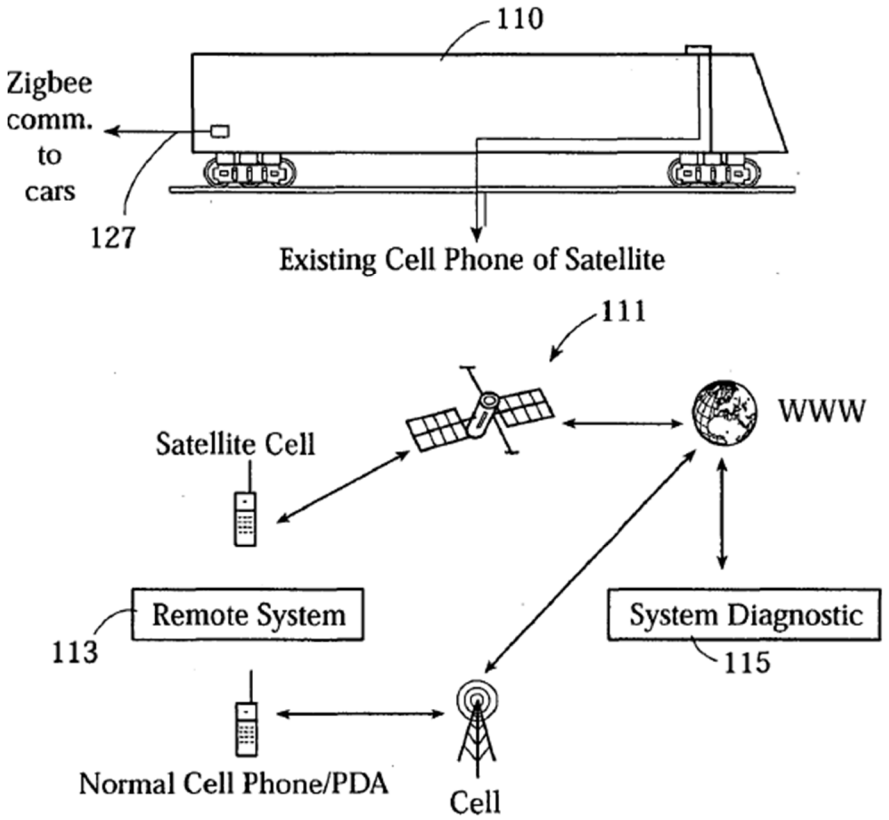

FIG. 2

4. Denny

Denny is directed to a temperature sensor for monitoring the temperature of a wheel assembly on a railway car. *See* EX1008; (57) Abstract. Specifically, Denny uses an external temperature sensor located inside the wheel assembly (to obtain an accurate temperature reading), while its sensor housing is located outside the wheel assembly (to avoid exposing the sensitive electronic circuitry to extreme heat). *Id.*; EX1003, ¶¶ 57–58. In the embodiment shown in Figure 1, below, temperature sensor 16 is external to the sensor housing 12. EX1008, 2:49-53, Figure 1.

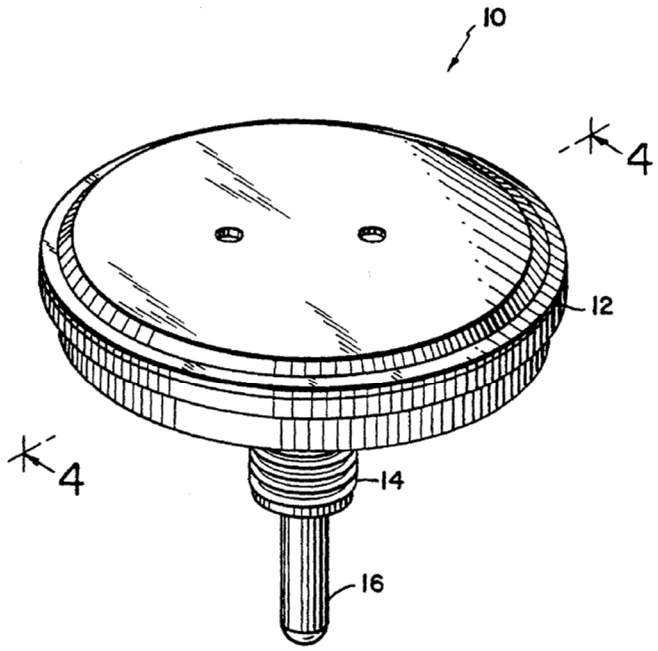

FIG.1

5. Provasnik

Provasnik discloses a temperature sensor that is magnetically attached to an engine block to measure its temperature. EX1009, 2:46–65. The advantage of using a magnetic attachment—which would have been obvious to a PHOSITA—is that it permits a sensor to be readily attached to, and removed from, a metallic substrate. EX1009, 1:8–15, 1:38–44, 4:65–68; EX1003, ¶ 59.

VI. <u>A PERSON HAVING ORDINARY SKILL IN THE ART</u>

The prior art and the Ricca Declaration demonstrate that a PHOSITA, at the time the ’223 Patent was filed, would have been a person with at least a B.S. degree in electrical or mechanical engineering or a related field with at least two

years' experience designing monitoring systems for railcar components, or monitoring systems for similar industrial equipment with rotating components. EX1003, ¶ 45. Less work experience could be compensated by a higher level of education, such as a master's degree, and vice versa. *Id*.

VII. CLAIM CONSTRUCTION UNDER 37 C.F.R. § 42.104(b)(3)

Unless otherwise addressed herein, the terms of the unexpired '223 Patent's claims are to be given their plain and ordinary meaning, as understood by one of ordinary skill in the art, in view of the '223 Patent's specification. *See* 37 C.F.R. § 42.100(b); 83 FR 51340; *Phillips v. AWH Corp*., 415 F.3d 1303 (Fed. Cir. 2005) (en banc). *See also* EX1003, ¶¶ 47–48.

Petitioners do not believe any construction would have an impact on the invalidity analyses set forth herein. *See HTC Corp. v. Cellular Communications Equip., LLC*, 877 F.3d 1361, 1367–68 (Fed. Cir. 2017) (affirming the Board absent an express construction of a term). Based on the evidence below and the prior art's description of the claimed elements being similar to that of the '223 Patent specification, Petitioners submit that there are no formal claim constructions necessary in this proceeding because "claim terms need only be construed to the extent necessary to resolve the controversy." *Wellman, Inc. v. Eastman Chem. Co.*, 642 F.3d 1355, 1361 (Fed. Cir. 2011) (cleaned up).

VIII. DISCRETION UNDER § 325(d)

The Board uses a two-prong test to determine whether it will deny institution under 35 U.S.C. § 325(d). Under the first prong, the Board determines whether the same or substantially the same prior art or arguments were previously considered by the USPTO. *Advanced Bionics LLC v. MED-EL Elektromedizinische Geräte GmbH*, IPR2019-01469, Paper 6 (PTAB Feb. 13, 2020) (Precedential). Barone, Provasnik, and Denny were not considered by the examiner. LeFebvre and Armitage were each cited in an IDS, but were not relied upon in rejecting the claims. Grounds based on a reference cited in an IDS but not considered at any length should not serve as the basis for denying institution under 35 U.S.C. § 325(d). *Becton, Dickinson & Co. v. B. Braun Melsungen AG*, IPR2017-01586, Paper 8 at 17-18 (PTAB Dec. 15, 2017) (Precedential).

Nor are the references cited herein substantially the same as the references considered during prosecution. In fact, the two primary references herein (LeFebvre and Armitage) are ***both*** directed to railcar monitoring systems having the same topology as that claimed in the ’223 Patent—including a CMU attached to each railcar, which the examiner found to be the alleged point of novelty over the prior art. Thus, the prior art relied upon herein teaches the very limitation found by the examiner to be missing from the prior art, which is highly persuasive

evidence supporting a decision to institute trial.[3] *Vestas-American Wind Technology, Inc. v. General Electric Co.*, IPR2018-01015, slip op. at 23-24 (Paper 9) (PTAB Nov. 14, 2018); *see Becton, Dickinson and Co. v. B. Braun Melsungen AG*, IPR2017-01586, slip op. at 17-18 (Paper 8) (PTAB Dec. 15, 2017) (informative).

Because the prior art and arguments presented herein are not the same or substantially similar to those considered by the Examiner, the second prong of *Advanced Bionics* does not apply.

IX. DISCRETION UNDER § 314(a)

The Office's June 21, 2022 Memorandum[4] ("Guidance Memo") states that "the PTAB will not discretionarily deny institution of an IPR or PGR in view of parallel district court litigation where a petitioner stipulates not to pursue in a parallel district court proceeding the same grounds as in the petition or any grounds that could have reasonably been raised in the petition." Guidance Memo at 7. In accordance with this guidance, Hum has offered Amsted a stipulation that, if IPR is

[3] LeFebvre also discloses the power management technique that was relied upon as an additional basis for patentability of claims 9, 23, 29, and 31.

[4] *Interim Procedure for Discretionary Denials in AIA Post-Grant Proceedings with Parallel District Court Litigation*, available at www.uspto.gov/sites/default/files/documents/interim_proc_discretionary_denials_aia_parallel_district_court_litigation_memo_20220621_.pdf.

instituted, it will not pursue in the District Court Litigation any ground raised or that could have been reasonably raised in an IPR with respect to claims 1–10, 13–18, and 20–32 of the ’223 Patent. EX1017.

X. GROUNDS FOR UNPATENTABILITY

Petitioner requests cancellation of the challenged claims on the following Grounds:

A. Ground 1: Claims 2–10, 18, 20, 21, 23, and 25–32 are unpatentable under 35 U.S.C. § 103(a) over LeFebvre.

As explained in detail below, a PHOSITA would understand that LeFebvre discloses every element of claims 2–10, 18, 20, 21, 23, and 25–32. Petitioner believes these claims are anticipated by LeFebvre under 35 U.S.C. § 102.

LeFebvre, however, does not *expressly* state that all disclosed limitations are part of a single embodiment. Petitioner has therefore elected to present this ground under 35 U.S.C. § 103. *See Realtime Data, LLC v. Iancu*, 912 F.3d 1368, 1373 (Fed. Cir. 2019) (“a disclosure that anticipates under § 102 also renders the claim invalid under § 103”) (cleaned up).

1. Independent Claim 2

a. Claim 2 Preamble[5]

This preamble merely describes an intended use of the system, which does not instill patentable weight. *Pitney Bowes, Inc. v. Hewlett-Packard Co.*, 182 F.3d 1298, 1305 (Fed. Cir. 1999); *see also Rowe v. Dror*, 112 F.3d 473, 478 (Fed. Cir. 1997); MPEP 2111.02(II).

To the extent that the preamble is limiting, LeFebvre discloses a railcar monitoring system comprising a plurality of "instrumented, flexible pads," each of which "contain sensors for monitoring temperature" and other parameters of the railcar. EX1005, (57) Abstract; EX1003, ¶ 74. Specifically, LeFebvre discloses a system comprising an instrumented pad 16 that contains one or more sensors, such as temperature sensors. EX1005, ¶¶ [0021], [0033], [0058]; EX1003, ¶ 74.

b. Limitation 2(a)

LeFebvre discloses a system comprising a plurality of instrumented pads 16, each of which comprises one or more sensors. EX1005, ¶¶ [0019], [0023], [0052]; EX1003, ¶ 76. Figure 5 of LeFebvre depicts an exemplary embodiment with a plurality of instrumented pads 16. EX1005, ¶ [0039], Fig. 5.

---

[5] Because Petitioner includes the full claim language of the '223 Patent in the Listing of Claims, Petitioner does not reproduce the full claim language here. The Board is encouraged to reference the Listing of Claims to see the full claim language.

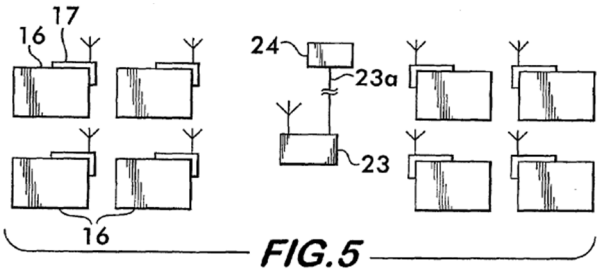

FIG.5

Each instrumented pad 16 is a separate device that is mounted on the railcar. Specifically, each pad is mounted upon the upper surface of a wheel bearing adapter 4, as shown in Fig. 4. EX1005, ¶ [0019]; EX1003, ¶ 77.

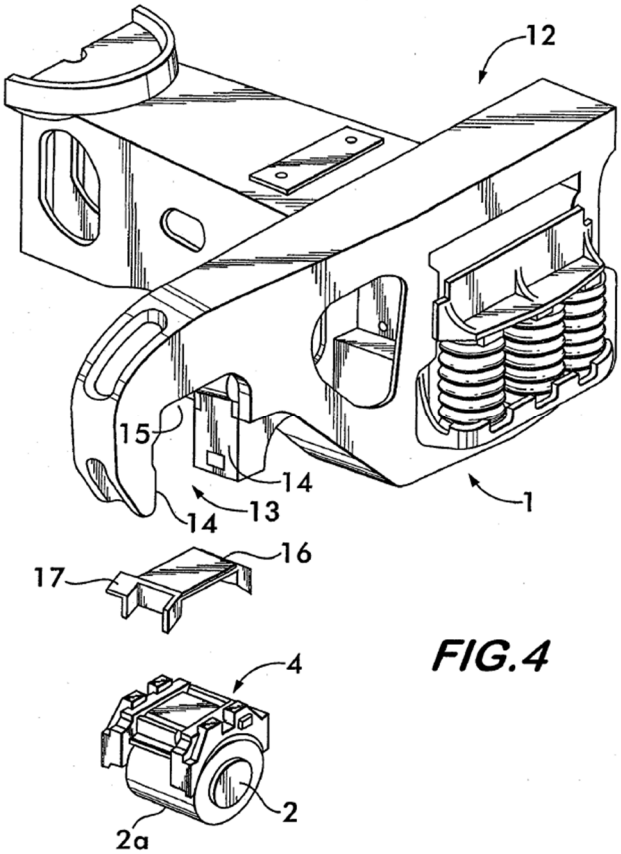

FIG.4

c. Limitation 2(b)

The instrumented pad 16 may comprise one or more temperature sensors. EX1005, (57) Abstract, ¶¶ [0021], [0033], [0058]; EX1003, ¶ 79.

d. Limitation 2(c)

The instrumented pad 16 "is preferably comprised of a cast or injected molded elastomeric polymer" (EX1005, ¶ [0019]), and "contains a plurality of sensors 5 which are preferably embedded into its upper, side, and lower surfaces or into other locations." *Id.*, ¶ [0021]. LeFebvre's instrumented pad therefore includes a housing. EX1003, ¶ 81.

The housing is mounted on a railcar. Specifically, the pad 16 is mounted on the upper surface of a bearing adapter 4, which in turn is mounted on the wheel bearing 2a. EX1005, ¶ [0019], Fig. 4; EX1003, ¶ 82.

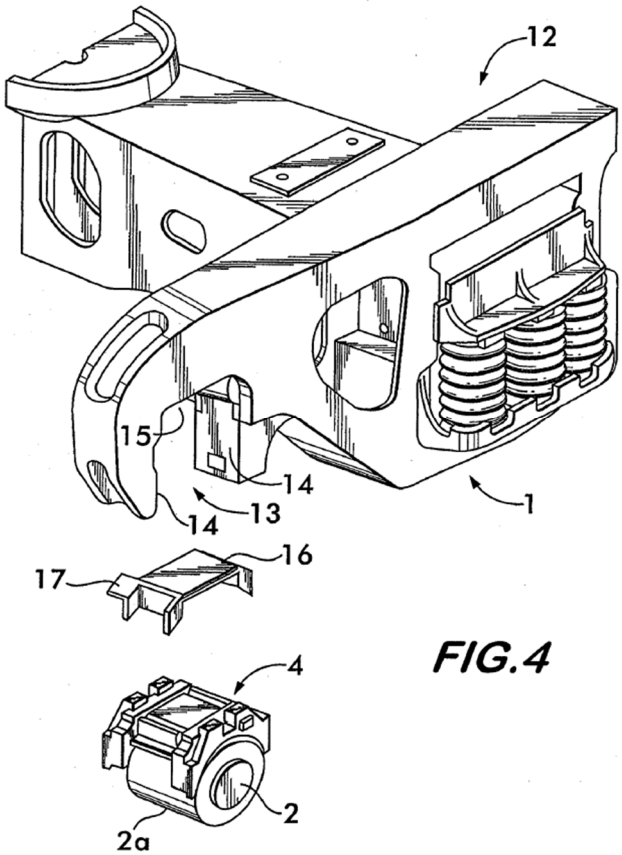

FIG.4

A PHOSITA would also have understood that the shape, size, or material of LeFebvre's housing could be changed (e.g., to accommodate mounting the sensor device in a different location on the railcar) without affecting the operation of the sensors or electronic circuitry contained within the housing. EX1001, 15:18–24; EX1003, ¶¶ 84–86.

e. Limitation 2(d)

The instrumented pad 16 may comprise one or more temperature sensors configured to monitor the temperature of a wheel bearing. EX1005, ¶ [0033];

EX1003, ¶ 87. As shown in Figure 4, wheel bearing 2a is external to the housing of instrumented pad 16. EX1005, ¶ [0019], Fig. 4; EX1003, ¶ 87.

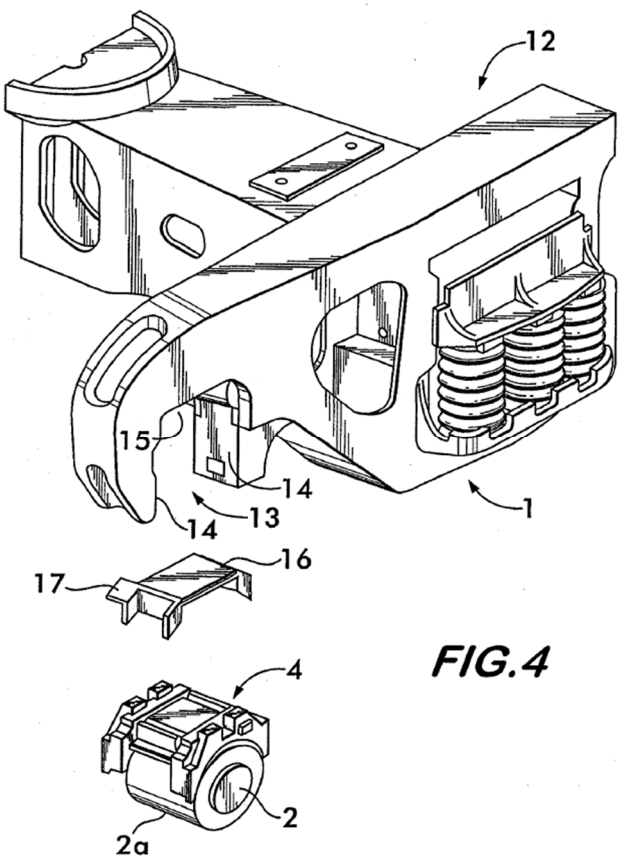

FIG.4

f. Limitation 2(e)

The instrumented pad 16 comprises electrical circuitry, specifically: "a power source 18, an analog/signal conditioning means and analog to digital conversion means and an associated microprocessor unit 19 and a communications unit 20." EX1005, ¶ [0021]; EX1003, ¶ 89.

This electrical circuitry is located within the housing, preferably within extended attachment portion 17, and is in communication with the temperature

sensor. *Id.*; EX1003, ¶¶ 90–91. "The sensors are electrically connected to the analog to digital conversion circuit unit and the microprocessor unit" (i.e., electrical circuitry). EX1005, ¶ [0021].

g. Limitation 2(f)

The instrumented pad 16 comprises a power source 18, which is electrically connected to the electrical circuitry 19, as shown in Figure 3. EX1005, ¶¶ [0021], [0023], Fig. 3; EX1003, ¶ 93.

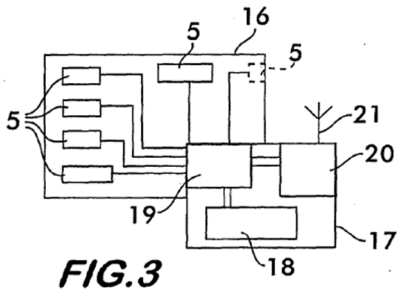

FIG.3

The power source is contained within the housing. For example, power source 18 may be contained within extended portion 17, as shown in Figure 3. EX1005, ¶ [0019], Fig. 3; EX1003, ¶ 93.

h. Limitation 2(g)

The instrumented pad 16 comprises a communications unit 20. EX1005, ¶¶ [0021], [0023]. The communications unit is preferably a radio transmitter/receiver, which is capable of wirelessly broadcasting information received from one or more sensors. EX1005, ¶¶ [0021], [0023]; *see also id.*, ¶¶ [0031]–[0032], ¶¶ [0043]–[0046]; EX1003, ¶ 95.

LeFebvre also discloses that the communications unit may be contained within the housing. For example, communications unit 20 may be contained within extended portion 17, as shown in Figure 3. EX1005, ¶ [0021], Fig. 3; EX1003, ¶ 96.

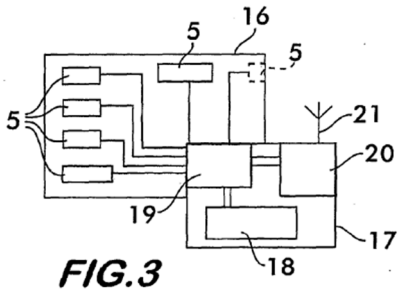

FIG.3

i. Limitation 2(h)

In LeFebvre's system, each of the instrumented pads 16 communicates wirelessly with a data control unit 23, which is mounted on the railcar body. EX1005, ¶ [0024]; EX1003, ¶ 98.

Data control unit 23 is linked via cable to a communications device 24. *Id.* "[T]he data control unit 23 passes messages on to the communications device 24 for onward transmission to the locomotive or to other remote receivers." EX1005, ¶ [0038]; EX1003, ¶ 99. For communication with the locomotive, the communications device may use a variety of wired or wireless transmission methods, including, for example, WiFi. EX1005, ¶ [0043]. For communication with remote sources, the communications device may comprise, for example, "a cellular or satellite radio system." EX1005, ¶ [0025]. All of these protocols provide

two-way communication (EX1003, ¶ 99), and LeFebvre states that messages can be "passed between pads on their way *to and from* the digital communications unit 23." EX1005, ¶ [0039].

Although their features are described separately, LeFebvre discloses that "the data control unit and the communications device may be contiguous." EX1005, ¶ [0024]. "Indeed, the two devices may well be combined or their functions shared so that the distinction could become unnecessary." EX1005, ¶ [0068].

LeFebvre's data control unit 23 and communication device 24 therefore constitute a "communication management unit having a wireless communication device." EX1003, ¶ 100.

As noted above, the '223 Patent claims to be a continuation-in-part of the '713 Application (EX1014). The '713 Application ***admits*** that LeFebvre discloses a CMU having the required architecture:

> The CMU includes a wireless communication device 68*a* for communicating with remote receivers 78. In one preferred embodiment, it can also communicate with, control and/or monitor other devices on the railcar 10. An example of such a device and system is described in U.S.

> Pat. No. 7,688,218[6] which is incorporated herein by reference.

EX1014, ¶ [0027]. This passage is incorporated by reference into the '223 Patent. EX1001, 1:6–9. The '223 Patent itself thus confirms that LeFebvre discloses a CMU. EX1003, ¶ 101.

LeFebvre therefore discloses or renders obvious every element of independent claim 2. EX1003, ¶¶ 103–106.

2. Dependent Claim 3

LeFebvre discloses a communications management unit—specifically, data control unit 23—that (a) collects data from a plurality of sensor devices located on the same railcar, and (b) uses heuristics to determine actual, potential, or imminent failures based on a statistical analysis of the collected data. EX1003, ¶ 107.

In LeFebvre's system, the data control unit acts as an "aggregator of information," collecting data from each of the instrumented pads on the railcar. EX1005, ¶¶ [0036], [0056], [0095]; EX1003, ¶ 108. And as discussed above, each of the instrumented pads contains one or more sensors that collect data about the railcar. *See* Sections X.A.1.b and X.A.1.c.

[6] The LeFebvre publication relied upon herein (EX1005) issued as U.S. Pat. No. 7,688,218 (EX1015).

The data control unit then uses "inference engine techniques" (i.e., heuristics) to analyze the collected data. EX1005, ¶¶ [0036], [0056], [0095]; EX1003, ¶ 109. "As an aggregator of information, it is programmed to compare information from all of the trucks on the railcar and draws inferences from them as to the status of the car, for example, the data control unit uses inference engine techniques to identify unsatisfactory behavior such as swaying, bouncing or even partial derailment." EX1005, ¶ [0036]. "Given that more than one instrumented pad may report misbehavior, then the components of the inference engine in the data control unit take responsibility for making assessments for the whole truck and ultimately for the freight car." EX1005, ¶ [0056]. "When serious trouble is inferred, then messages are sent via the communications link **23***a*, **24** to the locomotive, etc." *Id. See also* EX1005, ¶ [0095].

The "inference engine" techniques used by the data control unit include, for example, statistical analysis of the collected data. EX1005, ¶¶ [0058]–[0066]; EX1003, ¶ 110. For example, the data control unit may detect a wheel derailment condition by looking for a high frequency, periodically repeating load and "a similar signal from both wheels in the wheel set." EX1005, ¶¶ [0060]–[0061]. Similarly, the data control unit may detect track defects by "[m]onitoring the vertical loads in the instrumented pads and comparing these between wheel sets." EX1005, ¶ [0066].

The data control unit is ultimately responsible for determining the presence of an alarm condition that relates to the railcar as a whole. EX1005, ¶ [0095]; EX1003, ¶ 111. If an alarm condition is present, the data control unit is responsible for sending an alarm message upstream (i.e., to the locomotive and/or a remote data handling location). *Id.*

LeFebvre therefore discloses or renders obvious every element of claim 3. EX1003, ¶ 112.

3. Dependent Claim 4

LeFebvre discloses a system wherein the instrumented pads and the data control unit on each railcar form a wireless mesh network, in which each instrumented pad is capable of exchanging data with each other instrumented pad and with the data control unit. EX1003, ¶ 113.

For example, "[i]n the embodiment shown in FIG. 5, each instrumented pad **16** has its own microprocessor and radio. This arrangement is intended to use a protocol for networking which allows the messages to be passed between pads on their way to and from the digital communications unit **23**." EX1005, ¶ [0039]. The wireless networking protocol may be a mesh networking protocol such as Zigbee. EX1005, ¶ [0031]; EX1003, ¶ 114.

LeFebvre therefore discloses or renders obvious every element of claim 4. EX1003, ¶ 115.

4. Independent Claim 5

a. Claim 5 Preamble

See Section X.A.1.a; EX1003, ¶ 116.

b. Limitation 5(a)

See Section X.A.1.b; EX1003, ¶ 117.

c. Limitation 5(b)

See Section X.A.1.c; EX1003, ¶ 118.

d. Limitation 5(c)

See Section X.A.1.g; EX1003, ¶ 119.

e. Limitation 5(d)

The instrumented pad 16 comprises a microprocessor unit 19. EX1005, ¶¶ [0021], [0039]; EX1003, ¶ 120.

f. Limitation 5(e)

LeFebvre discloses that each instrumented pad contains non-volatile memory, which is used to store certain identifying information. EX1005, ¶ [0070]; EX1003, ¶ 122.

Additionally, each instrumented pad must use memory to store data collected from its sensors. EX1003, ¶ 123. Each instrumented pad must also include memory that stores the software code to be executed by the microprocessor 19. *Id*. Alternatively, it would have been obvious to include memory for these purposes. *Id*.

g. Limitation 5(f)

See Section X.A.1.h; EX1003, ¶ 125.

h. Limitation 5(g)

See Section X.A.7.

i. Limitation 5(h)

See Section X.A.1.i; EX1003, ¶ 126.

j. Limitation 5(i)

See Section X.A.2; EX1003, ¶ 127.

k. Limitation 5(j)

LeFebvre discloses the use of heuristics, based upon data collected from one or more sensor units, to determine the existence of actual failure conditions. EX1005, ¶¶ [0058]–[0066]; EX1003, ¶ 128. For example, heuristics may be used to identify the existence of wheel damage such as "a flat spot or shelled wheel tread," EX1005, ¶ [0060], or a wheel derailment. EX1005, ¶ [0061]. *See generally* Section X.A.2; Section X.A.5.

l. Limitation 5(k)

LeFebvre discloses the use of heuristics, based upon data collected from one or more sensor units, to predict potential or imminent failures based upon a statistical analysis of the collected data. EX1005, ¶¶ [0058]–[0066]; EX1003, ¶ 130. For example, LeFebvre discloses that heuristics may be used to identify "long term trends" in wheel bearing temperature, "avoiding a potential bearing

burn off and possible derailment." EX1005, ¶ [0058]. LeFebvre additionally discloses that "[s]pecific bearing defects can be inferred from frequency spectrum analysis." EX1005, ¶ [0059]. LeFebvre teaches that "[i]dentifying a failing bearing in its early stages is important in preventative maintenance programs." *Id.*

These and similar heuristics are commonly used in the industry and would have been familiar to a PHOSITA. EX1003, ¶¶ 132–133.

LeFebvre therefore discloses or renders obvious every element of independent claim 5. EX1003, ¶¶ 135–137.

5. Dependent Claim 6

LeFebvre discloses that its instrumented pad (i.e., a "sensor unit") can use heuristics to determine the presence of an "alarm condition." EX1005, ¶¶ [0054]–[0055], [0065]; EX1003, ¶ 139. Specifically, each instrumented pad collects measurements, structures those measurements as a time series, and uses an inference engine (i.e., heuristics) to perform statistical analysis of the measurements and detect actual or potential issues (e.g., truck hunting, swaying, track defects). EX1005, ¶ [0054]; EX1003, ¶ 139. If an issue is detected by the instrumented pad, and "the magnitude is sufficient to cause alarm," a message with the relevant data is passed upstream to the data control unit. EX1005, ¶ [0055]; EX1003, ¶ 139.

LeFebvre therefore discloses or renders obvious every element of claim 6. EX1003, ¶ 140.

6. Dependent Claim 7

See Section X.A.2; Section X.A.5; EX1003, ¶ 141.

7. Dependent Claim 8

a. Limitation 8(a)

In LeFebvre's system, each instrumented pad (i.e., "sensor unit") comprises:

- one or more sensors (s*ee* Section X.A.1.b),
- a power source (s*ee* Section X.A.1.g),
- a processor (s*ee* Section X.A.4.e),
- memory (s*ee* Section X.A.4.f),
- and communications circuitry (s*ee* Section X.A.1.h).

LeFebvre also discloses that each instrumented pad performs various computational functions, such as collecting data from sensors, analyzing it to determine whether an alarm condition exists, and transmitting messages upstream to the data control unit. *See* Section X.A.5; EX1003, ¶ 143. Accordingly, each instrumented pad comprises software that is executed by the microprocessor to carry out these functions. *Id.*; *see also* EX1005, ¶¶ [0034]–[0035], Claim 22. This software would be stored in memory accessible by the microprocessor on the instrumented pad. EX1003, ¶ 143.

b. Limitation 8(b)

LeFebvre manages the power consumption of the instrumented pad by periodically placing the device into a low-power, or "standby," state. EX1005, ¶¶ [0034]–[0035]; EX1003, ¶ 145. "[I]n operation, the microprocessor on an instrumented pad 16 is normally in a passive, low power state, but is programmed to switch on briefly, periodically." EX1005, ¶ [0034]. "[S]hould the pads detect indications of fault or impending failure, the microprocessor on the pad may be programmed to switch on the radio which it controls and send an appropriate message via the radio to data control unit 23." *Id.*, ¶ [0035]. "In the absence of such a problem, the pad microprocessor follows its given schedule which would normally result in its being in a low powered state most of the time." *Id*.

The microprocessor awakens at periodic intervals to process sensor data and, if appropriate, initiate a radio transmission. EX1005, ¶ [0034]; *see also* EX1005, Claim 22 ("each pad having an associated microprocessor, each microprocessor being programmed to a periodically active state to scan the sensed data for indications of potential failure"); EX1003, ¶ 146.

LeFebvre therefore discloses or renders obvious every element of claim 8. EX1003, ¶ 147.

8. Dependent Claim 9

a. Limitation 9(a)

Each instrumented pad collects data from its associated sensors, uses heuristics to analyze the collected data, and determines whether an alarm condition is present. *See* Section X.A.5. A PHOSITA would understand that these functions are carried out by the software that is executed on the microprocessor within each instrumented pad. *See* Section X.A.7.a; EX1005, ¶ 148.

b. Limitation 9(b)

Each instrumented pad contains communications circuitry. *See* Section X.A.1.h. If an issue is detected by the instrumented pad, and "the magnitude is sufficient to cause alarm," a message with the relevant data is passed upstream to the data control unit. EX1005, ¶ [0055]; EX1003, ¶ 149.

c. Limitation 9(c)

See Section X.A.7.b; EX1003, ¶ 150.

LeFebvre therefore discloses or renders obvious every element of claim 9. EX1003, ¶ 151.

9. Dependent Claim 10

See Section X.A.3; EX1003, ¶ 152.

10. Dependent Claim 18

The sensor may be a temperature sensor. *See* Section X.A.1.c. LeFebvre also discloses handbrake sensors (EX1005, ¶ [0065]) and "acceleration, stress, strain pressure, [and] force" sensors. (*id.*, Claim 30). EX1003, ¶ 153.

11. Dependent Claim 20

LeFebvre utilizes a "distributed inference engine" to process and analyze the data collected from sensors on each railcar. EX1005, ¶ [0053]; EX1003, ¶ 155. Specifically, LeFebvre's system "share[s] the essential functions between the microprocessors at the instrumented pads and at the data control unit 23." *Id.* "[P]art of the data analysis is done at the pads and only relevant information is transmitted to the data control unit from the pads for further analysis and recognition of faults." *Id.*

LeFebvre teaches that the presence of an alarm condition may be "inferred" from a statistical analysis of the collected data. EX1005, ¶¶ [0054], [0058]–[0066]; EX1003, ¶ 156. For example, with respect to wheel bearing temperature, LeFebvre's instrumented pad "monitors relative changes in temperature against other bearings and provides an alarm threshold or long term trends to link to bearing condition." EX1005, ¶ [0058]. More generally, LeFebvre teaches that data collected from sensors can be compared with statistical models to infer the presence of bearing defects (¶ [0059]), wheel defects (¶ [0060]), wheel derailment

(¶ [0061]), truck hunting (¶ [0062]), a displaced roller bearing adapter (¶ [0064]), and brake performance and status (¶ [0065]), among others. A PHOSITA would therefore understand that LeFebvre's system makes a *comparison* between (a) the statistical model (i.e., the expected trend) and (b) the actual data, and raises an alarm if the actual data falls outside the expected range predicted by the model. EX1003, ¶ 156.

LeFebvre therefore discloses or renders obvious every element of claim 20. EX1003, ¶ 157.

12. Dependent Claim 21

LeFebvre teaches that the condition of a wheel bearing may be determined by "monitor[ing] relative changes in temperature against other bearings and provid[ing] an alarm threshold or long term trends to link to bearing condition." EX1005, ¶ [0058]. To generate a "long term trend," recently collected data must, necessarily, be compared with data collected during one or more earlier, predetermined time periods. EX1003, ¶ 158. A PHOSITA would therefore understand that LeFebvre's system makes a *comparison* between (a) previously collected data and (b) currently collected data, and raises an alarm if the currently collected data falls outside the expected range predicted by the "long term trend." EX1003, ¶ 159.

LeFebvre therefore discloses that an alarm condition may be determined by comparing currently collected data versus data collected over a predetermined preceding time period. *Id.*

13. Independent Claim 23

a. Claim 23 Preamble

See Section X.A.1.a; EX1003, ¶ 161.

b. Limitation 23(a)

See Section X.A.1.d; EX1003, ¶ 162.

c. Limitation 23(b)

See Section X.A.1.e; EX1003, ¶ 163.

d. Limitation 23(c)

See Section X.A.1.f; EX1003, ¶ 164.

e. Limitation 23(d)

See Section X.A.1.g; EX1003, ¶ 165.

f. Limitation 23(e)

See Section X.A.1.h; EX1003, ¶ 166.

g. Limitation 23(f)

See Section X.A.7.b; EX1003, ¶ 167.

LeFebvre therefore discloses or renders obvious every element of independent claim 23. EX1003, ¶¶ 168–170.

14. Dependent Claim 25

See Section X.A.5; EX1003, ¶ 171.

15. Dependent Claim 26

a. Limitation 26(a)

See Section X.A.2; EX1003, ¶ 172.

b. Limitation 26(b)

See Section X.A.4.k; EX1003, ¶ 173.

c. Limitation 26(c)

See Section X.A.4.l; EX1003, ¶ 174.

16. Dependent Claim 27

a. Limitation 27(a)

The railcar may comprise a second temperature sensor for monitoring the ambient air temperature. EX1005, ¶ [0037]; EX1003, ¶ 176. Specifically, LeFebvre discloses that "if desired, detectors of factors such as ambient temperature and humidity (rain, snow and icing) can be built into the communication device 24 or the data control unit 23." EX1005, ¶ [0037].

b. Limitation 27(b)

LeFebvre teaches that the ambient temperature measurement is incorporated into the "distributed inference engine," which performs statistical analysis of the collected data. EX1005, ¶ [0037]; EX1003, ¶ 178. LeFebvre also discloses that information about the ambient temperature is sent from the data control unit to the

instrumented pads. EX1005, ¶ [0093]; EX1003, ¶ 178. Based upon this disclosure, a PHOSITA would have understood that LeFebvre's system uses the ambient temperature to calibrate the temperature data received from the sensors, as required by claim 27. EX1003, ¶¶ 177, 179. Alternatively, it would have been obvious for a PHOSITA to have incorporated this feature into LeFebvre's system. EX1003, ¶ 179. The ambient (i.e., outdoor) temperature will directly affect the temperature of wheel bearings on a railcar, and a PHOSITA would have understood that this effect should be taken into account in order to reliably collect temperature data from wheel bearings that are exposed to a variety of temperatures and weather conditions. *Id.*

LeFebvre therefore discloses or renders obvious every element of claim 27. EX1003, ¶ 180.

17. Dependent Claim 28

LeFebvre's data control unit (a "communication management unit") transmits data and alarm messages to a remote location. EX1003, ¶ 181.

"[T]he data control unit 23 passes messages on to the communications device 24 for onward transmission to the locomotive or to other remote receivers." EX1005, ¶ [0038]; EX1003, ¶ 182. The data and alarm messages may be transmitted over "a cellular or satellite radio system." *See* Section X.A.1.i; EX1005, ¶ [0025]. *See also* EX1005, Claim 4 ("said data collection, evaluation and

communications means includes a wireless transmitter for transmission of said signals to said remotely located receiver"). The remote receiver may be a central data handling facility in a remote location. EX1005, ¶¶ [0003], [0038], [0095]. EX1003, ¶ 183.

LeFebvre therefore discloses or renders obvious every element of claim 28. EX1003, ¶ 184.

18. Dependent Claim 29

See Section X.A.7.b; EX1003, ¶ 185.

19. Dependent Claim 30

See Section X.A.3; EX1003, ¶ 186.

20. Dependent Claim 31

See Section X.A.7.b; EX1003, ¶ 187.

21. Dependent Claim 32

See Section X.A.17; EX1003, ¶ 188.

B. Ground 2: Claims 13–17, 22, and 24 are unpatentable under 35 U.S.C. § 103(a) over LeFebvre in view of Barone.

A PHOSITA would have found it obvious to combine the disclosures of LeFebvre and Barone. Both references describe systems for wirelessly monitoring railcars, and utilize nearly identical components that function in a similar way. *See generally* EX1003, ¶ 189. Specifically:

- Like LeFebvre, Barone is directed to a system for wirelessly monitoring the condition of railcar wheels and wheel bearings. *See* EX1007, (57) Abstract.
- Like LeFebvre, Barone utilizes a plurality of sensors to monitor the wheels and wheel bearings on each railcar, wherein the sensors are connected using a wireless mesh network. *Id.* In both references, the wireless mesh network preferably conforms to the IEEE 802.15.4 "Zigbee" standard. EX1007, ¶ [0086].
- Like LeFebvre, Barone also discloses that the collected data is analyzed to determine, for example, if a wheel bearing failure is approaching or imminent. EX1007, ¶¶ [0201]–[0220].
- And, like LeFebvre, Barone discloses that if a failure condition is detected, an alert (including the underlying data) is communicated to the locomotive and/or to a central monitoring station in a remote location. EX1007, ¶ [0045].

A PHOSITA therefore would have understood that LeFebvre and Barone are analogous art, because they solve the same problem using the same components in the same way. EX1003, ¶ 190. A PHOSITA would have been motivated to combine the teachings of LeFebvre and Barone for the reasons discussed in detail below with respect to each challenged claim.

1. Dependent Claim 13

a. Limitation 13(a)

LeFebvre discloses that its data control unit (i.e., a CMU) may communicate with a base unit located (i) in the locomotive, and/or (ii) at a central data handling facility in a remote location. EX1005, ¶¶ [0038], [0095]; EX1003, ¶ 193. *See also* EX1005, ¶ [0003] (explaining that a PHOSITA would have been motivated "to monitor and report exceptions to the locomotive or to a central data handling facility as quickly as possible"). The data control unit may communicate with the base unit via "a cellular or satellite radio system." EX1005, ¶ [0025]; EX1003, ¶ 193. *See* Section X.A.17.

b. Limitation 13(b)

LeFebvre discloses that its data control unit (i.e., the CMU) transmits alarms and collected data to the base unit. EX1003, ¶ 194.

LeFebvre's data control unit determines whether "the freight car, its trucks or wheels or axles are behaving sufficiently poorly that a report to the central data handling location or owner or operator or locomotive [i.e., a base unit] is needed. If so, then the report can be sent." EX1005, ¶ [0095].

LeFebvre teaches that because wheel or bearing failures "could lead very quickly to a catastrophic failure of the train," a PHOSITA would have been motivated "to monitor and report exceptions to the locomotive or to a central data

handling facility [i.e., a base unit] as quickly as possible." EX1005, ¶ [0003]. In LeFebvre's system, "[a]n alarm message must get through from any railcar to the locomotive or to the remote data handling service [i.e., a base unit] as quickly as possible, preferably within a few seconds." EX1005, ¶ [0052].

c. Limitation 13(c)

LeFebvre discloses that its base unit displays alarm conditions raised by the CMU. LeFebvre's Claim 23, for example, is directed to "a receiver located in the locomotive for communication of said signals to crew members located within the locomotive." EX1005, Claim 23. In other words: LeFebvre discloses a base unit that is located in the locomotive and displays alarm messages to the locomotive operators. EX1003, ¶ 195.

More generally, LeFebvre teaches that alarm messages regarding severe conditions, such as wheel or bearing failure, should be communicated to the locomotive as quickly as possible—in time for the locomotive operators to take action to stop the train and prevent further (potentially catastrophic) damage. EX1003, ¶ 196; EX1005, ¶¶ [0003], [0052], [0061] ("Identifying when a wheel set has derailed prevents a possible full derailment and possible catastrophic consequences."). Displaying alarm messages within the locomotive is common practice in the industry and would have been obvious to a PHOSITA to enable locomotive operators to quickly take corrective action. EX1003, ¶¶ 196–198.

d. Limitation 13(d)

LeFebvre does not expressly disclose that its base unit determines high level alarms based on data and alarms collected from the CMU.

This feature is disclosed by Barone. In fact, Barone's system includes at least two distinct base units—one located in the locomotive, and one located in a remote location—that process sensor data collected from multiple railcars and determine whether a high level alarm should be raised. EX1003, ¶ 200.

First, Barone's system includes a base unit in the locomotive. EX1007, ¶¶ [0087]–[0089]; EX1003, ¶ 201. The locomotive base unit "is constantly receiving communications from [sensor] nodes" located throughout the train. EX1007, ¶ [0087]. It has access to "an abundance of electrical power," (*id.*, ¶ [0088]), and "interfaces with the existing locomotive computer processor and communication system." *Id.*, ¶ [0087]. The locomotive base unit processes data from the sensor nodes, "displays reports of the data to users in the locomotive itself," and raises "an audible alarm" to alert the locomotive operators of "especially urgent conditions" (i.e., a high level alarm). *Id.*, ¶¶ [0088], [0089]; EX1003, ¶ 201.

Second, Barone's system relays the collected data and alerts to a "central monitoring station" (i.e., another base unit). EX1007, ¶¶ [0036], [0045], [0087]–[0089]; EX1003, ¶ 202. Barone's central monitoring station then applies heuristics

to detect potential or actual failure conditions, assess their severity, and raise a high level alarm if warranted. *Id*. For example, with respect to wheel bearing health, Barone teaches that "[i]f the estimated time to bearing failure permits, a maintenance action can be scheduled. If failure is estimated to be imminent, the train can be diverted or stopped before catastrophic bearing failure and derailment." EX1007, ¶ [0036]. An alarm indicating that the train must be "diverted or stopped" before a catastrophe occurs is a "high level alarm." EX1003, ¶ 202.

Both LeFebvre and Barone disclose numerous heuristics for analyzing sensor data and detecting severe conditions that may warrant a high level alarm. *See* Section X.A.2; EX1007, ¶¶ [0037]–[0041]. A PHOSITA would have had ***at least two independent reasons*** to apply one or more of these heuristics to the sensor data collected at LeFebvre's base unit. EX1003, ¶ 203.

First, because a CMU (i.e., LeFebvre's data control unit) has access to data from only a single railcar, but LeFebvre's base unit collects data from *multiple* railcars (*see* Section X.B.2, *infra*), the base unit has the ability to detect dangerous conditions that could not be observed by any single CMU. EX1003, ¶ 204. As an illustrative example: an issue with the braking system on a ***single*** railcar may be only a minor concern, but a braking issue affecting ***multiple*** railcars could be ***catastrophic***. *Id.* This condition could not be observed by any single CMU, which

only has information regarding the status of a single railcar; but it could ***easily*** be observed by applying heuristics at a base unit with access to data collected from multiple railcars. *Id.* It therefore would have been obvious for a PHOSITA to apply heuristics at LeFebvre's base unit to detect potentially serious issues involving multiple railcars, and to raise a high level alarm if any such issues are detected. *Id.*

Second, by the filing date of the '223 Patent, the benefits of analyzing data collected at a central data handling location had become well-known in the industry. EX1003, ¶ 205. For example, Azzaro recognized—as early as 2000—that "[w]ith today's advances in computing technology, the large amount of data collected from a fleet of locomotives can be properly aggregated and analyzed." EX1010, 2:24–34. A PHOSITA would therefore have been motivated to apply heuristics to data collected at LeFebvre's central data handling location, which—unlike LeFebvre's sensor node or data control unit—has the computational resources necessary to process large amounts of data in a timely manner. EX1003, ¶ 206.

LeFebvre, in view of Barone, therefore renders obvious every element of claim 13. EX1003, ¶ 207.

2. Dependent Claim 14

LeFebvre discloses a system comprising a multiplicity of data control units—one per railcar. *See* Section X.A.1.i; EX1003, ¶ 208. Each data control unit

(i.e., each CMU) communicates wirelessly with a base unit, which may be either on the locomotive or in a remote location. *See* Section X.B.1.a; EX1003, ¶ 209. LeFebvre therefore describes a base unit—either on the locomotive, or at a remote location—that communicates wirelessly with multiple CMUs. EX1003, ¶ 210.

LeFebvre, in view of Barone, therefore renders obvious every element of claim 14. EX1003, ¶ 211.

3. Dependent Claim 15

LeFebvre does not expressly disclose that the base unit uses "distributed event processing" to perform "trend analysis."

The use of trend analysis was widely known in the art prior to the effective filing date of the '223 Patent. EX1003, ¶ 213. Barone states that "true trending analysis … has been widely acclaimed in the literature … as leading to vastly improved failure prediction capability." EX1007, ¶ [0042]; EX1003, ¶ 214.

Barone itself uses trend analysis at the central monitoring station (i.e., a base unit): the system "reports critical situations back to the central monitoring station, thus allowing continuous monitoring and true trending data analysis." EX1007, ¶ [0045]. A PHOSITA therefore would have been motivated to perform trend analysis on the data collected at LeFebvre's base unit due to the "vastly improved failure prediction capability" that it provides. EX1003, ¶ 215.

LeFebvre, in view of Barone, therefore discloses or renders obvious every element of claim 15. EX1003, ¶ 216.

4. Dependent Claim 16

See Section X.B.1.d; Section X.B.2; EX1003, ¶ 217.

5. Dependent Claim 17

LeFebvre's data control unit may communicate with a remote (off-train) base unit via, for example, "a cellular or satellite radio system." EX1005, ¶ [0025]; EX1003, ¶ 218. *See also* Section X.A.1.i.

LeFebvre therefore discloses or renders obvious every element of claim 17. EX1003, ¶ 219.

6. Dependent Claim 22

A system meets the limitations of claim 22 if an alarm is raised based on *any one* of criteria (a) through (e). EX1003, ¶ 220. Criteria (a) through (e) recited in claim 22 are well-known, conventional heuristic techniques that would have been obvious to a PHOSITA. *Id*.

For example, LeFebvre teaches that "[t]rack defects can generate ***large and sudden*** forces in the wheels, bearings and truck." EX1005, ¶ [0054]. A PHOSITA would have understood that a measured force may be considered "large" if its standard deviation exceeds a predetermined threshold (i.e., if it rises significantly above the "normal" forces experienced by a moving railcar). EX1003, ¶ 221.

Likewise, a PHOSITA would have understood that the appearance of a force may be considered "sudden" if the rate of change in the measured value exceeds a predetermined threshold. *Id.* LeFebvre therefore discloses raising an alarm based upon criteria (d) and (e). *Id*.

To whatever extent this limitation is not expressly disclosed by LeFebvre, Barone discloses that "[w]hen a railroad wheel bearing is very near catastrophic failure the temperature rapidly increases," and that an alert should therefore be raised when "the temperature rate of change exceeds a pre-selected threshold trigger value." EX1007, ¶ [0253]; EX1003, ¶ 222. This corresponds to criteria (e) of claim 22. *Id*. A PHOSITA would have been motivated to modify LeFebvre's system (to extent necessary) to apply this heuristic, because Barone teaches it is effective to detect wheel bearings that are "very near catastrophic failure." *Id.*

LeFebvre, in view of Barone, therefore discloses or renders obvious every element of claim 17. EX1003, ¶ 223.

7. Dependent Claim 24

LeFebvre does not expressly disclose that its temperature sensor is "disposed outside of and spaced from" the housing of the instrumented pad as required by claim 24.

This feature is taught by Barone. EX1003, ¶ 225. Specifically, in Barone's sensor device, "[t]he sensor portion 259 is pressed into engagement with the actual end cap 281 of the wheel assembly 140 as shown in FIG. 28." EX1007, ¶ [0103].

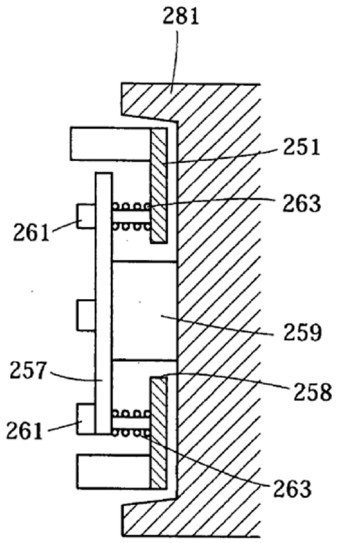

FIG. 28

This design ensures that "the engagement is firm and the temperature, acceleration, and acoustic data is as reliable as possible." *Id.* A PHOSITA would have modified LeFebvre's sensor devices to include an external temperature sensor, as taught by Barone, to obtain the most accurate and reliable temperature readings. EX1003, ¶ 226.

LeFebvre, in view of Barone, therefore discloses or renders obvious every element of claim 24. EX1003, ¶ 227.

C. Ground 3: Claims 1 and 24 are unpatentable under 35 U.S.C. § 103(a) over LeFebvre in view of Denny and Provasnik.

LeFebvre does not expressly disclose the "external temperature sensor" limitations of claims 1 and 24. These limitations, however, would have been obvious to a PHOSITA based on the general knowledge in the art. EX1003, ¶ 228. Denny and Provasnik, discussed in detail below, are exemplary prior art references that illustrate the general knowledge possessed by a PHOSITA. *Id. See Koninklijke Philips N.V. v. Google LLC*, 948 F.3d 1330, 1337−1338 (Fed. Cir. 2020).

LeFebvre, Denny, and Provasnik are analogous art. All three references are directed to devices for monitoring the temperature of metallic mechanical components—specifically, wheel bearings (LeFebvre and Denny) and engines (Provasnik). EX1003, ¶ 229. Denny (EX1008) provides evidence that external temperature sensors are standard components, commonly used in industrial applications, and provide advantages that would have been clearly understood by a PHOSITA. *Id*. Similarly, Provasnik (EX1009) provides evidence that magnetic sensor attachments are standard components, commonly used in industrial applications, and provide advantages that would have been clearly understood by a PHOSITA. *Id.*

As discussed in detail below, a PHOSITA would therefore have been motivated to modify LeFebvre's instrumented pad to include an external

temperature sensor with a magnetic attachment. EX1003, ¶ 230.

1. Independent Claim 1

a. Claim 1 Preamble

See Section X.A.1.a; EX1003, ¶ 231.

b. Limitation 1(a)

See Section X.A.1.d; EX1003, ¶ 232.

c. Limitation 1(b)

See Section X.A.1.c; EX1003, ¶ 233.

d. Limitation 1(c)

See Section X.A.1.f; EX1003, ¶ 234.

e. Limitation 1(d)

See Section X.A.1.g; EX1003, ¶ 235.

f. Limitation 1(e)

LeFebvre does not expressly disclose a temperature sensor that is external to the housing of the instrumented pad. However, there are only two possible locations for a temperature sensor—inside the housing, or outside the housing—and both options have advantages that would have been fully understood by a PHOSITA. EX1003, ¶ 236.

A PHOSITA would have understood that it is advantageous to locate a temperature sensor close to the part of the railcar whose temperature is to be measured. EX1003, ¶ 237. Additionally, a PHOSITA would have understood that

sensitive electronic components, such as microprocessors, should not be directly exposed to high temperatures. EX1003, ¶ 238.

Denny (EX1008) illustrates the general knowledge in the art with respect to these concepts. *See* Section V.4; EX1003, ¶ 237. Denny states the obvious fact that "[i]n order to obtain an accurate high temperature reading of a wheel assembly, the temperature sensor … should, preferably, extend deep into the wheel assembly." EX1008, 2:24–27. Conversely, Denny explains that its sensor housing 12, which includes electronic circuitry, "is situated away from the outer surface of the wheel assembly so that the electronic circuit will not be subjected to heat from the wheel assembly and may freely dissipate heat produced by its own components." EX1008, (57) Abstract.

A PHOSITA therefore would have been motivated to equip LeFebvre's instrumented pad with an external temperature sensor, which would allow for more accurate measurement of a high-temperature railcar component (e.g., a wheel bearing) that is not in direct contact with the instrumented pad. EX1003, ¶ 239.

LeFebvre does not describe the manner in which the temperature sensor is attached to the railcar. However, numerous means for attaching sensors (e.g., temperature sensors) to substrates were known in the art. EX1003, ¶ 240. In particular, a PHOSITA would have understood that a magnet could be used to

attach a temperature sensor to a metallic substrate (e.g., a wheel bearing or other metallic portion of a railcar). *Id.*

Provasnik identifies the obvious advantage of using a magnet: it permits the sensor to be readily attached to, and removed from, the metallic substrate. EX1009, 1:8–15, 1:38–44, 4:65-68; EX1003, ¶ 241.

Accordingly, it would have been obvious for a PHOSITA to equip LeFebvre's instrumented pad with an external temperature sensor, and to use a magnet to attach the external temperature sensor to a metallic portion of a railcar (e.g., a wheel bearing) where temperature monitoring was desired. EX1003, ¶ 242.

g. Limitation 1(f)

See Section X.A.1.h; EX1003, ¶ 243.

h. Limitation 1(g)

See Section X.A.7.b; EX1003, ¶ 244.

LeFebvre, in view of Denny, Provasnik, and the general knowledge possessed by a PHOSITA, therefore renders obvious every element of independent claim 1. EX1003, ¶ 245.

2. Dependent Claim 24

See Section X.C.1.f; EX1003, ¶ 246.

D. Ground 4: Claims 2, 3, and 26–28 are unpatentable under 35 U.S.C. § 103(a) over Armitage.

As explained in detail below, a PHOSITA would understand that Armitage discloses every element of claims 2, 3, and 26–28. Petitioner believes these claims are anticipated by Armitage under 35 U.S.C. § 102.

Armitage, however, does not *expressly* state that all disclosed limitations are part of a *single embodiment*. Petitioner has therefore elected to present this ground under 35 U.S.C. § 103. *See Realtime Data*, 912 F.3d at 1373 ("a disclosure that anticipates under § 102 also renders the claim invalid under § 103") (cleaned up).

1. Independent Claim 2

a. Claim 2 Preamble

This preamble merely describes an intended use of the system, which does not instill patentable weight. *Pitney Bowes*, 182 F.3d at 1305. To the extent that the preamble is limiting, Armitage discloses "a mobile railway car monitoring system." EX1006, (57) Abstract; EX1003, ¶ 251.

Armitage's system is extremely similar to that of the '223 Patent. Compare Figure 1 of Armitage:

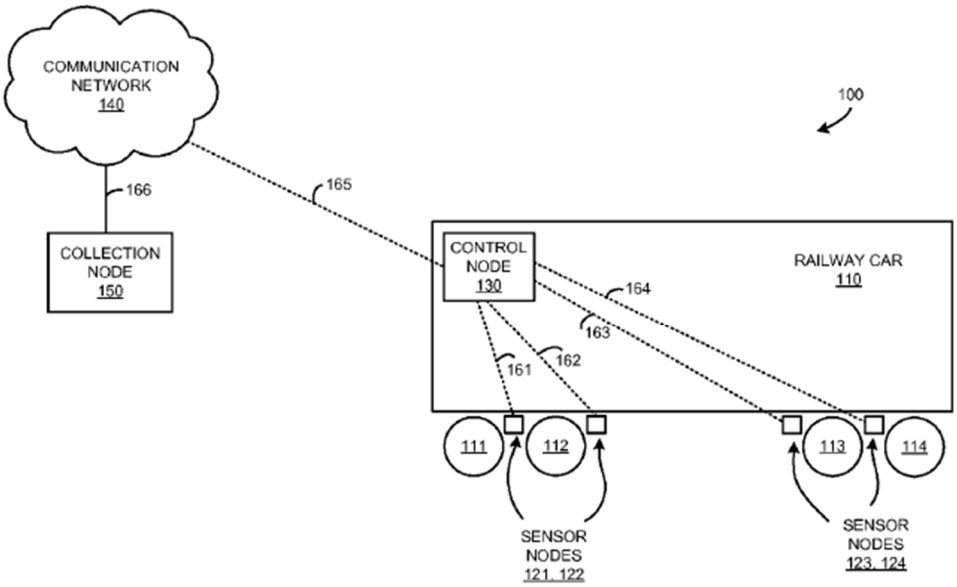

FIGURE 1

with Figure 6 of the ’223 Patent, reproduced below.

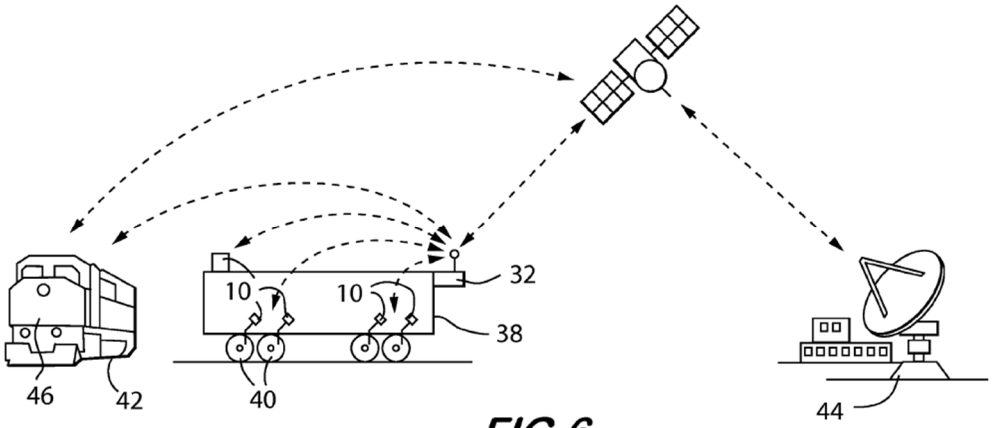

FIG.6

b. Limitation 2(a)

Armitage discloses a “mobile railway car monitoring system [including] a plurality of sensor nodes coupled to an undercarriage portion of a railway car.” EX1006, ¶ [0004]. The sensor nodes are separate from one another, and each node is attached to the railcar. EX1006, ¶ [0012]. Figure 1 of Armitage depicts an

exemplary embodiment with four sensor nodes 121–124 attached to a railcar 110. *Id.*; EX1003, ¶ 252.

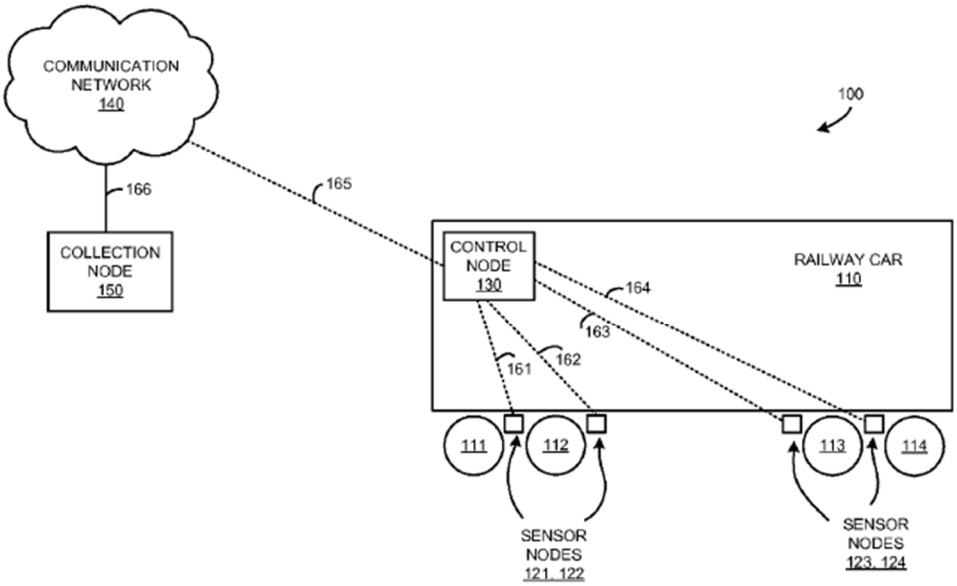

FIGURE 1

"Sensor nodes 121-124 each include equipment to sense and report information about undercarriage elements of a railway car." EX1006, ¶ [0014]. Each sensor node "includes a sensor portion" that "could include thermometers" or "other sensing equipment and circuitry." *Id.*

Figure 3 of Armitage depicts an exemplary embodiment similar to that of Figure 1, but with ***eight*** sensor nodes 320-327 attached to a railcar 310—specifically, one attached to each wheel assembly. EX1006, ¶¶ [0033]–[0034], Fig. 3. Sensor nodes 320-327 otherwise have identical features as described above for nodes 121-124. EX1006, ¶ [0033]; EX1003, ¶ 254.

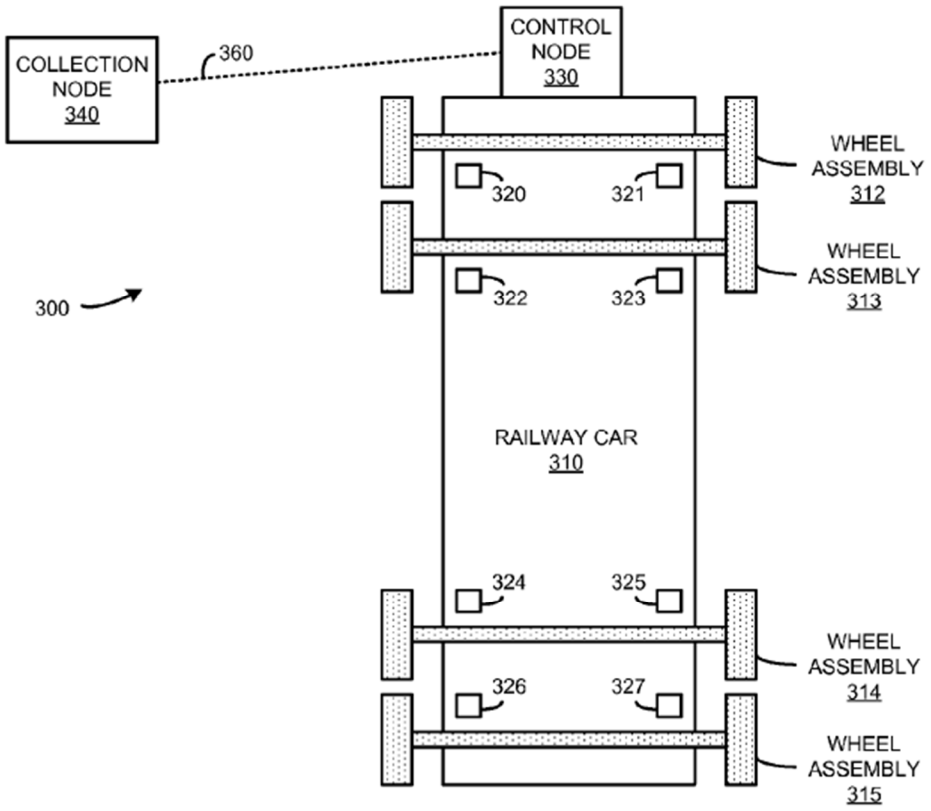

FIGURE 3

Other than the number of sensor nodes and their precise locations, the embodiments depicted in Figures 1 and 3 of Armitage are largely identical. EX1003, ¶ 255. A PHOSITA would have understood that features described with reference to an element of Figure 1 are also applicable to the corresponding element of Figure 3, and *vice versa*. *Id.*

c. Limitation 2(b)

Armitage's sensor node may comprise a temperature sensor. EX1006, ¶¶ [0014], [0033], [0056]; EX1003, ¶ 257.

d. Limitation 2(c)

The sensor nodes "could each be encased in a potted, weatherproof, or sealed enclosure, or may have openings for air circulation." EX1006, ¶ [0034]; *id.*, ¶ [0015]. The sensor nodes may be mounted on the railcar using mechanical fasteners, adhesive methods, or magnets. EX1006, ¶¶ [0015], [0034]; EX1003, ¶ 259.

e. Limitation 2(d)

Each sensor node is "coupled to an undercarriage portion of a railway car," EX1006, ¶ [0004], "such as a wheel, axle, gearbox, bearing, bearing box, journal box, trucks, brakes, or other equipment." EX1006, ¶ [0013]. "The information monitored could include undercarriage element temperature," among other parameters. EX1006, ¶ [0025]. Armitage thus discloses a temperature sensor in thermal communication with an undercarriage element that is outside the sensor housing. EX1003, ¶ 261.

f. Limitation 2(e)

Armitage's sensor node comprises electrical circuitry that processes data received from the sensors. EX1003, ¶ 263. Specifically, each sensor node "include[s] a processing portion for receiving the sensor information, amplifying, scaling, modifying, adjusting, digitizing, or converting the sensor information, as well as controlling the transceiver portion and sensor portions." EX1006, ¶ [0014].

An exemplary embodiment is provided in Figure 6, which "is a block diagram illustrating sensor node 600, as an example of sensor nodes 121-124 found in FIG. 1 or sensor nodes 320-327 found in FIG. 3." EX1006, ¶ [0053]. Figure 6 depicts "processing system 620" within the sensor node 600. *Id.* Processing system 620 "comprises specialized circuitry," i.e., electrical circuitry, which operates to "process the sensor information." EX1006, ¶ [0055]. A PHOSITA would understand—and Figure 6 confirms—that in Armitage's system, this electrical circuitry may be positioned within the sensor node's housing. EX1003, ¶ 264; *see also* Section X.D.1.d.

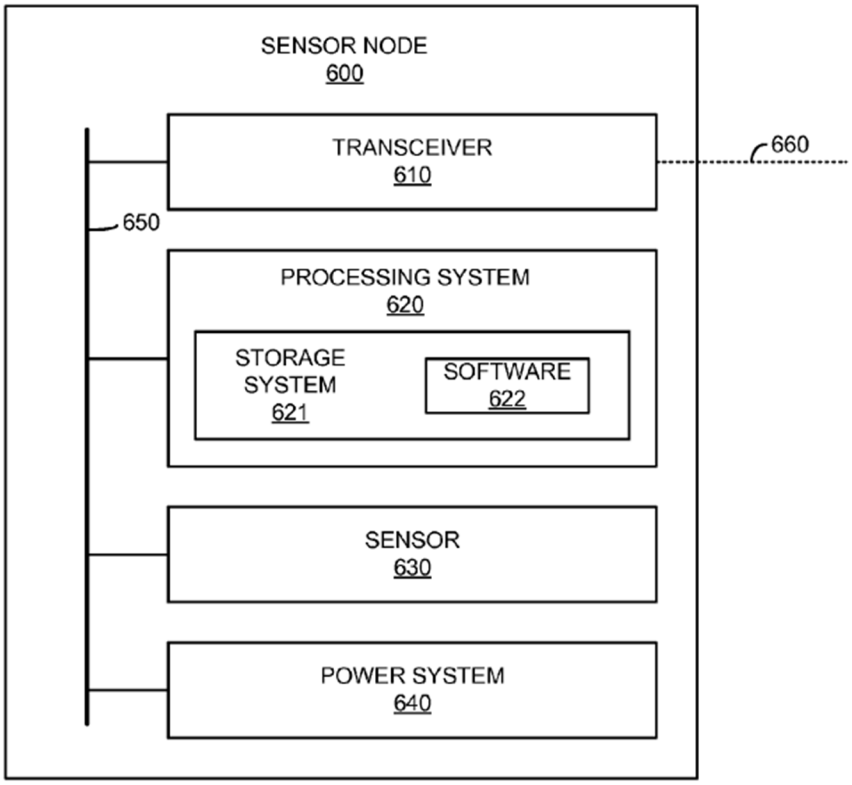

FIGURE 6

g. Limitation 2(f)

"Each of sensor nodes 121-124 could also comprise a power system, such as a battery or solar cell." EX1006, ¶ [0014]. *See also* EX1006, ¶ [0033].

A specific example is provided by the embodiment of Figure 6, where "[p]ower system 640 includes circuitry and a power source to provide power to the elements of sensor node 600." EX1006, ¶ [0057]; EX1003, ¶ 266.

h. Limitation 2(g)

Each sensor node comprises a wireless transceiver for communicating with the control node. EX1006, ¶ [0014] ("the transceiver portion includes a wireless transceiver and antenna for wirelessly communicating with control node 130"). *See also* EX1006, ¶¶ [0033], [0054]; EX1003, ¶ 268. Specifically, each sensor node may be configured to "transfer the processed sensor information to control node 130." EX1006, ¶ [0026]. As discussed above, the sensor may be a thermometer. *See* Section X.D.1.c.

Additionally, a PHOSITA would understand—and Figure 6 confirms—that in Armitage's system, the wireless transceiver may be positioned within the sensor node's housing. EX1003, ¶ 269; *see also* EX1006, Fig. 6 (depicting transceiver 610 located within sensor node 600).

Armitage's sensor node thus includes a communication device located within the housing and capable of wirelessly broadcasting information regarding

the temperature sensed. EX1003, ¶ 270.

i. Limitation 2(h)

Armitage's system includes a "control node" (i.e., a communication management unit) on each railcar. EX1006, ¶¶ [0004], [0012], Figs. 1, 3, 5; EX1003, ¶ 271.

The control node communicates wirelessly with each sensor node on the same railcar. For example, in the embodiment of Figure 1, control node 130 communicates with each of sensor nodes 121–124 via wireless links 161–164, respectively. EX1003, ¶ 272. The wireless links can utilize, for example, WiFi or Bluetooth, both of which provide two-way communications. EX1006, ¶ [0021]; EX1003, ¶ 272.

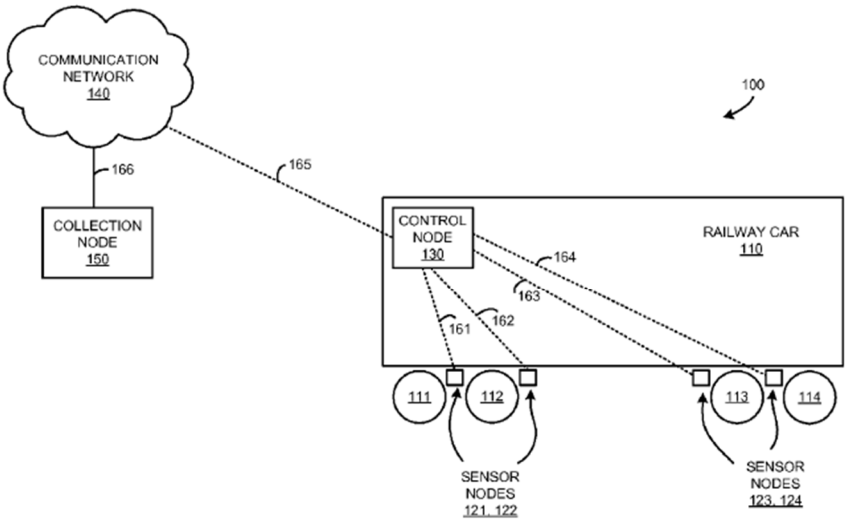

FIGURE 1

Control node 130 is also capable of broadcasting information upstream to communication network 140 over wireless link 165. EX1006, ¶ [0022]. Armitage

identifies WiFi, cellular networks (e.g., LTE, GSM, or CDMA), and satellite networks (e.g., Iridium) as examples of the wireless communications technologies that may be employed in wireless link 165, all of which provide two-way communications. *Id.* EX1003, ¶ 273.

Armitage therefore discloses every element of independent claim 2. EX1003, ¶ 275.

2. Dependent Claim 3

Armitage discloses a communications management unit—specifically, a "control node" on each railcar—that (a) collects data from a plurality of sensor devices located on the same railcar, and (b) uses heuristics to determine actual, potential, or imminent failures based on a statistical analysis of the collected data. EX1003, ¶ 276.

As discussed above, each sensor node contains one or more sensors that collect data about the railcar, *see* Section X.D.1.b, and wirelessly transmit that data to the control node. *See* Section X.D.1.c; EX1003, ¶ 277. The control node collects this data and analyzes it to determine whether a fault condition is present. Specifically:

> "The information received could include sensor information, or modified sensor information, from each of sensors 121-124 received over wireline or wireless links.

> Control node 130 processes (204) the information to determine a fault condition for the undercarriage portion."

EX1006, ¶ [0027]. If a fault condition is detected, the control node wirelessly reports it (i.e., sends an alarm message) to a collection system. EX1006, ¶ [0028]; EX1003, ¶ 277.

Armitage describes the use of heuristics to determine both the presence and nature of a fault condition. For example, Armitage discloses that "[a] single wheel sensor anomaly might … indicate a 'wheel out of round' or 'flat spot' condition, where a non-round geometry of a wheel can cause vibrations or shocks at a certain portion of each rotation of a wheel." EX1006, ¶ [0042]. Conversely, "outliers for sensor nodes on an entire side of railway car 310 could indicate a cornering failure, or an off-track condition." *Id.* A PHOSITA would understand that these are examples of heuristics. EX1003, ¶ 278.

The control node can also perform statistical analysis on the collected data to detect failure conditions. EX1003, ¶ 279. For example, the control node can "process the sensor information to determine anomalies from an average, such as an anomaly from a running average of the temperature of all wheels on a railway car." EX1006, ¶ [0029]. Armitage also discloses the use of a "moving average and trend analysis" to detect "statistically significant deviations" that are indicative of

failure. EX1006, ¶ [0030]. *See also* EX1006, ¶ [0045] (describing "time series analysis" and statistical sampling of accelerometer data).

Armitage also indicates that its system can distinguish between potential failures (which warrant maintenance) and actual failures (which require immediate service). EX1003, ¶ 280; EX1006, ¶ [0044] (describing a "health scorecard" that distinguishes "yellow condition[s]" from "red condition[s]").

Armitage therefore discloses every element of claim 3. EX1003, ¶ 281.

3. Dependent Claim 26

See Section X.D.2; EX1003, ¶ 329.

4. Dependent Claim 27

a. Limitation 27(a)

Each sensor node may include a sensor for monitoring the ambient air temperature. EX1006, ¶ [0025] ("The information monitored could include … ambient temperature"); *id.*, ¶ [0029] ("the ambient temperature or weather conditions could be evaluated"); EX1003, ¶ 330.

b. Limitation 27(b)

Armitage recognizes that "sensor information can be affected by ambient temperature." EX1006, ¶ [0029]. This fact would have been well-understood by a PHOSITA. EX1003, ¶ 331.

Armitage further states that "the ambient temperature or weather conditions" should be evaluated to determine whether an anomaly is present in an undercarriage element. EX1006, ¶ [0029]; EX1003, ¶ 332. A PHOSITA would thus understand that, in Armitage's system, information collected from temperature sensors should be calibrated—taking ambient temperature and weather into account—before reporting a fault condition or raising an alarm. *Id*.

More generally, a PHOSITA would have understood that information about ambient temperature is useful to calibrate readings from temperature sensors, particularly in an outdoor environment. *See* Section X.A.16.b; EX1003, ¶ 333.

Armitage therefore discloses or renders obvious every element of claim 27. EX1003, ¶ 334.

5. Dependent Claim 28

Armitage discloses that the control node on each railcar (i.e., a CMU) wirelessly transmits information, such as sensor data and alarm messages, to a collection node (i.e., a base unit). *See* Section X.E.13.a, Section X.E.13.b; EX1003, ¶ 335.

Armitage further discloses that the collection node can be in a remote location located off of the train. As one example, the collection node can be "a rail-side or handheld device." EX1006, ¶ [0039]; EX1003, ¶ 336. Alternatively, the collection node may comprise "application servers," "web servers," and other

computing equipment. EX1006, ¶¶ [0019], [0039]. A PHOSITA would understand that "rail side" devices, "web servers," and "application servers" would not be located on the train. EX1003, ¶ 336.

Armitage therefore discloses or renders obvious every element of claim 28. EX1003, ¶ 337.

E. Ground 5: Claims 4–10, 13–18, 20–23, 25, and 29–32 are unpatentable under 35 U.S.C. § 103(a) over Armitage in view of LeFebvre.

A PHOSITA would have found it obvious to combine the disclosures of Armitage and LeFebvre. The references describe very similar systems for monitoring railcars, which contain nearly identical components that function in a similar way. EX1003, ¶ 339. Specifically:

- Like Armitage, LeFebvre is directed to a system for wirelessly monitoring the condition of railcar wheels and wheel bearings. *See* EX1005, (57) Abstract.
- Like Armitage, LeFebvre utilizes a plurality of sensors to monitor the wheels and wheel bearings on each railcar, wherein the sensors communicate wirelessly with a control unit located on the railcar. *Id.*
- Like Armitage, LeFebvre also discloses that the collected data is analyzed to determine, for example, if a wheel bearing failure is approaching or imminent. EX1005, ¶¶ [0058]–[0059].

- And, like Armitage, LeFebvre discloses that if a failure condition is detected, an alert (including the underlying data) is wirelessly transmitted to a data processing system in a remote location. EX1005, ¶¶ [0038], [0052].

A PHOSITA therefore would have understood that Armitage and LeFebvre are analogous art. EX1003, ¶ 340. A PHOSITA would have been motivated to combine the teachings of Armitage and LeFebvre for the reasons discussed in detail below with respect to each challenged claim.

1. Dependent Claim 4

Armitage does not expressly disclose that each sensor device is capable of exchanging data with other sensor devices. This limitation would be satisfied by the use of a wireless mesh network, which is a networking configuration where each device communicates with two or more other devices. EX1003, ¶ 341.

LeFebvre discloses that its sensor nodes may be connected to the CMU using a mesh networking protocol. *See* Section X.A.3; EX1003, ¶ 342. A PHOSITA would have understood that mesh networking provides certain advantages relative to point-to-point protocols such as Bluetooth or WiFi. *Id*. Most significantly, a mesh network allows sensor nodes to be placed in locations where they could not communicate with the CMU directly (e.g., due to interference). *Id.* For at least this reason, a PHOSITA would have been motivated to modify

Armitage to use a wireless mesh network to connect the sensor devices and the control node, as disclosed by LeFebvre. *Id.*

Armitage, in view of LeFebvre, therefore renders obvious every element of claim 4. EX1003, ¶ 343.

2. Dependent Claim 6

Armitage does not expressly state that its sensor devices can determine an alarm condition. LeFebvre, however, describes this limitation in detail. *See* Section X.A.5.

In view of LeFebvre, a PHOSITA would have understood that the burden of transmitting all data collected from the sensors is "extremely large," and that to "reduce the radio traffic to manageable proportions," it is desirable to have the sensor devices "[look] for signs of trouble and then send only essential indicative information" upstream to the control node. EX1005, ¶ [0053]; EX1003, ¶ 344.

A PHOSITA would have been motivated to modify Armitage's sensor devices to include the ability to monitor sensor data and determine alarm conditions, as disclosed by LeFebvre. EX1003, ¶ 344.This modification would have had an obvious and predictable benefit—specifically, it would reduce the amount of data, and radio traffic, that must be transmitted from the sensor devices to the control unit on each railcar. *Id*.

3. Dependent Claim 8

a. Limitation 8(a)

In Armitage's system, each sensor node comprises:

- one or more sensors (s*ee* Section X.D.1.b),
- a power source (s*ee* Section X.D.1.g),
- a processor (s*ee* Section X.D.1.f),
- memory (s*ee* Section X.E.11.f),
- and communications circuitry (s*ee* Section X.D.1.h). EX1003, ¶ 346.

Armitage also discloses that each sensor node comprises software. EX1006, ¶ [0055] ("Processing system 620 retrieves and executes software 622 from storage system 621."); EX1003, ¶ 347.

b. Limitation 8(b)

As discussed in detail above, this feature is disclosed by LeFebvre. *See* Section X.A.7.b; EX1003, ¶ 349.

More generally, the power-saving scheme described by LeFebvre (where an electronic device enters a sleep mode to save power, and awakens periodically to collect data, perform computations, and transmit data over a network) was a well-known, standard practice prior to the priority date of the '223 Patent. EX1003, ¶ 350. A PHOSITA would have incorporated this well-known feature into

Armitage's sensor nodes because—as LeFebvre explains—it saves power. EX1005, ¶¶ [0034]–[0035]; EX1003, ¶ 350.

Armitage, in view of LeFebvre, therefore discloses or renders obvious every element of claim 8. EX1003, ¶ 351.

4. Dependent Claim 9

a. Limitations 9(a) and 9(b)

Armitage does not expressly state that its sensor devices can assess the collected sensor data to determine an alarm condition. However, as discussed above with respect to claim 6, it would have been obvious in view of LeFebvre to modify Armitage's sensor nodes to include this functionality. *See* Section X.E.2; EX1003, ¶ 352.

b. Limitation 9(c)

See Section X.E.3.b; Section X.A.7.b; EX1003, ¶ 353.

5. Dependent Claim 10

See Section X.E.1; EX1003, ¶ 354.

6. Independent Claim 23

a. Claim 23 Preamble

See Section X.D.1.a; EX1003, ¶ 355.

b. Limitation 23(a)

See Section X.D.1.d; EX1003, ¶ 356.

c. Limitation 23(b)

See Section X.D.1.e; EX1003, ¶ 357.

d. Limitation 23(c)

See Section X.D.1.f; EX1003, ¶ 358.

e. Limitation 23(d)

See Section X.D.1.g; EX1003, ¶ 359.

f. Limitation 23(e)

See Section X.D.1.h; EX1003, ¶ 360.

g. Limitation 23(f)

See Section X.E.3.b; EX1003, ¶ 361.

Armitage, in view of LeFebvre and the general knowledge possessed by a PHOSITA, therefore discloses or renders obvious every element of independent claim 23. EX1003, ¶ 362.

7. Dependent Claim 25

See Section X.E.2; EX1003, ¶ 363.

8. Dependent Claim 29

See Section X.E.3.b; EX1003, ¶ 364.

9. Dependent Claim 30

See Section X.E.1; EX1003, ¶ 365.

10. Dependent Claim 31

See Section X.E.3.b; EX1003, ¶ 366.

11. Independent Claim 5

a. Claim 5 Preamble

See Section X.D.1.a; EX1003, ¶ 282.

b. Limitation 5(a)

See Section X.D.1.b; EX1003, ¶ 283.

c. Limitation 5(b)

See Section X.D.1.c; EX1003, ¶ 284.

d. Limitation 5(c)

See Section X.D.1.g; EX1003, ¶ 285.

e. Limitation 5(d)

See Section X.D.1.f; EX1003, ¶ 286.

f. Limitation 5(e)

Each sensor node may comprise a processing system for receiving, processing, and transmitting information received from the sensors. *See* Section X.D.1.f; EX1003, ¶ 287. The processing system includes a storage system comprising at least one "memory device." EX1006, ¶ [0055]. Additionally, the processing system must include working memory, or RAM, that stores state information for the software being executed. EX1003, ¶ 288.

g. Limitation 5(f)

See Section X.D.1.h; EX1003, ¶ 290.

h. Limitation 5(g)

See Section X.E.3.

i. Limitation 5(h)

See Section X.D.1.i; EX1003, ¶ 291.

j. Limitation 5(i), 5(j), and 5(k)

See Section X.D.2; EX1003, ¶ 292.

Armitage therefore discloses every element of independent claim 5. EX1003, ¶ 293.

12. Dependent Claim 7

See Section X.D.2; EX1003, ¶ 294.

13. Dependent Claim 13

a. Limitation 13(a)

Armitage discloses that its control node (i.e., a CMU) communicates with a "collection system" or "collection node." EX1006, ¶¶ [0004], [0019]–[0020], [0038], Fig. 1. A PHOSITA would understand that Armitage's "collection system" or "collection node" is a "base unit" in the parlance of the '223 Patent. EX1003, ¶ 295.

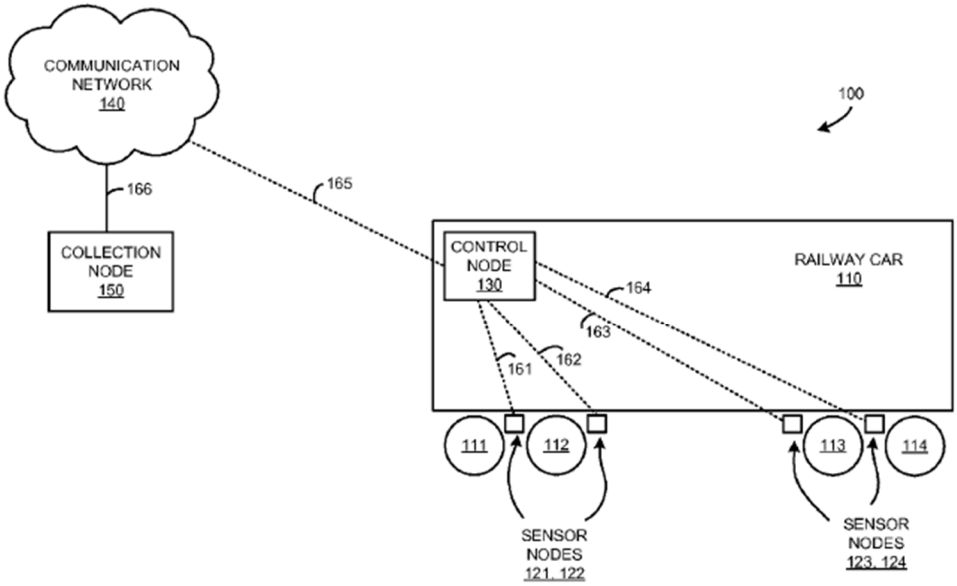

FIGURE 1

"In the example shown in FIG. 1, collection node 150 communicates with control node 130 through communication network 140." EX1006, ¶ [0020]. Information from control node 130 is broadcast to communication network 140 over wireless link 165. EX1006, ¶ [0022]. Armitage identifies WiFi, cellular networks (e.g., LTE, GSM, or CDMA), and satellite networks (e.g., Iridium) as examples of the wireless communications technologies that may be employed in wireless link 165. *Id.*[7] EX1003, ¶ 296.

Communications network 140, which can itself comprise one or more "wireless communication systems," then routes the information to collection node

[7] The embodiment depicted in Figure 3 is substantially identical to that of Figure 1, and similarly includes a control node 330 (i.e., a CMU) that communicates with a collection node 340 (i.e., a base unit) over a wireless link 360. [Armitage], ¶¶ [0037]–[0038], Fig. 3; EX1003, ¶ 297.

150 (i.e., a "base unit"). EX1006, ¶ [0018]; EX1003, ¶ 298.

"Collection node 150 could collect fault conditions and other information from many control nodes." EX1006, ¶ [0020]; EX1003, ¶ 299. For example, "[c]ollection node 150 could receive information from each control node of the train, and thus monitor the entire train." *Id.*

b. Limitation 13(b)

Armitage discloses that the control unit (i.e., the CMU) transmits alarms and collected data to the base station. EX1003, ¶ 300. Specifically, "[c]ollection node 150 comprises equipment for receiving ***fault conditions, sensor information***, location information, or other information from control node 130." EX1006, ¶ [0019] (emphasis added). *See also* EX1006, ¶ [0037].

c. Limitation 13(c)

The collection node (i.e., the base unit) can include a user interface for displaying the status of the control node, or information received from the sensor nodes, to a user. EX1003, ¶ 301. Specifically, "[c]ollection node 340 could include a user interface for displaying a status of control node 330 or sensor nodes 320-327 to a user." EX1006, ¶ [0039]. A PHOSITA would understand that "displaying a status" means displaying an alarm condition, if present. EX1003, ¶ 301.

More generally, a PHOSITA would understand that to be useful, the alarm message must be displayed. *See* Section X.B.1.c; EX1003, ¶ 302. Because

Armitage's collection node is capable of aggregating data received from multiple control units, *see* Section X.E.13.b, it would have been natural and obvious to include a user interface at the collection node that displays any detected alarm conditions raised by a control unit. EX1003, ¶ 302.

d. Limitation 13(d)

The collection node (i.e., the base unit) can analyze the information collected from one or more control units (i.e., CMUs) for the purpose of detecting high level fault conditions. EX1003, ¶ 303. The collection node can then raise alarms corresponding to any detected faults, as discussed above. *See* Section X.D.2.

For example, Armitage teaches that with data collected from multiple control units, "[f]ault conditions could be isolated to a particular railway car, or to a specific location, which may detect track failure or be used to assess root cause of the failure." EX1006, ¶ [0038]. More generally, analysis of the collected sensor data may occur at the control node (i.e, the CMU), at the collection node (i.e., the base unit), or a combination thereof. EX1003, ¶ 304.

For example, in reference to Figure 4, Armitage refers to a "Data Correlation Unit" ("DCU") that analyzes collected data. EX1006, ¶ [0043]; EX1003, ¶ 305. The DCU may include the control node (i.e., the CMU) ***or*** the collection node (i.e., the base unit). EX1006, ¶ [0043]; EX1003, ¶ 305. The DCU can generate an alert

(i.e., an alarm) if it detects a significant deviation from normal conditions. *Id.* Armitage therefore discloses, or at least renders obvious, a system wherein the collection node analyzes collected data and raises an alarm if failure conditions are detected. EX1003, ¶ 305. A PHOSITA would have understood that it was particularly important to raise "high level" alarms, such as alarms for issues affecting multiple railcars or corresponding to a "red condition" on Armitage's health scorecard. *Id.*; EX1006, ¶ [0044].

Armitage therefore discloses or renders obvious every element of claim 13. EX1003, ¶ 306.

14. Dependent Claim 14

See Section X.E.13.a; EX1003, ¶ 307.

15. Dependent Claim 15

Armitage discloses that the collection node "may be distributed among multiple processing devices." EX1006, ¶¶ [0019], [0037]. The collection node is therefore capable of "distributed event processing." EX1003, ¶ 308.

Armitage also discloses that its system may perform "trend modeling" to "identif[y] specific sensor telemetry that lies outside norms." EX1006, ¶ [0044]. In Armitage's system, this analysis is performed by the DCU, which can be a part of the collection node (i.e., the base unit) as discussed above with respect to Limitation 13(d). *See* Section X.E.13.d; EX1003, ¶ 309.

More generally, the use of trend analysis was widely known in the art prior to the effective filing date of the '223 Patent. *See* Section X.B.3; EX1003, ¶ 310. A PHOSITA would have been motivated to use trend analysis (e.g., as described in paragraphs [0030] and [0044] of Armitage) due to the "vastly improved failure prediction capability" that trend analysis provides. *See* EX1007, ¶ [0042]; EX1003, ¶ 310.

Armitage therefore discloses or renders obvious every element of claim 15. EX1003, ¶ 311.

16. Dependent Claim 16

The collection node (i.e., the base unit) can apply heuristics to data collected from multiple CMUs to determine if a high level alarm should be raised. EX1003, ¶ 312.

As explained in detail above, a PHOSITA would have been aware of obvious, predictable benefits to performing heuristics on data collected by multiple control nodes and aggregated at a collection node. EX1003, ¶ 313; *see* Sections X.B.1.d and X.B.2. Armitage discloses examples of heuristics that are conducted at the collection node and provide these expected benefits. EX1003, ¶ 313.

For example, the "trend modeling" analysis that can be performed at the collection node, discussed above with respect to claim 15, is a type of "heuristic" that also meets the limitations of claim 16. *See* Section X.E.15; EX1003, ¶ 314. As

discussed above with respect to Limitation 13(a), Armitage teaches that data collected from multiple control units can be used to isolate fault conditions to a particular railway car, to detect track failures, or to assess the root cause of a failure detected at the sensor level. EX1006, ¶ [0038]; EX1003, ¶ 314; *see generally* Section X.E.13.a. Armitage also discloses the use of a "moving average and trend analysis" to detect "statistically significant deviations" that are indicative of failure. *See* Section X.D.2. All of these are examples of heuristics that can be performed at Armitage's collection node. EX1003, ¶ 314.

Armitage therefore discloses or renders obvious every element of claim 16. EX1003, ¶ 315.

17. Dependent Claim 17

See Section X.E.13.a; EX1003, ¶ 316.

18. Dependent Claim 18

Armitage discloses that the sensor may be a temperature sensor. *See* Section X.D.1.c; EX1003, ¶ 317.

19. Dependent Claim 20

As discussed above, Armitage discloses the use of "trend modeling" to "identif[y] specific sensor telemetry that lies outside norms, where 'normal' can be defined dynamically by assessing the set of sensors on each railway car." EX1006, ¶ [0044]; EX1003, ¶ 319. *See* Section X.E.15; Section X.E.13.d.

Stated plainly: Armitage discloses a type of analysis called trend modeling, which (a) uses a model to predict ***expected*** sensor readings, based on the current operating conditions, and (b) identifies ***actual*** sensor readings that lie outside the predicted range. EX1003, ¶ 320. A PHOSITA would understand that trend modeling involves a *comparison* between (a) the statistical model and (b) the actual data, and that Armitage's system raises an alarm if the actual data falls outside the expected range. *Id.*; *see also* Section X.E.13.b. This analysis can be performed by the control node (i.e., the CMU), by the collection node (i.e., the base unit), or both. *Id*.

Armitage therefore discloses or renders obvious every element of claim 20. EX1003, ¶ 321.

20. Dependent Claim 21

Armitage discloses numerous analytical techniques that involve a comparison between (a) currently collected data, and (b) data collected over a pre-determined period of time. EX1003, ¶ 322.

For example, the "trend modeling" performed in Armitage's system involves a comparison between (a) currently collected data, and (b) data collected over a pre-determined period of time. EX1003, ¶ 323; *see also* Section X.E.19.

As an additional example, Armitage teaches that its system "could process the sensor information to determine anomalies from an average, such as an

anomaly from a running average of the temperature of all wheels on railway car." EX1006, ¶ [0029]. Stated differently: temperature anomalies can be detected by comparing current temperature data (i.e., the current sensor reading) with temperature data collected over a pre-determined period of time (i.e., the running average). EX1003, ¶ 324. *See also* EX1006, ¶ [0043] (describing a similar procedure).

Armitage therefore discloses every element of claim 21. EX1003, ¶ 325.

21. Dependent Claim 22

A system meets the limitations of claim 22 if an alarm is raised based on *any one* of criteria (a) through (e). EX1003, ¶ 326. Criteria (a) through (e) recited in claim 22 are well-known, conventional heuristic techniques that would have been obvious to a PHOSITA. *Id.*; *see* Section X.B.6.

Armitage discloses a variety of heuristic techniques that fall within the scope of claim 22. EX1003, ¶ 327. For example, Armitage teaches that:

> In some examples, a standard deviation metric is employed to determine when data from one or more sensor nodes becomes an outlier from a main cluster of sensor node data, such as when data from a sensor node deviates by more than three standard deviations, among other examples.

EX1006, ¶ [0041]; *id.*, ¶¶ [0042]–[0043]. This corresponds to criteria (c). EX1003, ¶ 327.

Armitage therefore discloses or renders obvious every element of claim 22. EX1003, ¶ 328.

22. Dependent Claim 32

See Section X.D.5; EX1003, ¶ 338.

F. Ground 6: Claims 1 and 24 are unpatentable under 35 U.S.C. § 103(a) over Armitage in view of LeFebvre, Denny, and Provasnik.

Armitage and LeFebvre do not expressly disclose the "external temperature sensor" limitations of claims 1 and 24. As discussed in Section X.B, *supra*, these limitations would have been obvious to a PHOSITA based on the general knowledge in the art, which is illustrated by Denny and Provasnik. EX1003, ¶ 367.

Armitage, LeFebvre, Denny, and Provasnik are analogous art. *See* Section X.B; Section X.E, *supra*. All four references are directed to devices for monitoring the temperature of metallic mechanical components—specifically, wheel bearings (Armitage and Denny) and engines (Provasnik). EX1003, ¶ 368. A PHOSITA would have been motivated to modify Armitage's sensor device to include an external temperature sensor with a magnetic attachment for the reasons discussed in further detail below.

1. Independent Claim 1

a. Claim 1 Preamble

See Section X.D.1.a; EX1003, ¶ 369.

b. Limitation 1(a)

See Section X.D.1.d; EX1003, ¶ 370.

c. Limitation 1(b)

See Section X.D.1.c; EX1003, ¶ 371.

d. Limitation 1(c)

See Section X.D.1.f; EX1003, ¶ 372.

e. Limitation 1(d)

See Section X.D.1.g; EX1003, ¶ 373.

f. Limitation 1(e)

Armitage does not expressly disclose a temperature sensor that is external to the housing and includes a magnetic attachment.

As discussed above in Section X.C.1.f, Denny provides evidence that external temperature sensors were standard, commonly used components with well-understood advantages (e.g., monitoring high-temperature components). EX1003, ¶ 374.

Similarly, Provasnik provides evidence that magnetic attachments were standard, commonly used components with well-understood advantages (e.g., releasably attaching a sensor to a metallic substrate). *See* Section X.C.1.f; EX1003,

¶ 375. *See also* EX1006, ¶ [0015] (disclosing that each sensor node may be "coupled to the associated undercarriage element with a magnet").

Accordingly, it would have been obvious for a PHOSITA to equip Armitage's sensor unit with an external temperature sensor, and to use a magnet to attach the external temperature sensor to a metallic portion of a railcar (e.g., a wheel bearing) where temperature monitoring was desired. EX1003, ¶ 376.

g. Limitation 1(f)

See Section X.D.1.h; EX1003, ¶ 377.

h. Limitation 1(g)

See Section X.E.3.b; Section X.A.7.b; EX1003, ¶ 378.

Armitage, in view of LeFebvre, Denny, and Provasnik, therefore renders obvious every element of independent claim 1. EX1003, ¶ 379.

2. Dependent Claim 24

See Section X.F.1.f; EX1003, ¶ 380.

XI. CONCLUSION

Petitioner has demonstrated in this Petition that claims 1–10, 13–18, and 20–32 of the '223 Patent are unpatentable. Petitioner, therefore, respectfully requests institution of an *inter partes* review of the '223 Patent and that claims 1–10, 13–18, and 20–32 be canceled.

Respectfully submitted,

Dated: January 30, 2023

By: /Eric J. Rakestraw/

Eric J. Rakestraw, Reg. No. 68,740
Daisy Manning, Reg. No. 66,369
HUSCH BLACKWELL LLP
190 Carondelet Plaza, Suite 600
St. Louis, MO 63105
(314) 480-1500 Telephone
(314) 480-1505 Facsimile
PTAB-ERakestraw@huschblackwell.com
PTAB-DManning@huschblackwell.com

Andrea L. Shoffstall, Reg. No. 75,426
HUSCH BLACKWELL LLP
1801 Wewatta Street, Suite 1000
Denver, CO 80202
303.749.7200 Telephone
303.749.7272 Facsimile
PTAB-AShoffstall@huschblackwell.com

Attorneys for Petitioner

CERTIFICATION

The Petition excluding the caption, Table of Contents, Table of Exhibits, Mandatory Notices under 37 C.F.R. § 42.8, and this Certification contains 13,946 words.

Respectfully submitted,

Dated: January 30, 2023

By: /Eric J. Rakestraw/
Eric J. Rakestraw, Reg. No. 68,740
Lead Counsel for Petitioner

CERTIFICATE OF SERVICE

Pursuant to 37 C.F.R. § 42.105, Petitioner certifies that this Petition for Inter Partes Review and supporting evidence was served by Federal Express®, on January 30, 2023, to the Patent Owner of U.S. Patent No. 9,365,223 at their correspondence address of record according to USPTO records:

Gary A. Hecht
Fox Rothschild LLP
997 Lenox Drive
Lawrenceville, NJ 08684

With courtesy copy to:
Jeff E. Schwartz
Fox Rothschild LLP
2020 K Street NW
Suite 500
Washington, DC 20006

By: / Eric J. Rakestraw/
Eric J. Rakestraw, Reg. No. 68,740
Lead Counsel for Petitioner