US008244411B2

(12) **United States Patent**
Baker

(10) **Patent No.: US 8,244,411 B2**
(45) **Date of Patent: Aug. 14, 2012**

(54) **ORIENTATION-BASED WIRELESS SENSING APPARATUS**

(76) Inventor: **David A. Baker**, Littleton, CO (US)

(*) Notice: Subject to any disclaimer, the term of this patent is extended or adjusted under 35 U.S.C. 154(b) by 1024 days.

(21) Appl. No.: **12/154,641**

(22) Filed: **May 27, 2008**

(65) **Prior Publication Data**

US 2009/0299550 A1 Dec. 3, 2009

(51) **Int. Cl.**
G05D 1/00 (2006.01)

(52) **U.S. Cl.** **701/2**

(58) **Field of Classification Search** . 701/2; 342/357.21, 342/357.22, 357.25; 343/872, 878
See application file for complete search history.

(56) **References Cited**

U.S. PATENT DOCUMENTS

6,339,397	B1 *	1/2002	Baker	342/357.64
7,450,083	B1 *	11/2008	Baker	343/873
8,006,574	B2 *	8/2011	Meyer	73/862.627
2009/0120208	A1 *	5/2009	Meyer	73/862.045

* cited by examiner

Primary Examiner — Faye M. Fleming
(74) *Attorney, Agent, or Firm* — Holland & Hart LLP

(57) **ABSTRACT**

An orientation-based wireless sensor includes a transmitter unit having a body housing a microprocessor, a transmitter, and an accelerometer for detecting the orientation of the transmitter unit relative to one-, two- or three-axis of the direction of the pull of earth's gravity. The transmitter body is mounted on a feature of a vehicle that it is desirable to monitor. The transmitter will transmit orientation data at predetermined time intervals to a receiver on the vehicle, which will in turn process the information, adding additional information, such as GPS location, and wirelessly send the data to a database that is available to a customer over the Internet.

15 Claims, 8 Drawing Sheets

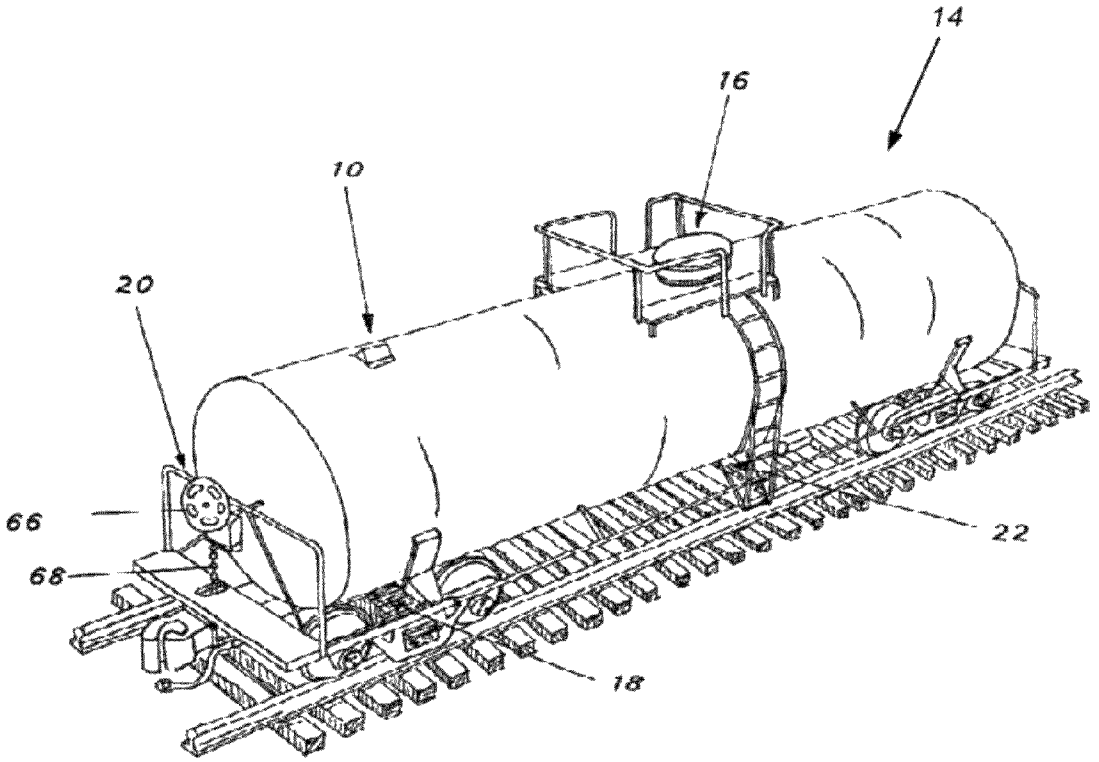

Amsted Ex. 2004
IPR2023-00538

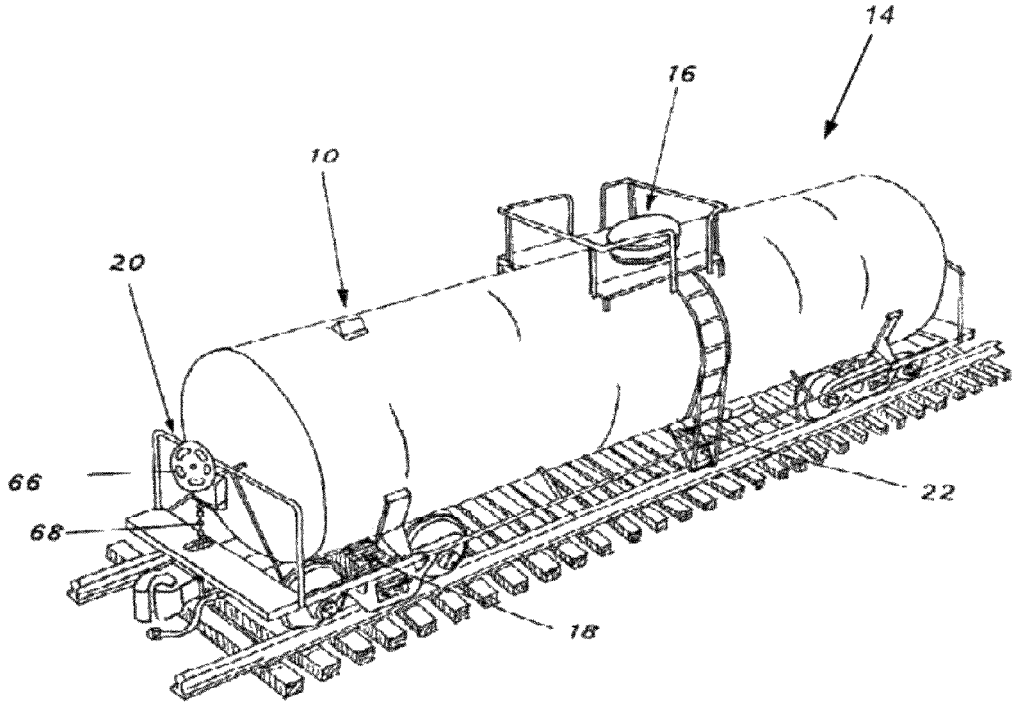

FIG. 1

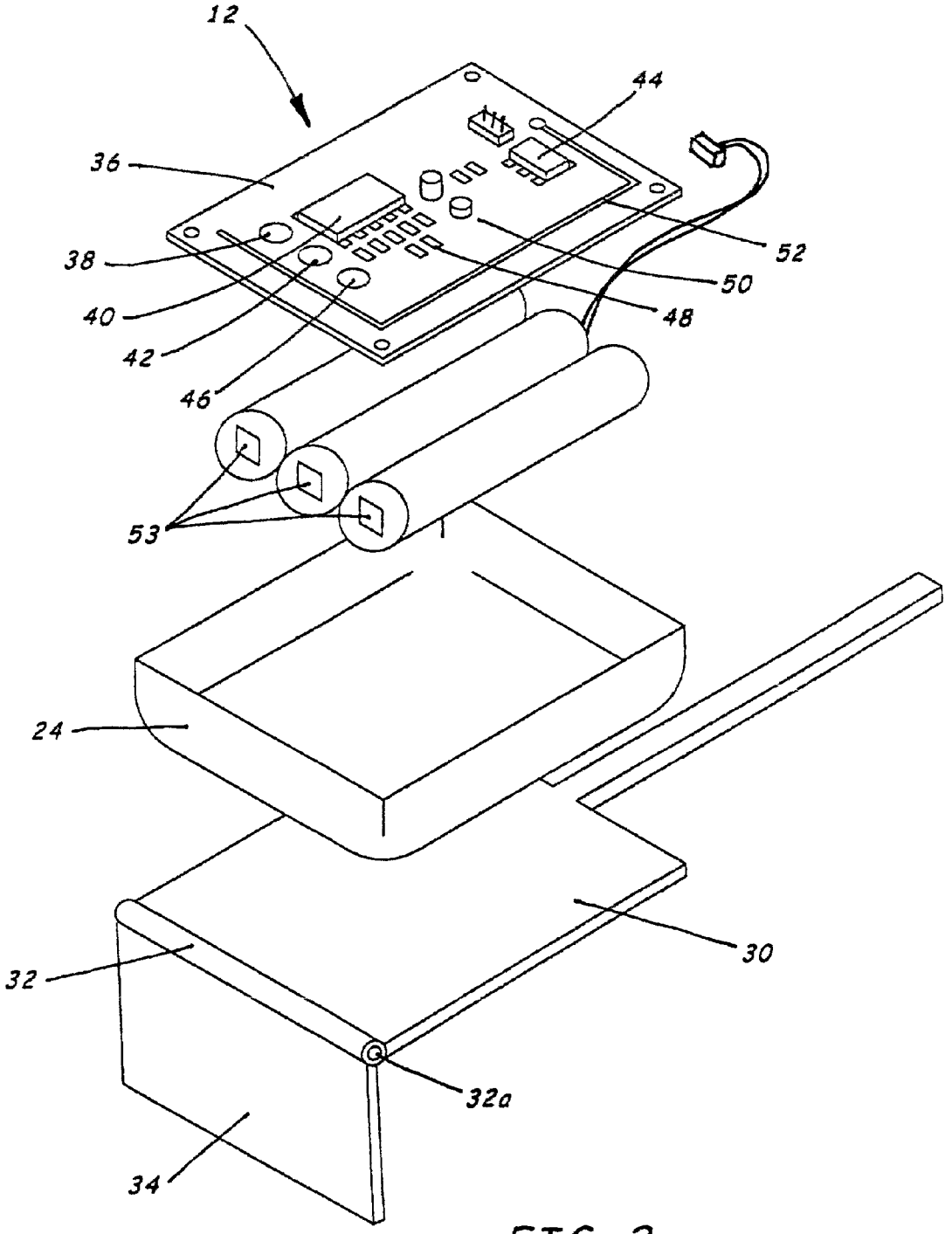

FIG. 2

Amsted Ex. 2004
IPR2023-00538

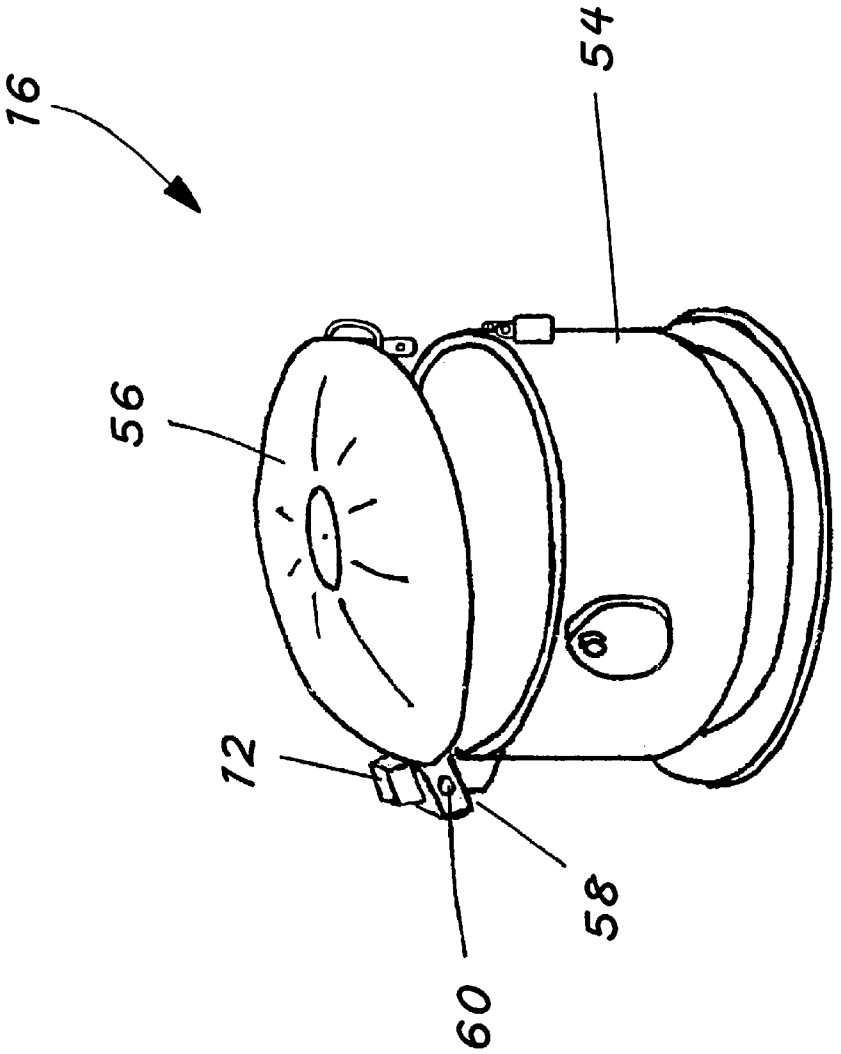

FIG. 3

Amsted Ex. 2004
IPR2023-00538

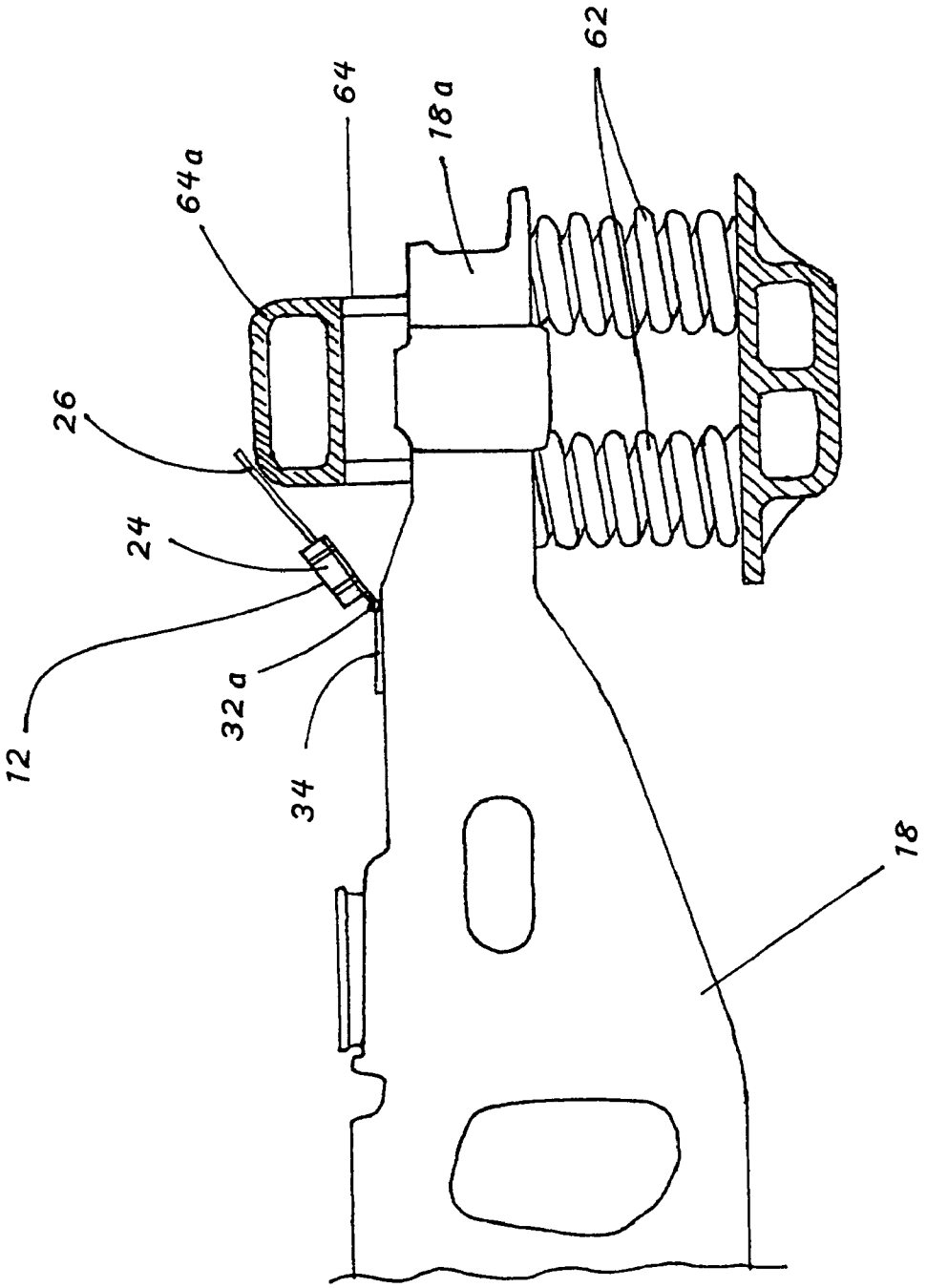

FIG 4.

Amsted Ex. 2004
IPR2023-00538

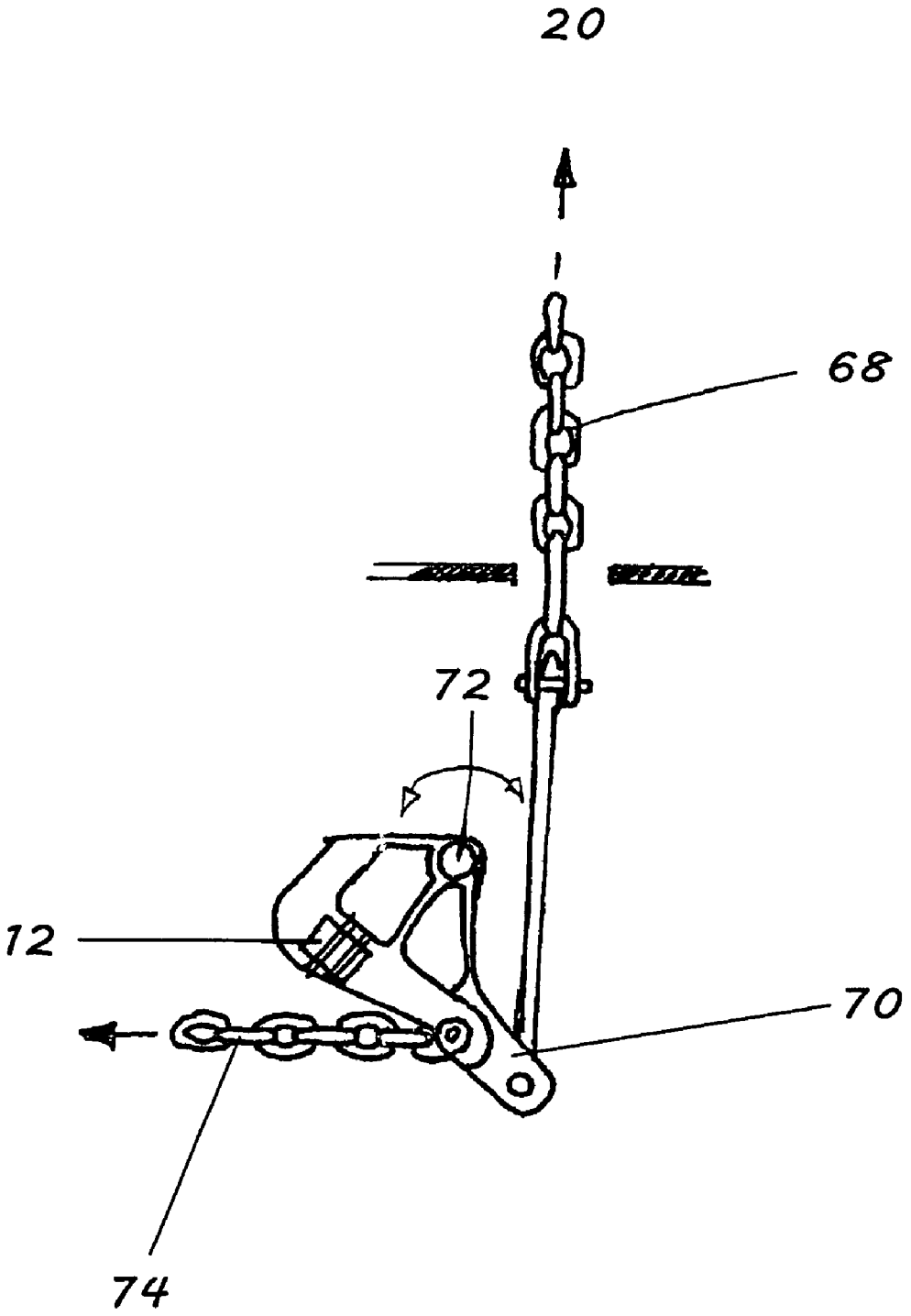

FIG. 5

Amsted Ex. 2004
IPR2023-00538

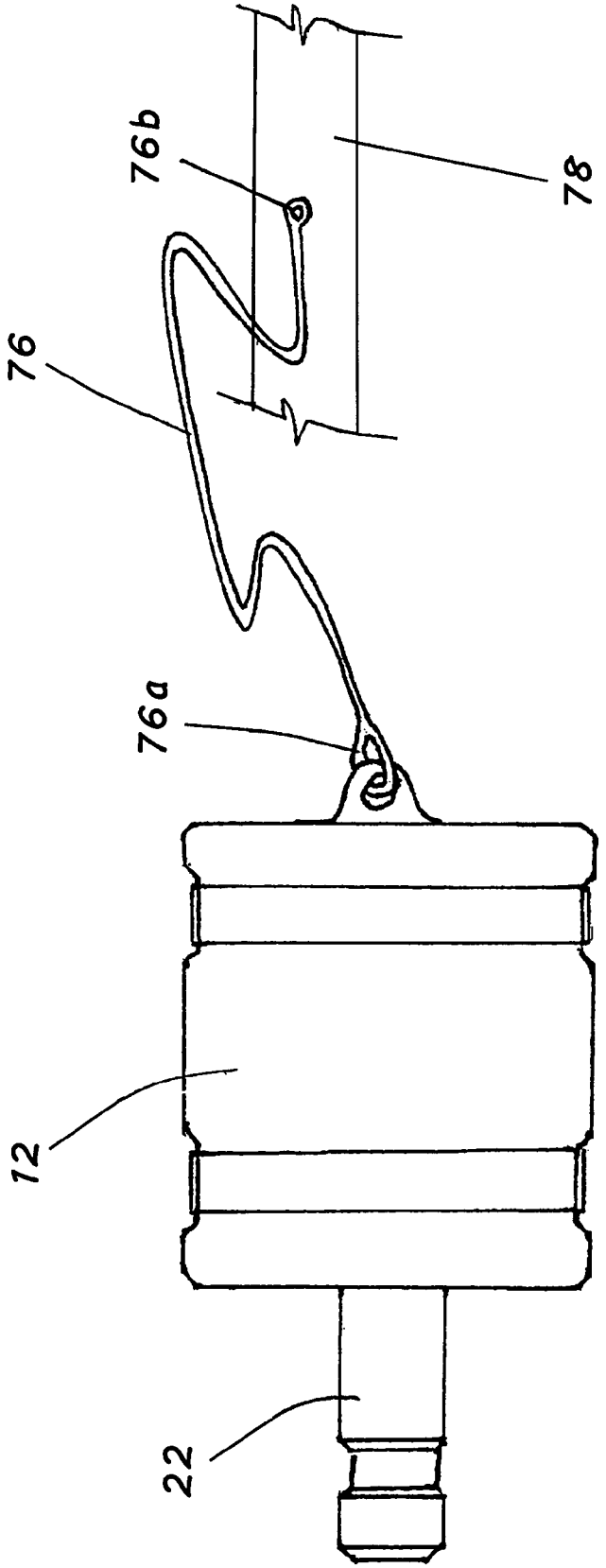

FIG. 6

Amsted Ex. 2004
IPR2023-00538

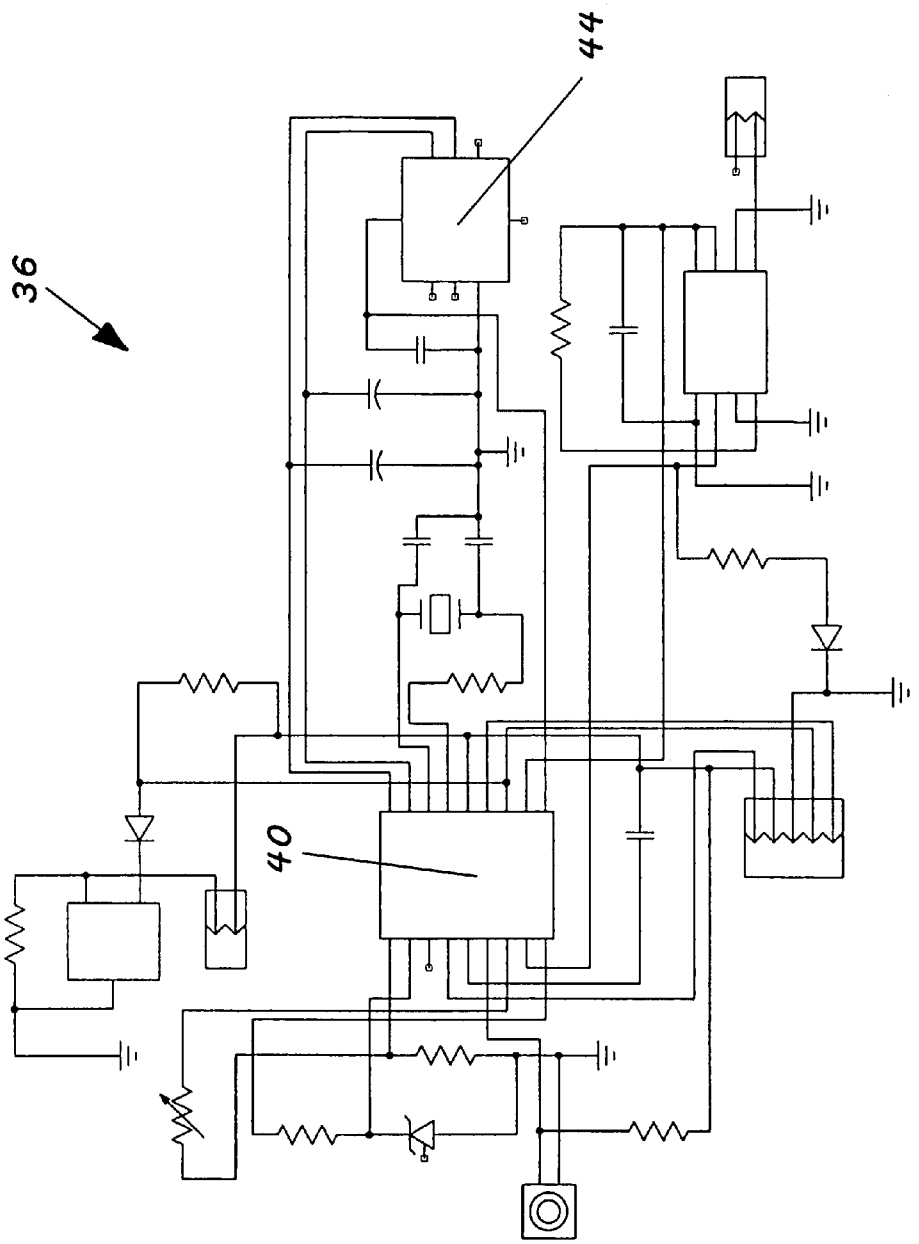

FIG. 7

Amsted Ex. 2004
IPR2023-00538

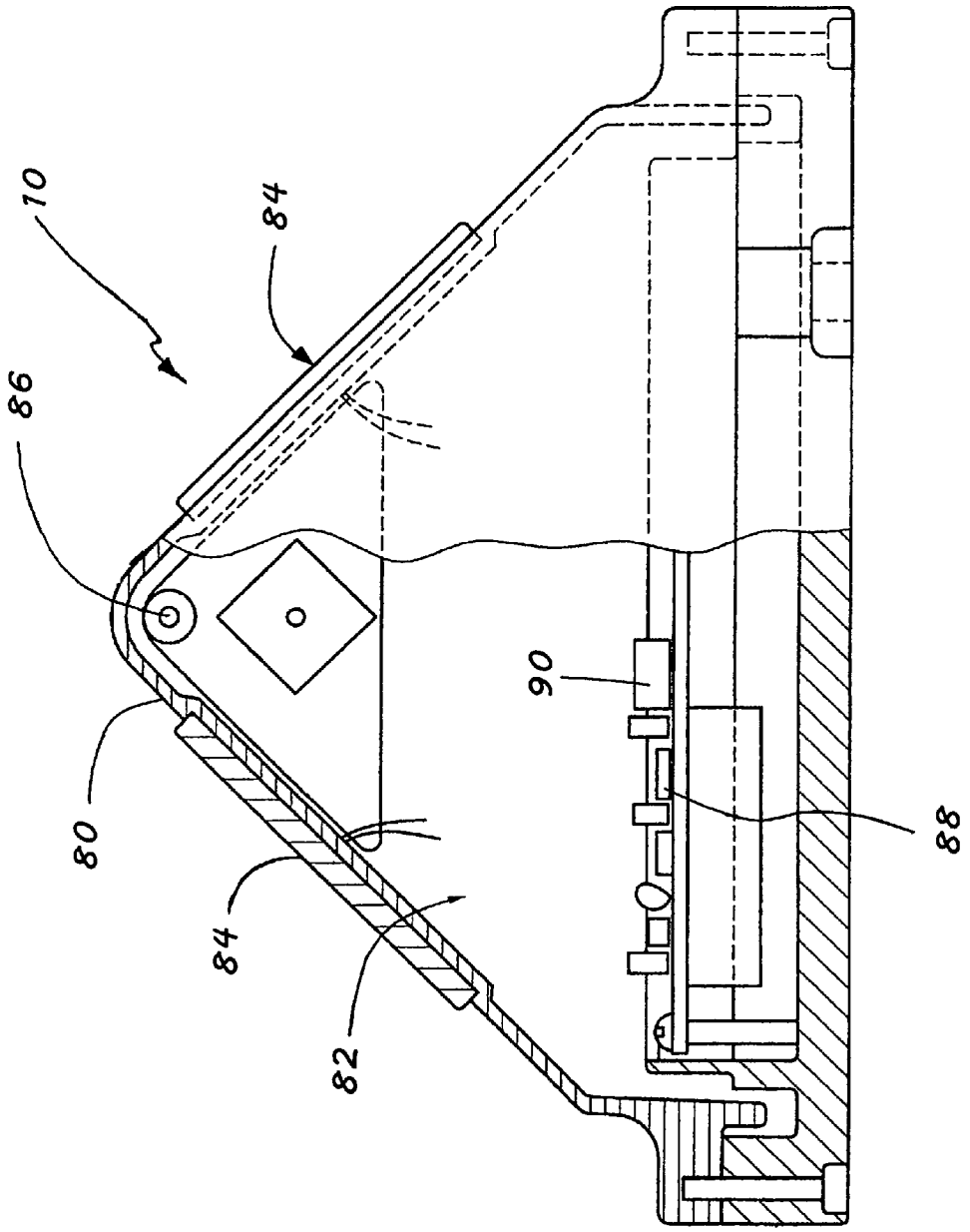

FIG. 8

Amsted Ex. 2004
IPR2023-00538

ORIENTATION-BASED WIRELESS SENSING APPARATUS

CROSS-REFERENCES TO RELATED APPLICATIONS

(Not applicable)

STATEMENT AS TO RIGHTS TO INVENTIONS MADE UNDER FEDERALLY SPONSORED RESEARCH AND DEVELOPMENT

(Not Applicable)

INCORPORATION-BY-REFERENCE OF MATERIAL SUBMITTED ON A COMPACT DISC

(Not applicable)

BACKGROUND OF THE INVENTION

(1) Field of the Invention

The present invention relates generally to portable, self-contained vehicle tracking and monitoring systems, and more particularly to an improved orientation-based wireless sensing apparatus for sensing several conditions of a railcar or other vehicle using accelerometers.

(2) Description of Related Art Including Information Disclosed Under 37 CFR 1.97, 1.98

There are many problems and challenges for inventors to create a viable wireless sensing device for detecting a variety of different conditions of a vehicle or load using a single configuration of the device. Attempts have been made but no one has created a device to solve all of the problems.

First, the device must have low power requirements because railcars have no electrical power and the devices are subject to long-term use before being conveniently accessible to replace the power source.

The tracking unit must also be rugged and physically last a long time. Rail cars are constantly exposed to the elements, including salt spray, and are subjected to various shocks and vibrations during loading, sorting, and movement about the country.

Because there are many different types of conditions on a railcar that it is desirable to monitor, including: (1) whether the car is loaded or empty, (2) whether a hatch is open or closed, (3) whether a handbrake is set or released, (4) whether a door is open or closed, etc., it is important that the detectors have the ability to sense a variety of different motions or positions of critical vehicle features.

BRIEF SUMMARY OF THE INVENTION

It is therefore a general object of the present invention to provide an improved orientation-based sensing apparatus for railcars and the like.

A further object is to provide a sensing apparatus with discrete transmitters that are easily mounted to locations of interest on a railcar.

Yet another object of the present invention is to provide a sensing apparatus with low power consumption for sensing the position of designated components of a railcar.

These and other objects will be apparent to those skilled in the art.

The orientation-based sensing apparatus of the present invention includes a transmitter unit having a body housing a microprocessor, a transmitter, and one or more accelerometers sufficient to measure changes in the direction of the transmitter housing relative to gravity. The transmitter housing is mounted on an operable component of a feature of a vehicle for which it is desirable to monitor. The vehicle is preferably a railroad freight car, but may be any other similar type of vehicle. The transmitter will transmit orientation data at predetermined time intervals to a receiver on the vehicle, which will in turn process the information, add additional information such as GPS location, and wirelessly send the data to a database that is available to a customer over the Internet. A plurality of transmitters on the vehicle will monitor several features of the vehicle and periodically send transmissions to the receiver with the status of the monitored feature. The receiver includes a microprocessor with a database identifying the transmitters to be monitored, and may be powered down during the intervals between transmissions from the transmitters.

BRIEF DESCRIPTION OF THE SEVERAL VIEWS OF THE DRAWING

The preferred embodiment of the invention is illustrated in the accompanying drawings, in which similar or corresponding parts are identified with the same reference numeral throughout the several views, and in which:

FIG. **1** is a perspective view of a railcar showing various features that it is desirable to sense or monitor, and a receiver unit of the sensing apparatus.

FIG. **2** is an exploded perspective view of one transmitter unit of the sensing apparatus;

FIG. **3** is a perspective view of a railcar hatch with a transmitter mounted in a location to detect the position of the hatch;

FIG. **4** is an elevational view of a railcar bolster with a transmitter mounted in a location to detect whether the railcar is loaded or empty;

FIG. **5** is an elevational view of a railcar bell crank of a brake system with a transmitter mounted in a location to detect whether the brake is on or off;

FIG. **6** is an elevational view of a transmitter connected to a security pin, to detect whether the pin has been removed from the secured position on the railcar;

FIG. **7** is a circuit diagram of one embodiment of the transmitter; and

FIG. **8** is a cross-sectional view through a receiver of the invention.

DETAILED DESCRIPTION OF THE INVENTION

Referring now to the drawings, and more particularly to FIG. **1**, the sensing apparatus of the present invention includes a single receiver/sender unit **10**, and a plurality of standardized transmitter units **12** (one of which is shown in detail in FIG. **2**) mounted on a railcar **14**. Each transmitter unit **12** (not seen in FIG. **1**), is positioned at a predetermined feature of railcar **14** to detect orientation of a component of that feature by sensing the direction of gravity using accelerometers. This orientation may thereby signify the fact that a change in conditions has occurred for that feature. In the preferred embodiment of the invention, the features to which a transmitter is operably attached include: hatch **16**, bolster **18**, hand brake **20** and security pin **22**. Each of these features will be described in more detail hereinbelow.

Referring now to FIG. **2**, one transmitter unit **12** of the present invention is shown in exploded form, to reveal more details. Transmitter **12** includes a hollow body **24**, which serves as a mold for a potting compound such as polyurethane

Amsted Ex. 2004
IPR2023-00538

epoxy or other appropriate material to provide waterproofing and physical toughness. It should be noted that a hollow body such as that shown in the drawings is not necessary, and that the contents of the body may be encapsulated in a sealed enclosure or formed with a reusable mold.

A mounting plate **30** is fastened to the bottom of body **24** and includes a hinge **32** along one edge thereof. A hinge plate **34** is pivotally connected to hinge **32** for free pivotal movement about the axis of hinge pin **32***a* relative to mounting plate **30**. While a hinge with a hinge pin is shown in detail in the drawings, any device with a pivotal connection (such as a living hinge or the like) could be substituted for the mechanical hinge described. A wand **26** extends outwardly coplanar with plate **30** and orthogonal to hinge **32** so that movement of extended wand **26** will pivot the entire body **24** with mounting plate **30** about pivot pin **32***a* of hinge **32**.

A circuit board **36** is installed within body **24**, and includes several features. First, circuit board **36** includes a short-range RF transmitter **38**, preferably with a range of 100-1,000 feet. Circuit board **36** also includes a microprocessor **40** interconnected among the various electrical components of circuit board **36**, to activate, monitor, control and communicate with each of the components. A variety of sensors may be incorporated in circuit board **36**, including, but not limited to: (a) one, two or three mutually orthogonal accelerometers **44** to evaluate orientation of gravity relative to the body **24**; (b) temperature sensor **46** (such as a thermister); (c) magnetic field detector **48** (such as a reed switch or Hall sensor); (d) battery voltage detector **50**; etc. Finally, circuit board **36** includes an antenna trace or attached antenna element **52**.

A primary power source, such as batteries **52**, provides power to circuit board **36**. Preferably, batteries **52** are of non-rechargeable varieties, such as those using lithium or alkaline chemistry. As noted above, each transmitter **12** is deployed on a particular feature to be monitored on railcar. For this purpose, the accelerometers **44** may be of any known type, but are preferably low-range accelerometers having a range of at least +/−1 G. The accelerometer of choice utilizes MEMS technology, as it can measure a steady-state acceleration and not just changes in acceleration. It should be noted that this may be accomplished using one, two or three accelerometers, depending upon the orientation of the transmitter and the rotational movement that is being monitored. Thus a 3-axis accelerometer is the most flexible in that it will detect the orientation of the transmitter, no matter the orientation of the transmitter. A 2-axis accelerometer is ideal in that it is less expensive and consumes less power than a 3-axis accelerometer. A two axis accelerometer will detect changes in the gravity component measurements regardless of its orientation if the axis of rotation is other than vertical. Therefore, the third axis of the 3-axis accelerometer is not mandatory. For this reason, only two orthogonal axis of the direction of gravity need be detected. Finally, if the transmitter is oriented to merely detect a tilt angle, then a single axis accelerometer is all that is needed. As noted above, in the preferred embodiment, a single, two-axis MEMS accelerometer is used. However, other combinations may also be used to determine all three axis. For example, a combination of two single-axis accelerometers, with each axis mutually orthogonal, may be used in place of a single 2-axis accelerometer. Thus, accelerometers **44** may be installed so as to detect pertinent orientation of an associated physical component, as will be described in more detail with respect to each railcar feature.

Each transmitter **12** is a small self-contained battery-powered device that is deployed on a feature of a railcar and which "awakens" at periodic intervals to read the condition of the particular component to which it is attached, and transmits that sensor data to receiver **10**, along with "housekeeping" data. Each transmitter **12** transmits a unique ID number with each transmission so that the receiver **10** can reference an internal database to determine if the transmitter **12** belongs to that particular receiver **10**. This prevents multiple receivers **10** from gathering the same data from a given transmitter **12**, in the event that multiple railcars are within transmitting range of one another.

Referring now to FIG. **3**, a typical hatch **16** on a railcar **14** is shown in more detail. Hatch **16** includes a generally cylindrical access passage **54** with a lid **56** pivotally mounted to passage **54** on hinge **58**. Hinge **58** has a generally horizontally oriented hinge pin **60**, such that lid **56** will pivot in a vertical plane orthogonal to the axis of hinge pin **60**. A transmitter **12** is mounted to the pivoting lid **56** adjacent hinge **58**, such that movement of lid **56** will also move transmitter **12** about the rotational axis of hinge pin **60**, and in an angular direction relative to the direction of gravity. Thus the accelerometer **44** within transmitter **12** will detect the orientation of the transmitter **12** and lid **56**, thereby monitoring the position of lid **56** as it is moved between open and closed positions. This information is then transmitted to receiver **10** (FIG. **1**).

Referring now to FIG. **4**, a portion of bolster **18** is shown in more detail. One end **18***a* of bolster **18** is supported on compression springs **62**, which are mounted within side frame **64** of a wheelset. As a load is added to the railcar, bolster **18** will depress springs **62** and move downward relative to the upper member **64***a* of side frame **64**. Transmitter **12** is connected between bolster **18** and upper member **64***a* of side frame **64** to detect the position of the bolster **18** relative to sideframe upper member **64***a*. In this case, the hinge plate **34** is mounted to bolster **18**, so that transmitter body **24** will pivot about hinge pin **32***a*. The end of tube **26** extends outwardly from body **24** and directly contacts the top of bolster sideframe upper member **64***a*. It can be seen that when the railcar **14** is loaded, bolster **18** will compress springs **62** and lower the bolster relative to sideframe upper member **64***a*. This downward relative position translates as a rotational movement of tube **26** and thereby moves transmitter **12** to a more vertical position relative to gravity. Accelerometer **44** will measure the tilt angle, and hence the amount of downward movement of the bolster **18**, which is directly proportional to the load that is added (or removed) from the railcar.

Referring once again to FIG. **1**, hand brake **20** is a conventional type of brake with a rotatable brake wheel **66** connected to a chain **68**, which wraps, or unwraps from the axle of the wheel **66** to apply or release the brake. FIG. **5** is a detailed drawing of the connection of the chain **68** extending from wheel **66** (in FIG. **1**), to the bell crank **70**. Bell crank **70** pivots about pin **72**, to draw brake chain **74** in a horizontal direction, thereby applying (or releasing) the brake. A transmitter **12** is directly mounted to bell crank **70**, as shown in FIG. **5**, to detect the rotating bell crank's orientation relative to the direction of earth's gravity. In this way, transmitter **12** can detect whether hand brake **20** is applied or released, and transmit this information to receiver **10** (FIG. **1**).

Referring now to FIG. **6**, a transmitter **12** is shown mounted to one end of a security pin **22**. Pin **22** is of a type that is positioned horizontally in order to secure a desired member in position. A lanyard **76** is secured at one end **76***a* to a horizontal end of transmitter **12**, and secured at the other end **76***b* to an adjacent frame **78** of the railcar **14** (shown in FIG. **1**). It can be seen that, when pin **22** is removed from its secured position, it will drop and swing from lanyard **76**. Because lanyard **76** is secured to a horizontal end of transmitter **12**, it will re-orient the transmitter with the horizontal end in a vertical

Amsted Ex. 2004
IPR2023-00538

position. This orientation is detected by the accelerometer **44** within transmitter **12**, and transmitted to receiver **10**.

FIG. **7** is provided to present one embodiment of a circuit diagram for the circuit board **36** of transmitter **12**.

Referring once again to FIG. **1**, receiver **10** is positioned on railcar **14** in any convenient location. Receiver **10** is a device capable of receiving data from a plurality of transmitters **12**, adding additional data such as GPS location, time, other sensor data and housekeeping data, and sending that data through a secondary wide-area network such as GSM/GPRS, satellite, Wi-Fi or other means that will move the data on to the Internet for reception at a server computer.

FIG. **8** is a cross-sectional view through a base receiver **10** of the present invention. Receiver **10** includes a hollow housing **80** which may be triangular in cross-sectional shape, with an interior cavity **82** large enough to enclose the various electronic components of the receiver. A pair of solar panels **84** are mounted to the surfaces of housing **80**, to provide electrical power to the receiver **10**. In the preferred embodiment of the invention, housing **80** is formed of a material that is RF transparent, to permit electronic transmissions to pass through the housing. An antenna **86** is mounted within the interior cavity **82**, and preferably in the upper apex of the housing **80**.

A microprocessor **88** receives various data and signals from receiver circuitry **90**, and is powered by batteries which are charged from the solar panels **84**. Receiver circuitry **90** includes a GPS receiver for receiving tracking information from various satellites of the GPS. This data is transmitted in digital form from the GPS receiver to the microprocessor **88**. Data from the GPS is processed by the microprocessor **88** and formatted as a data packet. As noted above, the receiver **10** will also receive data from the various transmitters **12** and identify each transmitter **12** from a database in the microprocessor **88**. Upon receipt of data from transmitters **12**, receiver **10** will check the data packet for errors and add other data available to the receiver (such as GPS location and accurate time stamp). Receiver **10** will then use a wireless Internet connection to transmit the data to a web-site/database facility for customer access via the Internet.

Referring again to FIG. **2**, each transmitter **12** is designed to transmit a time between transmissions, so that the receiver **10** can enter this information in the database and know the time interval to the next transmission. In general, the time interval between transmissions is fixed, but this is not required. This time interval between transmissions allows the receiver **10** to save power by only powering its RF receiver during expected transmission windows of the various transmitters **12**.

Each transmitter **12** will remain in a low-power state, running a Real Time Clock (RTC) only until a "wake-up": time interval is reached. At that time, it will bring the processor out of sleep mode. Once out of sleep mode, the transmitter **12** will gather all sensor data, build a data packet, and transmit the data packet to the base receiver **10**. Transmitters **10** may gather sensor data at times other than transmission times, and may send maximum and minimum values and/or a string of multiple readings gathered between transmission times.

As shown in the circuit diagram of FIG. **7**, significant battery life can be achieved by implementing a power design wherein the microprocessor actively maintains a minimum operating voltage, and therefore a minimum operating current. This is achieved by having the microprocessor switch in and out a MOSFET switch that bypasses a power lead supplied via a voltage-dropping resistor. When the MOSFET switch is open, power is fed via a resistor along the power lead, to present a lower voltage to the microprocessor. As the battery discharges and outputs a lower voltage, the MOSFET switch is closed to bypass the resistor feed-path and provide a direct connection between battery and microprocessor.

Whereas the invention has been shown and described in connection with the preferred embodiments thereof, many modifications, substitutions and additions may be made which are within the intended broad scope of the appended claims.

What is claimed is:

1. An orientation-based wireless sensing apparatus, comprising:

a body formed of material invisible to RF transmissions and mounted on a component desired to be monitored for its orientation relative to earth's gravitational pull (the direction of gravity);

an accelerometer within the body for measuring relative to at least a first axis of the direction of gravity;

a microprocessor within the body and connected to the accelerometer;

a transmitter within the body and connected to the microprocessor;

a power source within the body and connected to the accelerometer, microprocessor and transmitter; and

an antenna mounted within the body and connected to the transmitter.

2. The sensing apparatus of claim **1**, wherein said accelerometer includes means for measuring along a second axis of the direction of gravity, orthogonal to the first axis.

3. The sensing apparatus of claim **2**, wherein said accelerometer includes means for measuring along a third axis of the direction of gravity, orthogonal to the first and second axis.

4. The sensing apparatus of claim **3**, wherein said accelerometer includes a first two-axis accelerometer and a second single-axis accelerometer, the measuring axes of the first and second accelerometers all being orthogonal, to measure three distinct axis of acceleration relating to the direction of gravity.

5. The sensing apparatus of claim **3**, further comprising:

a mounting plate attached to a lower wall of the body and having a first side edge; a hinge plate pivotally connected along the first side edge of the mounting plate by a hinge.

6. In combination:

a vehicle having at least one operable feature that it is desired to monitor, the operable feature including at least one component that moves between first and second positions; and

an orientation-based wireless sensing apparatus mounted on the vehicle and positioned to monitor the operable feature and transmit a physical orientation of the component relative to earth's direction of gravity, thereby indicating a position of the component, comprising:

a receiver unit mounted on the vehicle and operable to receive transmitted data packets from at least one transmitter unit on the vehicle and to wirelessly transmit data packets to a remote database for storage and further processing and transmission; and

a transmitter unit mounted on the component and including:

a body attached to the component and formed of material invisible to RF transmissions;

an accelerometer within the body for measuring relative to at least a first axis of the direction of gravity;

a microprocessor within the body and connected to the accelerometer;

a transmitter within the body and connected to the microprocessor;

Amsted Ex. 2004
IPR2023-00538

a power source within the body and connected to the accelerometer, microprocessor and transmitter; and

an antenna mounted within the housing body and connected to the transmitter;

said microprocessor operable to receive orientation data relative to the component from the accelerometer, process the information, and transmit the processed information as a data packet through the transmitter to the receiver unit.

7. The combination of claim **6**, wherein the operable feature includes a door operable between open and closed positions, and wherein said transmitter unit is mounted on said door.

8. The combination of claim **6**, wherein the operable feature is a hand brake, wherein said component is a bell crank operably interposed in the handbrake, and wherein said transmitter unit is mounted on said bell crank.

9. The combination of claim **6**, wherein said transmitter unit further includes:

a mounting plate attached to a lower wall of the body, the mounting plate having a first side edge;

a hinge plate pivotally connected along the first side edge of the mounting plate by a hinge.

10. The combination of claim **9**:

wherein the operable feature is a wheelset of the vehicle having compression springs supporting one end of a bolster;

wherein said wheelset has a sideframe which does not move relative to the compression of the springs and the bolster supported on those springs;

wherein the component is the bolster end supported on the springs, movable between a lower compressed position when the vehicle is loaded, and an upper uncompressed position when the vehicle is not loaded;

wherein said transmitter unit hinge plate is secured to the bolster end and a portion of the mounting plate is operably supported on the wheelset sideframe, said transmitter unit positioned such that movement of the bolster end between the upper and lower positions will cause a change of orientation of the transmitter body, which is measured by the accelerometer as a change in angle of orientation relative to the direction of gravity.

11. The combination of claim **6**, further comprising circuitry connected between the transmitter power supply and the microprocessor to maintain a minimum operating voltage and minimum operating current.

12. The combination of claim **11**, wherein said circuitry includes:

an electrical lead between the power supply and the microprocessor, said lead having a voltage dropping resistor interposed therein to present a lower voltage to the microprocessor therefore causing the microprocessor to consume less current;

a bypass lead electrically connecting the power supply and the microprocessor and bypassing the resistor;

a switch operable between open and closed positions and interposed in the bypass lead; and

said switch including means for detecting the voltage in the electrical lead and operable to closed the switch when the voltage drops to a predetermined value.

13. The combination of claim **6**, wherein the transmitter is programmed to transmit data packets at predetermined time intervals, and wherein the microprocessor in the receiver unit is programmed to power up the receiver at the predetermined intervals of transmission from the transmitter, and power down the receiver between those predetermined intervals.

14. In combination:

a vehicle having a plurality of operable features that it is desired to monitor, each operable feature including at least one component that moves between first and second positions; and

an orientation-based wireless sensing apparatus mounted on the vehicle and operable to monitor the operable features and transmit a physical orientation of each component relative to the first and second positions, comprising:

a single receiver unit mounted on the vehicle and operable to receive transmitted data packets from a plurality of transmitter units on the vehicle and to wirelessly transmit data packets to a remote database for storage and further processing and transmission; and

a plurality of transmitter units mounted on the vehicle, one transmitter unit mounted on each operable component of each monitored feature, each transmitter unit including:

a body attached to the component and formed of material invisible to RF transmissions;

an accelerometer within the body for measuring relative to at least a first axis of the direction of gravity, to thereby determine the orientation of the component;

a microprocessor within the body and connected to the accelerometer;

a transmitter within the body and connected to the microprocessor;

a power source within the body and connected to the accelerometer, microprocessor and transmitter; and

an antenna mounted within the body and connected to the transmitter;

said microprocessor operable to receive orientation data relative to the component from the accelerometer, process the information, and transmit the processed information as a data packet through the transmitter to the receiver unit;

each transmitter unit having a unique identification code associated therewith, and each transmitter microprocessor programmed to transmit the identification code as part of the data packet transmitted to the receiver unit; and

said receiver unit microprocessor including a database of the identification codes of each of the transmitter units on the vehicle, and operable to monitor and process only those data packets received from designated transmitters.

15. The combination of claim **14**, wherein each transmitter is programmed to transmit data packets at predetermined time intervals, and wherein the microprocessor in the receiver unit is programmed to power up the receiver at the predetermined intervals of each of the transmitters, and power down the receiver between those predetermined intervals.

* * * * *

Amsted Ex. 2004
IPR2023-00538