US009026281B2

(12) **United States Patent**
Murphy et al.

(10) **Patent No.: US 9,026,281 B2**
(45) **Date of Patent: May 5, 2015**

(54) **RAILCAR HANDBRAKE MONITOR**

(75) Inventors: **Wayne Murphy**, Pottstown, PA (US); **Andrew Martin**, West Chester, PA (US); **Jeevan Robinson**, Downingtown, PA (US)

(73) Assignee: **Amstead Rail Company, Inc.**, Chicago, IL (US)

(*) Notice: Subject to any disclaimer, the term of this patent is extended or adjusted under 35 U.S.C. 154(b) by 231 days.

(21) Appl. No.: **12/861,713**

(22) Filed: **Aug. 23, 2010**

(65) **Prior Publication Data**

US 2012/0046811 A1 Feb. 23, 2012

(51) **Int. Cl.**

G06F 17/00	(2006.01)
B61H 9/00	(2006.01)
B60T 17/22	(2006.01)
B61H 13/02	(2006.01)

(52) **U.S. Cl.**

CPC ***B60T 17/221*** (2013.01); ***B60T 17/228*** (2013.01); ***B61H 13/02*** (2013.01)

(58) **Field of Classification Search**

USPC 701/19

See application file for complete search history.

(56) **References Cited**

U.S. PATENT DOCUMENTS

3,854,417	A *	12/1974	MacDonnell et al.	105/463.1
4,134,464	A *	1/1979	Johnson et al.	177/3
4,296,707	A *	10/1981	Kennedy	116/58 A
4,368,927	A *	1/1983	Billingsley et al.	303/18
4,801,288	A *	1/1989	Schmitt et al.	474/140
4,905,795	A *	3/1990	Rains	188/47
5,038,605	A *	8/1991	Tews et al.	73/129
5,394,137	A *	2/1995	Orschek	340/453
5,410,911	A *	5/1995	Severinsson	73/128
5,603,556	A *	2/1997	Klink	303/22.6
5,701,974	A *	12/1997	Kanjo et al.	188/1.11 R
6,006,868	A *	12/1999	Klink	188/1.11 W
6,014,600	A *	1/2000	Ferri et al.	701/34.4
6,170,619	B1 *	1/2001	Sheriff et al.	188/107
6,175,784	B1 *	1/2001	Jicha et al.	701/19
6,195,600	B1 *	2/2001	Kettle, Jr.	701/19
6,237,722	B1 *	5/2001	Hammond et al.	188/1.11 R
6,397,978	B1 *	6/2002	Jackson et al.	188/33
6,474,450	B1 *	11/2002	Ring et al.	188/1.11 R
6,739,675	B1 *	5/2004	Scharpf et al.	303/7
6,823,242	B1 *	11/2004	Ralph	701/19
7,114,596	B2 *	10/2006	Borugian	188/1.11 E

(Continued)

OTHER PUBLICATIONS

Topolev, V.P.; Automation of Strain-gauge Crane Scales; Feb. 1966; Translated from Izmeritel'naya Tekhnika, No. 2, pp. 81-82.*

(Continued)

Primary Examiner — Fadey Jabr
Assistant Examiner — Krishnan Ramesh
(74) *Attorney, Agent, or Firm* — Fox Rothschild LLP

(57) **ABSTRACT**

A device for monitoring the status of a railcar handbrake having a hand operated handle, which device has a load bearing member configured to be inserted in the linkage of a railcar handbrake system so that the force applied to the brake system passes through the load bearing member. A strain gauge mounted on the load bearing member measures the strain. The information from the strain gauge is indicative of the force applied by the handbrake to the brake and is used to determine the status of the handbrake. Means for determining motion of the railcar is also provided. In one form, if it is determined that the brake is on and the railcar is in motion, information, such as an alarm, is transmitted. A system and method of monitoring a railcar handbrake are also provided.

28 Claims, 4 Drawing Sheets

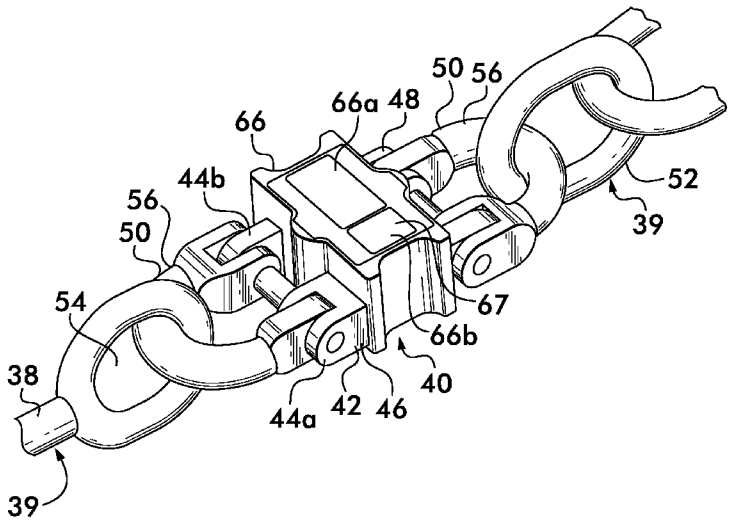

Amsted Ex. 2005
IPR2023-00538

(56) **References Cited**

U.S. PATENT DOCUMENTS

7,180,019	B1 *	2/2007	Chiou et al.	200/61.45 R
RE40,099	E *	2/2008	Stephens et al.	177/147
8,033,236	B2 *	10/2011	Michel et al.	116/52
8,060,264	B2 *	11/2011	Oestermeyer et al.	701/19
2002/0111726	A1 *	8/2002	Dougherty et al.	701/29
2003/0058091	A1 *	3/2003	Petersen et al.	340/457.3
2003/0097885	A1 *	5/2003	Kell	73/862
2007/0062765	A1 *	3/2007	Michel et al.	188/1.11 R
2007/0084676	A1 *	4/2007	Vithani et al.	188/1.11 E
2007/0151812	A1 *	7/2007	Michel et al.	188/33
2008/0179269	A1 *	7/2008	Bachman	212/276
2008/0252515	A1 *	10/2008	Oestermeyer et al.	342/357.01
2009/0001226	A1 *	1/2009	Haygood	246/169 S
2010/0200307	A1 *	8/2010	Toms	177/163
2012/0037435	A1 *	2/2012	Duehring	180/11
2012/0046811	A1 *	2/2012	Murphy et al.	701/19

OTHER PUBLICATIONS

Balkov, P.P. et al.; Electrical Strain-gauge Scales; Oct. 1961; Translated from lzmeritel'naya Tekhnika, No. 10, pp. 17-20.*

MSI-9300 Series User Guide, Rev 1 Jul. 27, 2002 for SW Ver 1-1.*

Dillon EDxtreme Dynamometer and Crane Scale User's Manual, Dec. 2008 EDX_U.P65 PN 29808-0011 Issue AC.*

See attached Information Disclosure Statement for Salco Technologies, LLC Handbrake Sensor—Brochure dated Mar. 30, 2007.

* cited by examiner

Amsted Ex. 2005
IPR2023-00538

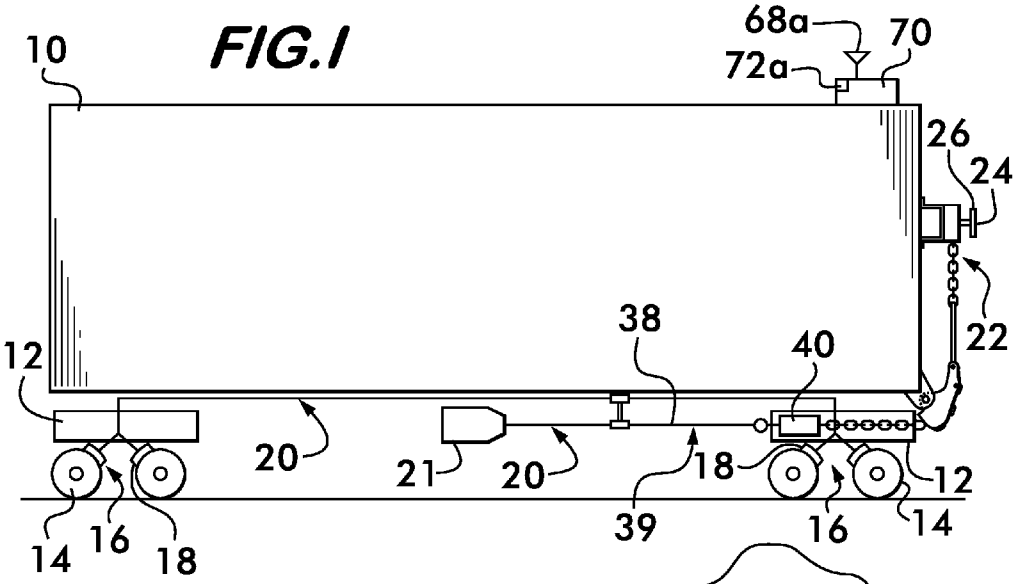
FIG.1
10
68a
70
72a
26
24
22
38
40
12
20
21
20
18
12
39
16
14
14
16
18

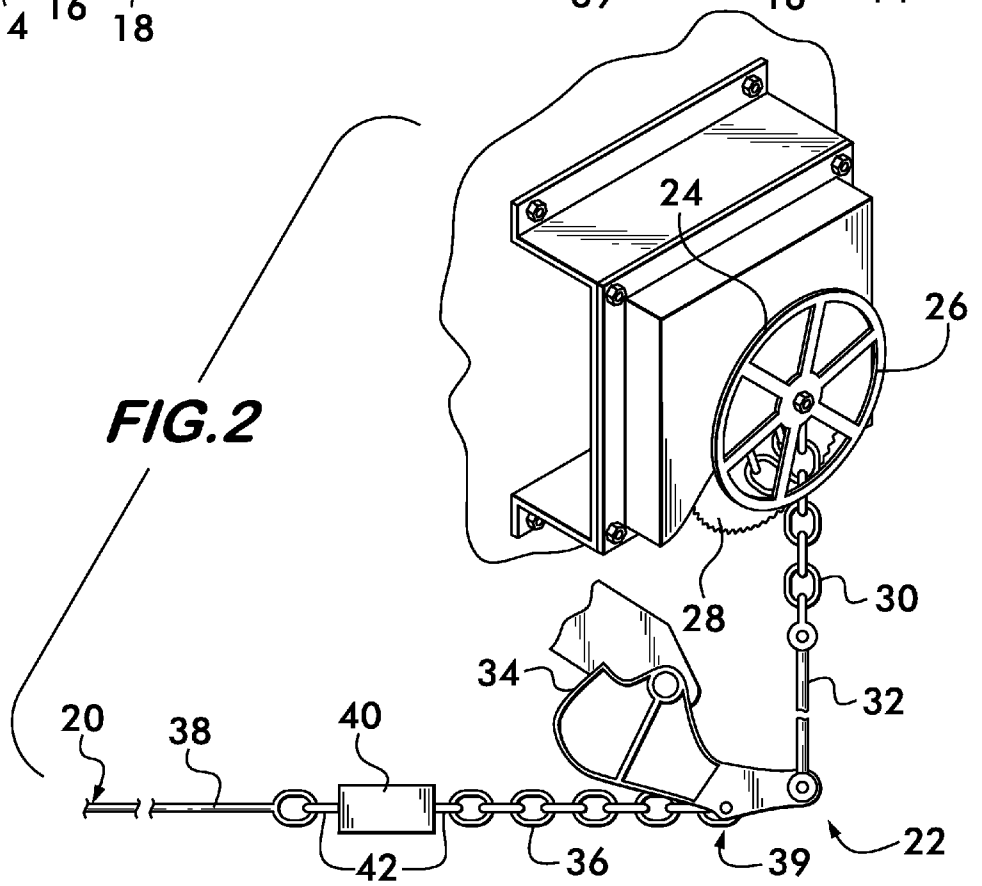
FIG.2
24
26
28
30
34
32
20
38
40
42
36
39
22

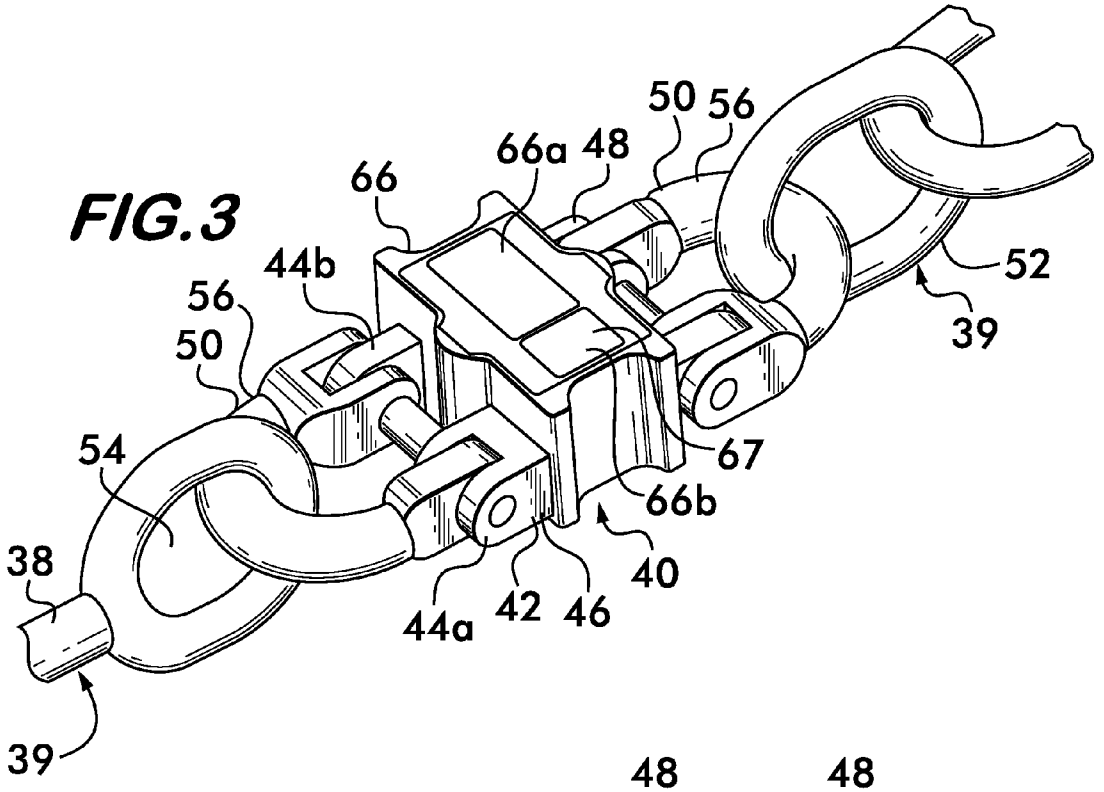
50
56
66a
48
66
44b
56
50
52
39
54
67
66b
38
40
44a
42
46
39

FIG.3

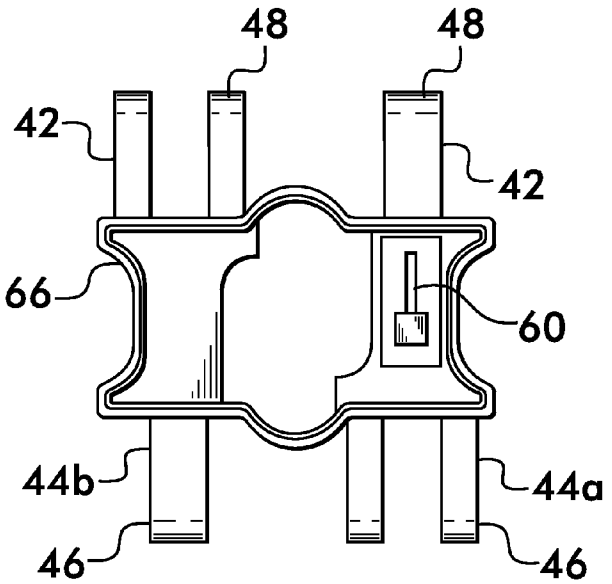
48
48
42
42
66
60
44b
44a
46
46

FIG.5

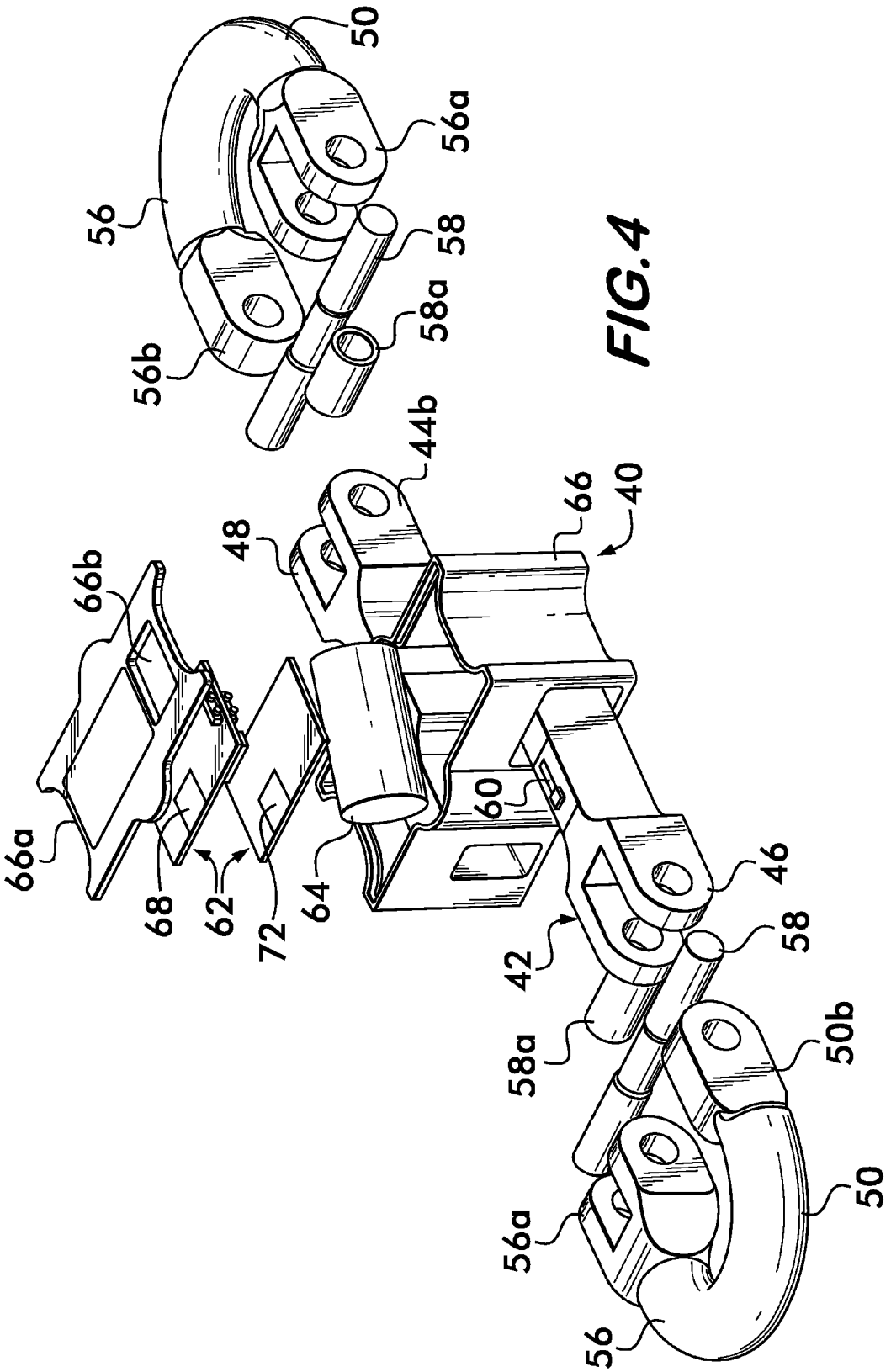

FIG. 4

Amsted Ex. 2005
IPR2023-00538

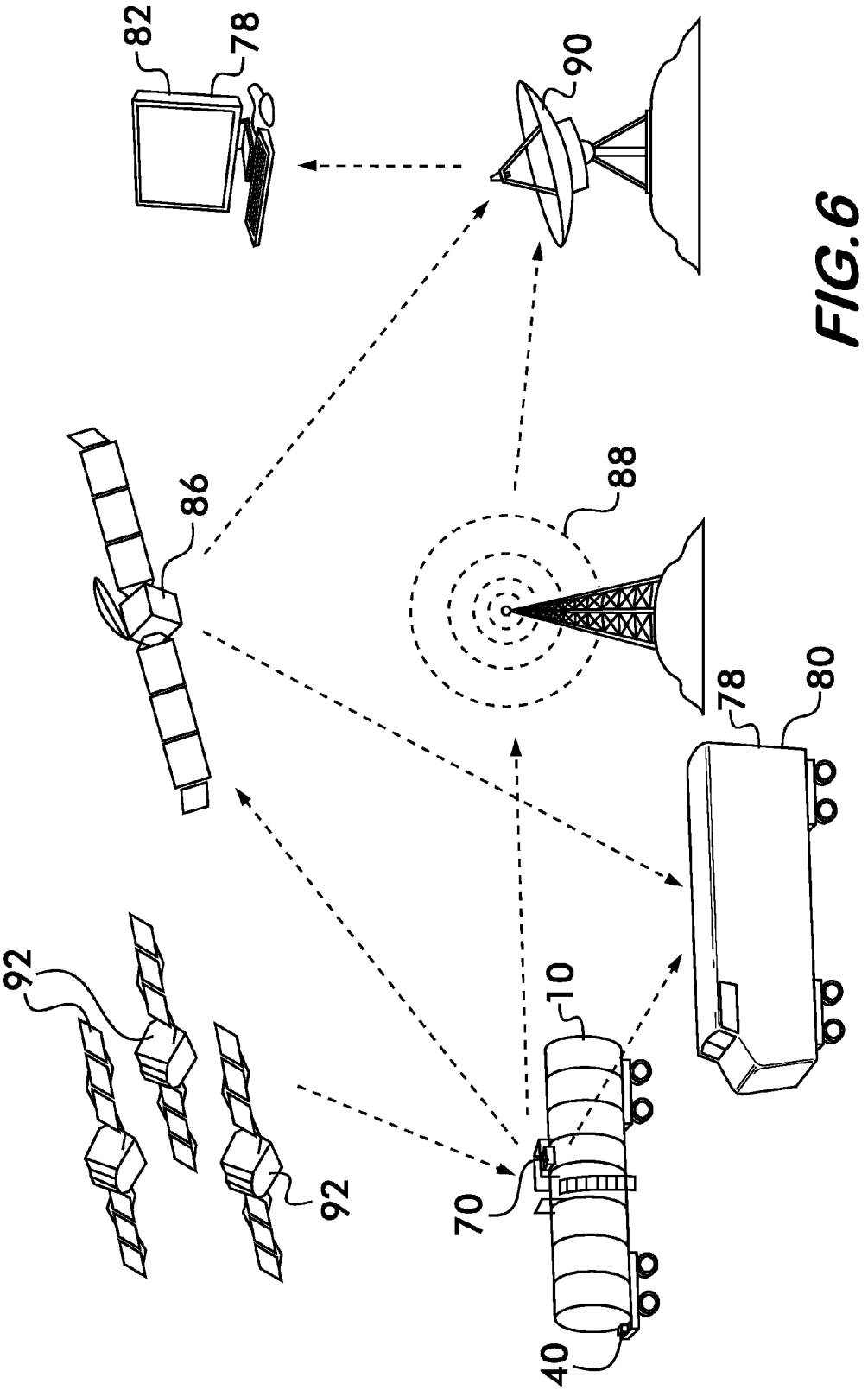

FIG.6

Amsted Ex. 2005
IPR2023-00538

RAILCAR HANDBRAKE MONITOR

BACKGROUND OF THE INVENTION

1. Field of the Invention

The present invention relates to a device, system and method for monitoring the status of a railcar handbrake, and for providing an alert when the car is in motion while the handbrake is applied.

2. Description of the Related Art

Wheel damage in the railroad industry is responsible for significant maintenance costs. A common cause of wheel damage is moving the railcar while the handbrake is applied. If the handbrake is applied when the railcar is moving, the wheels of that car will not turn. Instead, they will slide on the rail, resulting in damage to the wheels, e.g., slid flats, spalling, shelling, etc. If these conditions are sufficiently bad to cause an individual wheel to be condemned, the wheel set must be replaced. Replacement of wheel sets requires the railcar to be removed from service and is one of the most expensive maintenance items for railcars.

Each railcar typically has a brake rigging on the underside of the railcar that includes an arrangement of rods, levers and chains forming a mechanical linkage connected to brake shoes which can be applied to rub against the train wheels, using friction to slow and stop the train. This brake rigging can be operated by an air cylinder that is part of a centralized train air brake system controlled from a central location, e.g., the locomotive. The air brake system is used to slow and stop entire trains.

Most railroad cars also have manually-operated mechanical hand brake devices that can set and release the brakes. They are used to maintain railcars at rest such as when in the rail yard or at a customer for loading and unloading. Manually operated handbrake devices typically operate at least a portion of the same brake rigging on the railcar used by the air brake system, bypassing the air cylinder to engage the brake shoes.

In one form, the handbrake has a manually operable hand wheel located on the B end of the railcar. The hand wheel is attached through gearing to a rotatable axle which in turn is attached to a chain running down the side of the railcar. The gearing provides mechanical advantage allowing a person to operate the hand wheel. The chain may be directly connected, or via a rod, to a bell crank or shive wheel which in turn connects to a chain and top rod that runs under the undercarriage of the railcar, and which ultimately links to the brake rigging. Turning of the hand wheel turns the gear to gather up the chain around the axle, pulling the chain in tension and pivoting the bell crank, which in turn tensions the chain and top rod under the undercarriage of the railcar to operate the brake rigging, and thereby apply the brakes. Sufficient tension will prevent the wheels from turning. Turning the hand wheel in the opposite direction will release the brakes. Other forms of handbrakes include a hand lever that is operated manually to apply tension to the chain or rod that operates the brakes in a similar manner as described above.

Since a handbrake is specific to a single railcar, it is not uncommon for inspectors to overlook an individual railcar when checking to ensure that the handbrakes are released. Thus the railcar may be moved with the handbrakes applied.

Presently, there is no reliable system for monitoring the status of a handbrake and for indicating movement of the railcar with the handbrakes applied. One common type of device, as disclosed in U.S. Pat. No. 3,854,417, provides a visual signal, such as an indicator flag, which extends on the railcar when the handbrake is on. However, an inspector must be sufficiently close to see the signal, and it is unlikely to be seen by the train crew when the car is part of a long train. Another device, disclosed in U.S. Pat. No. 4,296,707, provides a whistle sound when the handbrake is on and air is applied to the air brake system. This requires that someone be sufficiently close to hear the whistle. Accordingly, improved monitoring devices are desirable.

SUMMARY OF THE INVENTION

The present invention provides a device for monitoring the status of a railcar handbrake. The device includes a load bearing member configured to be inserted in the brake linkage so that a force applied to the brake through the brake linkage passes through the load bearing member. A strain gauge is mounted on the load bearing member to sense the force on it, and electrical circuitry is electrically connected to the strain gauge for obtaining information regarding the status of the handbrake. A power source is electrically connected to the electrical circuitry for providing power thereto. In one embodiment, if a threshold level of force is measured by the monitoring device, the brake is determined to be on. Information regarding the status of the handbrake, including whether it is on or off, can be communicated, such as by wireless transmission, to a remote receiver away from the railcar such as the locomotive or a remote monitoring station. A motion detection device can also be provided. If the hand brake is on and railcar movement is detected, information indicating that the railcar is in motion with the handbrake on can be transmitted to the remote receiver.

The present invention also provides a system for monitoring the status of a railcar handbrake of a railcar. The system includes a brake that engages a railcar wheel, the brake being operable by applying force thereto. A hand operated handle is mounted on the railcar and is operable to apply force to the brake. Connecting the handle to the brake is a linkage through which the force is transferred from the handle to the brake. A load bearing member is positioned in the linkage so that at least a portion of the force applied by the handle to the linkage passes through the load bearing member. A strain gauge is mounted on the load bearing member to measure the strain in it, and electrical circuitry is in communication with the strain gauge for receiving signals therefrom. The strain gauge measures the force on the load bearing member which is indicative of the status of the handbrake. The system can further include a communication device mounted on the railcar, the communication device being communicatively connected to the railcar brake monitoring device for receiving information therefrom. The communication device has a wireless communication device for transmitting information about the status of the railcar brake to a remote receiver. The system can further include a motion detection device for detecting motion of the railcar. If the brake is on and the railcar is moving, information, such as an alarm, can be sent to a remote receiver.

The present invention also provides a method of monitoring the status of a railcar brake operated by applying force to a linkage for engaging the brake. The method includes the following steps: (a) sensing the force applied to the linkage via a sensor; (b) determining if the force sensed in step (a) exceeds a predetermined threshold level chosen to indicate that that the brake is on; (c) detecting motion of the rail car; and (d) if in step (b) it is determined that the brake is on, and in step (c) it is determined that the railcar is in motion, causing a transmission of information indicating motion of the railcar with the brake on.

Amsted Ex. 2005
IPR2023-00538

BRIEF DESCRIPTION OF THE DRAWINGS

The present invention will be more fully and completely understood from a reading of the Description of the Preferred Embodiment in conjunction with the drawings, in which:

FIG. **1** is a schematic of a railcar and railcar handbrake system showing the brake rigging and handbrake;

FIG. **2** is a schematic view of the handbrake linkage showing the monitoring device connected thereto;

FIG. **3** is a perspective view of the handbrake device of the present invention shown connected to the brake linkage of the railcar;

FIG. **4** is an exploded view of the handbrake device shown in FIG. **3**;

FIG. **5** is a top view of the handbrake device housing with various components removed showing the inter-links and the strain gauge; and

FIG. **6** is a schematic view of an exemplary system for monitoring and reporting the status of a railcar handbrake using the device shown in FIG. **3**.

DESCRIPTION OF PREFERRED EMBODIMENTS

A typical railcar brake system that includes a handbrake monitoring device of the present invention is now described with initial reference to FIGS. **1** and **2**. A railcar **10** has trucks **12** supported on railcar wheels **14** as is known in the art. Brakes **16**, which include brake pads **18**, are urged against the wheels **14** to apply a braking force. The brakes are moved into and away from the wheels **14** by brake rigging **20** typically mounted underneath the railcar **10**. As is known in the art, the brake rigging can include rods, levers and chains that are moved to operate the brakes **16**. The brake rigging **20** can be operated by the train air brake system as is known in the art. Air brake systems typically include a pneumatic piston/cylinder unit **21** operatively linked to the rigging **20** so that the brakes can be controlled from a central location, such as the locomotive, by directing compressed air to the pneumatic piston/cylinder unit to move the rigging. It is appreciated that the air brake system is an automated system allowing braking of all the railcars of a train from a single location, and is used for slowing and stopping the entire train.

A railcar manually-operated handbrake **22** allows railcars **10** to be held stationary even when separated from a train, and without use of the air braking system. Each railcar **10** would have its own handbrake **22**, which typically includes a hand operated handle **24** attached to the side of the railcar **10**. The handle **24** is typically a hand wheel **26** but can take other forms such as a hand operated lever. The handle **24** in this case includes a small gear (not shown) for driving a larger gear **28** which has an axle as is known in the art. The gearing ratio provides mechanical advantage allowing a person to operate the hand wheel **26**. A chain **30** is connected to the axle so as to be capable of being wound around it upon rotation of the axle. The chain is connected to a rod **32** which in turn is connected to a bell crank **34** which converts the vertical movement of the chain **30** on the side of the railcar to horizontal movement underneath the railcar **10**. A second chain **36** connected at one end to the bell crank **34** and at its other end to a top rod **38** is ultimately connected to the brake rigging **20** as is well known in the art. It is seen that manual rotation of the handle **24** in one direction pulls the chain **30** upward. This in turn rotates the bell crank **34** counterclockwise as oriented in FIG. **2**, which in turn moves the top rod **38** rightward, thereby operating the brake rigging **20** to engage the brakes **16**. The various components connecting the handle **24** to the brake rigging **20**, including the various chains and rods and bell crank, are referred to herein generally as the handbrake linkage **39**. It is appreciated that turning the handle **24** applies a force or tension to the linkage **39**, which force is transferred through the linkage **39** to the brakes **16**. The greater the force applied by the handle **24**, the greater the braking force on the wheels **14**. The exact configuration of the handbrake linkage **39** varies depending on the railcar. For example, in some railcars the handbrake **22** will connect to the brake rigging **20** so as to operate the wheels **14** of only one truck **12**, not the wheels of both trucks as in other cars.

A brake monitoring device **40** is installed preferably in the handbrake linkage **39** to monitor the force applied by the handbrake **22**. In the illustrated embodiment, and with further reference to FIGS. **3**, **4** and **5**, the monitoring device **40** is a self contained unit that includes a load bearing member **42** inserted in the linkage **39** of the railcar handbrake **22** system so that the force applied to the brake **16** via the handle **24** passes through the load bearing member **42**. Put another way, the force applied to the brake **16** via the handle **24** is transmitted through the load bearing member **42** to the brake. In the preferred embodiment, the load bearing member **42** is formed of two inter-links **44***a*, **44***b* adjacent and extending parallel to one another as shown, and U-shaped connectors **50** connecting the inter-links to the linkage **39**. Each of the inter-links **44***a*, **44***b* have first and second ends **46**, **48** connected to one another and to the linkage **39** via the U-shaped connectors **50** which are configured to connect on one end of the inter-links to a chain link **52** and on the other end to a rod opening **54** of the top rod **38** as shown. Any suitable means for being inserted into the linkage **39**, depending on the linkage component to which it is to be connected, may be used. In the illustrated embodiment, each connector **50** takes the form of a clevis **56** having a forked end and a non-forked end. Clevises readily fit in existing chain links of hand brake systems **22**. For example, the clevis **56** on the right in FIG. **4** has a forked end **56***a* for receiving a complimentary non-forked end of the inter-link **44***a*, and a non-forked end **56***b* for being received in corresponding forked end of the other inter-link **44***b*. The clevis **56** on the left in FIGS. **4** and **5** has a similar construction with the order of the forked and non-forked ends switched as shown. The connector devises **56** and inter-links **44***a*, **44***b* are connected to one another via locking pins **58** and pin clips **58***a* as shown. The load bearing link **42**, pins **58**, etc., are preferably made of carbon steel or other suitable material having the requisite material strength. For example, the inter-links should be configured for a maximum typical brake load of 2400 lbs, some railcars going as high as 4800 lbs. It is believed that configuration for a maximum strength of 18,000 lbs is preferred. Powder coated carbon steel is a preferred material to prevent rust. As possible with the illustrated embodiment, the monitoring device **40** is preferably capable of being installed and replaced with standard tools.

Mounted on the load bearing member **42** is a sensor **60** for sensing the force applied to the linkage **39** for operating the handbrake **22**. In the illustrated embodiment, the sensor takes the form of a strain gauge **60** to measure the strain in the member **42** as is known in the art (FIGS. **4** and **5**). The strain gauge **60** can be used to determine the force (load) on the load bearing member **42**. In the illustrated embodiment, the strain gauge **60** is attached to one of the load bearing member inter-links, here inter-link **44***a*, in any known manner. In the preferred embodiment, a low power foil full bridge gauge is mounted to the steel inter-link using an adhesive, such as a cyanoacrylate, in a manner to compensate for temperature changes as is known in the art. A second strain gauge could be placed on the other inter-link **44***b*, and the two strain mea-

Amsted Ex. 2005
IPR2023-00538

surements summed. However, it is believed that a strain gauge on one inter-link is satisfactory as the strain on the two inter-links **44***a*, **44***b* tends to average out.

Electrical circuitry **62** is provided in electrical communication with the strain gauge **60** for receiving signals therefrom and determining the status of the handbrake. The electrical circuitry **62** is preferably wired to the strain gauge **60** as is known in the art for receiving signals, e.g., voltage signals, indicative of the strain measured by the gauge **60**. The strain measured can be calibrated to measure force or load as is well known in the art. The electrical circuitry **62** includes the components and wiring to receive and process the signals from the strain gauge **60**. This can include, but is not limited to, analog and digital circuitry, CPUs, processors, circuit boards, memory, firmware, controllers, and other electrical items, as required to operate the strain gauge **60** and process the signals as further described below, including communication circuitry and devices, GPS circuitry and devices, and motion detection circuitry and devices. In the illustrated embodiment, two circuit boards **62** are provided, one board having the strain gauge circuitry, the other the communications circuitry.

It is appreciated that the electrical circuitry **62** of the monitoring device **40** obtains information related to the status of the handbrake **22**, here strain and force information on the linkage **39** due to the application of the handbrake **22**. For example, if the handbrake **22** is applied, the force in the linkage **39** will be higher than if the handbrake is not applied. The higher the force in the linkage, the greater the braking force applied. Thus the monitoring device **40** obtains information related to the status of the handbrake and which can be used to determine additional information related to the status of the handbrake, e.g., is the brake on or off and/or the percentage of maximum braking force applied. This additional information can be determined by the electrical circuitry **62** itself or by another device to which the information is communicated. In the illustrated embodiment, and as further described below, electrical circuitry **62** of the device **40** includes firmware that can use the information obtained from the sensor **60** to determine if the brake is on or off, among other capabilities, and then communicate this information elsewhere. Information related to the status of the handbrake **22** thus includes the raw data collected from the sensor **60** as well as the final determination of the status of the handbrake.

A power source **64** is electrically connected to the electrical circuitry **62** for providing power thereto. Any suitable power source can be provided. In the preferred embodiment, the power source **64** is provided by a C cell lithium-thionyl chloride battery of military grade mounted on the device **40**. Ultra low power electrical components that consume the minimum amount of power are preferred to extend the life of the device **40**.

The preferred embodiment of the device **40** further includes a housing **66** supported on the load bearing member **42** for housing the various components within it, e.g., the electrical circuitry **62** and power source **64**. As seen in the Figures, the load bearing member inter-links **44***a*, **44***b* pass through the housing **66**, and the strain gauge **60** is mounted on the portion of inter-link **44***a* within the housing **66**, the housing thereby containing the gauge **60**, wiring and other associated components within. The housing is preferably weatherproof, and made of any suitable material such as a UV rated polymer. The various components are mounted and electrically connected within the housing **66**. After the various components are installed within it, the housing **66** is filled with a potting material **67** to maintain, encapsulate and environmentally seal the components within. Any suitable electrical potting material capable of protecting the electric circuitry and components from the harsh railroad environment can be used, where harsh weather, UV exposure, humidity, vibration, mechanical impact, thermal shocks and abrasion might occur while the device is in operation. Such materials include epoxies, polyurethanes and silicone compounds. A flexible urethane suitable for electrical use and through which wireless signals of the frequencies to be used can be transmitted is preferred. The housing **66** includes a housing lid **66***a* having an opening **66***b* through which the potting material can be applied.

In one preferred embodiment, and with further reference to FIG. **6**, the monitoring device **40** forms part of a system for monitoring the status of the railcar handbrake **22** and for reporting the information regarding the brake status to a person or location where the information can be reviewed and acted upon as desired. This requires the communication of information related to the status of the handbrake to a remote receiver **78** located elsewhere. The remote receiver **78** can be any desired location to where the information is to be forwarded for review, display, recording, record keeping, alerts, phone alerts, e-mail alerts, monitoring, alarms, analysis, etc., and includes the locomotive **80** where the crew is located, a ground based computer system **82** where the information can be recorded, analyzed and reviewed, monitoring stations, to the owner of the railcar for monitoring, or any other remote receiver where it is desired to forward the information. The information can be forwarded to one or more remote receivers **78** depending on the configuration desired. The information can take any form including, but not limited to, telemetry, signals, data, alerts, alarms, and the like, whether analog, digital or other.

In one form, the means for communicating information related to the status of the handbrake from the monitoring device **40** to a remote receiver **78** includes a wireless communication device **68** mounted within the monitoring device **40** as part of the circuitry **62**. Any type of wireless device can be used, which includes any suitable device that can transfer information without the use of wires, e.g. radio frequency (RF), infrared light, laser light, visible light, acoustic energy, etc. For long life, it is preferred to provide a low power wireless communication device. Accordingly, rather than having the monitoring device **40** communicate directly with the remote receiver **78** via a satellite **86**, cellular telephone system **88**, or other far away receiver/transmitter which would require additional power, a separate communication device **70** can be provided on the train, preferably on the railcar **10** itself (FIGS. **1** and **6**), which is communicatively connected to the monitoring device **40** to receive information therefrom. The communication device **70**, also referred to herein as a communication management unit **70** (CMU) to distinguish it from other devices, includes any device capable of receiving information related to the status of the handbrake and transmitting information related to the status of the handbrake to the remote receiver **78**. Such a communication device **70** preferably is a single self contained unit that serves as a communications link to other locations, and has its own electrical circuitry, which can include, but not limited to, analog and digital circuitry, CPUs, processors, circuit boards, memory, firmware, controllers, power source, motion detectors, communication devices, etc. to process and forward the information received, carry out any programming and decision making as desired, and work with the monitoring device **40** as required. The CMU includes a wireless communication device **68***a* for communicating with remote receivers **78**. In one preferred embodiment, it can also communicate with, control and/or monitor other devices on the railcar **10**. An

Amsted Ex. 2005
IPR2023-00538

example of such a device and system is described in U.S. Pat. No. 7,688,218 which is incorporated herein by reference.

The brake monitoring device **40** can communicate information to the CMU **70** via the wireless communication device **68**, or by hardwire. Where a wireless device **68** is provided in the monitoring device **40**, such as for communicating with the CMU **70**, any suitable low power device can be used, an ultra low power 802.11 or 802.15.4 device operating in the 2.4 GHz frequency band being preferred. Wireless devices using a frequency-hopping spread spectrum (FHSS) method of transmitting radio signals and a Time Synchronized Mesh Protocol are preferred for security and ultra low power usage. Means to register the monitoring device **40** with the CMU **70** so that the monitoring device **40** is recognized and distinguished from other devices by the CMU are known in the art.

An example of a preferred system and method of monitoring and reporting the status of a railcar handbrake **22** is now described with reference to FIGS. **1** through **6**. The sensor **60**, here the strain gauge **60**, is added to the hand brake linkage **39** so as to be capable of sensing the force or load applied by the mechanically operated handle **24** to the linkage **39**. The sensor **60** is preferably mounted on the linkage **39** between the brake handle **24** and brake rigging **20** to sense the load due to the application of the handbrake. Insertion of the monitoring device **40** into the linkage **39** is one way to carry out this step; applying the sensor to a chain, rod or other load bearing component of the linkage **39** is another. The electrical circuit **62**, in communication with the strain gauge **60** for receiving signals therefrom, is capable of obtaining information regarding the status of the handbrake, here determining the amount of force on the inter-link of the load bearing member **42**. Next, using the firmware of the circuitry **62**, it is determined if the amount of force exceeds a predetermined threshold level indicating that the brake is on. For example, in a preferred embodiment, this threshold level is met if a force of 800 lbs or higher is measured in the linkage **39**, which is believed to be sufficient to apply the brakes. If it is determined that the brake **16** is on, information indicating that the brake is on can be communicated elsewhere to a remote receiver **78**. The monitoring device **40** and CMU **70** as part of a system can carry out this method, the device **40** communicating the information about the handbrake **22** to the CMU **70** via wireless communication device **68**, the CMU then forwarding this and/or other further processed information about the handbrake to the remote receiver **78** via the wireless communication device **68***a*. As an alternative embodiment, although likely requiring higher power components, brake monitoring device **40** can carry out this method by itself.

Although a basic preferred system and method has been described, it is appreciated that additional and more advanced steps are possible. An additional feature can include detecting motion of the railcar **10**. In one embodiment, this can be provided with a motion detection device **72** located in the brake monitoring device **40**, which can be part of the electrical circuitry **62**, or located in the CMU **70**. Such motion detection devices can include, but not limited to, accelerometers, motion sensors, gyroscopes, mechanical devices, tilt sensors, GPS devices, etc. Preferred accelerometers include ultra lower power devices such as digital accelerometer model number ADXL345 from Analog Devices, Inc.; preferred mechanical motion detectors include ultra low power devices such as tilt and vibration sensor model number SQ-SEN-200 from SignalQuest, Inc; preferred GPS devices include model Sirf Star IV GSD4t from SiRF Technology, Inc. Those skilled in the art appreciate that the motion detection device **72** can include one or more such devices that work together and which can be located together or remote from one another. If it is determined that the handbrake **22** is on and the railcar is in motion, information indicating that the brake is on and the railcar is in motion, such as an alarm, can be communicated via wire or by wireless communication device **68** to the CMU **70** for further processing and transmission to the remote receiver **78** where the information can be acted upon. Alternatively, this information regarding the status of the handbrake, brake on and railcar in motion, can be sent directly from the monitoring device **40** to the remote receiver **78**. The electrical circuitry **62** of the monitoring device **40** can include the necessary components and firmware to make this determination.

As discussed above, a motion detection device **72***a* can be alternatively located in the CMU **70**, or in the CMU in addition to the motion detection device **72** located in the monitoring device **40**. If motion is detected by the CMU **70**, and the CMU received information from the monitoring device **40** indicating that the brake is on, then the CMU would transmit the information indicating that the brake is on and the railcar **10** is in motion. It is appreciated that in alternative embodiments the monitoring device **40** need not make the determination that the brake is on or off, but that sufficient information regarding the handbrake, e.g., raw strain gauge or force data, can be communicated elsewhere, such as to the CMU **70**, where the final determination of the status of the handbrake can be determined, e.g., on or off. It is appreciated that the monitoring device **40** can be a self contained stand alone unit having all the components necessary to carry out the steps necessary to warn that the train is moving while the handbrake is on, or work with the CMU **70** or other devices to carry out the desired steps.

The transmission of the information regarding the handbrake **22** to the remote receiver **78** can be by any known means, e.g., satellite **86**, cell phone system **88**, etc. If the transmission is to be sent to the locomotive **80**, a direct transmission from the CMU **70** or monitoring device **40** could be used, although due to power requirements, it is preferred in the illustrated embodiment to have the monitoring device **40** transmit low power signals wirelessly to the CMU **70**, and the CMU transmit to the locomotive or other remote receiver **78**. The transmission of the information regarding the handbrake **22** to the remote receiver **78** can also be by way of an inter-train communication system such as an Electronically Controlled Pneumatic (ECP) Brake system as is known in the art, to which the monitoring device **40** and/or CMU can communicate by wire or wirelessly. As yet another option, the transmission of the status of the handbrake **22** to the remote receiver **78** can be by way of Automatic Equipment Identification, AEI data tag systems, as used by railroads and which typically have a wayside reader to wirelessly receive information from the railcars as they pass by.

It is appreciated that the device, system and method of the present invention can be tailored to the specific requirements of a user. Unlimited variations are possible. Further embodiments, steps, capabilities and advantages of the present invention are now described.

The monitoring device **40** is preferably installed anywhere in the linkage **39** connecting the handbrake handle **24** to the brake rigging **20**. In the embodiment described above and shown in FIGS. **2** and **3**, it is connected using the devises **56** at one end to a link **52** of the chain which is connected to the bell crank, and at the other end to the top rod **38**. The devises allow easy installation of the monitoring device **40** in the field.

Other embodiments for the load bearing member **42** can be used. For example, in another embodiment, two devises are attached to one another without the inter-links, and which

Amsted Ex. 2005
IPR2023-00538

have at least one strain gauge **60** mounted thereon. The housing **66** containing the various components can be mounted on or between the devises.

In operation, the monitoring device **40** can sample the strain gauge **60** intermittently to preserve power and increase battery life. For example, in one embodiment the monitoring device **40** powers up every 30 seconds to read the strain gauge **60**. Any other sample period can be used, e.g., 5 second periods are used in another embodiment.

Once the monitoring device **40** powers up to take a reading of the load on the handbrake, numerous samples can be taken and averaged. For example, 16 readings can be taken in less than a second after a small delay, e.g., 10-20 ms, to allow the system to settle once powered up. The 16 samples can be averaged as is known in the art. Debounce circuits to filter out noise as is known in the art can be used. The averaged reading is compared to a threshold value indicative of the force required to apply the handbrakes. If the threshold value is not met, i.e., the brake is off, the monitoring device **40** goes back to sleep, i.e., de-powers to conserve energy until the next sample period. If there is a change in status, additional steps are taken as discussed below. The status of the brake, at least the status based on the previous reading, is stored in memory within the monitoring device **40**, e.g., whether the brake is on or off.

As previously discussed, a load of 800 lbs force on the linkage **39** is believed sufficient to apply the brakes **16**. Accordingly, in the preferred embodiment, the monitoring device **40** is configured to determine that the brake is on at the threshold level of 800 lbs or higher, and off below 800 lbs. The device **40** can be configured for other threshold levels as may be warranted or desired.

In a preferred embodiment, if the handbrake is on, and railcar motion is detected, such information regarding the status of the handbrake **22** is transmitted to a remote receiver **78**. Where the motion detector device **72***a* is included in the CMU **70**, the information indicating that the handbrake is on is communicated from the monitoring device **40** to the CMU **70**, via wired or wireless transmission. If the CMU **70** determines that the railcar **10** is in motion, both conditions now satisfied—brake is on and railcar motion is detected—information of such condition is sent to the desired remote receiver location **78**. The information is preferably transmitted using various known means. There are various means to detect motion as previously discussed, one example using a GPS system **92** to monitor for movement of the railcar **10** a certain distance, such as 50 feet, upon which the railcar **10** is considered to be in motion. Other means, such as those using the devices previously discussed, e.g., the accelerometer, are also known.

If the threshold level of 800 lbs is met indicating that the brake is on, but there is no change in status from the previous reading, i.e., the previous sample determined that the brake is on, then the monitoring device goes back to sleep. Thus, if the brake **16** was on as determined by the previous reading of the monitoring device **40**, and someone merely turns the brake handle **24** to increase the load on the handbrake, there is no change in status and the monitoring device **40** goes back to sleep.

As an alternative, any change in status can cause information regarding the status of the handbrake to be sent. For example, if the brake **16** goes from on to off, or from off to on, information can be sent to the remote receiver reporting the change in status. As another alternative, information regarding the status of the brake can be sent after each sampling whether or not there is a change in status. This information, as discussed above, is preferably sent by wireless transmission from the monitoring device **40** to the CMU **70**, which then transmits information regarding the brake status to the remote receiver **78**.

An additional feature and advantage is the ability to measure the actual load on the linkage **39** applied by the handbrake **22** and communicate this information to the remote receiver **78**. For example, the monitoring device **40** can be programmed to make regular status checks, e.g., at regular intervals 4 times a day. At the predetermined time, the monitoring device **40** powers up and samples the strain gauge **60**. The information regarding the status of the handbrake **22**, here whether the handbrake is on or off, and/or the actual load measured, can be communicated to the CMU **70** for transmission to the remote receiver **78**. In addition to or instead of the actual load, the load measured as a percentage of the maximum load possible can be determined and forwarded to a remote receiver **78**. As another possibility, even if the brake is off (the load is less than 800 lbs), the actual load and or percentage of the maximum load on the linkage **39** of the handbrake **22** can be determined and forwarded, such information being capable of indicating if the brakes are partially applied.

Another feature and advantage is the ability to determine the distance the railcar **10** moved while the handbrake is on, and forwarding this information to the remote receiver **78**. This can be carried out by use of the motion detector, e.g., the GPS.

As discussed above, the present invention provides a handbrake monitoring device, system and method. One key feature and advantage is the ability to monitor the handbrake **22** and, if it is determined that the handbrake is on and the railcar **10** is in motion, such information can be sent warning that corrective action is required. Real time data about the handbrake can be collected and forwarded to a remote receiver **78**. Other embodiments provide for the determination and transmission of the actual load on the handbrake **22**, or even a determination and transmission of the load as a percentage of the maximum load possible on the handbrake. Also, regular samples of the status of the handbrake can be made and transmitted. In a preferred embodiment, the monitoring device can work with a CMU **70**, but it is contemplated that the monitoring device **40** can contain the suitable components to act as an individual unit. In summary, infinite variations are possible depending on the configuration desired.

It is understood that the foregoing description is intended to describe certain embodiments of the present invention, and is not intended to limit it in any way. The invention is to be read as limited by its claims only.

What is claimed is:

1. A system for monitoring the status of a railcar handbrake of a railcar, said system comprising:

a railcar wheel brake moveable into contact with a railcar wheel for applying a braking force to slow or stop said railcar;

a brake linkage mounted to the railcar and connected to said wheel brake, the railcar handbrake being operatively connected to said brake linkage for operating said wheel brake;

monitoring device having:

a load bearing member attached to the brake linkage so that a force applied to the brake through said brake linkage is transmitted through said load bearing member to said brake;

a strain gauge mounted on said load bearing member to measure the force being transmitted through said load bearing member;

Amsted Ex. 2005
IPR2023-00538

electrical circuitry in communication with said strain gauge for obtaining informaion regarding the status of the handbrake; and

a power source electrically connected to said electrical circuitry for providing power thereto.

2. A system in accordance with claim **1** wherein said load bearing member comprises two inter-links adjacent to one another and a connector removably attached to each of said inter-links.

3. A system in accordance with claim **2** wherein said strain gauge is mounted to at least one inter-link.

4. A system in accordance with claim **2** wherein said electrical circuitry is configured to determine whether the handbrake is on based on the force sensed on said load bearing member.

5. A system in accordance with claim **1** further comprising a housing supported on said load bearing member, said electrical circuitry being mounted within said housing.

6. A system in accordance with claim **1** wherein said electrical circuitry further comprises a wireless communication device for transmitting information regarding the status of the handbrake.

7. A system in accordance with claim **5** wherein a section of said load bearing member passes through said housing, said strain gauge being mounted on said section of said load bearing member.

8. A system in accordance with claim **1** further comprising a motion detection device for detecting motion of the railcar.

9. A system in accordance with claim **8** wherein said motion detection device is selected from the group consisting of a global positioning system (GPS) device, an accelerometer, and a mechanical motion sensor.

10. A system in accordance with claim **1** further comprising:

a communication management unit (CMU) which is positionable on the railcar, said CMU communicatively connected to said monitoring device to receive therefrom information regarding the status of the handbrake, said CMU further comprising a wireless communication device for transmitting information regarding the status of the handbrake to a remote receiver.

11. A system for monitoring the status of a railcar handbrake of a railcar in accordance with claim **10** further comprising a motion detection device for detecting motion of the railcar.

12. A system for monitoring the status of a railcar handbrake of a railcar in accordance with claim **11** wherein said CMU includes said motion detection device.

13. A system for monitoring the status of a railcar handbrake of a railcar in accordance with claim **11** wherein said monitoring device includes said motion detection device.

14. A system for monitoring the status of a rail comprising:

a railcar wheel on which said railcar is supported;

a wheel brake, mounted on the railcar moveable into contact with said railcar wheel for braking said railcar, and which wheel brake is operable by applying force thereto to increase a tension of the wheel brake against the railcar wheel;

a handbrake mounted on the railcar and which is operable to apply the force to the wheel brake;

a linkage connecting said handbrake to the wheel brake and through which the force s applied by the handbrake to the wheel brake;

a load bearing member positioned in said linkage so that at least a portion of the force applied to the linkage is transmitted to said brake through said load bearing member;

a strain gauge mounted on said load bearing member to measure the force in said load bearing member;

electrical circuitry in communication with said strain gauge for obtaining information regarding the status of the handbrake; and

a power source electrically connected to said electrical circuitry for providing power thereto.

15. A system for monitoring the status of a railcar handbrake in accordance with claim **14** further comprising a motion detection device for detecting motion of said railcar.

16. A system for monitoring a railcar handbrake in accordance with claim **15** further comprising at least one wireless communication device to communicate information regarding the status of the handbrake.

17. A system for monitoring the status of a railcar handbrake in accordance with claim **16** comprising a monitoring device that includes said load bearing member, strain gauge and electrical circuitry.

18. A system for monitoring the status of a railcar handbrake in accordance with claim **17**, further comprising:

a communication management unit (CMU) mounted on the railcar, said communication unit being communicatively connected to said railcar handbrake monitoring device for receiving information therefrom, said CMU having said at least one wireless communication device for transmitting information about the status of said railcar handbrake to a remote receiver.

19. A system for monitoring the status of a railcar handbrake in accordance with claim **17**, wherein said monitoring device includes said wireless communication device.

20. A system for monitoring the status of a railcar handbrake in accordance with claim **14** wherein said electrical circuitry is configured to determine whether the force measured by the strain gauge is above a predetermined threshold level indicating that the handbrake is on.

21. A system for monitoring the status of a railcar handbrake in accordance with claim **17** wherein said monitoring device includes said motion detection device, and wherein said circuitry is configured to determine if the handbrake is on and if the railcar is in motion, and if so, communicate this determination elsewhere.

22. A method of monitoring the status of a handbrake on a railcar which is operated for engaging a brake against a wheel of the railcar, said method comprising the following steps:

(a) measuring a force applied to a linkage by use of a sensor, said linkage being mounted on the railcar and connecting said handbrake to said brake so that operation of said handbrake can apply said force to said linkage to move the brake against the wheel;

(b) determining if the force measured in step (a) exceeds a predetermined threshold level chosen to indicate that the handbrake is on;

(c) detecting motion of the rail car: and

(d) if in step (b) it is determined that the handbrake is on, and in step (c) it is determined that the railcar is in motion, causing a transmission of information indicating motion of the railcar with the handbrake on.

23. A method of monitoring the status of a railcar handbrake in accordance with claim **22** wherein step (a) is carried out by a strain gauge.

24. A method of monitoring the status of a railcar handbrake in accordance with claim **22** wherein step (b) is carried out by a monitoring device attached to said linkage, said monitoring device including said sensor and electrical circuitry electrically connected to said sensor.

25. A method of monitoring and reporting the status of a railcar handbrake in accordance with claim **24** wherein step

Amsted Ex. 2005
IPR2023-00538

(d) is carried out by a communication device separate from and communicatively connected to said monitoring device.

26. A method of monitoring the status of a railcar handbrake in accordance with claim **22** further comprising the step of transmitting information indicating the amount of the force applied to the linkage.

27. A method of monitoring the status of a handbrake of a railcar, comprising:

(a) providing a railcar wheel brake and a linkage mounted to the railcar, said handbrake being operatively connected to said wheel brake through said linkage so that operation of said handbrake provides a force for operating said wheel brake by moving said wheel brake against said railcar wheel;

(b) measuring the force applied to said wheel brake due to operation of the handbrake by use of electrical circuitry;

(c) determining if the force measured in step (b) exceeds a predetermined threshold level chosen to indicate that the handbrake is on;

(d) detecting motion of the railcar; and

(e) if in step (c) it is determined that the handbrake is on, and in step (d) it is determined that the railcar is in motion, causing a transmission of information indicating motion of the railcar with the handbrake on.

28. A method in accordance with claim **27** wherein step (b) is carried out by measuring the force transmitted through said linkage.

* * * * *

Amsted Ex. 2005
IPR2023-00538