UNITED STATES PATENT AND TRADEMARK OFFICE

BEFORE THE PATENT TRIAL AND APPEAL BOARD

HUM INDUSTRIAL TECHNOLOGY, INC.
Petitioner

v.

AMSTED RAIL COMPANY, INC.
Patent Owner

Case IPR2023-00538
Patent 9,365,223

PATENT OWNER'S NOTICE OF APPEAL/CROSS-APPEAL

Pursuant to 35 U.S.C. § 142 and 37 C.F.R. 90.2(a), Patent Owner Amsted Rail Company, Inc. ("PO") hereby gives notice of their appeal under 35 U.S.C. § 141(c) to the U.S. Court of Appeals for the Federal Circuit from the Final Written Decision (Paper 55) issued by the Patent Trial and Appeal Board ("the Board") on August 7, 2024 in the above-captioned proceeding, and from all adverse orders, decisions, rulings, and opinions underlying the Final Written Decision. The Final Written Decision is attached as Exhibit A. Petitioner filed a Notice of Appeal on October 8, 2024. This notices also serves as a cross appeal pursuant to 37 C.F.R. § 90.3(a)(1); Fed. R. App. P. 4(a)(3).

In accordance with 37 C.F.R. § 90.2(a)(3)(ii), the expected issues on appeal include, but are not limited to, the Board's construction of "nominal operating conditions" and "severity level" as well as its decision that Petitioner showed by a preponderance of the evidence that claims 5-10, 18, 20, 21, 31, 32 are unpatentable as obvious over LeFebvre, that claims 13-17, 22 are unpatentable as obvious over LeFebvre and Barone, that claims 13-17 are unpatentable as obvious over Armitage and LeFebvre, and that claims 1 and 24 are unpatentable over Armitage, LeFebvre, Denny, and Provasnik and its decision denying Patent Owner's Contingent Revised Motion to Amend including its determinations that substitute claims 42-58 introduced new matter and that substitute claims 42-58 are unpatentable over the prior art, and the findings, rulings and conclusions

supporting or relating to those decisions as well as all other issues decided adversely to Patent Owner in any orders, decisions, rulings, or opinions. Those findings, rulings and conclusions include, but are not limited to: (1) the Board's findings that conflict with the evidence or record and/or are not supported by substantial evidence; (2) the Board's failure to properly consider evidence or record; and (3) the Board's implicit claim constructions.

This Notice of Appeal is being filed simultaneously with the Director of the U.S. Patent and Trademark Office, the Board, and the Clerk's Office for the U.S. Court of Appeals for the Federal Circuit.

Dated: October 9, 2024

/ Ryan N. Miller /
Ryan N. Miller, Reg. No. 68,262
FOX ROTHSCHILD LLP
2000 Market Street, 20th Floor
Philadelphia, PA 19103
Tele: 215-299-2704
Fax: 215-299-2150
Attorneys for Patent Owner

CERTIFICATE OF FILING

Pursuant to 37 C.F.R. § 104.2, the undersigned certifies that, in addition to being filed electronically through the Patent Trial and Appeal Board End to End system, the original version of the foregoing **PATENT OWNER'S NOTICE OF APPEAL/CROSS-APPEAL** was filed with the Director of the U.S. Patent and Trademark Office at the following address:

Director of the U.S. Patent and Trademark Office
c/o Office of the General Counsel
Madison Building East, 10B20
600 Dulany Street
Alexandria, Virginia

The undersigned also certifies that copy of the foregoing **PATENT OWNER'S NOTICE OF APPEAL/CROSS-APPEAL**, and the filing fee, were filed with the Clerk's Office for the U.S. Court of Appeals for the Federal Circuit via CM/ECF.

The undersigned also certifies that a copy of the foregoing **PATENT OWNER'S NOTICE OF APPEAL/CROSS-APPEAL** is being served on counsel of record by electronic mail. Electronic service was used with the agreement of the Patent Owner's counsel.

Dated: October 9, 2024

/ Ryan N. Miller /
Ryan N. Miller, Reg. No. 68,262
FOX ROTHSCHILD LLP
2000 Market Street, 20th Floor
Philadelphia, PA 19103
Tele: 215-299-2704
Fax: 215-299-2150
Attorneys for Patent Owner

EXHIBIT A

Trials@uspto.gov
571-272-7822

Paper 55
Entered: August 7, 2024

UNITED STATES PATENT AND TRADEMARK OFFICE

BEFORE THE PATENT TRIAL AND APPEAL BOARD

HUM INDUSTRIAL TECHNOLOGY, INC.,
Petitioner,

v.

AMSTED RAIL COMPANY, INC.,
Patent Owner.

IPR2023-00538
Patent 9,365,223 B2

Before JAMES P. CALVE, KEVIN W. CHERRY, and
MICHAEL L. WOODS, *Administrative Patent Judges*.

CHERRY, *Administrative Patent Judge*.

JUDGMENT
Final Written Decision
Determining Some Challenged Claims Unpatentable
Granting-In-Part and Denying-In-Part Patent Owner's Motion to Amend
35 U.S.C. § 318(a)

ORDER
Dismissing Patent Owner's Motion to Exclude
37 C.F.R. § 42.64(c)

I. INTRODUCTION

A. Background

Hum Industrial Technology, Inc. ("Petitioner") filed a Petition (Paper 1) requesting institution of *inter partes* review of claims 1–10, 13–18, and 20–32 ("the Challenged Claims") of U.S. Patent No. 9,365,223 B2 (Ex. 1001, "the '223 patent"). With our prior authorization (Paper 6), Petitioner filed a Motion to Correct the Petition (Paper 7), which Amsted Rail Company, Inc. ("Patent Owner") opposed (Paper 8). We granted Petitioner's Motion to Correct the Petition (Paper 9), and Petitioner filed a Corrected Petition (Paper 10, "Pet.").[1] Patent Owner filed a Preliminary Response (Paper 11). With our prior authorization, Petitioner filed a Reply to Patent Owner's Preliminary Response (Paper 12), and Patent Owner filed a Sur-reply (Paper 14). Applying the standard set forth in 35 U.S.C. § 314(a), we instituted an *inter partes* review as to all claims and grounds set forth in the Petition. Paper 15 ("Inst. Dec.").

After institution, Patent Owner filed a Patent Owner Response (Paper 20, "PO Resp."), Petitioner filed a Reply (Paper 26, "Pet. Reply"), and Patent Owner filed a Sur-reply (Paper 36, "Sur-reply"). Additionally, Patent Owner filed a Contingent Motion to Amend Patent Owner and a Request for Preliminary Guidance (Paper 21), and Petitioner filed an Opposition (Paper 28). We provided Preliminary Guidance on the Motion to Amend (Paper 34). Patent Owner filed a Revised Contingent Motion to Amend (Paper 35, "Revised MTA"), Petitioner filed an Opposition (Paper 41, "Opp. Revised MTA"), Patent Owner filed a Reply (Paper 43, "Revised

[1] Further references to "Petition" are to the Corrected Petition (Paper 10), unless otherwise indicated.

MTA Reply"), and Petitioner filed a Sur-reply (Paper 49, "Revised MTA Sur-reply"). Patent Owner also filed a Motion to Exclude (Paper 44, "PO MTE"), Petitioner filed an Opposition (Paper 47, "PO MTE Opp."), and Patent Owner filed a Reply (Paper 48, "PO MTE Reply"). A consolidated oral hearing was held for this proceeding as well as IPR2023-00539, on June 10, 2024, and the transcript is of record. Paper 54 ("Tr.").

We have jurisdiction pursuant to 35 U.S.C. § 6. This Decision is a Final Written Decision under 35 U.S.C. § 318(a) and 37 C.F.R. § 42.73 as to the patentability of the Challenged Claims. Petitioner bears the burden of proving unpatentability of the Challenged Claims. *Dynamic Drinkware, LLC v. Nat'l Graphics, Inc.*, 800 F.3d 1375, 1378 (Fed. Cir. 2015). To prevail, Petitioner must prove unpatentability by a preponderance of the evidence. *See* 35 U.S.C. § 316(e) (2018); 37 C.F.R. § 42.1(d) (2021). Having reviewed the arguments and the supporting evidence, we determine that Petitioner has shown, by a preponderance of the evidence, that claims 1, 5–10, 13–18, 20–22, 24, 31, and 32 of the '223 patent are unpatentable. Petitioner has not shown that claims 2–4, 23, and 25–30 are unpatentable. We grant-in-part and deny-in-part Patent Owner's Revised Motion to Amend. We dismiss Patent Owner's Motion to Exclude as moot.

B. Related Proceedings

The parties identify *Amsted Rail Company, Inc. v. Hum Industrial Technology, Inc. et al*, Case No. 4:22-cv-00445-AGF (E.D. Mo.), as a related matter. Pet. 2; Paper 5 (Patent Owner's Mandatory Notices), 1. Petitioner also states that it has filed petitions for *inter partes* review challenging claims of several patents related to the '223 patent in IPR2023-

00539 (U.S. Patent No. 9,981,673 B2) and IPR2023-00540 (U.S. Patent No. 10,137,915 B2). *See* Pet. 2 (identifying the related patents).

C. Real Parties in Interest

Petitioner identifies its real parties in interest as Hum Industrial Technology, Inc. and Dr. Brent Wilson. Pet. 1.

Patent Owner identifies Amsted Rail Company, Inc., Amsted Digital Solutions, Inc., and IONX LLC as its real party in interest. Paper 5, 1.

D. The Asserted Grounds of Unpatentability and Declaration Evidence

Petitioner challenges the patentability of claims 1–10, 13–18, and 20–32 of the '223 patent on the following grounds:

Claim(s) Challenged	35 U.S.C. §[2]	Reference(s)/Basis
2–10, 18, 20, 21, 23, 25–32	103(a)	LeFebvre[3]
13–17, 22, 24	103(a)	LeFebvre, Barone[4]
1, 24	103(a)	LeFebvre, Denny[5], Provasnik[6]

[2] The Leahy-Smith America Invents Act ("AIA") included revisions to 35 U.S.C. § 103 that became effective on March 16, 2013. The '223 patent was filed on March 15, 2013. Ex. 1001, codes (22). Thus, we apply the pre-AIA version of § 103 here.

[3] U.S. Patent Publication No. 2007/0152107 A1, published July 5, 2007, filed Dec. 22, 2006 (Ex. 1005, "LeFebvre").

[4] U.S. Patent Publication 2007/0208841 A1, published Sept. 6, 2007, filed Jan. 19, 2007 (Ex. 1007, "Barone").

[5] U.S. Patent No. 5,633,628, issued May 27, 1997, filed Jan. 3, 1996 (Ex. 1008, "Denny").

[6] U.S. Patent No. 4,282,754, issued Aug. 11, 1981, filed Nov. 15, 1979 (Ex. 1009, "Provasnik").

Claim(s) Challenged	35 U.S.C. §[2]	Reference(s)/Basis
2, 3, 26–28	103(a)	Armitage[7]
4–10, 13–18, 20–23, 25, 29–32	103(a)	Armitage, LeFebvre
1, 24	103(a)	Armitage, LeFebvre, Denny, Provasnik

Pet. 6. Petitioner supports its challenge with a Declaration of Steven Ricca (Ex. 1003), and a Declaration of Steven Ricca in Support of Petitioner's Reply (Ex. 1033). Petitioner also submits the Declaration of Steven Ricca in Support of Petitioner's Opposition to Patent Owner's Motion to Amend (Ex. 1030) and the Declaration of Steven Ricca in Support of Petitioner's Opposition to Patent Owner's Revised Motion to Amend (Ex. 1035). Patent Owner supports its arguments with the following declarations: Expert Declaration of Dr. Michael Shamos (Ex. 2001), Expert Declaration of Dr. Michael Shamos in Support of Patent Owner's Response (Ex. 2010), Expert Declaration of Dr. Michael Shamos in Support of Patent Owner's Motion to Amend (Ex. 2158), Expert Declaration of Dr. Michael Shamos in Support of Patent Owner's Revised Motion to Amend (Ex. 2171), and Expert Declaration of Dr. Michael Shamos in Support of Patent Owner's Revised Motion to Amend Reply (Ex. 2172). Additionally, Patent Owner submitted a Declaration of William LeFebvre (Ex. 2008), Declaration of Andrew Martin (Ex. 2013), Declaration of Jay Monaco (Ex. 2014), Supplemental Declaration of William LeFebvre (Ex. 2169), and Declaration of Ryan Miller (Ex. 2170).

[7] U.S. Patent Publication No. 2011/0282540 A1, published Nov. 17, 2011, filed May 11, 2011) (Ex. 1006, "Armitage").

E. The '223 Patent

The '223 patent is titled "System and Method for Monitoring Railcar Performance." Ex. 1001, Code (54). The '223 patent issued from Application Serial No. 13/842,427 ("the '427 application"), filed Mar. 15, 2013. *Id.* at Codes (21), (22). The '427 application is a continuation-in-part of Application Serial No. 12/861,713 ("the '713 application"), filed on Aug. 23, 2010, issued as U.S. Patent No. 9,026,281 ("the '281 patent"). *Id.* at Code (63). The '223 patent also claims priority to provisional application No. 61/661,661, filed June 19, 2012. *Id.* at Code (60).

The '223 patent relates to a system for monitoring operation of a railcar. *Id.* at Code (57). The specification explains, due to automation of rail operations and increasing regulation to improve safety, the railroad industry needs to monitor the performance of trains, cars, and railcar trucks because even minor mechanical failures could lead to a catastrophic failure, not only of a single railcar, but of the entire train. *Id.* at 1:35–41. Various detectors have been used, but they lack the ability to apply heuristics to act on data gathered from more than one sensor or to detect operational deviations or trends which show deviations from nominal operating parameters. *Id.* at 1:65–2:1. The present invention uses sensing units or devices, referred to as "motes" that are deployed at various locations around the railcar, and includes circuitry that allows the mote to wirelessly transmit the sensor readings to an external receiver. *Id.* at 2:45–51.

An illustrative embodiment of such a device is depicted in Figure 1, reproduced below.

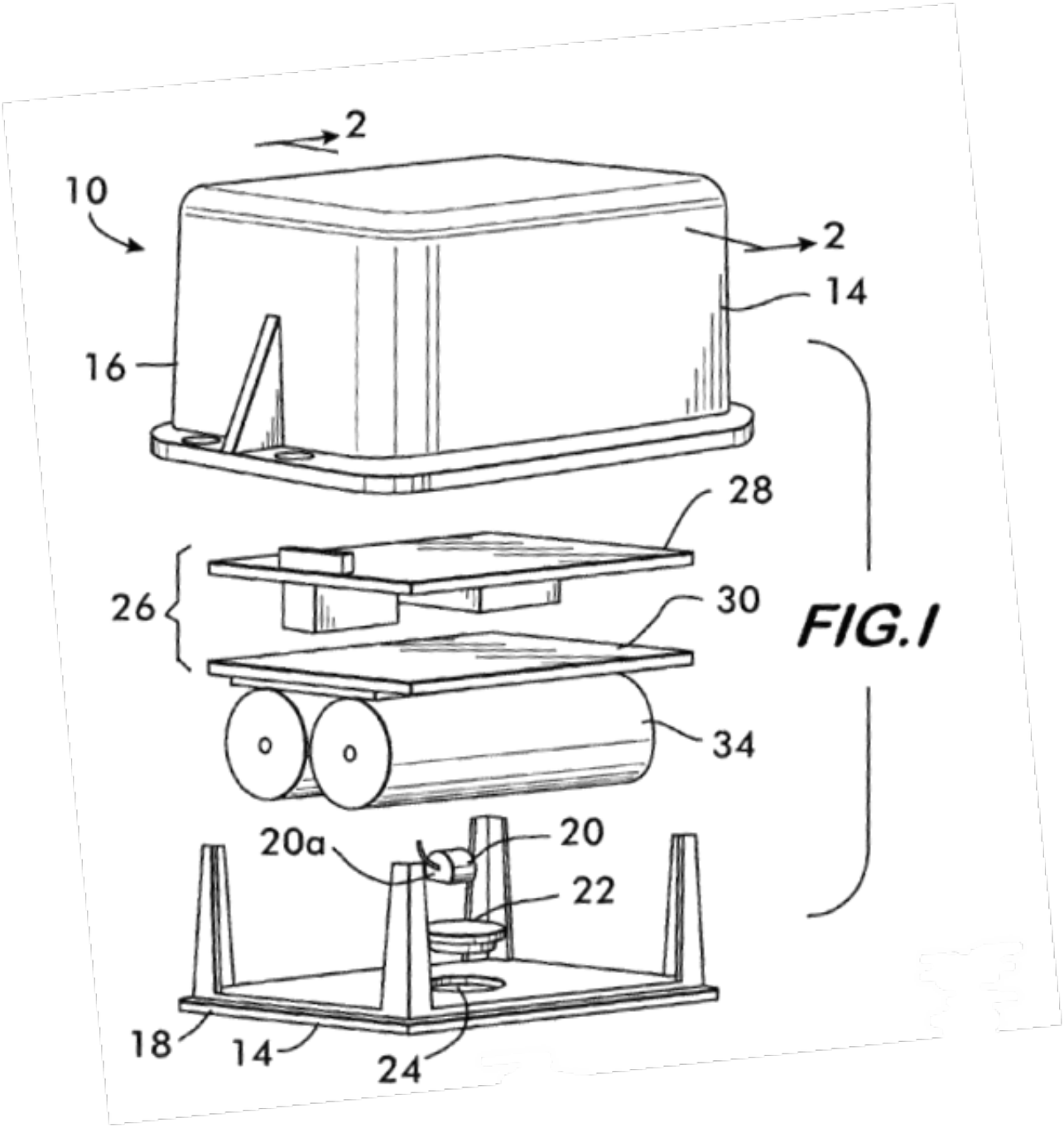

Figure 1 is an exploded perspective view of a mote. *Id.* at 3:27. Mote 10 is configured to be mountable to the surface of bearing adapter 12 of a railcar (*see* Fig. 3) to monitor the temperature of the wheel bearing, and includes housing 14 having lid section 16 and base section 18. *Id.* at 4:2–6. Sensor 20, such as temperature sensor 20a, is mounted within housing 14

and is thermally coupled to heat transfer element 22 which extends through opening 24 in housing 14. *Id.* at 4:23–28. Electrical circuitry 26 for mote 10 includes components and wiring to operate and/or receive and process the signals from sensor 20. *Id.* at 4:55–57. Circuitry 26 includes main board 28, which includes wireless communications circuitry, antennae and microprocessor and daughter board 30 including the circuitry to read the data from sensor 20. *Id.* at 4:66–5:2. Mote 10 also includes long-term power source 34. *Id.* at 5:24. Daughter board 30 includes power conditioning and management circuitry and includes a feature to conserve battery life which keeps mote 10 in a standby state and periodically wakes mote 10 to deliver readings from sensor 20. *Id.* at 5:26–29.

In embodiments where it is unsuitable to attach mote 10 to a surface to be monitored, an alternate mote can be used, as depicted in Figures 5 and 5A, reproduced below.

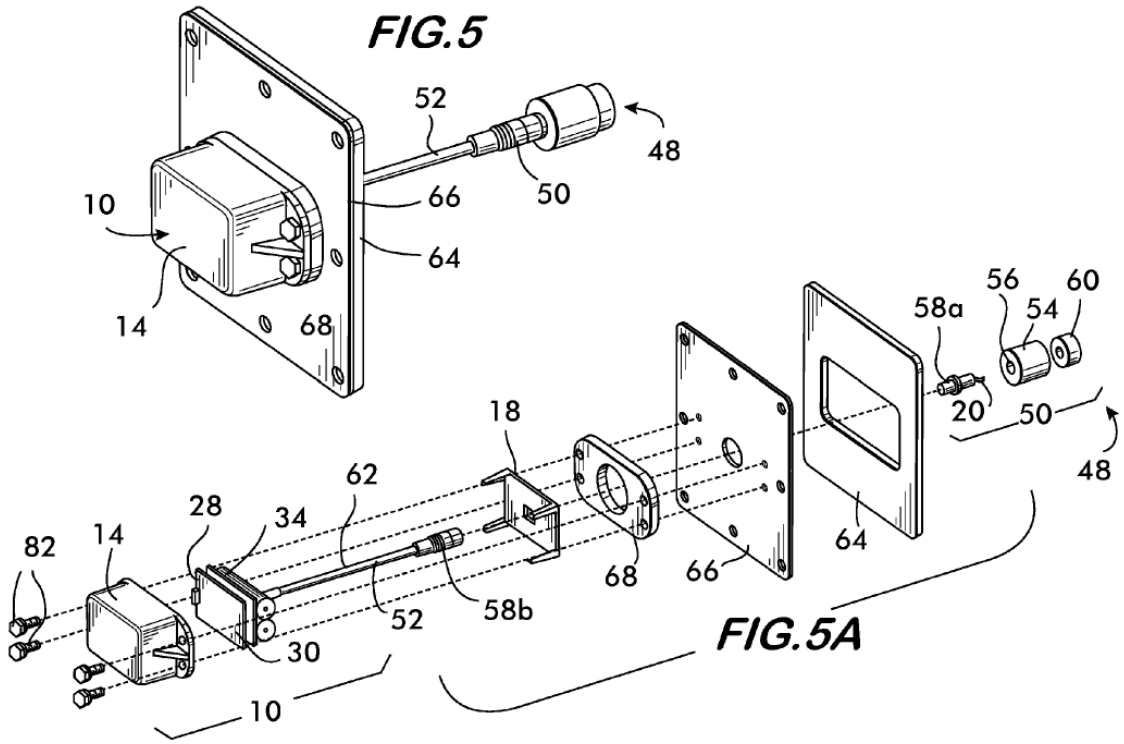

Figure 5 is a view of an alternative temperature sensor mote; and Figure 5A is an exploded view of the sensor mote of Figure 5 shown with components for mounting to the railcar. *Id.* at 3:36–38. In Figures 5 and 5A, mote 10 has temperature sensor 20 positioned in probe 48 that is spaced from housing 14. *Id.* at 6:16–19. In particular, temperature sensor 20 sits within sensor probe head 50 electrically attached to housing 14 via wires 52 using electrical connector 58a. *Id.* at 6:19–25. Ring shaped magnet 60 with an opening in its center fits around sensor 20 within head 50. *Id.* at 6:25–26.

The motes are arranged as part of a railcar monitoring system depicted in Figure 6, reproduced below.

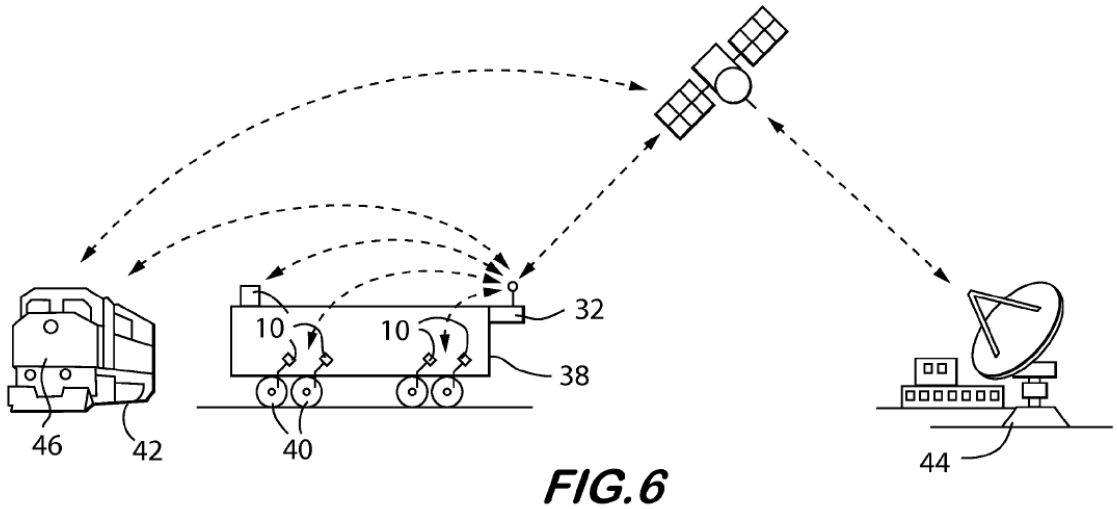

Figure 6 is a schematic diagram showing exemplary communications pathways. *Id.* at 3:41–42. Each mote 10 on railcar 38 is formed into an ad-hoc mesh network with other motes 10 on the same railcar and with a Communication Management Unit (CMU) 32 mounted on the same railcar. *Id.* at 5:12–16. Each mote 10 transfers its data to CMU 32, which transfer may occur directly or the data may be relayed by other motes in the mesh network to CMU 32. *Id.* at 5:16–20. CMU 32 collects data from each mote

and can also send instructions to the motes. *Id.* at 6:66–7:1. CMU 32 is any device capable of receiving data and/or alarms from one or more motes 10 and capable of transmitting data and alarm information to a remote receiver. *Id.* at 7:4–8. CMU 32 is a single unit that serves as a communications link to other locations, such as mobile base station 42 (e.g., locomotive 46) and land-based base station 44, and has its own circuitry, CPUs, processors, memory, power source, etc. to process the data received, and communicate with, control and monitor motes 10 on railcar 38. *Id.* at 7:8–8:4. CMU 32 is capable of performing advanced data analysis, using data collected from multiple motes 10, and may apply heuristics to draw conclusions based on the analysis. *Id.* at 8:5–7.

F. Illustrative Claims

Petitioner challenges claims 1–10, 13–18, and 20–32 of the '223 patent. Pet. 4–5. Of the challenged claims, claims 1, 2, 5, and 23 are independent. Claims 1, 2, and 5, reproduced below with Petitioner's identifiers for the claim limitations, are illustrative of the subject matter recited in the challenged claims.

[1 Pre] A sensor device for monitoring temperature on a railcar, comprising:

[1(a)] a housing mountable on a railcar;

[1(b)] a temperature sensor;

[1(c)] electrical circuitry in communication with said temperature sensor for obtaining information regarding the temperature being sensed, said electrical circuitry positioned within said housing;

[1(d)] a power source electrically connected to said electrical circuitry for providing power thereto, said power source positioned within said housing;

[1(e)] a probe external to said housing and which probe includes said temperature sensor and a magnet positioned to magnetically attract the part of the railcar against which the probe will be placed; and

[1(f)] a communication device capable of broadcasting information regarding the temperature sensed, said communication device positioned within said housing;

[1(g)] wherein the power consumption of said sensor device is managed by placing said sensor device in a standby state and periodically awakening said sensor device to collect readings from said temperature sensor and to transmit the information regarding the temperature sensed via said communication circuitry.

Ex. 1001, 15:32–55.

[2 Pre] A system for monitoring a railcar, comprising:

[2(a)] a plurality of sensor devices located on the railcar for monitoring parameters or conditions of the railcar, each of said sensor devices being separate from one another and including a sensor for monitoring one of said parameters or conditions of the railcar;

[2(b)] said plurality of sensor devices including at least one temperature sensor device having:

[2(c)] a housing;

[2(d)] a temperature sensor in thermal communication with an item of the railcar for which the temperature is being monitored, which item is external to said housing;

[2(e)] electrical circuitry in communication with said temperature sensor for obtaining information regarding the temperature being sensed, said electrical circuitry positioned within said housing;

[2(f)] a power source electrically connected to said electrical circuitry for providing power thereto, said power source positioned within said housing;

[2(g)] a communication device capable of broadcasting information regarding the temperature sensed via

wireless communication, said communication device positioned within said housing; and

[2(h)] a communication management unit, mounted on the railcar, capable of two way wireless communication with each of said plurality of sensor devices for receiving information therefrom, said communication management unit having a wireless communication device for broadcasting information about the parameter or condition being monitored.

Id. at 15:56–16:18.

[5 Pre] A system for monitoring the operation of a railcar comprising:

[5(a)] a. one or more sensor units mounted on said railcar, each of said sensor units monitoring an operating parameter of said railcar wherein each of said sensor units comprises

[5(b)] a sensor,

[5(c)] a power source,

[5(d)] a processor,

[5(e)] memory,

[5(f)] communication circuitry,

[5(g)] and software, stored in said memory and executed by said processor, said software performing the functions of collecting data from said sensor at periodic intervals,

[5(h)] b. a communication management unit, mounted on said railcar, said communication management unit in wireless communication with said one or more sensor units;

[5(i)] wherein said communication management unit applies heuristics to analyze data collected from said one or more sensor units

[5(j)] (a) to determine if an actual failure exists and

[5(k)] (b) to predict potential or imminent failures based on a statistical analysis of said collected data.

Id. at 16:27–44. Independent claim 23 recites similar limitations to claim 1, except it does not recite "a probe external to said housing." *Id.* at 18:9–30. Claims 3, 4, and 26–29 depend directly from claim 2. Claims 6–10, 13, 18–22, 31, and 32. Claims 11 and 12 depend from claim 10. Claim 14 depends from claim 13. Claims 15 and 16 depend from claim 14. Claim 17 depends from claim 16.

G. Level of Ordinary Skill in the Art

Relying on the declaration testimony of Mr. Ricca, Petitioner contends that an ordinarily skilled artisan for the '223 patent "would have been a person with at least a B.S. degree in electrical or mechanical engineering or a related field with at least two years' experience designing monitoring systems for railcar components, or monitoring systems for similar industrial equipment with rotating components." Pet. 14–15 (citing Ex. 1003 ¶ 45). Petitioner also contends that "[l]ess work experience could be compensated by a higher level of education, such as a master's degree, and vice versa." *Id.* Relying on the declaration testimony of Dr. Shamos, Patent Owner contends that an ordinarily skilled artisan for the '223 patent would have "at least a B.S. degree in electrical or computer science or a related field, with at least two years' experience with sensing systems for railcars or similar industrial equipment, including familiarity with wireless networks and heuristics and statistical data analysis for failure prediction." PO Resp. 3 (citing Ex. 2010 ¶ 13). Patent Owner also contends that "[l]ess work experience could be compensated for by a higher level of relevant education, and vice versa." *Id.*

The main distinction between Petitioner's ordinary skilled artisan and Patent Owner's is that Patent Owner further requires familiarity with

wireless networks. We note, however, that the monitoring systems of the asserted prior art include wireless networks. In view of this and based on the complete record before us, because Petitioner's requirement of experience designing railcar, train, vehicle, or any other similar monitoring systems includes some familiarity with wireless networks, we find (as we did in the Institution Decision) that Petitioner's level of ordinary skill in the art is consistent with the level of ordinary skill in the art reflected by the '024 patent and the prior art of record. *See* Inst. Dec. 15 (citing *Okajima v. Bourdeau*, 261 F.3d 1350, 1355 (Fed. Cir. 2001)). We note that our decision would be the same applying either party's definition of a person of ordinary skill in the art.

II. CLAIM CONSTRUCTION

In this *inter partes* review, claims are construed using the same claim construction standard that would be used to construe the claims in a civil action under 35 U.S.C. § 282(b). *See* 37 C.F.R. § 42.100(b) (2021). The claim construction standard includes construing claims in accordance with the ordinary and customary meaning of such claims as understood by one of ordinary skill in the art at the time of the invention. *See id.*; *Phillips v. AWH Corp.*, 415 F.3d 1303, 1312–14 (Fed. Cir. 2005) (en banc). In construing claims in accordance with their ordinary and customary meaning, we take into account the specification and prosecution history. *Phillips*, 415 F.3d at 1315–17.

If the specification "reveal[s] a special definition given to a claim term by the patentee that differs from the meaning it would otherwise possess[,] . . . the inventor's lexicography governs." *Phillips*, 415 F.3d at 1316 (citing *CCS Fitness, Inc. v. Brunswick Corp.*, 288 F.3d 1359, 1366

(Fed. Cir. 2002)). Another exception to the general rule that claims are given their ordinary and customary meaning is "when the patentee disavows the full scope of a claim term either in the specification or during prosecution." *Uship Intellectual Props., LLC v. United States*, 714 F.3d 1311, 1313 (Fed. Cir. 2013) (quoting *Thorner v. Sony Comput. Ent. Am., LLC*, 669 F.3d 1362, 1365 (Fed. Cir. 2012)).

Additionally, only terms that are in controversy need to be construed, and these terms need be construed only to the extent necessary to resolve the controversy. *See Realtime Data, LLC v. Iancu*, 912 F.3d 1368, 1375 (Fed. Cir. 2019) ("The Board is required to construe 'only those terms . . . that are in controversy, and only to the extent necessary to resolve the controversy.'") (quoting *Vivid Techs., Inc. v. Am. Sci. & Eng'g, Inc.*, 200 F.3d 795, 803 (Fed. Cir. 1999)).

A. "housing"

Patent Owner proposes that we construe the term "housing" to mean "an enclosure." PO Resp. 4. Patent Owner argues that its construction is consistent with (1) the way a POSA would understand the term based on the plain language of the claims and (2) the usage of the term "housing" in the specification. *Id.* (citing Ex. 2010 ¶¶ 14–20; Ex. 1001, 3:60–63, 4:5–14, 4:23–29, 15:19–24, Figs. 1, 2, 3, 3A). Patent Owner asserts that "[t]he term 'housing' as an enclosure is not merely a definition inherent in one embodiment of the '223 Patent, but rather the *only* practical definition one of ordinary skill could interpret from considering the entire specification as well as the claims." Sur-reply 1.

Petitioner responds that "housing" is "a broad term, and its plain and ordinary meaning is not limited to 'an enclosure.'" Pet. Reply 1. Although

it argues that no construction is necessary, Petitioner notes that "the plain and ordinary meaning of 'housing' is 'one or more parts that covers, encloses, supports, or protects other components.'" *Id.* n.1. (citing Ex. 1033 ¶ 5). Petitioner contends that Patent Owner relies on preferred embodiments and that the '223 patent contemplates that "the motes may be housed in 'alternative housings,' which are not limited to any particular configuration." *Id.* at 1–2 (citing Ex. 1001, 15:18–24; Ex. 1033 ¶ 6).

Although the claim construction arguments do not fully capture the parties' disagreement, they center on whether the claimed "housing" can include the adapter pads of LeFebvre. *See* PO Resp. 4–11; Pet. Reply 2–6; Sur-reply 2–5. We agree with Patent Owner that it does not.

We begin with the language of the claims. *See Phillips*, 415 F.3d at 1314. Claim 2 recites a "housing." It further recites there is a temperature sensor that monitors an item of the railcar "which item is external to said housing," and also that certain components of the sensor are "positioned within said housing." Ex. 1001, 15:56–16:18. Claims 1 and 23 have similar limitations. Thus, it is clear from the claims that the "housing" must be capable of having things "positioned within it." Although this does somewhat support Patent Owner's construction, it is not necessarily inconsistent with Petitioner's construction either.

We turn next to the Specification. *See Phillips*, 415 F.3d at 1315 (noting "claims 'must be read in view of the specification, of which they are a part'"). The Specification explains that "[i]n a preferred embodiment of the invention, the sensors are contained and deployed in a self-contained housing." Ex. 1001, 3:60–61. It goes on to describe that

> the mote 10 is configured to be mountable to the surface of bearing adapter 12 of a railcar for monitoring the temperature of the wheel bearing. The mote 10 has a housing 14 having a first or lid section 16 and a second or base section 18. Preferably, the housing sections 16 and 18 are composed of a hard plastic resistant to environmental damage, such as a UV rated polymer, e.g., a polycarbonate/ABS blend, and when fully assembled is weatherproof. After the various components are installed within the housing 14 as described below, a potting material (not shown) is provided through openings in the housing 14 to maintain, encapsulate and environmentally seal the components within.

Id. at 4:2–14. There is also description of how the mote is mounted on the railcar. *See* Ex. 1001, 6:9–64.

The detailed description of how the mote is constructed is consistent with Patent Owner's contention that "housing" refers to an enclosure. However, Petitioner argues that LeFebvre's description of sensors impregnated into LeFebvre's pad and encased in plastic is consistent with the discussion of a "potting material." *See* Pet. Reply 3–4. We note that although the "potting material" does encase the components in a manner similar to the way the plastic encases the components in LeFebvre, the "potting material" is used to fill the "housing" and "encapsulate and environmentally seal the components within [the housing]." *See* Ex. 1001, 4:2–14. Thus, on the whole, these portions of the Specification most consistently support Patent Owner's construction.

However, the portion of the Specification that draws the parties' heaviest focus is the penultimate paragraph of the Specification (before the claims), which states

> In another alternate embodiment of the invention, one or more motes may be housed in alternative housings or built in to the railcar itself. In one such embodiment, motes can be built into

> the form of an adapter pad similar to the type shown in U.S. Pat. Nos. 7,698,962 and 7,688,218, the disclosures of both of which are incorporated herein by reference, which could be adapted for use with the present invention.

Ex. 1001, 15:18–24.

Petitioner emphasizes the discussion of "alternative housings" arguing that the "adapter pad" described is one such "alternative housing."[8] Pet. Reply 1. Patent Owner instead argues that the "adapter pad" is not an "alternative housing," but an example of the second option—being "built into the railcar itself." PO Resp. 8 (emphasis omitted). Patent Owner notes that the statement continues that the motes are "built into the form of an adapter pad," just like the "built in to the railcar itself" statement that proceeds it. *Id.* (emphasis omitted). We agree with Patent Owner that there appears to be a distinction between embodiments where the sensors are built into the railcar or parts of the railcar and embodiments using "housings." *See* PO Resp. 8.

Our conclusion is further supported by the LeFebvre reference, which is incorporated by reference into the '223 patent. *See* Ex. 1001, 15:18–24. The LeFebvre reference explains the relationship between the adapter pad and the other structures of the railcar. *See* Ex. 1005 ¶ 19. In particular, LeFebvre explains that "adapter pad 16 is formed to seat upon the upper surface of adapter 4 which . . . seats in turn on the bearing." *Id.* LeFebvre explains that "[e]ach bearing transmits the loads which it carries and heat that it may generate through the adapter to the pad it carries and, thus, to the

[8] U.S. Patent No. 7,688,218 is the issued patent of the LeFebvre reference.

railcar truck." *Id.* ¶ 20. LeFebvre also refers to the Van Auken reference[9] for a description of "[t]he adapter and details of the pad as they relate to its function as a load bearing and attenuation means." *Id.* ¶ 19. All of the embodiments shown in Van Auken are structured to seat on the bearing adapter and be an integral part of the bearing assembly of a railcar. *See* Ex. 2006, Figs. 2, 5, 11, 12. Indeed, not only does Van Auken consistently describe the adapter pad as a component of the railcar, it also explains that the adapter pad "wears due to contact with [other components of the railcar]," and the adapter pad can be replaced when it is worn out. *See id.* ¶ 34.

Thus, we find that the intrinsic evidence of record, the Specification and the documents incorporated by reference therein support Patent Owner's interpretation of "housing." In particular, we agree with Patent Owner that, in the context of the '223 patent, a person of ordinary skill in the art would understand the term "housing" to mean "an enclosure," which is distinct from the embodiment described in the LeFebvre reference where the sensors are built into the railcar itself (i.e., the adapter pads).

A. Other Claim Terms

The parties do not dispute the construction of any other claim terms and we find that no other terms require express construction to resolve the controversy between the parties. Accordingly, we do not construe any other claim terms expressly. *See Realtime Data*, 912 F.3d at 1375 ("The Board is required to construe 'only those terms . . . that are in controversy, and only

[9] U.S. Patent Application Publication No. 2005/0268813 A1, pub. Dec. 8, 2005 (Ex. 2006, "Van Auken").

to the extent necessary to resolve the controversy.'") (quoting *Vivid Techs.*, 200 F.3d at 803).

III. ANALYSIS

A. Legal Standards – Obviousness

The U.S. Supreme Court set forth the framework for applying the statutory language of 35 U.S.C. § 103 in *Graham v. John Deere Co. of Kansas City*, 383 U.S. 1, 17–18 (1966):

> Under § 103, the scope and content of the prior art are to be determined; differences between the prior art and the claims at issue are to be ascertained; and the level of ordinary skill in the pertinent art resolved. Against this background, the obviousness or nonobviousness of the subject matter is determined. Such secondary considerations as commercial success, long felt but unsolved needs, failure of others, etc., might be utilized to give light to the circumstances surrounding the origin of the subject matter sought to be patented.

The Supreme Court explained in *KSR International Co. v. Teleflex Inc.* that

> [o]ften, it will be necessary for a court to look to interrelated teachings of multiple patents; the effects of demands known to the design community or present in the marketplace; and the background knowledge possessed by a person having ordinary skill in the art, all in order to determine whether there was an apparent reason to combine the known elements in the fashion claimed by the patent at issue. To facilitate review, this analysis should be made explicit.

550 U.S. 398, 418 (2007) (citing *In re Kahn*, 441 F.3d 977, 988 (Fed. Cir. 2006) ("[R]ejections on obviousness grounds cannot be sustained by mere conclusory statements; instead, there must be some articulated reasoning with some rational underpinning to support the legal conclusion of obviousness." (alteration in original))).

"Whether an ordinarily skilled artisan would have been motivated to modify the teachings of a reference is a question of fact." *WBIP, LLC v. Kohler Co.*, 829 F.3d 1317, 1327 (Fed. Cir. 2016) (citations omitted). "[W]here a party argues a skilled artisan would have been motivated to combine references, it must show the artisan 'would have had a reasonable expectation of success from doing so.'" *Arctic Cat Inc. v. Bombardier Recreational Prods. Inc.*, 876 F.3d 1350, 1360–61 (Fed. Cir. 2017) (quoting *In re Cyclobenzaprine Hydrochloride Extended-Release Capsule Patent Litig.*, 676 F.3d 1063, 1068–69 (Fed. Cir. 2012)).

A. Objective Indicia of Nonobviousness

Notwithstanding what the teachings of the prior art would have suggested to one skilled in the art, objective evidence of non-obviousness ("secondary considerations") may lead to a conclusion that the challenged claims would not have been obvious. *In re Piasecki*, 745 F.2d 1468, 1471–72 (Fed. Cir. 1984). Objective evidence of non-obviousness "may often be the most probative and cogent evidence in the record" and "may often establish that an invention appearing to have been obvious in light of the prior art was not." *Transocean Offshore Deepwater Drilling, Inc. v. Maersk Drilling USA, Inc.*, 699 F.3d 1340, 1349 (Fed. Cir. 2012) (citation omitted). For us to give substantial weight to objective evidence of nonobviousness, a proponent must establish a nexus between the evidence and the merits of the claimed invention. *ClassCo, Inc., v. Apple, Inc.*, 838 F.3d 1214, 1220 (Fed. Cir. 2016). Nexus is a legally and factually sufficient connection between the objective evidence and the claimed invention, such that the objective evidence should be considered in determining non-

obviousness. *Demaco Corp. v. F. Von Langsdorff Licensing Ltd.*, 851 F.2d 1387, 1392 (Fed. Cir. 1988).

Patent Owner offers evidence of industry praise and copying. PO Resp. 64–65. In particular, with respect to industry praise, Patent Owner points to an email "even before [the invention of the '223 patent] was reduced to practice" that recognized the system they were working on "as an 'amazing accomplishment' and 'one of the biggest' breakthrough developments in the rail industry over the past 30 years." *Id.* at 64 (citing Ex. 2030). With respect to the alleged copying, Patent Owner submits that "Petitioner's CTO, Brent Wilson, is a named inventor of the '223 patent and Petitioner, through Mr. Wilson had access to [Patent Owner]'s technology." *Id.* at 64–65. In addition, Patent Owner contends that Petitioner "advertises a 'proprietary algorithm built on 15 years of research,' which [Patent Owner] paid for . . . and touts the very features [Patent Owner] patented in the Challenged Claims." *Id.* at 65 (citing Exs. 2155, 2156); Sur-reply 26.

1. Industry Praise

Praise from industry participants, especially competitors, is probative as to obviousness because such participants "are not likely to praise an obvious advance over the known art. Thus, if there is evidence of industry praise of the claimed invention in the record, it weighs in favor of the non-obviousness of the claimed invention." *Apple Inc. v. Samsung Elecs. Co.*, 839 F.3d 1034, 1053 (Fed. Cir. 2016) (en banc).

In support of its contention of industry praise, Patent Owner points to Exhibit 2030, an email, dated April 8, 2010, from Bob Cantwell, who appears to be an employee of Patent Owner, to various employees of Patent

Owner and IONX, a business unit of Patent Owner (*see* Ex. 2017, 2 ("IONX is a business unit of Amsted Rail")). In the email, Mr. Cantwell states

> William, Brent, Jay,
>
> Congratulations on the successful SCT/IONX/Amsted Rail bearing monitoring installation!! The attached powerpoint speaks volumes as to the work that went into this development, and the results are already impressive! Having already identified a "bad actor" bearing is significant – can't wait to find out what Brenco discovers once they receive it for evaluation!!
>
> Looking at that long stretch of track without any wayside detection equipment highlights the opportunity for IONX around the world!
>
> I realize it's very early in the application of this monitoring system and there remain some bugs, but considering all the things that could have gone wrong, this is truly an amazing accomplishment! There have only been a handful of breakthrough developments in the Rail industry over the past 30 years, and this is going to be one of the biggest.
>
> Again, congratulations!
>
> Bob

Ex. 2030, 1.

We agree with Petitioner that Patent Owner has not linked this "industry praise" to any of the challenged claims. *See* Pet. Reply 24–25. As we explain below, many of the features of the challenged claims were already known in the prior art. *See infra* III.C, III.D, III.E, III.G, III.H. Moreover, even if Patent Owner had shown a nexus to the challenged claims, we do not find this internal email between employees of the Patent Owner to be "industry praise" entitled to significant weight in our analysis. We have no information about who Mr. Cantwell is or why we should give any weight to his opinion. Moreover, we have no evidence that would allow

us to determine whether this internal email by an employee of Patent Owner to other co-workers is genuine or simply self-serving praise. Accordingly, we give no weight to this email in our obviousness analysis.

2. Copying

"Copying may indeed be another form of flattering praise for inventive features." *Crocs, Inc. v. Int'l Trade Comm'n*, 598 F.3d 1294, 1311 (Fed. Cir. 2010). "[C]opying requires evidence of efforts to replicate a specific product." *Wyers v. Master Lock Co.*, 616 F.3d 1231, 1246 (Fed. Cir. 2010). "This may be demonstrated either through internal documents; direct evidence such as disassembling a patented prototype, photographing its features, and using the photograph as a blueprint to build a virtually identical replica; or access to, and substantial similarity to, the patented product (as opposed to the patent)." *Iron Grip Barbell Co. v. USA Sports, Inc.*, 392 F.3d 1317, 1325 (Fed. Cir. 2004) (internal citations omitted). "We note, however, that a showing of copying is only equivocal evidence of non-obviousness in the absence of more compelling objective indicia of other secondary considerations." *Ecolochem, Inc. v. S. Cal. Edison Co.*, 227 F.3d 1361, 1380 (Fed. Cir. 2000); *see also In re GPAC Inc.*, 57 F.3d 1573, 1580 (Fed. Cir. 1995) ("[M]ore than the mere fact of copying by an accused infringer is needed to make that action significant to a determination of the obviousness issue." (quoting *Cable Elec. Prods. v. Genmark, Inc.*, 770 F.2d 1015, 1028 (Fed. Cir. 1985))).

We agree with Petitioner that Patent Owner's evidence of copying is insufficient. Patent Owner provides no evidence of what claims it contends Petitioner's alleged copying is tied to, and no evidence that they even practice any of the challenged claims. *See* Pet. Reply 25. Moreover, the

mere fact that Mr. Wilson now works for Petitioner is insufficient to show copying because there is no evidence of when Petitioner developed its product relative to when Mr. Wilson joined Petitioner. Given Patent Owner's conclusory explanation and insufficient evidence, we give no weight to its allegations of copying.

B. Ground 1: Obviousness over LeFebvre

Petitioner asserts that LeFebvre would have rendered the subject matter of claims 2–10, 18, 20, 21, 23, and 25–32 obvious to one of ordinary skill in the art at the time of the invention. Pet. 18–41. Patent Owner opposes. PO Resp. 4–22.

1. Scope and Content of the Prior Art

a. LeFebvre (Ex. 1005)

LeFebvre is entitled "Railroad Train Monitoring System." Ex. 1005, Code (54). LeFebvre discloses "sensors for monitoring temperature pressure, shifting loads, truck hunting and the like and have circuitry for processing information received from the sensors and for processing and reporting departures of performance variables to a remote source." *Id.* at Code (57).

Figure 3, reproduced below, provides an illustration of an adapter pad having a plurality of sensors.

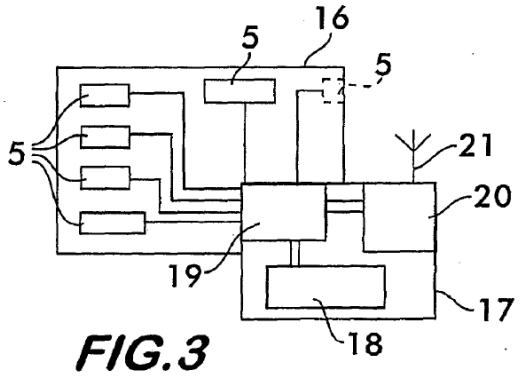

Id. at Fig. 3. Figure 3 depicts adapter pad 16 containing a plurality of sensors 5, which are embedded into its upper, side, and lower surfaces or into other locations such as its end surfaces. *Id.* ¶ 21. Figure 3 also depicts extended attachment portion 17, which is relatively isolated from the forces transmitted through adapter 16, and contains power source 18, analog/signal conditioning means and analog to digital conversion means and an associated microprocessor unit 19, as well as communications unit 20 which may be a low power radio transmitter/receiver having antenna 21. *Id.* The sensors are electrically connected to the analog to digital conversion circuit unit and the microprocessor unit which, in turn, is connected to and controls the communications unit so that messages can be sent and received. *Id.*

Figure 4, reproduced below illustrates an adapter pad in situ.

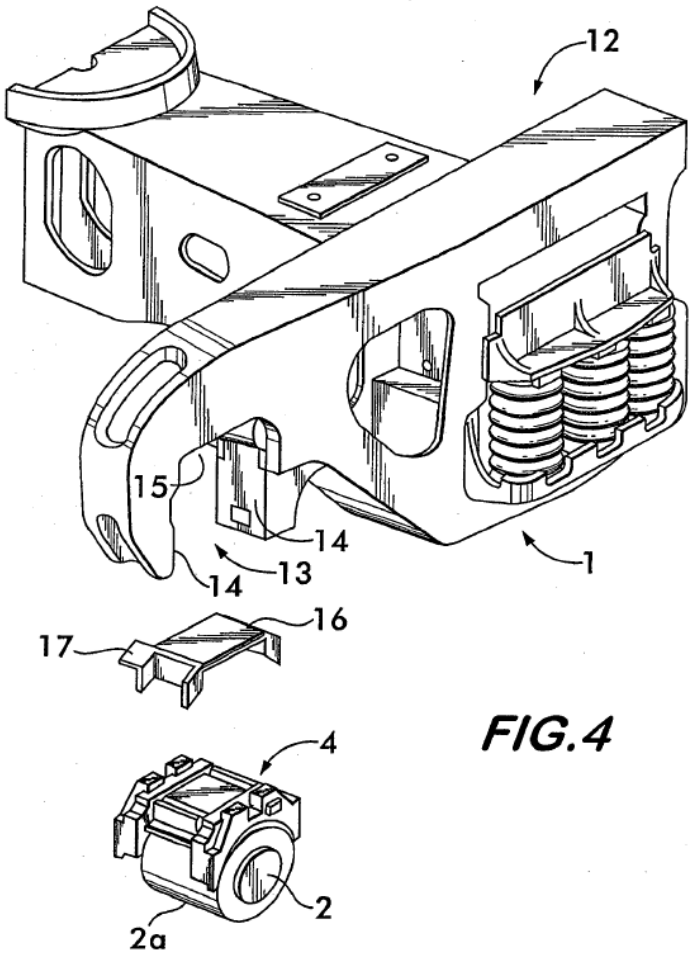

FIG. 4

Figure 4 is an exploded perspective view of portions of a railcar truck illustrating the position of an instrumented pad with respect to the railcar truck. *Id.* ¶ 15. As depicted in Figure 4, truck 1 having axle 2 with axle bearing 2a and bearing adapter 4, is configured so that each bearing transmits the load which it carries and heat that it may generate through pads 16 and to the truck. *Id.* ¶ 17. Bearing adapters 4 have a generally rectangular upper surface with depending legs extending from the corners of the top structure, and the legs have facing curved side surfaces which are configured so as to rest on the outer surface of bearing 2a mounted on the end of wheel bearing axle 2. *Id.* ¶ 19. Adapter pad 16 is generally

rectangular in plain view and has depending legs, and is formed to seat upon the upper surface of adapter 4. *Id.* Railroad freight car 22 having trucks 1 with pads 16 also includes data control unit 23 having a radio/receiver which has the ability to communicate with the radios on the pads 4 on its own railcar. *Id.* ¶ 24, Fig. 1.

LeFebvre explains that wireless communication is available and adaptable to allow instrumented pads 16 and data control units 23 to establish a network of connections without external intervention. *Id.* ¶ 32. These elements can be set up to recognize the relationship of truck and axle location on a railcar or set up so that the digital communication unit is informed of the configuration providing thereby a multi-hop means of linking the network together. *Id.* According to LeFebvre, a purpose of the invention is to be able to monitor the behavior of all the trucks and bearings and wheels on a train so that an alarm message can get through from any railcar to the locomotive or to the remote data handling service as quickly as possible. *Id.* ¶ 52. Because a large amount of data is monitored, "the system is designed to process the raw sensor data, looking for signs of trouble and then send only essential indicative information," using a distributed inference engine, which shares the essential functions between the microprocessors at instrumented pads 16 and at data control unit 23. *Id.* ¶ 53. Microprocessors 19 at instrumented pads 16 take a series of measurements and treat them as a time series. *Id.* ¶ 54. Then, search algorithms, forming an inference engine, can identify, for example, periodicities and cross correlations in and between time series so that any behavior detectable at pad level will be seen. *Id.* If a particular "behavior is inferred at the instrumented pad and the magnitude is sufficient to cause

alarm, relevant attributes and timing (relative to the time of transmission of report) can be passed to the car's data control unit." *Id.* ¶ 55. LeFebvre monitors, bearing temperature, bearing condition, wheel condition, brake fore and track defects, among others. *Id.* ¶¶ 57–66.

2. Differences Between the Prior Art and the Claims

Petitioner sets forth a detailed analysis showing how the teachings of LeFebvre meet the elements of claims 2–10, 18, 20, 21, 23, and 25–32. Pet. 21–52. In particular, regarding independent claims 2, 5, and 23, Petitioner relies on LeFebvre as teaching or suggesting all of the elements of these claims. *See id.*; *see also id.* at 33–37 (addressing elements 1[e] and 1[f]). Patent Owner challenges Petitioner's analysis of several limitations of the claims. PO Resp. 34–43. Patent Owner also contends objective indicia of nonobviousness support its position that the claimed invention would not have been obvious. *Id.* at 43–45. We address each argument below.

a. Claim 2

i. ***[2 Pre]*** *A system for monitoring a railcar, comprising:*

Petitioner contends that "[t]o the extent that the preamble is limiting, LeFebvre discloses a railcar monitoring system comprising a plurality of 'instrumented, flexible pads,' each of which 'contain sensors for monitoring temperature' and other parameters of the railcar." Pet. 19 (citing Ex. 1005, Code (57); Ex. 1003 ¶ 74). In particular, Petitioner notes that "LeFebvre discloses a system comprising an instrumented pad 16 that contains one or more sensors, such as temperature sensors." *Id.* (citing Ex. 1005 ¶¶ 21, 33, 58; Ex. 1003 ¶ 74). Patent Owner does not dispute that LeFebvre accounts for the preamble. We have reviewed Petitioner's citations and arguments,

and agree, on this record, we find that Petitioner has shown sufficiently that LeFebvre accounts for the preamble, if it is limiting.

ii. ***[2(a)]*** *a plurality of sensor devices located on the railcar for monitoring parameters or conditions of the railcar, each of said sensor devices being separate from one another and including a sensor for monitoring one of said parameters or conditions of the railcar;*

Petitioner notes that LeFebvre discloses a system comprising a plurality of instrumented pads 16, each of which comprises one or more sensors. Pet. 19 (citing Ex. 1005 ¶¶ 19, 23, 52; Ex. 1003 ¶ 76). Petitioner contends that "[e]ach instrumented pad 16 is a separate device that is mounted on the railcar . . . upon the upper surface of a wheel bearing adapter 4." *Id.* at 20 (citing Ex. 1005 ¶ 19; Ex. 1003 ¶ 77). Patent Owner does not dispute that LeFebvre accounts for this limitation. We have reviewed Petitioner's citations and arguments, and agree that Petitioner has shown sufficiently that LeFebvre accounts for this limitation.

iii. ***[2(b)]*** *said plurality of sensor devices including at least one temperature sensor device having:*

Petitioner asserts that "[t]he instrumented pad 16 may comprise one or more temperature sensors." Pet. 21 (citing Ex. 1005, Code (57), ¶¶ 21, 33, 58; Ex. 1003 ¶ 79). Patent Owner does not dispute that LeFebvre accounts for this limitation. We have reviewed Petitioner's citations and arguments, and find that Petitioner has shown sufficiently that LeFebvre accounts for this limitation.

iv. ***[2(c)]*** *a housing;*

Petitioner notes that "[t]he instrumented pad 16 'is preferably comprised of a cast or injected molded elastomeric polymer,' . . . and 'contains a plurality of sensors 5 which are preferably embedded into its upper, side, and lower surfaces or into other locations.'" Pet. 21 (citing (Ex. 1005 ¶¶ 19, 21). Thus, Petitioner concludes that "LeFebvre's instrumented pad therefore includes a housing." *Id.* (citing Ex. 1003 ¶ 81). Petitioner asserts that "[t]he housing is mounted on a railcar." *Id.* (citing Ex. 1005 ¶ 19, Fig. 4; Ex. 1003 ¶ 82). Petitioner argues that a person of ordinary skill in the art "would also have understood that the shape, size, or material of LeFebvre's housing could be changed (e.g., to accommodate mounting the sensor device in a different location on the railcar) without affecting the operation of the sensors or electronic circuitry contained within the housing." *Id.* at 22 (citing Ex. 1001, 15:18–24; Ex. 1003 ¶¶ 84–86).

Patent Owner argues that Petitioner has failed to account for the claimed "housing." PO Resp. 5–10. Patent Owner asserts that "[t]he term 'housing' refers to an enclosure that electronic components may be positioned within." *Id.* at 5. Patent Owner contends that the Petition "attempts to obfuscate the difference between the phrase 'embedded into' found in the LeFebvre reference and the phrase 'within said housing' as required by independent claim 2." *Id.* at 6. In particular, Patent Owner asserts that "LeFebvre merely discloses an instrumented pad 16 — which a [person of ordinary skill in the art] would understand to be different from the claimed 'housing.'" *Id.* Patent Owner contends that "the '223 patent expressly differentiates the meaning of the terms 'housing' and 'pad' by distinguishing over the earlier pad embodiments of the LeFebvre reference."

Id. at 7. Patent Owner submits that "[t]he insight of LeFebvre was to place sensors into adapter pads that were already in use on many railcars." *Id.* at 7–8 (citing Ex. 2010 ¶¶ 22, 29; Ex. 2008 ¶¶ 5–6, 10). Patent Owner asserts that "[c]onsistent with this history, the '223 patent explains '[i]n another alternate embodiment of the invention, one or more motes may be housed in alternative housings ***or built into the railcar itself***. In one such embodiment, motes can be ***built into the form of an adapter pad*** similar to the type shown in U.S. Pat. Nos. 7,698,962 and 7,688,218.'"[10] *Id.* at 8 (citing Ex. 1001, 15:18–24 (emphasis added); Ex. 2008 ¶¶ 5–6, 10). Patent Owner concludes that "the smart pads disclosed in LeFebvre is an example of the sensor device being 'built into the railcar itself' which is expressly distinguished from embodiments having housings." *Id.* (citing Ex. 1001, 15:18–24; Ex. 2008 ¶¶ 11–12).

As for Petitioner's assertion that a cast or injected polymer would be considered a housing, Patent Owner asserts that "coating something with a polymer does not constitute a 'housing,' which implies that the components are both protected and removable.'" *Id.* Instead, Patent Owner argues that LeFebvre "merely discloses a ***surface*** formed by a cast or injected molded elastomeric polymer." *Id.* at 8–9. Patent Owner also points to Van Auken,[11] which LeFebvre incorporates by reference, for additional details on the adapter pads. *Id.* Patent Owner submits that, based on Van Auken, a person of ordinary skill in the art would understand that the "pad" of LeFebvre is

---

[10] Patent Owner notes that U.S. Patent No. 7,688,218 (Ex. 1015) is the issued patent corresponding LeFebvre (Ex. 1005). *See* PO Resp. 8 n.1.

[11] U.S. Patent Publication 2005/0268813 A1, pub. Dec. 8, 2005 (Ex. 2006, "Van Auken").

demonstrably different from the universally mountable "housing" of the '223 patent because the pad must be placed in a specific orientation relative to the bearing adapter and serve a particular function. *Id.*

Based on our claim construction, we agree with Patent Owner that Petitioner has failed to show that LeFebvre accounts for the claimed housing. *See* PO Resp. 5–10. Petitioner's arguments to the contrary are not persuasive. As we explained above, the '223 patent draws a distinction between embodiments that use "housings" and embodiments where the sensors are "built into" the railcar. *See supra* II.A. We find that the adapter pad of LeFebvre falls into the "built into" category, not the housing category. *See* Ex. 1001, 15:18–24.

We also find that Petitioner has not shown sufficiently that modifying the housing of LeFebvre would have been obvious. *See* Pet. 22; Pet. Reply 6. Petitioner contends that a person of ordinary skill in the art "would also have understood that the shape, size, or material of LeFebvre's housing could be changed (e.g., to accommodate mounting the sensor device in a different location on the railcar) without affecting the operation of the sensors or electronic circuitry contained within the housing." Pet. 22 (citing Ex. 1001, 15:18–24; Ex. 1003 ¶¶ 84–86). On the complete record, we agree with Patent Owner that Petitioner has not shown a sufficient rationale to modify the adapter pad of LeFebvre. *See* PO Resp. 21–22. As Patent Owner persuasively explains, given the position and function of the adapter pad of LeFebvre, a person of ordinary skill in the art would understand it would have a significant vertical load bearing down on it. *See* PO Resp. 21 (citing Ex. 1005 ¶ 17; Ex. 2010 ¶ 52). In particular, we are persuaded by Patent Owner's explanation, supported by LeFebvre and Van Auken, that

the adapter pad serves a different function than a housing, and would be subject to significant loads and heat. *Id.*; Ex. 2010 ¶ 52; Ex. 1005 ¶ 17. Petitioner's contentions fail to address these significant demands on the adapter pad, and fail to explain why a person of ordinary skill in the art would have found it obvious to modify the adapter pad given its particular position and function to transmit loads and heat to instead be a housing that would isolate the sensors of pad 16 from such loads and heat. Thus, we find that Petitioner has failed to show by a preponderance of the evidence that LeFebvre accounts for the claimed "housing."

v. ***[2(d)]*** *a temperature sensor in thermal communication with an item of the railcar for which the temperature is being monitored, which item is external to said housing;*

Petitioner submits that "[t]he instrumented pad 16 may comprise one or more temperature sensors configured to monitor the temperature of a wheel bearing." Pet. 22 (citing Ex. 1005 ¶ 33; Ex. 1003 ¶ 87). Petitioner notes that "[a]s shown in Figure 4, wheel bearing 2a is external to the housing of instrumented pad 16." *Id.* at 23 (citing Ex. 1005 ¶ 19, Fig. 4; Ex. 1003 ¶ 87). Patent Owner does not dispute that LeFebvre accounts for this limitation. We have reviewed Petitioner's citations and arguments, and agree, on this record, we find that Petitioner has shown sufficiently that LeFebvre accounts for this limitation.

vi. ***[2(e)]*** *electrical circuitry in communication with said temperature sensor for obtaining information regarding the temperature*

being sensed, said electrical circuitry positioned within said housing;

Petitioner argues that "[t]he instrumented pad 16 comprises electrical circuitry, specifically: 'a power source 18, an analog/signal conditioning means and analog to digital conversion means and an associated microprocessor unit 19 and a communications unit 20.'" Pet. 23 (citing Ex. 1005 ¶ 21; Ex. 1003 ¶ 89). Petitioner contends that "[t]his electrical circuitry is located within the housing, preferably within extended attachment portion 17, and is in communication with the temperature sensor." *Id.* at 23–24 (citing Ex. 1005 ¶ 21; Ex. 1003 ¶¶ 90–91). Petitioner asserts that "[t]he sensors are electrically connected to the analog to digital conversion circuit unit and the microprocessor unit' (i.e., electrical circuitry)." *Id.* at 24 (citing Ex. 1005 ¶ 21).

Patent Owner argues that Petitioner fails to show that LeFebvre accounts for the claimed "electrical circuitry positioned within said housing," as required by independent claim 2. PO Resp. 11–13. Patent Owner asserts that Petitioner is incorrect that pad 16 contains the electrical circuitry components. *Id.* at 11. Instead, Patent Owner submits that "LeFebvre discloses that ***extended portion 17*** — not the pad 16 — contains these components." *Id.*

We find that Petitioner has shown that LeFebvre accounts for "electrical circuitry in communication with said temperature sensor for obtaining information regarding the temperature being sensed." However, as discussed above, we find that Petitioner has failed to show that LeFebvre accounts for the claimed housing. Thus, we find Petitioner has not shown that LeFebvre discloses that such circuitry is "positioned within said housing" as required by claim 2.

vii. ***[2(f)]*** *a power source electrically connected to said electrical circuitry for providing power thereto, said power source positioned within said housing;*

Petitioner argues that "[t]he instrumented pad 16 comprises a power source 18, which is electrically connected to the electrical circuitry 19, as shown in Figure 3." Pet. 24 (citing Ex. 1005 ¶¶ 21, 23, Fig. 3; Ex. 1003 ¶ 93). Petitioner submits that "power source 18 may be contained within extended portion 17, as shown in Figure 3." *Id.* (citing Ex. 1005 ¶ 19, Fig. 3; Ex. 1003 ¶ 93). Patent Owner raises no arguments regarding this limitation, other than the "within said housing" arguments considered above. Although we find that Petitioner has shown that LeFebvre discloses "a power source electrically connected to said electrical circuitry for providing power thereto," it has not shown that such power source is "positioned within said housing," for the reasons explained above.

viii. ***[2(g)]*** *a communication device capable of broadcasting information regarding the temperature sensed via wireless communication, said communication device positioned within said housing; and*

Petitioner argues that "[t]he instrumented pad 16 comprises a communications unit 20." Pet. 24 (citing Ex. 1005 ¶¶ 21, 23). Petitioner contends that LeFebvre discloses that "[t]he communications unit is preferably a radio transmitter/receiver, which is capable of wirelessly broadcasting information received from one or more sensors." *Id.* (citing Ex. 1005 ¶¶ 21, 23, 31, 32, 43–46; Ex. 1003 ¶ 95). Petitioner argues that "communications unit 20 may be contained within extended portion 17, as shown in Figure 3." *Id.* at 25 (citing Ex. 1005 ¶ 21, Fig. 3; Ex. 1003 ¶ 96).

Patent Owner raises no arguments regarding this limitation, other than the "within said housing" arguments considered above. Although we find that Petitioner has shown that LeFebvre discloses "a communication device capable of broadcasting information regarding the temperature sensed via wireless communication," it has not shown that such "communication device" is "positioned within said housing," for the reasons explained above.

ix. ***[2(h)]*** *a communication management unit, mounted on the railcar, capable of two way wireless communication with each of said plurality of sensor devices for receiving information therefrom, said communication management unit having a wireless communication device for broadcasting information about the parameter or condition being monitored.*

Petitioner notes that "[i]n LeFebvre's system, each of the instrumented pads 16 communicates wirelessly with a data control unit 23, which is mounted on the railcar body." Pet. 25 (citing Ex. 1005 ¶ 24; Ex. 1003 ¶ 98). Petitioner submits that data control unit 23 is linked via cable to a communications device 24, and "[t]he data control unit 23 passes messages on to the communications device 24 for onward transmission to the locomotive or to other remote receivers." *Id.* (citing Ex. 1005 ¶¶ 24, 38; Ex. 1003 ¶ 99) (alternation in original). Petitioner asserts that "[f]or communication with the locomotive, the communications device may use a variety of wired or wireless transmission methods, including, for example, WiFi." *Id.* (citing Ex. 1005 ¶ 43). Petitioner notes that "[f]or communication with remote sources, the communications device may comprise, for example, 'a cellular or satellite radio system.'" *Id.* (citing Ex. 1005 ¶ 25). Patent Owner does not dispute that LeFebvre accounts for this

limitation. We have reviewed Petitioner's citations and arguments, and find that Petitioner has shown sufficiently that LeFebvre accounts for this limitation.

x. Summary

In sum, we determine that Petitioner has not shown sufficiently that LeFebvre teaches or suggests all the limitations of claim 2. In particular, we find that Petitioner has not shown by a preponderance of the evidence that LeFebvre discloses or renders obvious the claimed "housing," or the requirement that certain components be "positioned within said housing."

b. Claim 5

Claim 5 shares many similar limitations with claim 2, and for those limitations Petitioner relies on its evidence and arguments detailed with respect to claim 2. Petitioner maps together the following limitations of claims 2 and 5: [5 Pre] and [2 Pre], [5(a)] to [[2(a)], [5(b)] to [2(b)], [5(c)] to [2(f)], [5(f)] to [2(g)], [5(h)] to [2(h)]. We have reviewed those contentions and for the reasons discussed above with respect to claim 2, we find that Petitioner has shown sufficiently that LeFebvre accounts for those limitations. We now turn to the limitations that Petitioner maps separately.

i. ***[5(d)]*** *"a processor,"*

Petitioner contends that, in LeFebvre, "[t]he instrumented pad 16 comprises a microprocessor unit 19." Pet. 30 (citing Ex. 1005 ¶¶ 21, 39; Ex. 1003 ¶ 120). Patent Owner does not dispute that LeFebvre accounts for this limitation. We have reviewed Petitioner's citations and arguments, and find that Petitioner has shown sufficiently that LeFebvre accounts for this limitation.

ii. ***[5(e)]*** *"memory,"*

"LeFebvre discloses that each instrumented pad contains non-volatile memory, which is used to store certain identifying information." Pet. 30 (citing Ex. 1005 ¶ 70; Ex. 1003 ¶ 122). Patent Owner does not dispute that LeFebvre accounts for this limitation. We have reviewed Petitioner's citations and arguments, and find that Petitioner has shown sufficiently that LeFebvre accounts for this limitation.

iii. ***[5(g)]*** *"and software, stored in said memory and executed by said processor, said software performing the functions of collecting data from said sensor at periodic intervals,"*

Petitioner contends that "LeFebvre also discloses that each instrumented pad performs various computational functions, such as collecting data from sensors, analyzing it to determine whether an alarm condition exists, and transmitting messages upstream to the data control unit." Pet. 33 (citing Ex. 1003 ¶ 143). Petitioner submits that "each instrumented pad comprises software that is executed by the microprocessor to carry out these functions." *Id.* (citing Ex. 1003 ¶ 143; Ex. 1005 ¶¶ 34–35, claim 22). Petitioner asserts that "[t]his software would be stored in memory accessible by the microprocessor on the instrumented pad. *Id.* (citing Ex. 1003 ¶ 143).

Patent Owner argues that LeFebvre's sensor, which is programmed to switch on briefly, but would normally be in a low-powered state, "is not '***collecting data*** . . . at periodic intervals' as recited in limitations 5(g) and 8(b)." PO Resp. 18 (alteration in original). Patent Owner contends that the claims of the '223 patent expressly distinguish between the power-saving

functionality and the periodic collection of data. *Id.* at 18–19(citing Ex. 1001, 5:24–29, 13:51–53).

We disagree with Patent Owner that "collecting data . . . at periodic intervals" excludes power management techniques like those described in LeFebvre. Claim 1 of the '223 patent is instructive. Claim 1 recites, "wherein the power consumption of said sensor device is managed by placing said sensor device in a standby state and *periodically awakening said sensor device to collect readings* from said temperature sensor and to transmit the information regarding the temperature sensed via said communication circuitry." Ex. 1001, 15:50–55. Thus, like claim 5, claim 1 also recites, "periodically . . . collect[ing] readings." *Id.* But claim 1 also recites requirements about how the sensor behaves, e.g., placing the device in a standby state and periodically awakening. When read together, we do not agree that claims 1 and 5 cover two entirely different situations. Rather, we understand claim 1 as a subset of "collecting data . . . at periodic intervals," and claim 5 reciting a broader limitation encompassing collection of data regardless of the power management technique used.[12] *See* Ex. 2010 ¶ 48 (noting "the same system could infringe both claims 1 and 5). In sum, we find that Petitioner has sufficiently shown that LeFebvre, by teaching that "the microprocessor on an instrumented pad 16 is normally in a passive, low power state, but is programmed to switch on briefly, periodically. It

[12] We also note that the only reference to periodic data collection in the Specification that we have been able to locate (Patent Owner does not identify any in its arguments) relate to the power saving. *See* Ex. 1001, 5:24–29. Thus, Patent Owner's implied construction of this term would appear to exclude the only embodiment of periodic data collection in the Specification.

gathers readings from each of the sensors and performs preliminary analysis of the readings," (Ex. 1005 ¶ 34) accounts for this limitation. *See* Ex. 1003 ¶¶ 145–146; Ex. 1033 ¶ 12.

iv. ***[5(i)]*** *"wherein said communication management unit applies heuristics to analyze data collected from said one or more sensor units,"* ***[5(j)]*** *"(a) to determine if an actual failure exists and"* ***[5(k)]*** *"(b) to predict potential or imminent failures based on a statistical analysis of said collected data."*

Petitioner submits that "[i]n LeFebvre's system, the data control unit acts as an 'aggregator of information,' collecting data from each of the instrumented pads on the railcar." Pet. 27 (citing Ex. 1005 ¶¶ 36, 56, 95; Ex. 1003 ¶ 108). Petitioner contends that "[t]he data control unit then uses 'inference engine techniques' (i.e., heuristics) to analyze the collected data." *Id.* at 28 (citing Ex. 1005 ¶¶ 36, 56, 95; Ex. 1003 ¶ 109).

LeFebvre discloses that:

> As an aggregator of information, it is programmed to compare information from all of the trucks on the railcar and draws inferences from them as to the status of the car, for example, the data control unit uses inference engine techniques to identify unsatisfactory behavior such as swaying, bouncing or even partial derailment.

Ex. 1005 ¶ 36. LeFebvre also states that "[g]iven that more than one instrumented pad may report misbehavior, then the components of the inference engine in the data control unit take responsibility for making assessments for the whole truck and ultimately for the freight car." *Id.* ¶ 56. LeFebvre also discloses that "[w]hen serious trouble is inferred, then messages are sent via the communications link 23a, 24 to the locomotive,

etc." *Id.*; *see also id.* ¶ 95. Petitioner argues that "[t]he 'inference engine' techniques used by the data control unit include, for example, statistical analysis of the collected data." Pet. 28 (Ex. 1005 ¶¶ 58–66; Ex. 1003 ¶ 110). Petitioner notes, as an example, that "the data control unit may detect a wheel derailment condition by looking for a high frequency, periodically repeating load and 'a similar signal from both wheels in the wheel set.'" *Id.* (citing Ex. 1005 ¶¶ 60–61). Petitioner also notes that "the data control unit may detect track defects by '[m]onitoring the vertical loads in the instrumented pads and comparing these between wheel sets.'" *Id.* (citing Ex. 1005 ¶ 66). Petitioner contends that "[t]he data control unit is ultimately responsible for determining the presence of an alarm condition that relates to the railcar as a whole." *Id.* at 29 (citing Ex. 1005 ¶ 95; Ex. 1003 ¶ 111). Petitioner asserts that "[i]f an alarm condition is present, the data control unit is responsible for sending an alarm message upstream (i.e., to the locomotive and/or a remote data handling location)." *Id.* at 29 (citing Ex. 1005 ¶ 95; Ex. 1003 ¶ 111).

Petitioner asserts that "LeFebvre discloses the use of heuristics, based upon data collected from one or more sensor units, to determine the existence of actual failure conditions." *Id.* at 31 (citing Ex. 1005 ¶¶ 58–66; Ex. 1003 ¶ 128). Petitioner contends that "heuristics may be used to identify the existence of wheel damage such as 'a flat spot or shelled wheel tread,' or a wheel derailment." *Id.* (citing Ex. 1005 ¶¶ 60, 61).

Petitioner contends that "LeFebvre discloses the use of heuristics, based upon data collected from one or more sensor units, to predict potential or imminent failures based upon a statistical analysis of the collected data." Pet. 31 (citing Ex. 1005 ¶¶ 58–66; Ex. 1003 ¶ 130). Petitioner argues that

"LeFebvre discloses that heuristics may be used to identify 'long term trends' in wheel bearing temperature, avoiding a potential bearing burn off and possible derailment.'" *Id.* at 31–32 (citing Ex. 1005 ¶ 58). LeFebvre additionally discloses that "[s]pecific bearing defects can be inferred from frequency spectrum analysis." Ex. 1005 ¶ 59. LeFebvre teaches that "[i]dentifying a failing bearing in its early stages is important in preventative maintenance programs." *Id.* Petitioner asserts that "[t]hese and similar heuristics are commonly used in the industry and would have been familiar to a [person of ordinary skill in the art]." Pet. 32 (citing Ex. 1003 ¶¶ 132–133).

Patent Owner argues that Petitioner fails to account for these limitations. PO Resp. 14–18. Patent Owner asserts that "[i]n order to provide for this forward-looking, predictive analysis that is 'based on a statistical analysis,' a statistical model with sufficient data, i.e., previously acquired data, on which to base such predictions would be needed." *Id.* at 14. Patent Owner notes that

> The '223 patent explains: "'The CMU is capable of wirelessly collecting data from each of the motes and performing higher-level analysis of the data to detect imminent or actual failures. During such data analysis, heuristics may be applied to determine potential failures ***based on statistical models*** and empirical data.'"

Id. (quoting Ex. 1001, 2:57–62 (emphasis added)). Thus, Patent Owner argues that the claimed statistical analysis "necessarily involves a higher-level analysis than just the mere aggregation of collected sensor data to form an inference as to the condition of the train." *Id.* at 14–15 (citing Ex. 2010 ¶¶ 37–40, 43–44). Patent Owner also argues that Petitioner cannot rely on

the same disclosure for both the claimed "heuristics" and "statistical analysis" because they are separate. *Id.*

We disagree with Patent Owner that claim 5 requires the use "statistical models." The claim recites using "statistical analysis," not "statistical models." PO Resp. 14. As for Patent Owner's contentions that "heuristics" and "statistical analysis" are distinct and Petitioner relies on the same disclosure for both, we disagree that Petitioner relies on the same disclosure for both limitations. *See* PO Resp. 15. For example, in the Petition, Petitioner points to LeFebvre's disclosure of "identify[ing] the existence of wheel damage such as 'a flat spot or shelled wheel tread,'" . . . or "a wheel derailment," as example of "heuristics . . . to determine if an actual failure exists." Pet. 31 (citing Ex. 1005 ¶¶ 60, 61). In particular, LeFebvre discloses for "Wheel derailment" that "[i]dentifying when a wheel set *has derailed* prevents a possible full derailment and possible catastrophic consequences." Ex. 1005 ¶ 61 (emphasis added). While for "heuristics . . . to predict potential or imminent failures based upon a statistical analysis," Petitioner points to LeFebvre's disclosure regarding wheel bearing temperature and vibration. *See id.* at 31–32 (citing Ex. 1005 ¶¶ 58, 59). In particular, LeFebvre's discussion of "Bearing temperature" explains that the "well-being of a roller bearing can be inferred using either trends or alarm levels, avoiding a potential bearing burn off and possible derailment and providing a direct measurement that can be used to avoid false alarms from wayside hotbox detectors." Pet. 31 (citing Ex. 1005 ¶ 58). Thus, Petitioner has identified distinct disclosure for each of the limitations of claim 5.

As for Patent Owner's contention that LeFebvre does not disclose the use of "statistical analysis," PO Resp. 16–17, we disagree. LeFebvre teaches

analyzing the data for "long term trends" to predict whether a particular component may be about to fail. Ex. 1005 ¶ 58. We agree with Petitioner that determining trends in the data at least suggests the use of statistical techniques. *See* Pet. 31–32; *see also* Ex. 1003 ¶¶ 130–132. As Mr. Ricca cogently explains, "statistical analysis" is a broad term encompassing a number of mathematical techniques, and determining a "trend" requires statistical analysis. *See* Ex. 1033 ¶ 9. Thus, we find that Petitioner has shown that LeFebvre accounts for this limitation.

v. Summary

In sum, we determine that Petitioner has shown by a preponderance of the evidence that LeFebvre teaches or suggests all the limitations of claim 5.

c. Claim 23

i. Petitioner's Contentions

Claim 23 relates to a "monitoring device for monitoring temperature on a railcar," and recites a number of limitations that are nearly identical to limitations 2(c)–2(g) of claim 2. Petitioner relies on its allegations for claim 2 for those limitations. *See* Pet. 38. Claim 23 also recites "wherein the power consumption of said monitoring device is managed by placing said monitoring device in a standby state and periodically awakening said monitoring device to collect readings from said temperature sensor and to transmit the information regarding the temperature sensed via said communication circuitry." Ex. 1001, 18:25–30. For this limitation, Petitioner submits that "LeFebvre manages the power consumption of the instrumented pad by periodically placing the device into a low-power, or 'standby,' state." Pet. 34 (citing Ex. 1005 ¶¶ 34–35; Ex. 1003 ¶ 145)). Petitioner notes that LeFebvre teaches that "[i]n operation, the

microprocessor on an instrumented pad 16 is normally in a passive, low power state, but is programmed to switch on briefly, periodically." *Id.* (citing Ex. 1005 ¶ 34). Petitioner also contends that "[t]he microprocessor awakens at periodic intervals to process sensor data and, if appropriate, initiate a radio transmission." *Id.* (citing Ex. 1005 ¶ 34, Claim 22; Ex. 1003 ¶ 146).

ii. Patent Owner's Arguments

Patent Owner reiterates its arguments with respect to claim 2 regarding the claimed "housing" and "positioned within said housing." PO Resp. 20. Patent Owner additionally argues that LeFebvre does not teach or suggest a housing "mountable on a railcar" as required by claim 23. *Id.*

iii. Analysis

For the reasons discussed above with respect to claim 2, we find that LeFebvre does not account for the claimed "housing." Accordingly, we find that Petitioner has not shown by a preponderance of the evidence that LeFebvre accounts for all of the limitations of claim 23.

d. Claims 3, 4, 6–10, 18, 20, 21, and 25–32

Claims 3, 4, and 26–30 depend, directly or indirectly, from claim 2. Claim 25 depends from claim 23. We have found above that Petitioner has failed to show that LeFebvre accounts for all the limitations of claims 2 and 23. Thus, we find that Petitioner has also failed to account for all the limitations of claims 3, 4, and 25–30, which depend from either claim 2 or claim 23 as set forth above.

Claims 6–10, 18, 20, 21, 23, 31, and 32 depend, directly or indirectly, from claim 5. Petitioner sets forth a detailed analysis showing how the combined teachings of the references meet the elements of claims 6–10, 18,

20, 21, 31, and 32. Pet. 32–38, 41. Patent Owner does not raise additional argument challenging Petitioner's analysis and evidence directed to these claims, in its Patent Owner Response, aside from the arguments raised regarding claim 5 considered above. *See generally* PO Resp. We find Petitioner's arguments persuasive as to claims 6–10, 18, 20, 21, 31, and 32 and supported on the complete record before us, and, therefore, we adopt them as our own findings. Accordingly, for the reasons explained by Petitioner, we find that LeFebvre satisfies the subject matter of claims 6–10, 18, 20, 21, 31, and 32, but has *not* shown that LeFebvre satisfies the subject matter of claims 3, 4, and 25–30.

3. Objective Indicia of Nonobviousness

As we found above, Patent Owner's evidence of objective indicia of nonobviousness is entitled to no weight in our analysis.

4. Collective Considerations of the Graham Factors

"Once all relevant facts are found, the ultimate legal determination [of obviousness or nonobviousness] involves the weighing of the fact findings to conclude whether the claimed combination would have been obvious to an ordinary artisan." *Arctic Cat*, 876 F.3d at 1361. Based upon consideration of the entire record, and for the reasons discussed above, we determine Petitioner has shown by a preponderance of the evidence that LeFebvre teaches each limitation of claims 5–10, 18, 20, 21, 31, and 32 of the '223 patent, that a person of ordinary skill in the art would have had reasons with rational underpinning to modify LeFebvre in the manner suggested and would have had a reasonable expectation of success in so doing, and that Petitioner's evidence of unpatentability significantly

outweighs the extremely marginal evidence of industry praise and copying provided by Patent Owner.

On the whole and considering the *Graham* factors collectively, Petitioner has shown by a preponderance of the evidence that LeFebvre would have rendered the subject matter of claims 5–10, 18, 20, 21, 31, and 32 of the '223 patent obvious to one of ordinary skill in the art at the time of the invention. Petitioner has failed to show, by a preponderance of the evidence, that claims 2–4, 23, and 25–30 are unpatentable as obvious over LeFebvre.

A. Ground 2: Obviousness over LeFebvre and Barone

Petitioner contends that the combination of LeFebvre and Barone would have rendered the subject matter of claims 13–17, 22, and 24 obvious to one of ordinary skill in the art at the time of the invention. Pet. 41–51. Patent Owner opposes. PO Resp. 62–65.

1. Scope and Content of the Prior Art

a. Barone (Ex. 1007)

Barone is entitled "Self-Assembling Wireless Network, Vehicle Communications System, Railroad Wheel and Bearing Monitoring System and Methods Therefor." Ex. 1007, Code (54). Barone relates to "the field of wirelessly networking vehicles, especially where the vehicles are railroad cars, and where the communications are part of a system for monitoring the degree of wear on the wheel bearings of railroad cars." *Id.* ¶ 2.

Figure 1 of Barone is reproduced below.

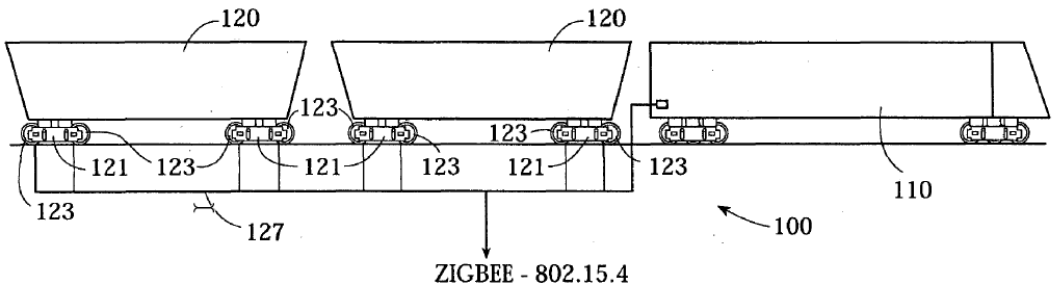

FIG. 1

Figure 1 is a schematic diagram illustrating a railroad train equipped with an exemplary network system. Network system 100 is an Autonomous Rolling Stock Monitoring System (ARMS) system used on railroad trains, where the train includes locomotive 110 and a plurality of serially connected railroad cars 120 each supported on two trucks 121 having wheels 123. *Id.* ¶ 85. The ARMS includes onboard monitoring devices that wirelessly communicate status and data to existing remote database and monitoring infrastructure. *Id.* ¶ 86. The communication system architecture includes for each wheel 123 a self-contained monitoring and diagnostic ARMS device 125 containing an IEEE 802.15.4 Zigbee wireless communication radio. *Id.* ¶ 86; Fig. 4A. Each wheel-mounted device or node 125, when powered, will autonomously form a network, and wirelessly transmit status and diagnostic data as required to locomotive 110, either by direct wireless communication with a Zigbee radio-equipped computer system supported on and powered by locomotive 110, or by a leap-frog or mesh network using other nodes 125 by Zigbee communications to act as intermediaries to receive and forward communications for the locomotive system. *Id.*

Data points that are acquired are subjected to a focused discrete Fourier transform to identify the presence of cup, cone, and/or roller defect

frequencies. *Id.* ¶ 201. Barone explains that the continuous monitoring of the frequencies allows for a trending analysis at the node, which provides high reliability of the bearing monitoring. *Id.* ¶ 237. A "microprocessor stores at least partial data representative of historical peak levels in dB or other units, and changes therein that exceed a pre-selected threshold trigger special processing and alarm data generation and transmission to the locomotive system." *Id.* In one embodiment, temperature sensor 175 connects with a comparator circuit with an adaptive trip point 181 that triggers an interrupt when the temperature detected exceeds a certain preselected threshold value, and the interrupt generated by the comparator 181 is processed as a failure alarm. *Id.* ¶ 240.

2. Differences Between the Prior Art and the Claimed Invention

a. Petitioner's Contentions

Petitioner provides a mapping of claims 13–17, 22, and 24 to the disclosures of LeFebvre and Barone and explains why a person of ordinary skill would have combined the references with a reasonable expectation of success. Pet. 41–51.

b. Patent Owner's Arguments

For claims 13–17 and 22, Patent Owner relies on the arguments raised above for claim 5 with respect to Ground 1. PO Resp. 22–23. For claim 24, Patent Owner relies on the arguments raised above for claim 23 with respect to Ground 1. *Id.* at 23.

c. Analysis

We considered Patent Owner's arguments regarding claims 5 above, and found them unpersuasive. *See supra* III.C.2.b. However, with respect

to claim 23, we found Patent Owner's arguments regarding the claimed "housing" persuasive. *See supra* III.C.2.c.

d. Conclusion

Thus, we find that Petitioner has shown that the combination of LeFebvre and Barone accounts for all the limitations of claims 13–17 and 22 and that a person of ordinary skill in the art would have been motivated to combine the teachings of those references in the manner suggested. We further find that Petitioner has not accounted for all of the limitations of claim 24.

3. Objective Indicia of Nonobviousness

As we found above, Patent Owner's evidence of objective indicia of nonobviousness is entitled to no weight in our analysis.

4. Conclusion as to Obviousness

Accordingly, for the reasons explained above, we find that Petitioner has shown by a preponderance of the evidence that claims 13–17 and 22 would have been obvious over the combination of LeFebvre and Barone. Petitioner has failed to show by a preponderance of the evidence that claim 24 would have been obvious over the combination of LeFebvre and Barone.

B. Ground 3: Obviousness over LeFebvre, Denny, and Provasnik

Petitioner contends that the combination of LeFebvre, Denny, and Provasnik would have rendered the subject matter of claims 1 and 24 obvious to one of ordinary skill in the art at the time of the invention. Pet. 52–55. Patent Owner opposes. PO Resp. 62–65.

1. Scope and Content of the Prior Art

a. Denny (Ex. 1008)

Denny is entitled "Wheelset Monitoring System." Ex. 1008, Code (54). Denny relates "to [a] thermal warning device in a wheel assembly of a railway car to indicate when the temperature of the wheel assembly has reached a level indicative of potential bearing failure." *Id.* at 1:9–12.

An exemplary thermal warning device is depicted in Figure 4 of Denny, reproduced below.

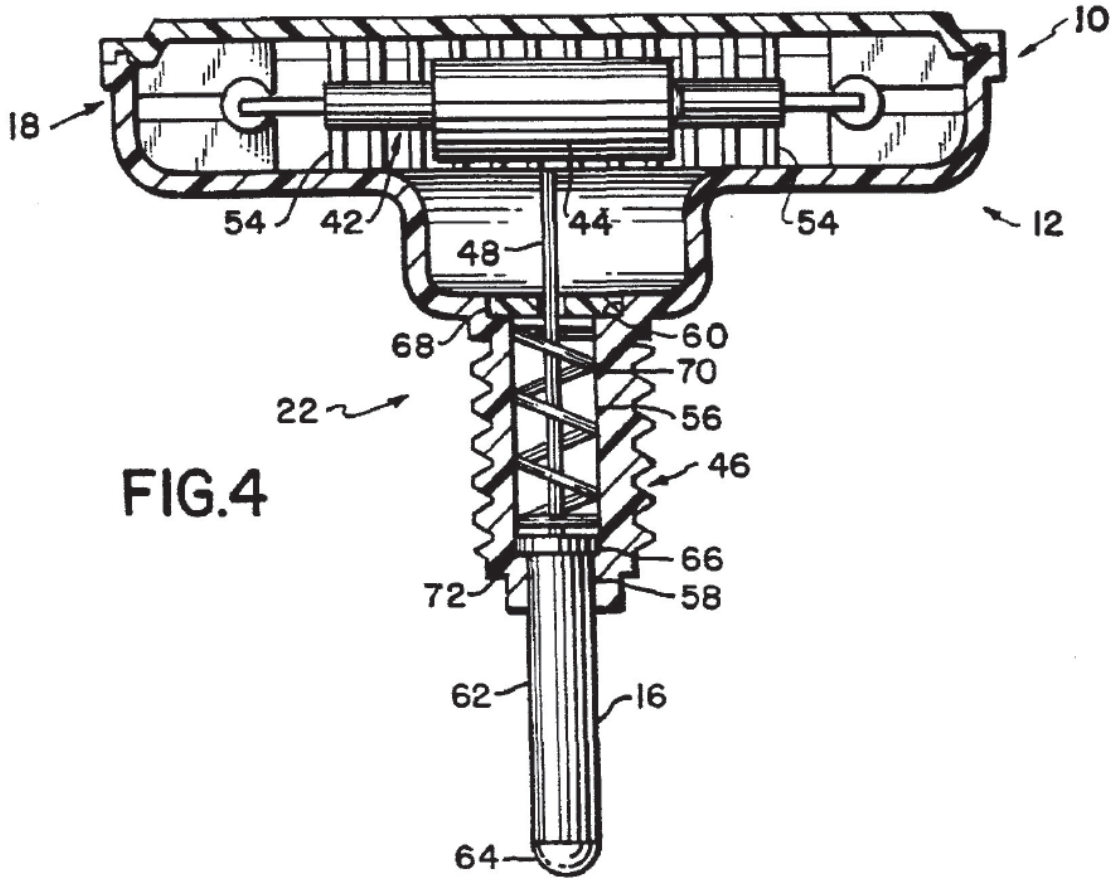

Figure 4 is a sectional view of thermal warning device 10. *Id.* at 4:23–24. Thermal warning device 10 is designed to monitor the conditions of bearing assemblies of railway car wheels. *Id.* at 4:39–41. "[T]hermal warning device 10 is a one piece, modular unit comprising a housing 12

having a threaded lower portion 14 and a temperature sensor 16 extending from the lower portion." *Id.* at 4:49–53. The inner compartment of the housing 12, at the upper most position, supports electronic circuit 42 including circuit board 50, power supply 44 and probe assembly 46. *Id.* at 5:35–37. Denny explains that using this arrangement, the temperature sensor adjustably extends into the wheel assembly in order to obtain accurate readings of high temperatures in wheel assembly, but the electronic circuit is situated away from the outer surface of the wheel assembly so that the electronic circuit will not be subjected to heat from the wheel assembly and may freely dissipate beat produced by its own components. *Id.* at Code (57).

b. Provasnik (Ex. 1009)

Provasnik is entitled "Temperature Sensor for Measuring the Temperature of an Engine." Ex. 1009, Code (54). Provasnik relates "to a temperature sensor which is not installed permanently but which can readily be attached to and removed from the engine." *Id.* at 1:10–13. Figure 1 of Provasnik is reproduced below.

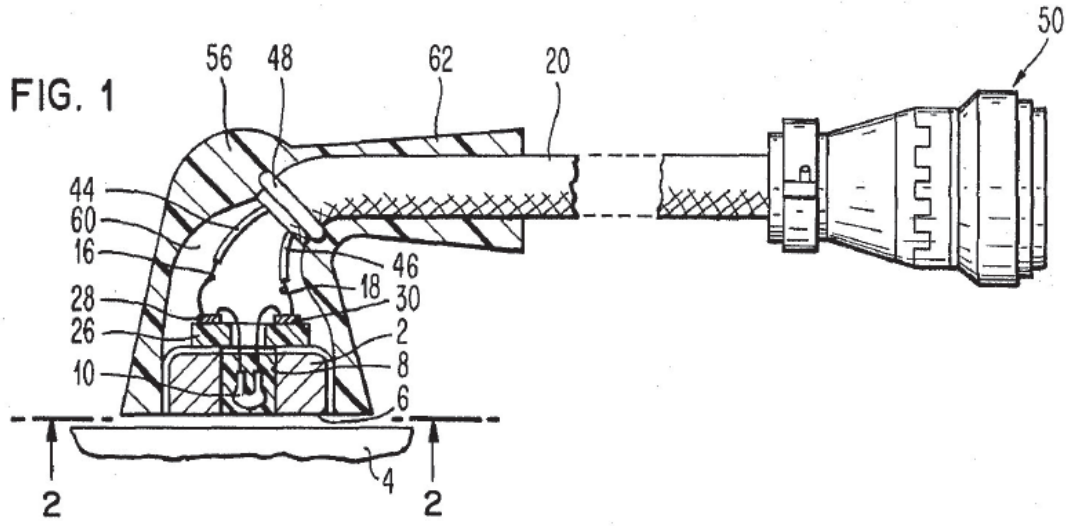

Figure 1 "is a general view of a temperature sensor, partially in cross-section, for measuring the temperature of an automobile engine." *Id.* at 2:34–36. Temperature sensor 10 is mounted within a magnet 2 for magnetic attachment to any part 4 of an engine where a temperature reading is desirable. *Id.* at 2:54–56. Provasnik explains that the sensor's advantage is "that there is no necessity that it be inserted into the oil itself when a reading is taken." *Id.* at 2:51–53.

2. Differences Between the Prior Art and the Claimed Invention

a. Petitioner's Contentions

Claim 1 is similar to claim 2, and Petitioner relies on its mapping of how LeFebvre accounts for the limitations of claim 2 for the overlapping limitations, in particular the claimed "housing." *See* Pet. 53–55 (cross referencing claim 2 analysis).

Claim 24 depends from claim 23 and is similar in scope to claim 1, except most significantly that it does not require that the probe "magnetically attract the part of the railcar." Ex. 1001, 18:9–35. Petitioner relies on a similar mapping to the prior art as claim 1. *See* Pet. 55.

b. Patent Owner's Arguments

Patent Owner repeats its arguments that arguments LeFebvre does not disclose a "housing," or (i) "electrical circuity," (ii) a "power source," and (iii) a "communication device" that are "positioned within said housing." PO Resp. 24. Patent Owner also argues that Provasnik does not relate to trains.

c. Analysis

We agreed with Patent Owner's argument that LeFebvre does not disclose a "housing," and that Petitioner has failed to show that LeFebvre renders the claimed "housing" obvious. *See supra* III.C.2.

d. Conclusion

Thus, we find that Petitioner has not shown that the combination of LeFebvre, Denny, and Provasnik accounts for all the limitations of claims 1 and 24.

3. Objective Indicia of Nonobviousness

As we found above, Patent Owner's evidence of objective indicia of nonobviousness is entitled to no weight in our analysis.

4. Conclusion as to Obviousness

Accordingly, for the reasons explained above, we find that Petitioner has not shown by a preponderance of the evidence that claims 1 and 24 would have been obvious over the combination of LeFebvre, Denny, and Provasnik.

C. Ground 4: Obviousness over Armitage

Petitioner asserts that claims 2, 3, and 26–28 would be obvious over Armitage. Pet. 56–68. Patent Owner opposes. PO Resp. 24–53.

1. Armitage (Ex. 1006)

Armitage is entitled "Dynamic Monitoring of Mobile Railway Car Undercarriage." Ex. 1006, Code (54). Armitage discloses a plurality of sensor nodes are "configured to monitor the undercarriage portion of the railway car when in motion and transmit information about the undercarriage portion to [a] control node," which "receive[s] the information

about the undercarriage portion, process[es] the information to determine a fault condition for the undercarriage portion, and wirelessly report[s] the fault condition to a collection system." *Id.* ¶ 4.

Figure 1, reproduced below depicts an exemplary railway car system.

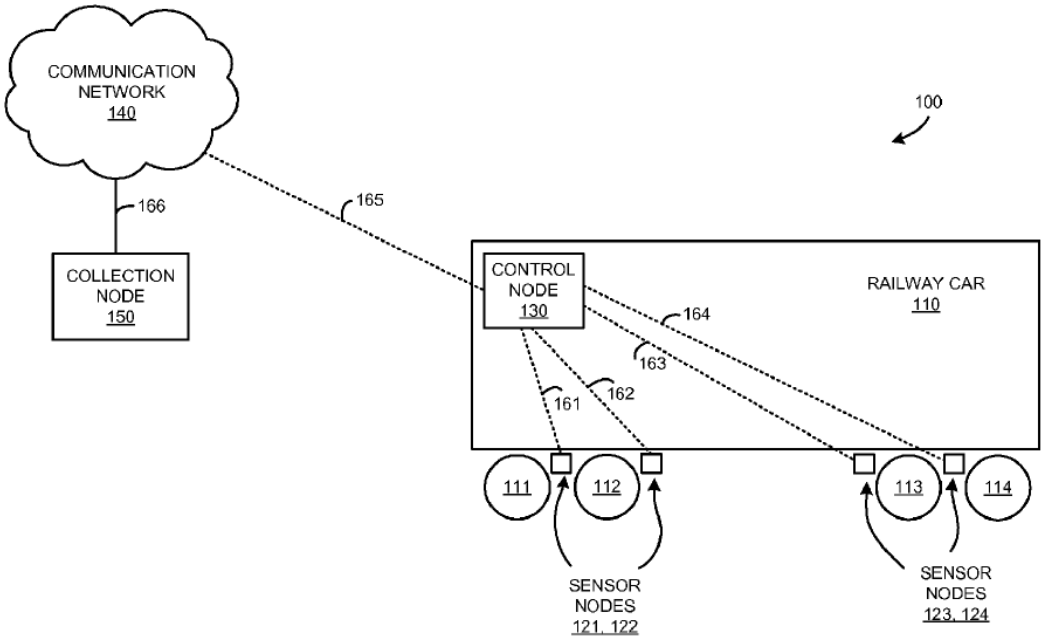

FIGURE 1

Figure 1 is a system diagram illustrating railway car monitoring system 100. *Id.* ¶ 12. System 100 includes railway car 110, undercarriage elements 111–114, sensor nodes 121–124, control node 130, communication network 140, and collection node 150. *Id.* Control node 130 communicates with sensor nodes 121–124 over links 161–164 and communicates with communication network 140 over wireless link 165, and communication network 140 communicates with collection node 150 over link 166. *Id.*

Sensor nodes 121–124 each include equipment to sense and report information about undercarriage elements of a railway car. *Id.* ¶ 14. Each sensor node 121–124 also includes a transceiver portion for communication

with control node 130, using either a wireline transceiver or using a wireless transceiver and antenna for wirelessly communicating with control node 130. *Id.* "Each of sensor nodes 121–124 could also include a processing portion for receiving the sensor information, amplifying, scaling, modifying, adjusting, digitizing, or converting the sensor information, as well as controlling the transceiver portion and sensor portions." *Id.* Each sensor node 121–124 also includes a power system, such as a battery or solar cell. *Id.*

Control node 130 receives information about the undercarriage portion from each of sensors 121–124 and processes the information to determine a fault condition for the undercarriage portion, which includes conditions such as wheel impact or sliding wheel conditions, and temperature. *Id.* ¶ 27. Control node 130 wirelessly reports any fault condition to collection node 150 through communication network 140. *Id.* ¶ 28. Control node 130 processes the information received from sensor nodes 121–124 over a period of time to determine a threshold for reporting the fault condition, or processes the sensor information to determine anomalies from an average, such as an anomaly from a running average of the temperature of all wheels on railway car 110. *Id.* ¶ 29.

2. Prior Art Status of Armitage

Armitage was published on November 17, 2011, from Application No. 13/105,293, which was filed on May 11, 2011, and which claimed priority to Provisional Application No. 61/333,428, which was filed on May 11, 2010. Ex. 1006, Codes (21), (22), (43), (60). Patent Owner argues that Armitage is not prior art to certain claims because the named inventors conceived of and reduced the inventions of those claims to practice before

May 11, 2010, the earliest possible priority date of Armitage.[13] *See* PO Resp. 24–53; Sur-reply 11 n.4.

a. Alleged conception prior to May 11, 2010

i. Patent Owner's arguments

Patent Owner argues that "the Amsted inventors had a definite and permanent idea of the complete invention set forth the '223 Patent as it was intended to be applied in practice, evidenced in a presentation emailed from Andrew Martin SCT Logistics on April 4 [2010]."[14] PO Resp. 31 (citing Ex. 2020; Ex. 2013 ¶ 12); *id.* at 34 ("This . . . provides ample documentary evidence of conception of a specific, settled idea of the invention of the '223 Patent at least by April 4, 2010."). Patent Owner cites declarations of Dr. Shamos (Ex. 2010) and Andrew Martin, an inventor (Ex. 2013). *See id.* at 27–35.

---

[13] In the Patent Owner Response, Patent Owner characterizes its argument as applying to "[t]he '223 invention (except claim 1)." PO Resp. 25. Dr. Shamos, in his declaration (Ex. 2010), has a mapping of the prior invention evidence to all the challenged claims, except claim 1. *See* Ex. 2010, App'x A. In Patent Owner's Sur-reply, Patent Owner states "[f]or clarity, claims 2–10, 18, 20, 21, 23, and 25–32 are subject to [Patent Owner's] prior invention evidence." PO Sur-reply 11 n.4. Patent Owner also states that "[c]laims 1 and 24 have a priority date of March 13, 2013." *Id.* at 9 n.3. However, Patent Owner provides a claim chart mapping the prior invention evidence to the various limitations of certain challenged claims that includes claims 13–17 and 22. Thus, Patent Owner's papers do not provide the "clarity" they profess. Although Patent Owner has not made it easy to parse its allegations, we will treat Patent Owner's allegations as including claims 13–17 and 22 because it has provided a mapping for those claims. We will treat claims 1 and 24 as not included in the prior invention evidence.

[14] Mr. Martin is one of the inventors of the '223 patent. Ex. 1001, Code (72).

ii. Petitioner's contentions

Petitioner contends that Patent Owner's Response "does not contain any claim chart, table, or argument that addresses the ***actual language*** of any challenged claim." Reply 13. Petitioner asserts that "the Patent Owner Response contains only a conclusory statement that 'the Challenged claims were conceived prior to May 2010, i.e., prior to the Armitage filing,' for which it cites the Shamos Declaration (EX2010) and the Martin Declaration (EX2013)." *Id.* Petitioner contends that the declarations fail to address the claim language or provide a claim-by-claim analysis. *Id.* at 14–15.

iii. Analysis

(a) Claims 2–4, 23, and 25–30

We determine that Patent Owner has established that the inventors conceived of a system that continuously monitors bearing temperatures versus ambient temperature (claim 27) using wireless sensor nodes, including electrical circuitry and power sources withing the housing of the wireless sensor nodes positioned on bearing adapters onboard trains, and communications management units in wireless communication with the nodes to broadcast information about the parameter (temperature) being monitored. PO Resp. 27–28, 30–32; Sur-reply 13–14; Ex. 2013 ¶¶ 10 (describing development of wireless sensor nodes (WSNs)), 11 (describing structure of WSNs including how to attach the wires onto the pins of a temperature sensor, which in turn contacts a brass plug for thermal communication and is also connected to an electrical circuit board and soldered to an internal power source (battery) and a printed circuit board that included processing and communication circuitry, thus enabling the device to communicate information regarding the temperature and explaining

Exhibit 2092 (assembly instructions for WSNs)), 14 (describing Exhibit 2162, which explains system where the plurality of the temperature sensing devices that are installed on a plurality of railcars that collect data at periodic intervals and communicate with wireless communication management units (CMUs), wherein the CMUs also receive data from an external (ambient) temperature sensor). Patent Owner has also shown that the inventors had conceived of the wireless sensor nodes and that they could be combined with the CMUs in a mesh network (claim 30), with the capability to broadcast information to locations off the train via satellite (claim 28) and to other nodes via the mesh network (claim 4), and the wireless sensor nodes used wake/sleep power management such that they would typically be off and not using power most of the time (claims 23 and 29). Ex. 2013 ¶¶ 18 (discussing mesh network and power saving mode for wireless sensor nodes discussed in Exhibit 2017 (presentation from IONX dated March 2010) and Exhibit 2018 (metadata from Exhibit 2017 showing date)), 20 (discussing Exs. 2020 and 2021 and figure showing system with satellite communication capabilities).

We also determine that Patent Owner has established that the inventors conceived of a system where the electrical circuitry at the wireless sensor node performs heuristics (i.e., applies rules) to determine if a problem exists (claim 25). *See* Ex. 2013 ¶ 26 (explaining the email communications of Exs. 2031, 2032, 2033 and 2056, which discuss updating the software in the CMUs and the WSNs, including setting the "WSN Absolute Bearing Temp" which is a mote temperature where an alert will be triggered). We further determine that Patent Owner has established that the inventors conceived of a system where the communication management units

determine alarm conditions based on the data collected by the wireless sensor nodes (claim 3) and apply heuristics (i.e., rules) to determine if actual and potential failures exist based on statistical analysis of the data (claim 26). *See* PO Resp. 32–34; Sur-reply 13–14; Ex. 2013 ¶¶ 9 (discussing development of algorithm and heuristics relating to bearing temperature), 14 (describing Exhibit 2162, which explains system where the plurality of the temperature sensing devices that are installed on a plurality of railcars that collect data at periodic intervals and communicate with wireless communication management units (CMUs), wherein the CMUs also receive data from an external (ambient) temperature sensor), 19 (discussing conception of revised alarm levels and Exhibit 2019 describing alarm levels), 20 (discussing April 2010 presentation with figures and description of alarms), 23 (discussing temperature thresholds for system), 26 (explaining the email communications of Exs. 2031, 2032, 2033, and 2056, which discuss updating the software in the CMUs and the WSNs, including setting the "CMU Above Ambient Temperature" and "CMU Axle Differential Interference" which are determined temperature differentials above which an alert will be triggered), 27 (describing work to validate algorithms); Ex. 2020 (describing system with alarms).

We also determine that Patent Owner has established that the inventors conceived of a system where the wireless sensor nodes perform heuristics (i.e., applies rules) to determine if a problem exists (claim 6). *See* Ex. 2013 ¶ 26 (explaining the email communications of Exs. 2031, 2032, 2033, and 2056, which discuss updating the software in the CMUs and the WSNs, including setting the "WSN Absolute Bearing Temp" which is a mote temperature where an alert will be triggered).

(b) Claim 5–10, 18, 31, and 32

We determine that Patent Owner has established that the inventors conceived of a system including electronic temperature sensor nodes (including a processor, memory, temperature sensor (claim 18), power source, communication circuitry, and software for collecting data periodically (claim 8)) mounted on a railcar that that collect data periodically and uses a communication management unit to wirelessly receive data from sensing units that periodically collect readings from multiple sensors (claim 7) on the railcar, heuristically analyze received data to determine actual failures and potential/imminent failures using statistical analysis. *See supra* III.F.2.a.iii.a (discussing conception of wireless sensor nodes with processor, memory, software, power supply, and communication circuitry with respect to claims 2 and 23 and communications management unit using heuristics to detect potential and actual failures using statistical analysis as claimed in claim 26); PO Resp. 27–28, 31–34; Sur-reply 13–14; Ex. 2013 ¶¶ 9 (discussing development of algorithm and heuristics relating to bearing temperature), 14 (describing Exhibit 2162, which explains system where the plurality of the temperature sensing devices that are installed on a plurality of railcars that collect data at periodic intervals and communicate with wireless communication management units (CMUs), wherein the CMUs also receive data from an external (ambient) temperature sensor), 19 (discussing conception of revised alarm levels and Exhibit 2019 describing alarm levels), 20 (discussing April 2010 presentation with figures and description of alarms), 23 (discussing temperature thresholds for system), 26 (explaining the email communications of Exs. 2031, 2032, 2033, and 2056, which discuss updating the software in the CMUs and the WSNs, including setting

the "CMU Above Ambient Temperature" and "CMU Axle Differential Interference" which are determined temperature differentials above which an alert will be triggered), 27 (describing work to validate algorithms); Ex. 2020 (describing system with alarms); Ex. 2146, 8 (sample data every minute); Ex. 2147, 14 (sample data at one-minute intervals during SCT field test); Ex. 2047, 5 (IONX Glossary describes a proprietary power management "wake/sleep" mode that minimizes the draw on the batteries when CMU wakes to get information from sensors); Ex. 2020 (Apr. 1, 2010 email with revised alarm levels that include Stage 1 Bearing Trending that is applied to trending recommendations and repeat offender identifications).

Patent Owner has also shown that the inventors had conceived that the wireless sensor nodes could be combined with the CMUs in a mesh network (claim 30), with the capability to broadcast information to locations off the train via satellite (claim 32) and to other nodes and the communication management unit (CMU) via the mesh network (claim 10), and the wireless sensor nodes used wake/sleep power management such that they would typically be off and not using power most of the time (claims 31). Ex. 2013 ¶¶ 18 (discussing mesh network and power saving mode for wireless sensor nodes discussed in Exhibit 2017 (presentation from IONX dated March 2010) and Exhibit 2018 (metadata from Exhibit 2017 showing date)), 20 (discussing Exs. 2020 and 2021 and figure showing system with satellite communication capabilities).

(c) Claims 13–17

Claims 13 depends from claim 5, and claims 14–17 depend directly or indirectly from claim 13. *See* Ex. 1001, 17:19–45. Claim 13 additionally requires that the system of claim 5 includes "a base unit" that is in

communication with the communication management unit, where *the base unit* performs certain functions. *Id.* at 17:19–28. In particular, claim 13 requires that the base unit: (1) collect data from the communications management unit, (2) display alarm conditions raised by the communications management unit, and (3) determine high level alarms based on data and alarms collected from said communication management unit. *Id.* Claim 14 depends from claim 13 and requires that the "base unit" be in wireless communication with multiple communications management units. *Id.* at 17:29–32. Claims 15 and 16 depend from claim 14. *Id.* at 17:33–41. Claim 15 requires that the "base unit" perform "trend analysis based on alarms and data collected from one or more communication management units to determine if a high level alarm should be raised." *Id.* at 17:33–37. Claim 16 requires that the "base unit" apply "heuristics to data collected from said one or more communication management units to determine if a high level alarm should be raised." *Id.* at 17:37–41. Claim 17 depends from claim 16. *Id.* at 17:42–45. Claim 17 requires that the "base unit" and "one or more communication management units" communicate via satellite or cellular network. *Id.*

We find that Patent Owner has not shown conception of a "base unit" that "display[s] alarm conditions raised by said communication management unit" *and* "determin[es] high level alarms based on data alarms collected from said communication management unit." The Patent Owner Response does not expressly discuss the "base unit." *See* PO Resp. 27–35. It does include images from a presentation showing

> a cab display indicating messages determined from applying heuristics to the received data, including the temperature of the bearing, the affected bearing or axle, the alert type, and the car

> name, demonstrating the ability to communicate alerts in a network with other railcars when the bearing temperature is outside of a certain range."

Id. at 33–34.

These images of the "cab display" is reproduced below.

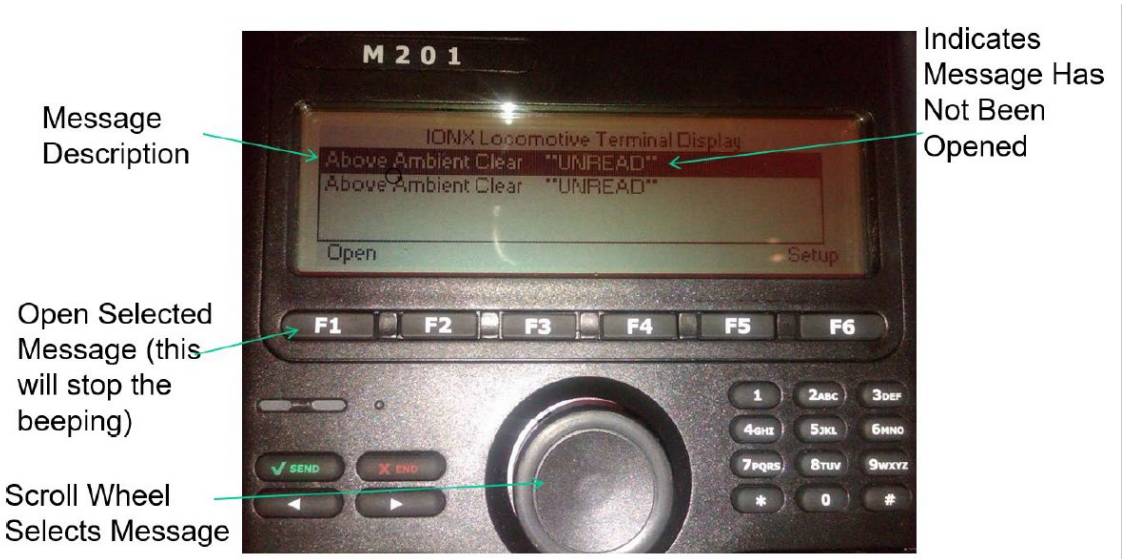

PO Resp. 33–34 (citing Ex. 2020; Ex. 2013 ¶ 20; Ex. 2010 ¶¶ 35–36[15]). This is consistent Declaration of Dr. Shamos (Ex. 2010) that appears to map the limitation that the "base unit . . . displaying alarm conditions" to the cab display in the locomotive. *See* Ex. 2010, App'x A, p. 44–48. The Sur-Reply cross references claims 3, 6, and 13b for this limitation (limitation 13c). *See* Sur-reply 17. The discussion of claims 3 and 6 merely refers to the evidence regarding the various alarm levels. *See id.* at 14, 16. The discussion of claim 13b refers to Paragraph 20 of the Martin Declaration, which "insert[s] pictures of 'a cab display indicating messages,' and describing 'alert instructions.'" *Id.* at 17.

As best as we can discern, Patent Owner identifies the "cab display" as the "base unit" of claims 13–17. *See* PO Resp. 33 ("The presentation also shows a cab display indicating messages determined from applying heuristics to the received data, including the temperature of the bearing, the affected bearing or axle, the alert type, and the car name, demonstrating the ability to communicate alerts in a network with other railcars when the bearing temperature is outside of a certain range."). However, none of the argument provided by Patent Owner or Dr. Shamos or any of the evidence cited (or any of the evidence in the record, based on our page-by-page review of all of the exhibits) shows that the inventors conceived of the *cab display* (i.e., the identified "base unit") "*determining* high level alarms based on data and alarms collected from said communication management unit." Indeed, the evidence appears to show that the cab display unit receives messages that contain the alarms from either the communications

[15] We note that these paragraphs of Dr. Shamos's Declaration do not appear to relate to claims 13–17 or the "base unit" at all.

management units or the IONX offices. *See* Ex. 2020, 4 (showing "Alarms" being transmitted by satellite to the locomotive), 7 (showing cab display with annotation "Incoming Alerts will appear here," "Display will beep *when alarm is received*," "Bright backlight illuminates *when alarm is received*"), 8 (showing cab display and annotations of "Message Description"), 9 (showing "Alert Message Details" including "Car Name," "Affected Bearing or Axle," "Alert Type," "Temperature of Bearing," and "Date and Time Received"). Although Patent Owner may be correct that the alerts in the messages displayed in the cab display are determined from data by applying heuristics, the claim appears to require that the base unit "perform[] the function[] of . . . determining," not some other component in the system. Ex. 1001, 17:19–28. Patent Owner has provided no other evidence, explanation, or claim interpretation of claim 13 that accounts for this limitation.[16] Accordingly, we find that Patent Owner has not shown sufficiently that the inventors conceived of the subject matter of claims 13–17, as claimed, before the non-provisional filing date of Armitage—May 11, 2011.[17]

---

[16] Nor has Patent Owner identified any component, other than the "cab display," that it asserts is the claimed "base unit" of claim 13.

[17] We note that Patent Owner has shown that the base unit (i.e., cab display) can wirelessly communicate with "multiple communications management units" (claim 14) and is capable of satellite communications (claim 17). *See* Ex. 2020. However, because Patent Owner has failed to show that the identified base unit (i.e., cab display) can perform the "determining" step of claim 13 (limitation 13c), Patent Owner has not met its burden of showing conception on claims 14 and 17. Patent Owner has not shown that the base unit (i.e., cab display) "uses distributed event processing to perform trend analysis based on alarms or other data collected from one or more communication management units to determine if a high level alarm should

(d) Claims 20–22

Claims 20–22 depend from claim 5. Ex. 1001, 17:55–18:8. We do not reproduce our analysis of claim 5, but instead focus on the added limitations of these dependent claims. We determine that Patent Owner has established that the inventors conceived of a system where the alarms are based on algorithms "made possible through continuous monitoring" and statistical analysis including "peak analysis"—represented by the percent count of temperature greater than a particular value, distributions—the offset of a particular bearing temperature average versus the wagon bearing temperature distribution. Ex. 2022 (including chart of various detected temperatures and associated actions, and data results and averaged temperatures); Ex. 2050, 4 (describing statistical analysis used to design algorithms and comparing current data against statistical models of data (claims 20 and 22)), 15 (describing data collection over a particular time frame (claim 21)); Ex. 2051, 1 (discussing analysis based on the rate of change (claims 22); Ex. 2058, 1–2 (describing alarm levels); Ex. 2013 ¶ 16 (describing how "bearing temperatures were monitored and analyzed to make bearing temperature algorithms more robust" (claim 20)).

(e) Conclusion

We determine that Patent Owner has demonstrated that the inventors conceived of the invention recited in claims 2–10, 18, 20–23, and 25–32 by April 2010. We also determine that Patent Owner has not demonstrated that

---

be raised" (claim 15) or that the base unit (i.e., cab display) "applies heuristics to data collected from said one or more communication management units to determine if a high level alarm" (claim 16).

the inventors conceived of the invention recited in claims 13–17 before the filing date of the '223 patent.

b. Alleged reduction to practice

i. Patent Owner's contentions

Patent Owner asserts that "[b]y August 2, 2011, the invention claimed in the '223 Patent was reduced to practice." PO Resp. 50. Patent Owner provides a detailed account of research, development, and testing conducted by the inventors to reduce the invention to practice with reasonable diligence between April 2010 and August 2011. *Id.* at 25–52.

ii. Petitioner's arguments

Petitioner argues that all of the development work involved a system for monitoring bearing temperature, and Patent Owner must show that it completed an invention commensurate with the invention in Armitage and the much broader invention claimed in the '223 patent. Pet. Reply 21–22.

iii. Analysis

To establish an actual reduction to practice, Patent Owner must show that it made an embodiment or performed a process that met all limitations of the claimed invention and determined that the invention would work for its intended purpose. *In re Steed*, 802 F.3d 1311, 1318 (Fed. Cir. 2015); *Cooper v. Goldfarb*, 154 F.3d 1321, 1327 (Fed. Cir. 1998).

We determine that Patent Owner has established that it reduced to practice an embodiment that meets all limitations of claims 2–10, 18, 20–23, and 25–32 with reasonable diligence from the inventors' conception of that invention in April 2010 (before Armitage's earliest possible filing date of May 11, 2010 (Ex. 1006, Codes (21), (60)) to actual reduction to practice of that invention by August 2011. PO Resp. 25–52; Sur-reply 23–24.

Petitioner does not dispute that the temperature monitoring system meets all limitations of claims 2–10, 18, 20–23, and 25–32. Pet. Reply 22–23.

Patent Owner's conception and reduction to practice of a temperature monitoring system does not have to antedate Armitage's description of other monitoring systems. The holding in *Mylan Pharma. Inc. v. Merck Sharp & Dohme Corp.*, 50 F.4th 147, 154–155 (Fed. Cir. 2022) is inapposite because the prior art did not disclose any embodiment within the scope of the claims.

iv. Summary as to Prior Invention

We determine that Patent Owner has demonstrated that the inventors reduced to practice an embodiment that met all limitations of claims 2–10, 18, 20–23, and 25–32 with reasonable diligence from their conception in April 2010 before Armitage's earliest possible filing date of May 11, 2010, until August 2011. We determine that Patent Owner has not shown that the inventors reduced to practice an embodiment that met all the limitations of claims 13–17 before the non-provisional filing date of Armitage.

c. Conclusion

Armitage is not prior art to claims 2–10, 18, 20–23, and 25–32. Armitage is prior art to claims 13–17.

3. Summary

Because Armitage is not prior art to claims 2, 3, and 26–28, which are the claims challenged in Ground 4, we determine that Petitioner has failed to show by a preponderance of the evidence that claims 2, 3, and 26–28 would have been obvious over Armitage.

A. Ground 5: Obviousness Over Armitage and LeFebvre

Petitioner contends that the combination of Armitage and LeFebvre would have rendered the subject matter of claims 4–10, 13–18, 20–23, 25,

and 29–32 obvious to one of ordinary skill in the art at the time of the invention. Pet. 68–84. Patent Owner opposes. PO Resp. 53–61.

1. Claims 4–10, 18, 20–23, 25, and 29–32

As we explained above, Armitage is not prior art to claims 4–10, 18, 20–23, 25, and 29–32. Petitioner's arguments for these claims rely on Armitage for a number of the limitations. Thus, we find that Petitioner has failed to show by a preponderance of the evidence that claims 4–10, 18, 20–23, and 29–32 are unpatentable as obvious over the combination of Armitage and LeFebvre.

2. Claims 13–17

a. Scope and Content of the Prior Art

We have summarized Armitage and LeFebvre above.

b. Differences Between the Prior Art and the Claim Invention

i. Petitioner's Contentions

Claim 13 depends from Claim 5.[18] With respect to claim 5, Petitioner contends Armitage discloses "a mobile railway car monitoring system." *See* Pet. 56–57 (citing Ex. 1006, Code (57), Fig. 1; Ex. 1003 ¶ 251), 74 (citing Ex. 1003 ¶ 282). Petitioner further argues that Armitage's monitoring system includes "a plurality of sensor nodes coupled to an undercarriage portion of a railway car." *Id.* at 57–58 (citing Ex. 1006 ¶¶ 4, 12, 14;

[18] As we determined above, the invention recited in claim 5 has a priority date of at least April 2010, which is before the earliest possible priority date of Armitage. Thus, Armitage is not prior art to the invention recited in claim 5. However, we have found that Armitage is prior art to the subject matter recited in claims 13–17. Thus, we compare the limitations recited in base claim 5 to Armitage as required for our analysis of dependent claims 13–17.

Ex. 1003 ¶ 252), 74 (citing Ex. 1003 ¶ 283). Petitioner notes that Armitage discloses that each sensor node "includes a sensor portion" that "could include thermometer" or "other sensing equipment and circuitry." *Id.* at 58 (citing Ex. 1006 ¶¶ 14, 33–34, 56, Figs. 1, 3; Ex. 1003 ¶ 254), 74 (citing Ex. 1003 ¶¶ 284, 290). Petitioner notes that Armitage describes that the sensor nodes "comprise a power system, such as a battery or solar cell," and a wireless transceiver for communicating with a control node. *See* Pet. 62 (citing Ex. 1006 ¶¶ 14, 26, 33, 54, 57, Fig. 6; Ex. 1003 ¶¶ 266, 268–270), 74 (citing Ex. 1003 ¶ 285). Petitioner submits that Armitage discloses that each sensor node "include[s] a processing portion for receiving the sensor information, amplifying, scaling, modifying, adjusting, digitizing, or converting the sensor information, as well as controlling the transceiver portion and sensor portions." *Id.* at 60 (citing Ex. 1006 ¶ 14, Fig. 6), 74 (Ex. 1003 ¶ 286). Petitioner also contends that the processor system in each sensor node of Armitage includes a storage system comprising at least one "memory device." *Id.* at 74 (citing Ex. 1006 ¶ 55; Ex. 1003 ¶¶ 287–288). Petitioner submits that Armitage also discloses that each sensor node comprises software. *See* Pet. 71 (citing Ex. 1006 ¶ 55 ("Processing system 620 retrieves and executes software 622 from storage system 621."); Ex. 1003 ¶ 347), 74. Petitioner relies on LeFebvre to disclose the limitation of claim 5 that requires collecting data at periodic intervals. *See* Pet. 71–72. In particular, Petitioner argues that a person of ordinary skill in the art would have been motivated to modify Armitage to incorporate the "power-saving scheme described by LeFebvre (where an electronic device enters a sleep mode to save power, and awakens periodically to collect data, perform computations, and transmit data over a network) was a well-known, standard

practice prior to the priority date of the '223 Patent," and it provides the benefit of saving power. *Id.* at 71–72 (citing Ex. 1005 ¶¶ 34–35; Ex. 1003 ¶ 350), 75.

Petitioner asserts that Armitage's system includes a "control node" (i.e., a communication management unit) on each railcar. *Id.* at 63 (citing Ex. 1006 ¶¶ 4, 12, Figs. 1, 3, 5; Ex. 1003 ¶ 271), 75 (citing Ex. 1003 ¶ 291). Petitioner argues that the control node communicates wirelessly with each sensor node on the railcar, using, for example, WiFi or Bluetooth, both of which provide two-way communication. *Id.* at 63 (citing Ex. 1006 ¶ 21, Fig. 1; Ex. 1003 ¶ 272). Armitage discloses that control node 130 is also capable of broadcasting information upstream to communication network 140 over wireless link 165 using, for example, WiFi, cellular networks (e.g., LTE, GSM, or CDMA), and satellite networks (e.g., Iridium) to provide two-way communication. *Id.* at 63–64 (citing Ex. 1006 ¶ 22; Ex. 1003 ¶ 273).

Petitioner also contends that Armitage discloses a communication management unit that collects data from a plurality of sensor devices and uses heuristics to determine actual and potential failures based on a statistical analysis of the collected data. *Id.* at 64–66. In particular, Petitioner argues that, in Armitage's system, sensors on the railcar send data to the control node, which collects and analyzes the data to determine whether a fault conduction is present. *Id.* at 64–65 (citing Ex. 1006 ¶ 27). If a fault condition is detected, the control node report an alarm message to the collection system. *Id.* at 65 (citing Ex. 1006 ¶ 28; Ex. 1003 ¶ 277). Petitioner contends that a person of ordinary skill in the art would understand that Armitage's disclosure that "[a] single wheel sensor anomaly

might . . . indicate a 'wheel out of round' or 'flat spot' condition, where a non-round geometry of a wheel can cause vibrations or shocks at a certain portion of each rotation of a wheel, " and "outliers for sensor nodes on an entire side of railway car 310 could indicate a cornering failure, or an off-track condition," are examples of heuristics. *Id.* (citing Ex. 1006 ¶ 42; Ex. 1003 ¶ 278).

Petitioner argues that Armitage also discloses that control node can perform statistical analysis on the collected data to detect failure. *Id.* at 65. For example, Petitioner notes that the control node can "process the sensor information to determine anomalies from an average, such as an anomaly from a running average of the temperature of all wheels on a railway car." *Id.* (citing Ex. 1006 ¶ 29). Petitioner submits that "Armitage also discloses the use of a 'moving average and trend analysis' to detect 'statistically significant deviations' that are indicative of failure." *Id.* at 65–66 (citing Ex. 1006 ¶¶ 30, 45). Petitioner argues that Armitage can distinguish between potential failures (which require maintenance) and actual failures (which require immediate service). *Id.* at 66 (citing Ex. 1003 ¶ 280; Ex. 1006 ¶ 44).

With respect to dependent claims 13–17, Petitioner argues that Armitage discloses that its control node communicates with a "collection system" or collection node." *Id.* at 75 (citing Ex. 1006 ¶¶ 4, 19–20, 38, Fig. 1). Petitioner asserts that a person of ordinary skill would understand that a "collection node" is a "base unit" of claim 13. *Id.* (citing Ex. 1003 ¶ 295). Petitioner notes that Armitage discloses that the collection node can communicate wirelessly with multiple control nodes (claim 14) using WiFi, cellular, or satellite technologies (claim 17). *Id.* at 76–77 (citing Ex. 1006 ¶¶ 18, 20, 22, 37, 38; Ex. 1003 ¶¶ 296–299). Petitioner argues that

"collection node 150 comprises equipment for receiving fault conditions, sensor information, location information, or other information from control node 130." *Id.* at 77 (citing Ex. 1006 ¶¶ 19, 37; Ex. 1003 ¶ 300) (emphasis omitted). Armitage also discloses that "[c]ollection node 340 could include a user interface for displaying a status of control node 330 or sensor nodes 320-327 to a user." *Id.* at 77 (citing Ex. 1006 ¶ 39; Ex. 1003 ¶¶ 301–302). Petitioner argues that a person of ordinary skill in the art would have understood it to be useful to include the alarm messages from the control nodes in this user interface. *Id.* at 77–78 (citing Ex. 1003 ¶ 302). Petitioner also argues that the collection node (i.e., the base unit) can analyze the information collected from one or more control units (i.e., CMUs) for the purpose of detecting high level fault conditions. *Id.* at 78–79 (citing Ex. 1003 ¶¶ 303–305; Ex. 1006 ¶¶ 38, 43).

Petitioner contends that Armitage discloses that the collection node "may be distributed among multiple processing devices," and the collection node is therefore capable of "distributed event processing," as recited in claim 15. *Id.* at 79 (citing Ex. 1006 ¶¶ 19, 37; Ex. 1003 ¶ 308). Petitioner submits that Armitage also discloses that its system may perform "trend modeling" to "identif[y] specific sensor telemetry that lies outside norms." *Id.* (citing Ex. 1006 ¶ 44). Petitioner argues that a person of ordinary skill in the art "would have been motivated to use trend analysis (e.g., as described in paragraphs [0030] and [0044] of Armitage) due to the 'vastly improved failure prediction capability' that trend analysis provides." *Id.* at 80 (citing Ex. 1007 ¶ 42; Ex. 1003 ¶ 310).

With respect to claim 16, Petitioner argues that the collection node (i.e., the base unit) can apply heuristics to data collected from multiple

communication management units to determine if a high level alarm should be raised. *Id.* at 80–81 (citing Ex. 1003 ¶¶ 312–315).

ii. Patent Owner's Arguments

Patent Owner raises several arguments regarding this ground. PO Resp. 53–61. First, Patent Owner argues that LeFebvre's disclosure of power management is not the same as "collection of data at periodic intervals," as recited in claim 5. *Id.* at 54. Second, Patent Owner argues that Petitioner has failed to show an adequate motivation to combine Armitage and LeFebvre. *Id.* at 54–56. Third, Patent Owner argues that Armitage does not use statistical analysis techniques for predictive purposes. *Id.* at 56–59. Finally, Patent Owner argues that Armitage does not predict future failures as required by claim 5. *Id.* at 59–61.

iii. Analysis

Of the limitations of claims 13–17, Patent Owner only disputes whether Armitage and LeFebvre discloses limitations 5(g) and limitations 5(i)–(k) of independent claim 5. *See* PO Resp. 22–23. Patent Owner does not dispute the remaining limitations of claim 5 and the additional limitations of claims 13–17. *Id.* With respect undisputed limitations, we find Petitioner's contentions set out above persuasive and determine that Petitioner has shown by a preponderance of the evidence that the combination of Armitage and LeFebvre accounts for those limitations. *See* Pet. 68–72, 75–81. Moreover, as we explained above, we disagree with Patent Owner's contention that LeFebvre fails to disclose periodically collecting data. *See supra* III.C.2.b.iii. We focus our analysis on the remaining disputed limitations and motivation to combine.

(a) Motivation to Combine

Patent Owner's main argument regarding the motivation to combine rests on its contention that "Armitage relies on a data analysis technique that requires 'continuous monitoring' and there is no indication in Armitage that power saving is a concern." PO Resp. 54 (citing Ex. 1006 ¶ 44; Ex. 2010 ¶¶ 71–72). Patent Owner argues that Armitage, thus, teaches against making the combination. *Id.* at 54–55. In particular, Patent Owner contends that incorporating LeFebvre's lower power mode would "frustrate the ability of Armitage's sensor to 'continuous[ly] monitor[] all critical railway components.'" *Id.* at 55. Patent Owner asserts that "[w]hile such a modification to Armitage would not render to the invention disclosed in Armitage 'inoperable,' it is inconsistent with continuous monitoring." *Id.*

We determine that Petitioner has shown an adequate motivation to combine LeFebvre's power saving mode with Armitage. *See* Pet. 68–69, 71–72; Ex. 1003 ¶ 350. We disagree with Patent Owner's contention that LeFebvre's power saving mode would frustrate Armitage's alleged goal of continuous monitoring. The cited paragraph of Armitage merely states that "[r]ealtime, continuous monitoring of all critical railway car components *can be* monitored," Ex. 1006 ¶ 44 (emphasis added), not that monitoring must be continuous or that it is "vital" as Dr. Shamos, Ex. 2010 ¶ 72. The same paragraph of Armitage also explains that "[i]n some examples, each railway car sensor array reports every 'n' seconds to the DCU [Data Correlation Unit (i.e., communication management unit)]. . . ." Ex. 1006 ¶ 44. Thus, Armitage already contemplates some gap between data collections from the sensors.

We find that, although changing the interval between data collections from the sensors might reduce the accuracy of the system, this is a ubiquitous concern in any data collection operation. "A given course of action often has simultaneous advantages and disadvantages, and this does not necessarily obviate motivation to combine." *Allied Erecting & Dismantling Co. v. Genesis Attachments, LLC*, 825 F.3d 1373, 1381 (Fed. Cir. 2016). Mr. Ricca explains, a person of ordinary skill in the art "would understand that power management techniques for electronic components can involve entering a low-power state 'sleeping' for very short periods, on the order of milliseconds," and "most components on a railcar will change their state very slowly." Ex. 1033 ¶ 13. He further explains, "[r]ailcar wheel bearings, for example, are large metallic components having a very high thermal mass," and "[t]aking a bearing temperature reading every few seconds is more than enough to capture any meaningful changes in bearing temperature, and would be considered 'continuous' monitoring by anyone in the railroad industry." *Id.* Indeed, as Mr. Ricca notes, LeFebvre contends that it is also system for continuous monitoring. *See* Ex. 1005 ¶¶ 4, 6 ("This invention has the objective of providing a means for continuously, while in service, monitoring the behavior and condition of . . . a railroad car. . . ."). We find Mr. Ricca's testimony persuasive, well-supported by the record evidence, and entitled to significant weight.

Finally, we note there is no need for Armitage to recognize that power saving was a concern. *See DyStar Textilfarben GmbH & Co. Deutschland KG v. C.H. Patrick Co.*, 464 F.3d 1356, 1361 (Fed. Cir. 2006) ("The motivation need not be found in the references sought to be combined, but

may be found in any number of sources, including common knowledge, the prior art as a whole, or the nature of the problem itself.”).

Accordingly, we find that Petitioner has shown sufficiently that a person of ordinary skill in the art would have been motivated to combine Armitage and LeFebvre in the manner proposed.

(b) “Statistical Analysis”

Patent Owner asserts that Armitage merely discloses establishing an event ranking for a deviation from normal conditions based on a comparative analysis of sensor data to the population of sensor data. Instead, Patent Owner argues that Armitage discloses a type of analysis not predicated on performing a statistical analysis of the data collected from a specific sensor or even a pool of individual sensor data, but rather a comparative analysis using basic arithmetic. PO Resp. 58 (citing Ex. 2010 ¶ 79). Patent Owner contends that “Armitage may only determine a fault condition by scanning for outliers, e.g., by comparing single sensor data against a corresponding pool of sensor data from a plurality of sensors to find outliers.” *Id.* (citing Ex. 1006 ¶ 42; Ex. 2010 ¶ 79). Patent Owner argues that a person of ordinary skill in the art would understand that the methodologies contemplated by Armitage are merely comparative in nature and can only establish a fault condition based on how much a single sensor deviates from the other sensors on the railcar. *Id.* at 59 (citing Ex. 2010 ¶ 104). Patent Owner assert that the system of Armitage requires a plurality of sensors to determine outliers. *Id.*

We find that Petitioner has shown sufficiently that Armitage discloses the use of statistical analysis and heuristics in determining actual and potential failures. *See* Pet. 64–66; Ex. 1003 ¶¶ 276–281. We begin by

noting that Patent Owner's arguments about Armitage requiring a plurality of sensors are irrelevant because base claim 5 encompasses using more than one sensor by reciting that the communication management unit "analyze[s] data collected from said *one or more sensor units*." Thus, whether Armitage requires multiple sensor units is not relevant to our analysis of the claim. *See* Ex. 2010 ¶ 80 (arguing the techniques would not work with a single sensor). Moreover, Armitage expressly discloses that it uses "a standard deviation metric" and a heuristic "such as when data from a sensor node deviates by more than three standard deviations" to identify problems. Ex. 1006 ¶ 41. We find that the use of "standard deviations" is a type of statistical analysis. *See* Ex. 1003 ¶ 279; Ex. 1033 ¶¶ 9–10 (explaining types of statistical analysis, including determining deviations). Armitage also identifies other "heuristics" (i.e., rules) that it applies. For example, Armitage states that

> For example, when only one of sensor nodes 320-327 indicates outlier data as shown in FIG. 4, it could be determined that a wheel bearing or hotbox condition for a single wheel has occurred. A single wheel sensor anomaly might also indicate a 'wheel out of round' or 'flat spot' condition, where a non-round geometry of a wheel can cause vibrations or shocks at a certain portion of each rotation of a wheel. Taking sensor node 325 as an outlier in this example, then the right wheel of wheel assembly 314 could have a failure. In examples where two outliers occur for the same wheel assembly, then a failure of the entire wheel assembly could be determined, such as when an axle is damaged or brake applied mistakenly[.] Likewise, outliers for sensor nodes on an entire side of railway car 310 could indicate a cornering failure, or an off-track condition. Wheel assemblies can be referred to as 'trucks' in some examples, where two trucks are included on a railcar, each truck including four wheels on two axles. If four sensors, all on the same truck, deviate from the other four sensors on a railcar, a

> truck bearing failure condition could be determined. Other failure modes could be determined based on outlier data determined by any of sensor nodes 320-327

Ex. 1006 ¶ 42.

We note that these "heuristics" are similar to the "heuristics" listed in the table in columns 8 to 12 of the '223 patent.

Accordingly, we find that Petitioner has shown sufficiently that Armitage discloses using heuristics and statistical analysis to analyze sensor data as required by claim 5.

(c) "Predict Potential or Imminent Failures Based on a Statistical Analysis of Said Collected Data"

Patent Owner argues that Petitioner failed to show that Armitage teaches "predict[ing] potential or imminent failures based on a statistical analysis of said collected data." PO Resp. 60–61 (emphasis omitted). In particular, Patent Owner argues that the cited portions of Armitage (Paragraph 44) only refers to a currently detected failure, not predicting potential or imminent failures. *Id.* at 60.

We find that Petitioner has shown sufficiently that Armitage teaches "predicting potential or imminent failures." *See* Pet. 66. As Petitioner explains, "Armitage also indicates its system can distinguish between potential failures (which warrant maintenance) and actual failures (which require immediate service)." *Id.* (citing Ex. 1003 ¶ 280; Ex. 1006 ¶ 44). In particular, Armitage teaches that

> Each event could be ranked by severity and status could be provided periodically, such as twice daily, to provide railcar location and system status. The event ranking could include a 'yellow' condition which indicates that a railway car requires service, and a 'red' condition which indicates that a sensor has

> detected a serious deviation from normal operations that requires immediate service.

Ex. 1006 ¶ 44; Ex. 1003 ¶¶ 276–281. We agree with Petitioner and Mr. Ricca that a system that can distinguish between "events" that require "immediate service" and events that do not require immediate maintenance, but do require service, is a system that can detect "potential" failures. Indeed, Armitage recognizes the differences when it teaches that

> Analysis in both the temporal and sensor domains could be used to define a dynamic set of norms for the operating conditions of each mechanical component. Any significant deviation from these measurements is indicative of failure or ***projected failure***. . . . The degree to which any specific sensor deviates from this population is indicative of the severity of the mechanical condition of the component. When a deviation is detected, a wireless transmitter associated with the DCU could be activated and an alert generated. For example, when a sensor exhibits 'significant' deviation from the normal conditions, an event is generated by the DCU.

Ex. 1006 ¶ 43 (emphasis added). Thus, we agree with Petitioner that Armitage teaches determining potential failures as recited in claim 5.

iv. Summary

Thus, we find that Petitioner has shown that the combination of Armitage and LeFebvre accounts for all the limitations of claims 13–17 and that a person of ordinary skill in the art would have been motivated to combine the teachings of those references in the manner suggested.

c. Objective Indicia

As we found above, Patent Owner's evidence of objective indicia of nonobviousness is entitled to no weight in our analysis.

d. Conclusion as to Obviousness

Accordingly, for the reasons explained above and weighing all of the evidence together, we find that Petitioner has shown by a preponderance of the evidence that claims 13–17 would have been obvious over the combination of Armitage and LeFebvre.

B. Ground 6: Obviousness Over Armitage, LeFebvre, Denny, and Provasnik

Petitioner contends that the combination of Armitage, LeFebvre, Denny, and Provasnik would have rendered the subject matter of claims 1 and 24 obvious to one of ordinary skill in the art at the time of the invention. Pet. 84–86. Patent Owner opposes. PO Resp. 62–64.

1. Scope and Content of the Prior Art

The prior art references are summarized above.

2. Differences Between the Claimed Invention and the Prior Art

a. Petitioner's Contentions

Petitioner contends that Armitage discloses "a sensor device for monitoring temperature on a railcar," Pet. 56–57 (citing Ex. 1006, Fig. 1), a "housing mountable on a railcar," Pet. 60 (citing Ex. 1006 ¶¶ 15, 34; Ex. 1003 ¶ 259), a "temperature sensor," Pet. 59 (citing Ex. 1006 ¶¶ 14, 33, 56; Ex. 1003 ¶ 257), "electrical circuitry in communication with said temperature sensor for obtaining information regarding the temperature being sensed, said electrical circuitry positioned within said housing," Pet. 60–61 (citing Ex. 1006 ¶¶ 14, 53, 55, Fig. 3, 6; Ex. 1003 ¶¶ 263–264), and "a communication device capable of broadcasting information regarding the temperature sensed, said communication device positioned within said

housing," Pet. 62–63 (citing Ex. 1006 ¶¶ 14, 26, 33, 54, Fig. 6; Ex. 1003 ¶¶ 268–270).

Petitioner relies on the combined teachings of Armitage, Denny, and Provasnik to account for the limitation "a probe external to said housing and which probe includes said temperature sensor and a magnet positioned to magnetically attract the part of the railcar against which the probe will be placed." Pet. 53–55, 85–86 (citing Ex. 1006 ¶ 15; Ex. 1003 ¶¶ 236–242, 374–375; Ex. 1008, 2:24–27; Ex. 1009, 1:8–15; 1:38–44, 4:65–68). Petitioner argues that a person of ordinary skill in the art would have been motivated to combine Armitage, Denny, and Provasnik because external temperature sensors were well known, well-understood advantages (e.g., monitoring high-temperature components), and magnet attachment were standard, commonly used components with well-understood advantages (e.g., releasably attaching a sensor to a metallic substrate). *See* Pet. 54–55, 85–86; Ex. 1003 ¶¶ 238–244, 374–376.

Finally, Petitioner relies on the combination of Armitage and LeFebvre for the limitation "wherein the power consumption of said sensor device is managed by placing said sensor device in a standby state and periodically awakening said sensor device to collect readings from said temperature sensor and to transmit the information regarding the temperature sensed via said communication circuitry." *See* Pet. 34 (citing Ex. 1005 ¶¶ 34–35; Ex. 1003 ¶¶ 145–147), 71–72 (citing Ex. 1005 ¶¶ 34–35; Ex. 1003 ¶¶ 349–351), 86. Petitioner relies on the reasoning set forth above for combining Armitage and LeFebvre. *See* Pet. 71–72.

Claim 24 depends from claim 23 and is similar in scope to claim 1, except most significantly that it does not require that the probe

"magnetically attract the part of the railcar." Ex. 1001, 18:9–35. Petitioner relies on a similar mapping to the prior art as claim 1. *See* Pet. 86.

b. Patent Owner's Arguments

Patent Owner raises two main arguments regarding this ground. PO Resp. 62–63. First, Patent Owner argues that Petitioner has failed to show a motivation to combine Armitage with LeFebvre. *Id.* at 62. Second, Patent Owner argues that Petitioner's analysis regarding claim 8 cannot apply to claim 1 because they have different scope. *Id.* at 62–63

c. Analysis

We have already addressed Patent Owner's arguments regarding the motivation to combine Armitage and LeFebvre. *See supra* III.G.2.b.iii.a. As for Patent Owner's arguments regarding claim 8, Petitioner's analysis clearly deals with power savings. *See* Pet. 71–72. Thus, we do not find Patent Owner's second argument, which pertains to the scope of claim 1, persuasive. Instead, we find Petitioner's evidence and argument sufficient to meet its burden.

d. Summary

Thus, we find that Petitioner has shown that the combination of Armitage, LeFebvre, Denny, and Provasnik accounts for all the limitations of claims 1 and 24 and that a person of ordinary skill in the art would have been motivated to combine the teachings of those references in the manner suggested.

3. Objective Indicia of Nonobviousness

As we found above, Patent Owner's evidence of objective indicia of nonobviousness is entitled to no weight in our analysis.

4. Conclusion as to Obviousness

Accordingly, for the reasons explained above and weighing all of the evidence together, we find that Petitioner has shown by a preponderance of the evidence that claims 1 and 24 would have been obvious over the combination of Armitage, LeFebvre, Denny, and Provasnik.

IV. PATENT OWNER'S MOTION TO EXCLUDE

Patent Owner seeks to exclude Exhibit 1034 and page 10 of the Reply that relies on the allegedly inadmissible exhibit. PO MTE 1; *see* PO MTE Reply. Petitioner opposes Patent Owner's Motion. PO MTE Opp. For the following reasons, we dismiss as moot Patent Owner's Motion to Exclude.

Exhibit 1034 is a copy of U.S. Patent Application No. 61/333,428, and is a provisional patent application filed on May 11, 2010. Ex. 1034, 1. Armitage claims priority to this provisional patent application. *See* Ex. 1006, Code (60).

Because we determine that Armitage is not prior art to the challenged claims even if we relied on the priority date of the provisional patent application, we dismiss Patent Owner's Motion to Exclude as *moot*.

V. PATENT OWNER'S MOTION TO AMEND

Pursuant to 35 U.S.C. § 316(d)(1) and 37 C.F.R. § 42.121(a), Patent Owner filed a Contingent Motion to Amend requesting that if claims 1–10, 13–18, and 20–32 were found unpatentable, the Board substitute "any claim found to be unpatentable" and issue the corresponding substitute claims 33–61. RMTA 2–3. Having determined that Petitioner has shown by a preponderance of the evidence that original claims 1, 5–10, 13–18, and 20–22, 31, and 32 of the '223 patent are unpatentable, we proceed to address a

portion of Patent Owner's Revised Motion. Patent Owner proposes substitute claims 33–36 to replace challenged patent claims 1–4, proposes substitute claims 37–41 to replace challenged claims 26–30, proposes substitute claim 42 to replace challenged claim 5, proposes claims 43–58 to replace challenged claims 6–10, 13–18, 20–22, 31, and 32, and proposes substitute claims 59–61 to replace challenged claims 23–25. *Id.* A copy of proposed substitute claims 33–61 is provided by Patent Owner in the Claims Appendix of the Motion. We only reach claims 33, 42–58, and 60 because those correspond to the claims we found unpatentable.

For the reasons discussed below, Patent Owner has shown that proposed substitute claims 33 and 60 meet the statutory and regulatory requirements set forth in 35 U.S.C. § 316(d) and 37 C.F.R. § 42.121. For the reasons discussed below, we further find that Petitioner has proven by a preponderance of the evidence that proposed substitute claims 42–58 are unpatentable over prior art, but has not proven by a preponderance of the evidence that proposed substitute claims 33 and 60 are unpatentable over prior art. We do not reach the parties contentions regarding claims 34–41, 59, and 61, because we did not find claims 2–4, 26–30, 23, and 24 unpatentable, which correspond to claims 34–41, 59, and 61. Therefore, we *grant in part* Patent Owner's Revised Motion to Amend.

A. Principles of Law

In an *inter partes* review, amended claims are not added to a patent as of right, but rather must be proposed as a part of a motion to amend claims. 35 U.S.C. § 316(d). Ordinarily, the petitioner "bears the burden of persuasion to show, by a preponderance of the evidence, that any proposed substitute claims are unpatentable." 37 C.F.R. § 42.121(d)(2); *Lectrosonics*,

Inc. v. Zaxcon, Inc., IPR2018-01129 Paper 15, 3–4 (PTAB Feb. 25, 2019) (precedential).

But before considering the patentability of the substitute claims, we first must determine whether the motion to amend meets the statutory and regulatory requirements set forth in 35 U.S.C. § 316(d) and 37 C.F.R. § 42.121. *Lectrosonics*, Paper 15 at 4. In that regard, Patent Owner bears the burden of persuasion to show that: (1) the amendment proposes a reasonable number of substitute claims; (2) the amendment responds to a ground of unpatentability involved in the trial; (3) the amendment does not seek to enlarge the scope of the claims of the patent or introduce new subject matter; and (4) the original disclosure sets forth written description support for each proposed substitute claim. *Id.*; 35 U.S.C. § 316(d); 37 C.F.R. § 42.121(d)(1).

B. The Proposed Substitute Claims

Patent Owner proposes to amend the '223 patent by adding new claims 33–61 as respective substitutes for original claims 1–10, 13–18, and 20–32. *See* RMTA 2–3; *see also* RMTA Claims App. A. Claim 33 is proposed as a substitute for original claim 1 and is reproduced below. Underlined language reflects subject matter added to original claim 1, and strike-through indicates deletion.

> ~~1.~~ <u>33.</u> A sensor device for monitoring temperature on a railcar, comprising:
>
> a housing <u>providing a first piece</u> mountable on a railcar;
>
> a temperature sensor;
>
> electrical circuitry in communication with said temperature sensor <u>via a cable</u> for obtaining information

regarding the temperature being sensed, wherein said electrical circuitry is positioned within said housing, and said cable has a proximal end disposed in the housing and a distal end residing external to said housing;

a power source electrically connected to said electrical circuitry ~~to provide~~ for providing power thereto, said power source positioned within said housing;

a probe providing a second piece external to and separated from the first piece provided by said housing, said second piece ~~and which probe~~ comprising a sensor probe head that (i) is spaced apart from the housing, (ii) has a body formed of a heat conductive material, (iii) has a connector electrically interfaced with said temperature sensor and configured to connect to a corresponding electrical connector at the distal end of the cable and includes said temperature sensor, and (iv) a magnet positioned in the body adjacent to a portion of the connector extending inside the body, the magnet configured to magnetically attract the part of the railcar against which the sensor probe head will be placed; and

a communication device configured to broadcast ~~capable of broadcasting~~ information regarding the temperature sensed, said communication device positioned within said housing;

wherein the power consumption of said sensor device is managed by placing said sensor device in a standby state and periodically awakening said sensor device to collect readings from said temperature sensor and to transmit the information regarding the temperature sensed via said communication device ~~circuitry~~.

RMTA Claims App. A, i–ii.

Independent claim 34 is proposed as a substitute for original independent claim 2 and is reproduced below with underlining and strike-through, as above.

~~2.~~ 34. A system for monitoring a railcar, comprising:

a plurality of sensor devices each located on and mounted to a sidewall of a bearing adapter of the railcar for monitoring parameters or conditions of a bearing of the railcar, each of said sensor devices being separate from one another and including a sensor for monitoring one of said parameters or conditions of the bearing of the railcar;
said plurality of sensor devices including at least one temperature sensor device having:
a housing comprising a non-flexible material that is resistant to environmental damage;
a temperature sensor in thermal communication with an item consisting of the bearing adapter of the railcar for which the temperature is being monitored, which item is external to said housing;
electrical circuitry in communication with said temperature sensor for obtaining information regarding the temperature being ~~sensed~~ monitored, said electrical circuitry positioned within said housing;
a power source electrically connected to said electrical circuitry for providing power thereto, said power source positioned within said housing;
a communication device capable of broadcasting information regarding the temperature being monitored ~~sensed~~ via wireless communication, said communication device positioned within said housing, wherein said information regarding the temperature being monitored comprises data representing a condition of the bearing; and
a communication management unit, mounted on the railcar, capable of two way wireless communication with each of said plurality of sensor devices for receiving information therefrom, said communication management unit having a wireless communication device for broadcasting information about the parameter or condition being monitored to a land-based remote station, wherein at least one of the communication management unit or the remote station is configured to (i) correlate one or more numeric values derived from the data to the condition of the bearing, (ii) determine a severity of the condition of the bearing, and (iii) determine an alarm condition based on the severity of the condition of the bearing, wherein said alarm

> condition comprises one or more recommended actions to be taken with respect to the bearing.

RMTA, Claims App. A, ii–iii.

Proposed substitute independent claim 42 contains many of the same newly added limitations as proposed substitute claim 34. *Compare* RMTA Claims App. A, ii–iii, *with id.* at v–vi. Indeed, Patent Owner and Petitioner both refer to claim 34 for the limitations of claim 42. *See* RMTA 14–15, RMTA Opp. 19. For completeness, we reproduce claim 42 below:

> ~~5.~~ 42. A system for monitoring the operation of a railcar comprising:
>
> a. one or more sensor units mounted to a sidewall of a bearing adapter on said railcar, each of said sensor units monitoring an operating parameter of said railcar wherein each of said sensor units comprises
>
> a sensor,
>
> a power source,
>
> a processor,
>
> memory,
>
> communications circuitry, and
>
> software, stored in said memory and executed by said processor, said software performing the functions of collecting data from said sensor at periodic intervals and calculating one or more numeric values based on the collected data, wherein the one or more numeric values represent a condition of a bearing; and
>
> b. a communication management unit, mounted on said railcar, said communication management unit in wireless communication with said one or more sensor units;
>
> wherein said communication management unit applies heuristics to analyze data collected from said one or more sensor units
>
> (a) to determine if an actual failure exists and

> (b) to predict potential or imminent failures based on a statistical analysis of said collected data by correlating one or more numeric values derived from the data to the condition of the bearing and determining a severity of the condition of the bearing;
>
> c. a land-based remote base unit, in wireless communication with said communication management unit, configured to: (i) receive data from said communication management unit; (ii) determine a severity of the condition of the bearing based on the data received from said communication management unit;
>
> (iii) determine an alarm condition based on the severity of the condition of the bearing, wherein said alarm condition comprises a recommended action with respect to the bearing.

RMTA Claim App. A, v–vi.

Proposed substitute independent claim 59 is intended to replace claim 23 and contains many of the same newly added limitations as proposed substitute claim 33. *Compare* RMTA Claims App. A, i–ii, *with id.* at xi–xii. Patent Owner and Petitioner both refer to claim 33 for the limitations of claim 59. *See* RMTA 20–21, RMTA Opp. 25. The remaining proposed substitute claims depend directly or indirectly from proposed substitute claims 34, 42, and 59. *See* RMTA App. A, iii–xii. In particular, claims 35–41 depend from claim 34. Claims 43–58 depend, directly and indirectly from claim 42. Claims 60 and 61 depend from claim 59.

Because we have only found claims 1, 5–18, 20, 21, 22, 24, 30, and 31 unpatentable above, we only address proposed substitute claims 33, 42–58, and 60, which correspond to those claims.

C. Statutory and Regulatory Requirements

1. Reasonable number of substitute claims

A motion to amend must "propose a reasonable number of substitute claims." 35 U.S.C. § 316(d)(1)(B); *see also* 37 C.F.R. § 42.121(a)(3) ("A motion to amend may cancel a challenged claim or propose a reasonable number of substitute claims."). "There is a rebuttable presumption that a reasonable number of substitute claims per challenged claim is one (1) substitute claim." *Lectrosonics*, Paper 15 at 4; *see also* 37 C.F.R. § 42.121(a)(3). Patent Owner proposes no more than one substitute claim for each challenged claim. RMTA 2, Claims App. A. Petitioner does not contend that Patent Owner proposes more than a reasonable number of substitute claims. *See generally* RMTA Opp. We determine that Patent Owner proposes a reasonable number of substitute claims.

2. Responsive to ground of unpatentability

"A motion to amend may be denied where . . . [t]he amendment does not respond to a ground of unpatentability involved in the trial." 37 C.F.R. § 42.121(a)(2)(i). The Petition asserts that challenged claims 1–10, 13–18, and 20–32 are unpatentable over prior art. As shown above, through the Revised Motion to Amend, Patent Owner has sought to change the substantive features of the challenged claims by substituting new claims. "A revised MTA includes one or more new proposed substitute claims in place of previously presented substitute claims, and may provide new arguments and/or evidence as to why the revised MTA meets statutory and regulatory requirements for an MTA." 84 Fed. Reg. 9501. At least one amendment presented is responsive to a ground of unpatentability, in that Patent Owner seeks to add limitations such that no prior art relied on by Petitioner,

"anticipates or renders obvious proposed substitute claims 33 through 61" and asserts that the substitute claims "include additional limitations not taught by LeFebvre, Armitage, or Barone." *See* RMTA 1, 22–25. Petitioner does not dispute this contention. *See generally* RMTA Opp.

Because the amendments attempt to distinguish over at least LeFebvre, Armitage, and Barone, we determine that the proposed amendments are responsive to a ground of unpatentability involved in this trial.

3. Does not enlarge the scope of the claims

An amendment may not enlarge the scope of the claims of the patent. 35 U.S.C. § 316(d)(3); 37 C.F.R. §§ 42.121(b)(1), 42.121(b)(2). Patent Owner asserts that the proposed substitute claims do not enlarge the scope of the challenged claims. RMTA 4. Petitioner does not contend that any proposed substitute claim enlarges the scope of any challenged patent claim. *See generally* RMTA Opp. We determine that each proposed substitute claim includes narrowing limitations and does not violate the statutory and regulatory prohibition of enlarging the scope of patent claims.

4. New matter

An amendment may not introduce new matter. 35 U.S.C. § 316(d)(3); 37 C.F.R. §§ 42.121(b)(1), 42.121(b)(2). New subject matter is any addition to the claims that lacks sufficient support in the subject patent's original disclosure. *See TurboCare Div. of Demag Delaval Turbomach. Corp. v. Gen. Elec. Co.*, 264 F.3d 1111, 1118 (Fed. Cir. 2001) ("When [an] applicant adds a claim . . . , the new claim[] must find support in the original specification."). Patent Owner also is required to show written description support in "the original disclosure of the patent for each claim that is . . .

amended," and in "an earlier-filed disclosure for each claim for which benefit of the filing date of the earlier filed disclosure is sought." 37 C.F.R. § 42.121(b).

According to Patent Owner, the original disclosure of "the '223 Patent supports each proposed substitute claim," and is entitled to priority to U.S. Patent App. 13/842,427, from which it issued, "which claims priority to U.S. Provisional App. No. 61/661,661, filed on June 19, 2012 ("the '661 Prov. Application"). RMTA 4 (citing Ex. 1013). Petitioner contends that claims 34–58 introduce new matter. *See* RMTA Opp. 1–7. Petitioner does not dispute claims 33 and 60 have written description support. *See* RMTA Opp. Having considered the original disclosure of the '223 patent and the disclosure in the priority applications, we find Patent Owner has sufficiently set forth adequate written description support for proposed substitute claims 33 and 60 and does not introduce new matter. *See* RMTA 6–7, 20–21. We agree with Petitioner that claims 42–58 introduce new matter.

Petitioner argues that several limitations are not "disclosed anywhere in the specification." RMTA Opp. 1. We address each of Petitioner's assertions in turn.

a. "mounted to a sidewall of a bearing adapter"

Claim 42 recites "one or more sensor units mounted to a sidewall of a bearing adapter on said railcar." RMTA Claims App. A at v. Petitioner asserts that Patent Owner relies on the location of a temperature sensor to support this limitation, but the claim is not limited to a temperature sensor, and claims "any type of sensor" that is "mounted [specifically] on the sidewall of a bearing adapter." RMTA Opp. 1–3. Patent Owner replies, and

we agree that the ’223 patent explicitly discloses “an adapter mounted sensor unit and the sidewall is an adapter mounting location.” RMTA Reply 3.

The parties agree that the ’223 patent describes temperature sensing mote 10 mounted to bearing adapter 12. *See* RMTA 10–11; Opp. RMTA 2–4. Temperature sensing mote 10 includes temperature sensor 20a thermally coupled to thermal transfer brass plug 22 that extends through housing 14 to be in thermal communication with bearing adapter 12. *Id.* at 4:26–39, 5:30–40. Alternatively, temperature sensors are mounted on railcar body 38 and tank car 38 to measure ambient and liquid temperatures at those locations. *See id.* at 5:40–55, 6:39–64, Figs. 4, 5B.

The ’223 patent indicates that “[s]ensor 20 can be any type of sensor, including for example, a temperature sensor, a pressure sensor, a load cell, a strain gauge, a hall effect sensor, a vibration sensor, an accelerometer, a gyroscope, a displacement sensor, an inductive sensor, a piezo resistive microphone or an ultrasonic sensor.” Ex. 1001, 4:51–56. The ’223 patent explains that “one of ordinary skill would recognize, the configuration of the motes 10 with respect to the sensor 20 is dependent upon the type of sensor and the type of data desired.” *Id.* at 4:30–47. Sensor configurations depend on the type of sensor and the data measured. *See* Tr. 13:22–15:19.

Patent Owner provides no evidence that a skilled artisan would mount an accelerometer “on a sidewall of a bearing adapter” to measure a condition of a bearing proximate to the bearing adapter just because a temperature sensor is mounted there in some embodiments to place heat transfer element 22 in thermal communication with the bearing adapter sidewall. We have no evidence that mounting a temperature sensor to a bearing adapter sidewall to measure temperatures describes mounting accelerometers there to measure

various forces and loads rather than bearing temperatures. Dr. Shamos's testimony that the Specification discloses the temperature sensor mounted on the sidewall of the bearing adapter and that the sensor can be any type of sensor does not address this point. *See* Ex. 2171 ¶¶ 13–15; Ex. 2172 ¶¶ 14–15. We find this testimony entitled to little weight given the Specification's express disclosure that the configuration of the sensor depends on the type of data being collected.

Mr. Ricca testifies that a skilled artisan would understand that strain gauges, gyroscopes, reed switches, and limit switches would not work if they are mounted on a bearing adapter sidewall. Ex. 1035 ¶ 18. We agree with Petitioner that LeFebvre (Ex. 1005) teaches to mount temperature and load sensors to "the upper rectangular surface of the bearing adapter." RMTA Opp. 3 (citing Ex. 1005 ¶ 20). LeFebvre discloses sensor pads 16 mounted to a top surface of bearing adapter 4 to measure dynamic and static vertical loads and shear or lateral forces on bearings, axles, and railcars. Ex. 1005 ¶¶ 19, 20, 33, Fig. 4; Tr. 13:2–15:23.

The portions of the '223 patent cited by Patent Owner do not address this issue either. RMTA Reply 3. The first citation explains that a skilled artisan would recognize that the configuration of motes depends upon the type of sensor and type of data desired for the different sensors listed there. Ex. 1001, 4:39–48. Other portions describe circuitry 26 of temperature sensor mote 10. *Id.* at 4:66–5:7, 5:11–23. Other citations emphasize that the temperature sensing mote is attached to ensure good heat transfer to it. *Id.* at 5:30–46. The '223 patent indicates that the temperature sensor is calibrated so the temperature reading of the bearing adapter is indicative of the bearing temperature. *Id.* at 5:46–55. These portions do not describe placing other

sensors such as accelerometers on a sidewall of a bearing adapter as recited in claim 42. *Ariad Pharma, Inc. v. Eli Lilly and Co.*, 598 F.3d 1336, 1352 (Fed. Cir. 2010) (explaining that a description that merely renders a claimed invention obvious does not satisfy the written description requirement).

Based on the parties' contentions and evidence, we find that Patent Owner has not shown that there is sufficient written description of "one or more sensor units mounted to a sidewall of a bearing adapter on said railcar" as recited in substitute claim 42.

b. "one or more numeric values based on the collected data" (claim 42)

Proposed substitute claim 42 recites, "calculating one or more numeric values based on the collected data, wherein the one or more numeric values represent a condition of a bearing." RMTA Claims App. A at v.

Petitioner takes issue with these limitations, because the "general concept of 'numeric values' [] is not disclosed in the application." RMTA Opp. 5.

We agree with Patent Owner's expert that an ordinary artisan "would understand that both FFTs and kurtosis (as well as statistical models) involve the calculation of numeric values derived from the data received from the sensors." RMTA Reply 5 (citing Ex. 2171 ¶ 16). The '223 patent discloses that "[d]ata collected from motes 10 may be sent to base station 44 for analysis and further action," and that data "transmitted to the base station 42, 44" includes "[a]n Above Ambient Condition event [that] occurs when any bearing temperature exceeds the value reported from the Ambient Temperature Node by a specified constant." Ex. 1001, 11:39–40, 12:46–56;

see also RMTA 9. Based on the disclosure in the '223 patent and the assertions of Patent Owner's expert, an ordinary artisan would understand that exceeding "bearing temperature" is a condition of the bearing, and that the value reported is a numeric value.

c. "land-based remote unit" (claim 42)

Claim 42 recites "a land-based remote base unit, in wireless communication with said communication management unit, configured to: (i) receive data from said communication management unit; (ii) determine a severity of the condition of the bearing based on the data received from said communication management unit." RMTA, Claims App. A at vi. According to Petitioner, the other limitations of claim 42 require that both the communication management unit (CMU) and the land-based remote station (or unit) perform analysis whereas the '223 patent discloses that either, but not both perform analysis. RMTA Opp. 5–6.

We agree with Patent Owner that the '223 patent discloses that both can be used to perform analysis. RMTA Reply 6. In particular, the '223 patent discloses that "either station 42, 44 [land-based station] may utilize train-wide heuristics to predict train-wide failures, or to spot train-wide trends, which a single CMU 32 may be unable to do with data from only a single railcar 38." Ex. 1001, 11:39–45; RMTA Reply 6. Based on this disclosure, an ordinary artisan would understand that CMU 32 is performing heuristics on a single railcar (*see* Ex. 1001, 2:58–60 ("The CMU is capable of wirelessly collecting data from each of the motes and performing higher-level analysis of the data to detect imminent or actual failures.")), whereas land-based station performs analysis train-wide. Given that the analyses are

not mutually exclusive, an ordinary artisan would understand that both are being performed. *See* Ex. 1001, 16:27–17:45 (original claim 5 and 13–17).

d. Summary

For the above reasons, we determine that Patent Owner has not shown that proposed substitute claim 42 meets the statutory and regulatory requirements set forth in 35 U.S.C. § 316(d) and 37 C.F.R. § 42.121.

e. "a vibration sensor or accelerometer configured to sample dynamic vibration data" (claim 45)[19]

Patent Owner relies on the "Table at col. 9" of the '223 patent to support this limitation. RMTA 16. There, the '223 patent discloses "[a]n adapter mounted accelerometer." Patent Owner contends that an ordinary artisan "would understand from the disclosure that a vibration or accelerometer sensor *could* be placed on the side wall, as shown in Figure 3 and 3A." RMTA Reply 7 (citing Ex. 2164 ¶¶ 19–20; *id.* at 2–5)(emphasis added).

We find that Patent Owner has not shown by a preponderance of the evidence that the original disclosure supports this claimed subject matter. To provide written description support, the originally filed specification "must do more than merely disclose that which would render the claimed invention obvious." *ICU Med., Inc. v. Alaris Med. Sys., Inc.*, 558 F.3d 1368, 1377 (Fed. Cir. 2009). That an accelerometer *could* be placed on the sidewall is insufficient, as opposed to the sidewall being the only practical only viable place. Patent Owner has the burden to show that a particular

[19] Proposed substitute claim 46 depends from claim 45 and thus also includes this limitation. RMTA, Claims App. A at vii; *see also* RMTA Opp. 6–7.

sensor, i.e., an accelerometer, necessarily would be placed on the sidewall. In addition, a "written description sufficient to satisfy the requirement of the law requires a statement of an invention, not an invitation to go on a hunting expedition to patch together after the fact a synthetic definition of an invention." *Indivior UK Ltd. v. Dr. Reddy's Labs. S.A.*, 18 F.4th 1323, 1329 (Fed. Cir. 2021) (quoting *Brenner v. Manson*, 383 U.S. 519, 536 (1966)). "[A] patent is not a hunting license. It is not a reward for the search, but compensation for its successful conclusion." *Id.* Patent Owner has not explained how a description of temperature sensing mote 10 mounted to a sidewall of bearing adapter 12 of a railcar wheel in Figures 3 and 3A together with a description of an accelerometer mounted on a bearing adapter provides a description of an accelerometer sensing unit "mounted on a sidewall of a bearing adapter" in limitation 45. We have no evidence that an accelerometer would be placed in the same location that is used to sense the temperature of a bearing. The '223 patent suggests otherwise by disclosing that the configuration of sensing motes depends on the type of sensor and the type of data desired. Ex. 1001, 4:39–42.

For the above reasons, we determine that Patent Owner has not shown that proposed substitute claims 45 and 46 meet the statutory and regulatory requirements set forth in 35 U.S.C. § 316(d) and 37 C.F.R. § 42.121.

f. Summary as to Claims 33, 42–58, and 60[20]

Accordingly, Patent Owner has shown that proposed substitute claims 33 and 60 meet the statutory and regulatory requirements set forth in

[20] We decline to address Petitioner's arguments regarding claim 48 (RMTA Opp. 7) because we have already found claim 48 fails to meet the statutory requirements based on its dependency from claim 42.

35 U.S.C. § 316(d) and 37 C.F.R. § 42.121, but has not shown that proposed substitute claims 42–58 meet the statutory and regulatory requirements set forth in 35 U.S.C. § 316(d) and 37 C.F.R. § 42.121.

D. Petitioner's Assertions of Unpatentability

Petitioner contends that the proposed substitute claims are unpatentable for the following reasons:

Claim(s) Challenged	35 U.S.C. §	Reference(s)/Basis
42–58	112(a)	Written Description
42–58	112(b)	Indefiniteness
42–58	112(a)	Enablement
42–58	103(a)	Armitage, LeFebvre, Barone, Moretti[21], Brandmeier[22]
42–58	103(a)	LeFebvre Armitage, Barone, Moretti, Brandmeier
33, 60	103(a)	Armitage, LeFebvre, Denny, Provasnik, Culbertson[23]
33, 60	103(a)	LeFebvre, Denny, Provasnik, Culbertson

RMTA Opp. 7–25.

We address the written description, enablement, and indefiniteness grounds before turning to the obviousness grounds.

[21] U.S. Patent No. 6,672,681 B1, issued Jan. 6, 2004, filed Feb. 29, 2000 (Ex. 1028, "Moretti").

[22] U.S. Patent Publication No. 2008/0072670 A1, pub. Mar. 27, 2008, filed July 16, 2005 (Ex. 1031, "Brandmeier").

[23] U.S. Patent No. 7,665,890 B2, issued Feb. 23, 2010, filed June 22, 2007 (Ex. 1032, "Culbertson").

1. Written Description

On this record, we find that Patent Owner has not shown by a preponderance of the evidence that the original disclosure of the '223 patent provides sufficient written description support for the added limitations as recited in proposed substitute claims 42–58 for the reasons previously described in Section V.C.

2. Enablement

a. Claim 42

Petitioner asserts that the claim 42 limitations, "correlating one or more numeric values derived from the data to the condition of the bearing" and "determining a severity of the condition of the bearing" are not enabled because it took "a team of academic researchers at UTRGV worked diligently for several years to develop a set of temperature correlations," but the "temperature correlations are not disclosed." RMTA Opp. 8–9. Petitioner also asserts that whereas the specification discloses monitoring temperature, claim 42 encompasses "any possible characteristic" and does not enable "the full scope of this claim." RMTA Opp. 9 (emphasis omitted). Petitioner specifically asserts that the '223 patent does not enable "monitoring acceleration." *Id.* (emphasis omitted).

We are not persuaded that those skilled in the art would have been unable to make and use the claimed invention. As Patent Owner notes, the Table spanning columns 7–12 of the '223 patent "discloses numerous heuristics that [an ordinary artisan] would be able to implement without undue experimentation, including temperature and vibration." RMTA Reply 9–10. Petitioner does not show that implementing these embodiments would require anything other than routine experimentation.

As discussed above, the Table spanning columns 7–12 of the '223 patent discloses various embodiments. An example is an accelerometer that "is mounted on an adapter or other truck component to sample dynamic data. A Probability Density Function and Kurtosis can be computed from the data. High Kurtosis, or impulsivity, will indicate track defects." Ex. 1001, cols. 9–10. Petitioner does not show that implementing this embodiment would require other than routine experimentation.

For the above reasons, we determine that Petitioner has not shown that the proposed substitute claims are not enabled.

3. Indefiniteness

a. "numeric values derived from the data"

Petitioner refers to its written description discussion of this limitation in claim 42, and asserts that "this term is not used in the specification, and it is unclear how it relates to the disclosed embodiments." RMTA Opp. 7 (citing Ex. 1030 ¶ 28).

The '223 patent discloses that "CMU 32 is capable of performing advanced data analysis, using data collected from multiple motes 10, and may apply heuristics to draw conclusions based on the analysis." Ex. 1001, 8:5–7. Based on this disclosure of using data to draw conclusions, we agree with Patent Owner that Petitioner fails to explain why an ordinary artisan "would not understand with reasonable certainty what is meant by these claim terms." RMTA Reply 8.

For the above reasons, we determine that Petitioner has not shown that the proposed substitute claims are indefinite.

4. Asserted Obviousness of Claims 42–58 Based on Armitage, LeFebvre, Barone, Moretti, and Brandmeier

Petitioner asserts that Patent Owner's proposed substitute claims include limitations that "were known in the art." RMTA Opp. 11. We first provide a brief overview of Moretti and Brandmeier before we address Petitioner's contentions.[24]

a. Moretti (Ex. 1028)

Moretti, titled "Railway Axle Hub Unit," relates to "axle box housing for supporting a bearing." Ex. 1028, 1:7–8, Code (54). In an embodiment of Moretti, sensor carrier body equipped with two vibration sensors oriented in different directions. *Id.* at 2:64–65. An exemplary sensor is depicted in Figure 3, reproduced below.

[24] We found above that Patent Owner met its burden of production in showing that Armitage was not prior art to the challenged claims. However, Patent Owner has made no such showing with respect to the Amended Claims. *See Parus Holdings, Inc. v. Google LLC*, 70 F.4th 1365, 1371 (Fed. Cir. 2023) ("However, when a patent owner attempts to antedate an asserted prior art reference, the patent owner assumes a temporary burden of production.").

FIG. 3

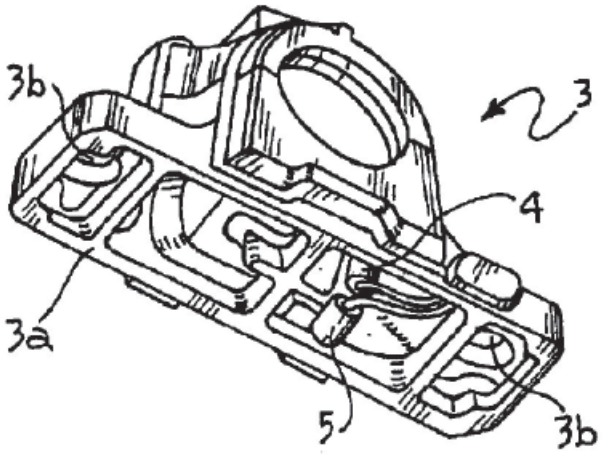

Figure 3 is a perspective view, to an enlarged scale, of a sensor carrier body equipped with two vibration sensors oriented in different directions. Ex. 1028, 2:63–65. Sensor body 3 is positioned on a sealing insert "at a position vertically aligned with the axis of rotation of the bearing, where the vibrations are more intense." *Id.* at 3:22–25. Sensor body 3 contains a bi-directional accelerometer device having "first accelerometer 4 oriented in the vertical direction and second accelerometer 5 oriented in the horizontal axial direction." *Id.* at 3:16–20. Moretti explains that "accelerometer 4 detects vertical vibrations which the bearing/wheel assembly is subjected to," and "accelerometer 5 serves to detect horizontal vibrations provoked by the wheel rim hitting against the rail as the vehicle oscillates along the track." *Id.* at 3:37–41.

b. Brandmeier (Ex. 1031)

Brandmeier is titled "Sensor for Motor Vehicles" and relates to "a sensor for a motor vehicle, which is designed to be fastened on a mounting

surface." Ex. 1031 ¶ 1, Code (54). An exemplary sensor is depicted within a housing as seen in Figure 1, reproduced below.

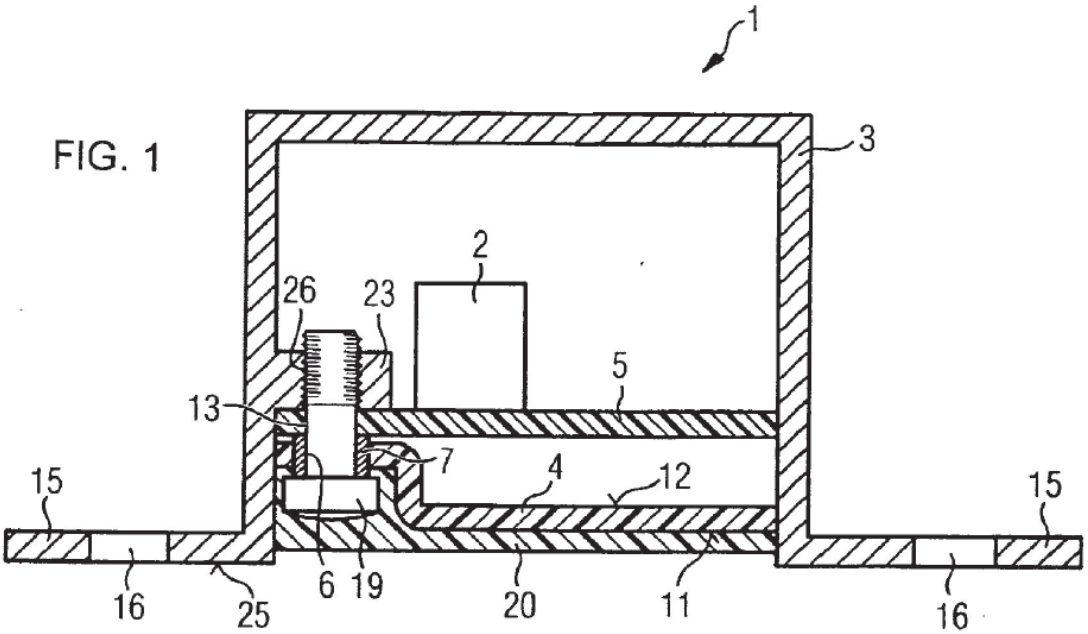

Figure 1 shows electrical device 1 in a cutaway view. Ex. 1031 ¶ 21. Device 1 includes "housing jacket 3 made from a rigid material" and "sensor 2 that detects the structure-borne sound waves is fastened on a support plate 5 arranged inside the housing." *Id.* ¶¶ 27–28. According to Brandmeier, by connecting housing jacket 3 to the mounting surface of a component and selecting "the most rigid material possible for the housing jacket ensure that structure-borne sound waves propagating in the mounting surface are transmitted in almost completely undistorted form to the housing jacket 3 of the electrical device 1." *Id.* ¶ 28.

c. Claim 42

Petitioner asserts that claim 42 includes the following new limitations:

42(a) "mounted to a sidewall of a bearing adapter"

> 42(g) "calculating one or more numeric values based on the collected data, wherein the one or more numeric values represent a condition of a bearing,"
>
> 42(k) "by correlating one or more numeric values derived from the data to the condition of the bearing and determining a severity of the condition of the bearing," and
>
> 42(l) "c. a land-based remote base unit, in wireless communication with said communication management unit, configured to: (i) receive data from said communication management unit; (ii) determine a severity of the condition of the bearing based on the data received from said communication management unit; (iii) determine an alarm condition based on the severity of the condition of the bearing, wherein said alarm condition comprises a recommended action with respect to the bearing."

RMTA Opp. 19.

With respect to limitation 42(a), according to Petitioner, the combined teachings of Armitage and Barone meet these limitations, because "Barone discloses a sensor node mounted on the sidewall of a bearing adapter as required by the substitute claims." *Id.* (citing Ex. 1007 ¶¶ 289–293, Figs. 11–13). Petitioner asserts that an ordinary artisan "would have been motivated to mount a sensor node on the sidewall of a bearing adapter because it is an easily accessible, non-rotating surface that transmits heat and vibrations emanating from the bearing." *Id.* at 12–13 (citing Ex. 1035 ¶ 47).

Having considered Patent Owner's contrary assertions, Petitioner has shown by a preponderance of the evidence that limitations 42(a) of proposed substitute claim 42 are disclosed by the combination of Armitage, LeFebvre, Barone, Moretti, and Brandmeier. Petitioner has also shown that an ordinary artisan would have had a reason to modify Armitage and would have had a reasonable expectation of success in making the modification.

Patent Owner relies on its arguments as to Armitage, LeFebvre, and Barone, set forth in the Patent Owner Response, which we find unavailing as discussed above.[25] RMTA Reply 10–11 (citing PO Resp. 4–24, 52–64).

Patent Owner replies that Petitioner "fails to explain how Brandmeier, which is directed to a sensor for a motor vehicle, is analogous art when it is from a different field." RMTA Reply 11 (citing *Airbus S.A.A. v. Firepass Corp.*, 941 F.3d 1374, 1382 (Fed. Cir. 2019) (requiring evidence that a POSITA "would reasonably have consulted those references and applied their teachings in seeking a solution to the problem"); Ex. 2172 ¶ 26). According to Patent Owner, "Brandmeier is not reasonably pertinent because it utilizes a structure-borne noise sensor in a two-piece housing (jacket and cover) in a car engine to trigger a passenger protection system." *Id.* (citing Ex. 1031 ¶¶ 2, 3, 27).

Patent Owner further contends that Petitioner's combination is based on hindsight because whereas railcars are in a "demanding environment" subject to monitoring which cars "can damage the track infrastructure and lead to derailments," Petitioner provides no explanation for considering Brandmeier's internal car sensor housing "for a railcar bearing adapter sensor housing that needs to be resistant to environmental damage and withstand the railway's 'demanding environment.'" *Id.* at 12 (citing Ex. 1001, 1:26–29, 1:39–44, 2:36–44, 4:14–19; Ex. 2172 ¶ 27).

---

[25] Patent Owner has not attempted to show an earlier priority date for the amended claims. So, we find that Petitioner has shown that Armitage is prior art to the amended claims. We considered Patent Owner's arguments regarding the independent claims with respect to Armitage above in our analysis of claims 1, 13–17, and 24.

Although we appreciate that Brandmeier's housing is not subject to the external environment, the '223 patent discloses that environmental factors include "vibration" and "mechanical impact." Ex. 1001, 4:14–19. Given that Brandmeier is protecting the sensor from the same environmental factors, Brandmeier is reasonably pertinent. Likewise, based on the similarities in what the housing is protecting the sensor from, Petitioner's reasoning "to construct the housing of Armitage's sensor device from a rigid, durable material in order to protect the components within," provides a sufficient reason to modify Armitage. *See* RMTA Opp. 14 (citing Ex. 1035 ¶ 51).

Petitioner asserts that limitations 42(g), 42(k), and 42(l) add several new limitations, including, "calculating one or more numeric values based on the collected data, where the one or more numeric values represent a condition of a bearing," "correlating one or more numeric values derived from the data to the condition of the bearing," a "land-based remote station," "determine a severity of the condition of the bearing," and "determine an alarm condition based on the severity of the condition of the bearing, wherein said alarm condition comprises one or more recommended actions to be taken with respect to the bearing." RMTA Opp. 14–18. According to Petitioner, Armitage discloses most of these limitations, and what Armitage does not disclose, Barone does. *Id.*

Patent Owner again relies on its Patent Owner Response, and asserts that "Petitioner's obviousness arguments also fail." RMTA 10–11 (citing POR 4–24, 52–64). We disagree.

As to the recited "remote station," we agree with Petitioner that a "rail-side" device would be remote from the rail car in order to "receive[]

information from control node 330 over a RFID wireless link," as "railway car 310 passes by." Ex. 1006 ¶ 39; *see also* RMTA Opp. 14.

As to the recited "calculating numeric values based on collected data at the sensor node," we are persuaded by Petitioner's assertion that Armitage discloses calculating numeric values based on collected data at the sensor node. RMTA Opp. 19; Ex. 1006 ¶¶ 14, 53, Figs. 3, 6; Ex. 1003 ¶¶ 263, 264, 287, 288.

As to the recited "correlate one or more numeric values derived from the data to the condition of the bearing," we are persuaded by Petitioner's assertion that "Armitage performs calculations on collected data that result in 'numeric values' which represent the operational state of the bearing." RMTA Opp. 15 (citing Ex. 1006 ¶¶ 29, 30 (using "moving average and trend analysis" to detect "statistically significant deviations"), ¶ 45 (calculating averages, minimums, and maximums); Ex. 1035 ¶ 54).

As to the limitations "determine a severity of the condition of the bearing," and "determine an alarm condition based on the severity of the condition of the bearing, wherein said alarm condition comprises one or more recommended actions to be taken with respect to the bearing," we agree with Petitioner that Armitage "uses a color-coded system to indicate the severity of a detected problem condition." RMTA Opp. 16 (citing Ex. 1006 ¶ 44). Armitage discloses that events are "ranked by severity" and "include a 'yellow' condition which indicates that a railway car requires service, and a 'red' condition which indicates that a sensor has detected a serious deviation from normal operations that requires immediate service." Ex. 1006 ¶ 44. We also agree with Petitioner that "Armitage describes a 'railway car health scorecard,' which recommends a course of action based

on the level of the alarm that is raised." RMTA Opp. 18 (citing Ex. 1006 ¶ 44; Ex. 1003 ¶ 280). Armitage discloses that "railway car components can be monitored" and "[a] railway car health 'scorecard' could be provided to a user." Ex. 1006 ¶ 44. To the extent that Armitage's email or text to the user is not considered an alarm, Barone discloses that upon detection of an abnormal condition, the system "generates an appropriate alarm or indication to prompt a human user to take remedial action." Ex. 1007 ¶ 191; RMTA Opp. 18.

d. Claims 43–58

Substitute claims 43–58 depend from claim 42. RMTA, Claims App. A, vi–xi. Petitioner asserts that the subject matter of claims 43–58 would have been obvious over Armitage, LeFebvre, Barone, Moretti, and Brandmeier because these claims "correspond to original claims 6–10, 13–18, 20–22, and 31–32 respectively." RMTA Opp. 19–20. Patent Owner does not raise any arguments specifically directed to claims 43–58 aside from the arguments Patent Owner directs to claim 42. *See generally* RMTA Reply. Patent Owner raised no specific arguments, aside from those raised with respect to claim 5, regarding claims 6–10, 13–18, 20–22, and 31–32. To the extent those arguments are the same as those we already considered and rejected with respect to the original claims, we do not find them persuasive. Thus, for the same reasons explained above in our discussion of claim 42 and original claims 13–17, we determine that Petitioner has shown by a preponderance of the evidence that the combination of Armitage, LeFebvre, Barone, Moretti, and Brandmeier teaches each limitation of claims 43–58. We adopt Petitioner's arguments and cited evidence as to

these claims and limitations as our own determination and basis. *See* RMTA Opp. 19–20.

5. Asserted Obviousness of Claims 42–58 Based on LeFebvre, Armitage, Barone, Moretti, and Brandmeier

Petitioner asserts that the subject matter of claims 42–58 would have been obvious over LeFebvre, Armitage, Barone, Moretti, and Brandmeier and provides a detailed analysis of each of these claims with argument and evidence in support thereof. RMTA Opp. 10–20. Patent Owner does not raise any arguments specifically directed to the combination of LeFebvre, Armitage, Barone, Moretti, and Brandmeier, and only addresses these claims based on arguments set forth in the Patent Owner Response, with additional assertions against Moretti and Brandmeier. RMTA 10–12. Because Petitioner relies on LeFebvre for the same disclosure as that of Armitage and uses similar reasoning to make the modification, for the same reasons explained above in our discussion of claim 42 as to Armitage, LeFebvre, Barone, Moretti, and Brandmeier, we determine that Petitioner has shown by a preponderance of the evidence that the combination of LeFebvre, Armitage, Barone, Moretti, and Brandmeier teaches each limitation of claims 42–58. We adopt Petitioner's arguments and cited evidence as to these claims and limitations as our own determination and basis. *See* RMTA Opp. 10–20.

6. Asserted Obviousness of Claims 33 and 59–61 Based on Armitage LeFebvre, Denny, Provasnik, and Culbertson

Claims 33 and 59 are independent and claims 60 and 61 depend from claim 59. RMTA, Claims App. A, i–ii, xi–xii.

Petitioner asserts that "[t]he cited references, in view of the general knowledge possessed by a PHOSITA, [] render obvious every element of claim 33." RMTA Opp. 24. We first provide a brief overview of Culbertson before we address Petitioner's contentions.

a. Culbertson

Culbertson is titled "Temperature Sensor Assembly and Method of Manufacturing Thereof," and relates to "temperature sensor assemblies having one or more temperature sensors and the method of manufacturing such temperature sensor assemblies." Ex. 1032, 1:14–17, Code (54). An exemplary temperature sensor assembly is depicted in Figure 1, reproduced below.

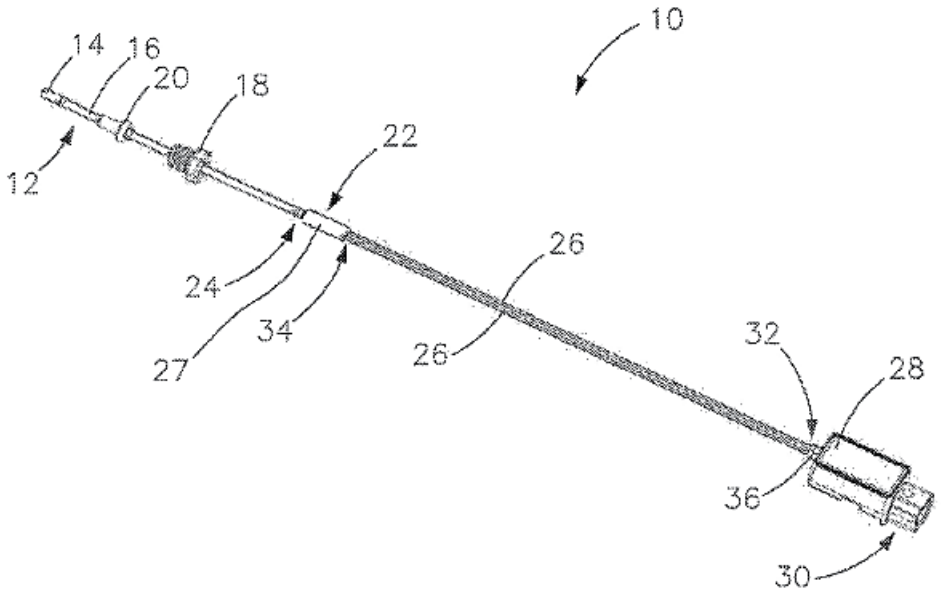

FIG. 1

Figure 1 is a perspective view of a temperature sensor assembly having a single temperature probe. Ex. 1032, 3:19–20. Temperature sensor assembly 10 includes temperature probe 12 having tip cap 14 at one end of probe body 16, and mounting connector 18 is secured to probe body 16. *Id.* at 4:15–19. Mounting connector 18 is adapted for securing temperature probe 12 to a mounting assembly in an operating environment, and includes a hanger, "a nut, flange, rotatable connector, or other device." *Id.* at 4:46–50. Components of the probe are depicted in Figure 5, reproduced below.

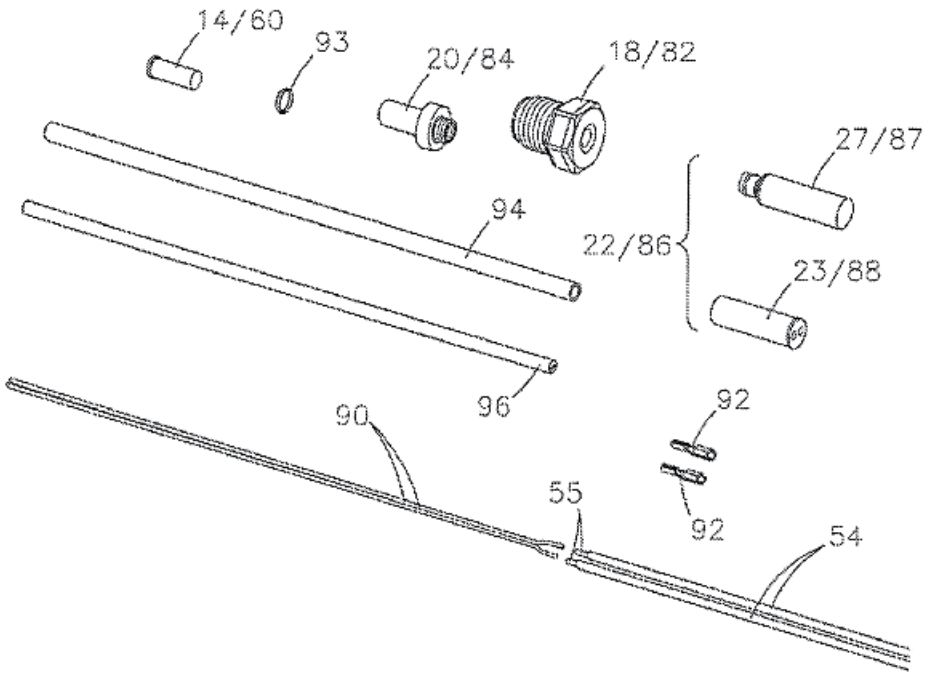

FIG. 5

Figure 5 "is an exploded perspective view of various components, also referred to as a 'kit,' for assembly of a temperature probe." Ex. 1032, 3:46–48. The 'kit' includes tube 94, mounting connector 18, and tip cap

14/60. *Id.* at 6:50–54. Culbertson explains that the probe includes tube 94. *Id.* at 7:49.

b. Claim 33

Petitioner asserts that an ordinary artisan "would have understood that a magnet could be used to attach Culbertson's temperature probe to a metallic substrate," because they "would have understood that placing a magnet inside probe body **16** (i.e., inside metal tube **94**) would allow the sensor probe head to sit flush against a metal surface to be measured." RMTA Opp. 24 (citing Ex. 1035 ¶ 89).

As set forth in our Preliminary Guidance, Petitioner has not adequately established that the addition of Culbertson is sufficient to show that Armitage, LeFebvre, Denny, Provasnik, and Culbertson render obvious claim 33. Paper 34, 18–19. As set forth above, Culbertson includes mounting connector 18 to secure temperature probe 12 to a mounting assembly in an operating environment. It is not apparent whether Petitioner proposes to replace connector 18 with a magnet, or include a magnet in conjunction with connector 18. If it is the latter, Petitioner's reasoning for the modification is flawed because having connector 18 would not "permit[] a sensor to be readily attached to, and removed from, a metallic substrate," in that connector 18 would need to be unscrewed or otherwise detached before the magnet could be removed. If it's the former, Petitioner does not sufficiently explain such a modification. In addition, given that Provasnik places a probe inside the magnet, Petitioner does not explain why it would have been obvious to place a magnet inside tube 94, i.e., inside the probe. Further Petitioner proposes to place the magnet at proximal end 24 (*see* RMTA 24 "placing a magnet within proximal end 24 of the probe body

16"), but it is not apparent how a magnet at this location would be configured to magnetically attract the part of the railcar against which the *sensor probe head* will be placed, as further recited. Based on these gaps and inconsistencies, Petitioner has not shown by a preponderance of the evidence that Armitage, LeFebvre, Denny, Provasnik, and Culbertson render obvious claim 33.

c. Claim 60

Petitioner asserts that "[t]he new limitations of claim 59 are substantially the same as the limitations of claim 33, and are obvious for the same reasons."[26] RMTA Opp. 25.

Independent claim 59 is broader than claim 33 because it does not require a magnet, but does include some similar limitations, which we address.

i. Limitation 59(b): "the temperature sensor positioned within a probe head and interfaced with an electrical connector, the probe head configured to receive a cable having a corresponding electrical connector"

Petitioner asserts that Culbertson includes, "temperature probe **12** (i.e., a sensor probe head)." RMTA Opp. 23. Petitioner, however, does not explain how Culbertson meets the sensor "within a probe head" limitation. That is, we understand limitation 59(b) to have two elements, a probe head and a sensor positioned within the probe head. Moreover, Culbertson's

[26] Although we did not find claim 23 unpatentable, we include an analysis of claim 59 because we did find claim 24 unpatentable, and Patent Owner offers a substitute claim for claim 24 (claim 60). Claim 60 depends from claim 59.

probe head 12 is not configured to receive a cable having a corresponding electrical connector. The connector upon which Petitioner relies appears to be connector 22 (*see* Opp. 23), which is spaced from probe head 12, as seen in Figure 1 of Culbertson. It is not apparent whether the entire probe body could be referred to as the probe head. Based on these gaps and inconsistencies, Petitioner has not shown by a preponderance of the evidence that Armitage, LeFebvre, Denny, Provasnik, and Culbertson render obvious claim 59. Claim 60 depends from claim 59. RMTA Claims App. A, xii. Because claim 60 includes all the limitations of claim 59, Petitioner has not shown by a preponderance of the evidence that Armitage, LeFebvre, Denny, Provasnik, and Culbertson render obvious claim 60.

7. Asserted Obviousness of Claims 33 and 59–61 Based on LeFebvre, Denny, Provasnik, and Culbertson

Petitioner relies on Culbertson in the same way as the challenge based on Armitage, LeFebvre, Denny, Provasnik, and Culbertson. RMTA Opp. 23–25. For the same reasons discussed above for the challenge based on Armitage, LeFebvre, Denny, Provasnik, and Culbertson, Petitioner has not shown by a preponderance of the evidence that LeFebvre, Denny, Provasnik, and Culbertson render obvious claim 59. Claims 60 depends from claim 59 and include all the limitations of claim 59, and for the same reasons as claim 59, Petitioner has not shown by a preponderance of the evidence that LeFebvre, Denny, Provasnik, and Culbertson render obvious claim 60.[27]

[27] Claim 61 is offered as a substitute for claim 25. We do not reach claim 61 because we did not find claim 25 unpatentable.

VI. SUMMARY

For the reasons discussed above, Petitioner *has demonstrated*, by a preponderance of the evidence, that claims 1, 5–10, 13–18, 20–22, 24, 31, and 32 of the '223 patent are unpatentable. Petitioner *has not demonstrated* that claims 2–4, 23, and 25–30 are unpatentable. Patent Owner's Motion to Exclude is dismissed as *moot*. Patent Owner's Motion to Amend is *granted-in-part and denied-in-part*.

Our conclusions regarding the Challenged Claims are summarized below:

Claims	**35 U.S.C. §**	**Reference(s)/Basis**	**Claims Shown Unpatentable**	**Claims Not Shown Unpatentable**
2–10, 18, 20, 21, 23, 25–32	103(a)	LeFebvre	5–10, 18, 20, 21, 31, 32	2–4, 23, 25–30
13–17, 22, 24	103(a)	LeFebvre, Barone	13–17, 22	24
1, 24	103(a)	LeFebvre, Denny, Provasnik		1, 24
2, 3, 26–28	103(a)	Armitage		2, 3, 26–28
4–10, 13–18, 20–23, 25, 29–32	103(a)	Armitage, LeFebvre	13–17	4–10, 18, 20–23, 25, 29–32
1, 24	103(a)	Armitage, LeFebvre, Denny, Provasnik	1, 24	
Overall Outcome			1, 5–10, 13–18, 20–22, 24, 31, 32	2–4, 23, 25–30

Motion to Amend Outcome	Claim
Original Claims Cancelled by Amendment	
Substitute Claims Proposed in the Amendment	33–61
Substitute Claim: Motion to Amend Granted	33, 60
Substitute Claim: Motion to Amend Denied	42–58
Substitute Claims: Not Reached	34–41, 59, 61

VII. ORDER

In consideration of the foregoing, it is:

ORDERED that Patent Owner's Motion to Exclude (Paper 44) is *dismissed as moot*;

FURTHER ORDERED that claims 1, 5–10, 13–18, 20–22, 24, 31, and 32 of U.S. Patent No. 9,365,223 B2 are determined to be unpatentable;

FURTHER ORDERED that Patent Owner's Revised Motion to Amend is *granted-in-part and denied-in-part*; and

FURTHER ORDERED that, because this a Final Written Decision, parties to this proceeding seeking judicial review of this Decision must comply with the notice and service requirements of 37 C.F.R. § 90.2.

For PETITIONER:

Eric Rakestraw
Andrea Shoffstall
Daisy Manning
HUSCH BLACKWELL LLP
ptab-erakestraw@huschblackwell.com
ptab-ashoffstall@huschblackwell.com
ptab-dmanning@huschblackwell.com

For PATENT OWNER:

Jeff Schwartz
P. Ticer
Ryan Miller
FOX ROTHSCHILD LLP
jeschwartz@foxrothschild.com
mticer@foxrothschild.com
rmiller@foxrothschild.com