US009981673B2

(12) **United States Patent**
Martin et al.

(10) **Patent No.: US 9,981,673 B2**
(45) **Date of Patent: May 29, 2018**

(54) **SYSTEM AND METHOD FOR MONITORING RAILCAR PERFORMANCE**

(71) Applicant: **Amsted Rail Company, Inc.**, Chicago, IL (US)

(72) Inventors: **Andrew H. Martin**, West Chester, PA (US); **William D. LeFebvre**, West Chester, PA (US); **Brent M. Wilson**, Edwardsville, IL (US)

(73) Assignee: **Amsted Rail Company, Inc.**, Chicago, IL (US)

(*) Notice: Subject to any disclaimer, the term of this patent is extended or adjusted under 35 U.S.C. 154(b) by 0 days. days.

(21) Appl. No.: **15/158,018**

(22) Filed: **May 18, 2016**

(65) **Prior Publication Data**

US 2017/0050651 A1 Feb. 23, 2017

Related U.S. Application Data

(63) Continuation of application No. 13/842,427, filed on Mar. 15, 2013, now Pat. No. 9,365,223, which is a (Continued)

(51) **Int. Cl.**

B61K 9/04	(2006.01)
B60T 13/66	(2006.01)
B60T 17/22	(2006.01)
B61L 15/00	(2006.01)
G01K 7/02	(2006.01)

(Continued)

(52) **U.S. Cl.**

CPC ..... ***B61K 9/04*** (2013.01); ***B60T 13/665*** (2013.01); ***B60T 17/221*** (2013.01); ***B60T 17/228*** (2013.01); ***B61H 13/02*** (2013.01); ***B61L 15/0018*** (2013.01); ***B61L 15/0027*** (2013.01); ***B61L 15/0081*** (2013.01); ***B61L 25/025*** (2013.01); ***B61L 27/0077*** (2013.01); (Continued)

(58) **Field of Classification Search**

CPC B61L 5/0027
USPC 701/19; 340/870.16
See application file for complete search history.

(56) **References Cited**

U.S. PATENT DOCUMENTS

3,718,040 A 2/1973 Freeman et al.
3,854,417 A 12/1974 MacDonnell et al.
(Continued)

FOREIGN PATENT DOCUMENTS

EP 1548419 A1 6/2005
EP 2650191 A1 10/2013
(Continued)

OTHER PUBLICATIONS

Topolev, V.P.; Automation of Strain-gauge Crane Scales; Feb. 1966; Translated from Izmeritel'naya Tekhnika, No. 2, pp. 81-82.
(Continued)

Primary Examiner — Yazan A Soofi
(74) *Attorney, Agent, or Firm* — Fox Rothschild LLP

(57) **ABSTRACT**

A system for monitoring operation of a railcar having one or more sensing units, mounted on the railcar, for monitoring operating parameters and or conditions of the railcar, and a communication management unit, in wireless communication with the sensing units, wherein the system can make a determination of an alarm condition based on data collected the sensing units. A temperature sensor device for use in such a system is also provided.

22 Claims, 6 Drawing Sheets

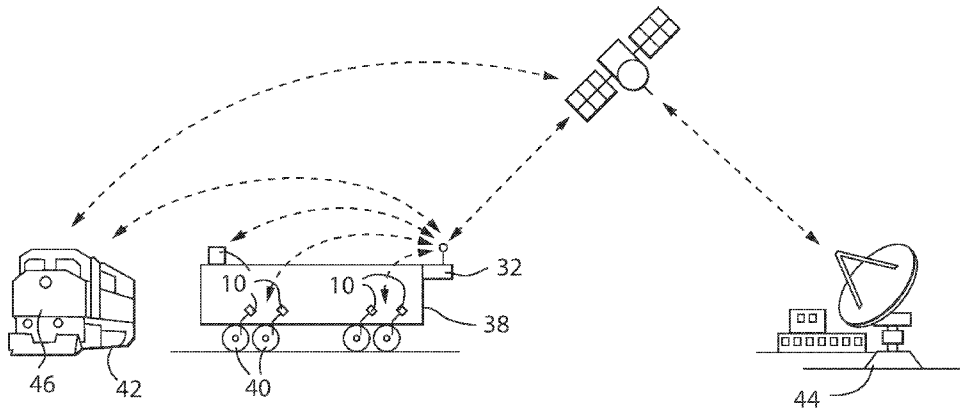

Related U.S. Application Data

continuation-in-part of application No. 12/861,713, filed on Aug. 23, 2010, now Pat. No. 9,026,281.

(60) Provisional application No. 61/661,661, filed on Jun. 19, 2012.

(51) **Int. Cl.**
B61H 13/02 (2006.01)
B61L 25/02 (2006.01)
B61L 27/00 (2006.01)

(52) **U.S. Cl.**
CPC ***B61L 27/0094*** (2013.01); ***G01K 7/023*** (2013.01); *B61L 2205/04* (2013.01)

(56) **References Cited**

U.S. PATENT DOCUMENTS

4,134,464	A	1/1979	Johnson et al.	
4,296,707	A	10/1981	Kennedy	
4,368,927	A	1/1983	Billingsley et al.	
4,801,288	A	1/1989	Schmitt et al.	
4,812,826	A	3/1989	Kaufman et al.	
4,905,795	A	3/1990	Rains	
5,038,605	A	8/1991	Tews et al.	
5,381,090	A	1/1995	Adler et al.	
5,394,137	A	2/1995	Orschek	
5,410,911	A	5/1995	Severinsson	
5,440,184	A	8/1995	Samy et al.	
5,446,451	A	8/1995	Grosskopf, Jr.	
5,503,030	A	4/1996	Bankestrom	
5,603,556	A	2/1997	Klink	
5,682,139	A	10/1997	Pradeep et al.	
5,691,980	A	11/1997	Welles, II et al.	
5,701,974	A	12/1997	Kanjo et al.	
5,810,485	A	9/1998	Dublin, Jr. et al.	
6,006,868	A	12/1999	Klink	
6,014,600	A	1/2000	Ferri et al.	
6,161,962	A	12/2000	French et al.	
6,170,619	B1	1/2001	Sheriff et al.	
6,175,784	B1	1/2001	Jicha et al.	
6,179,471	B1	1/2001	Moretti et al.	
6,184,798	B1	2/2001	Egri	
6,237,722	B1	5/2001	Hammond et al.	
6,301,531	B1	10/2001	Pierro et al.	
6,324,899	B1	12/2001	Discenzo	
6,339,397	B1 *	1/2002	Baker	B61L 25/021 342/357.64
6,397,978	B1	6/2002	Jackson et al.	
6,441,324	B1	8/2002	Stimpson	
6,474,450	B1	11/2002	Ring et al.	
6,474,451	B1	11/2002	O'Brien, Jr.	
6,487,478	B1	11/2002	Azzaro et al.	
6,535,135	B1	3/2003	French et al.	
6,668,216	B2	12/2003	Mays	
6,739,675	B1	5/2004	Scharpf et al.	
6,823,242	B1	11/2004	Ralph	
7,114,596	B2	10/2006	Borugian	
7,180,019	B1	2/2007	Chiou et al.	
RE40,099	E	2/2008	Stephens et al.	
7,336,156	B2	2/2008	Arita et al.	
7,688,218	B2	3/2010	LeFebvre et al.	
7,698,962	B2	4/2010	LeFebvre et al.	
8,033,236	B2	10/2011	Michel et al.	
8,060,264	B2	11/2011	Oestermeyer et al.	
8,212,685	B2	7/2012	LeFebvre et al.	
8,244,411	B2	8/2012	Baker	
8,370,006	B2	2/2013	Kumar et al.	
8,672,273	B2	3/2014	Brown et al.	
8,751,290	B2	6/2014	Schullian et al.	
2002/0017439	A1	2/2002	Hill et al.	
2002/0111726	A1	8/2002	Dougherty et al.	
2003/0058091	A1	3/2003	Petersen et al.	
2003/0097885	A1	5/2003	Kell	
2005/0259619	A1	11/2005	Boettle et al.	
2006/0264221	A1	11/2006	Koike et al.	
2007/0062765	A1	3/2007	Michel et al.	
2007/0084676	A1	4/2007	Vithani et al.	
2007/0151812	A1	7/2007	Michel et al.	
2007/0241610	A1	10/2007	Smith	
2008/0179269	A1	7/2008	Bachman	
2008/0195265	A1 *	8/2008	Searle	B61K 9/04 701/19
2008/0252515	A1	10/2008	Oestermeyer et al.	
2009/0001226	A1	1/2009	Haygood	
2009/0173840	A1	7/2009	Brown et al.	
2010/0200307	A1	8/2010	Toms	
2011/0270475	A1	11/2011	Brand et al.	
2011/0282540	A1	11/2011	Armitage et al.	
2012/0037435	A1	2/2012	Duehring	
2012/0046811	A1	2/2012	Murphy et al.	
2012/0051643	A1	3/2012	Ha et al.	
2013/0342362	A1 *	12/2013	Martin	B61L 15/0027 340/870.16
2015/0083869	A1	3/2015	LeFebvre et al.	

FOREIGN PATENT DOCUMENTS

GB	2295207	A	5/1996
JP	05213195	A	8/1993
JP	05343294		12/1993
JP	0815099		1/1996
JP	10217968		8/1998
JP	11192948		7/1999
WO	2005105536	A1	11/2005

OTHER PUBLICATIONS

Balkov, P.O. et al; Electrical Strain-guage Scales; Oct. 1961; Tanslated from Izmeritel'naya Tekhnika, No. 10, pp. 17-20.

MSI-9300 Series User Guide, Rev 1 Jul. 27, 2002 for SW Ver 1-1.

Dillon EDxtreme Dynamometer and Crane Scale User's Manual, Dec. 2008 EDX_U.P65 PN 29808-0011 Issue AC.

See attached Information Disclosure Statement for Salco Technologies, LLC Handbrake Sensor—Brochure dated Mar. 30, 2007.

http://web.archive.org/web/20130206222004/http://lat-lon.com/gps-products/locomotive-monitoring unit, http://web.archive.org/web/20130206221020/http://lat-lon.com/gps-products/solar-tracking-unit http://web.archive.org/web/20130205074831/http://lat-lon.com/gps-products-sensors Available on the Internet at least as early as Feb. 6, 2013.

Printout of web pages found at http:/lat-lon.com/Available on the Internet at least as early as Sep. 23, 2013.

Printout of web pages found at http://www.skybitz.com/Available on the Internet at least as early as Sep. 23, 2013.

Printout of web pages found at http://www.transcore.com/Available on the Internet at least as early as Sep. 23, 2013.

Printout of web pages found at http://www.id-systems.com/Available on the Internet at least as early as early Sep. 23, 2013.

Printout of web pages found at http://www.microstrain.com/wireless sensors Available on the Internet at least as early as Sep. 23, 2013.

International Search Report in related WO Application No. PCT/IB2013/03267, dated Apr. 23, 2015.

International Search Report in WO Application No. PCT/US2014/072380, dated Apr. 27, 2015.

* cited by examiner

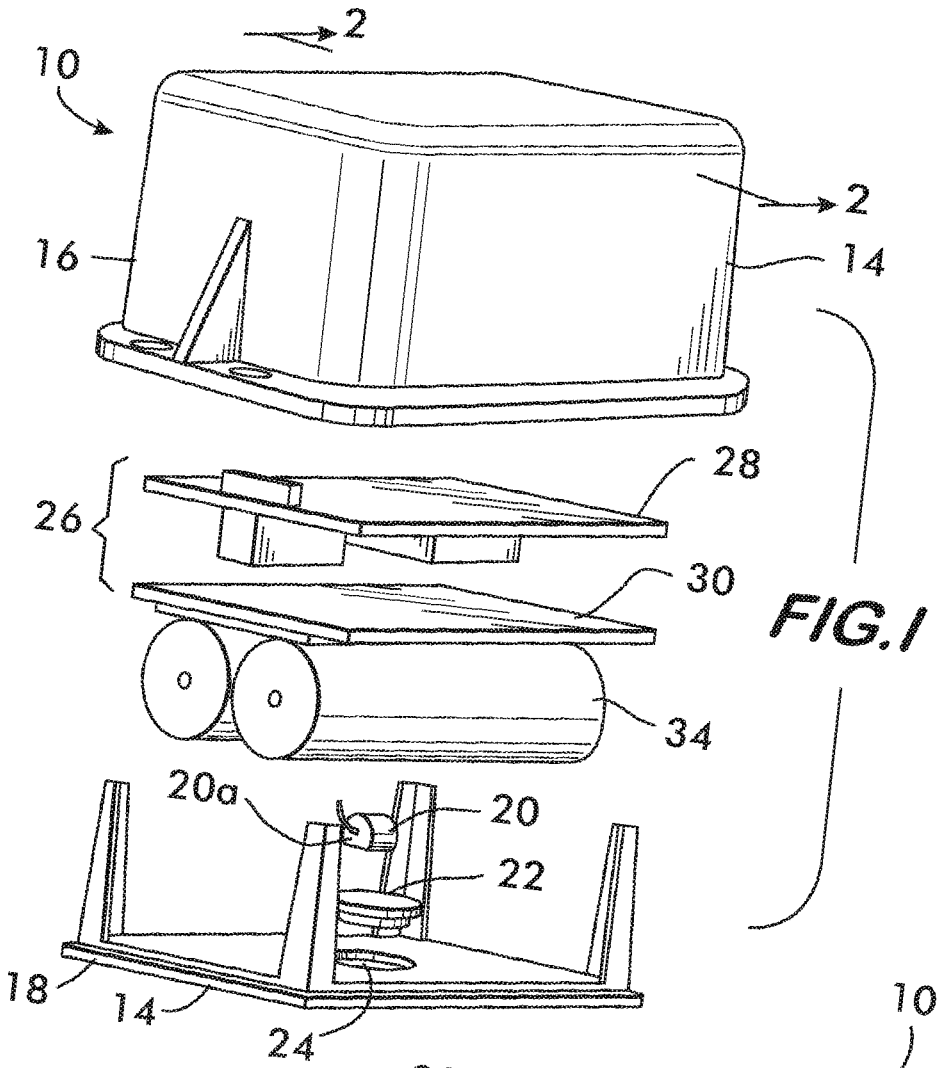

FIG.1

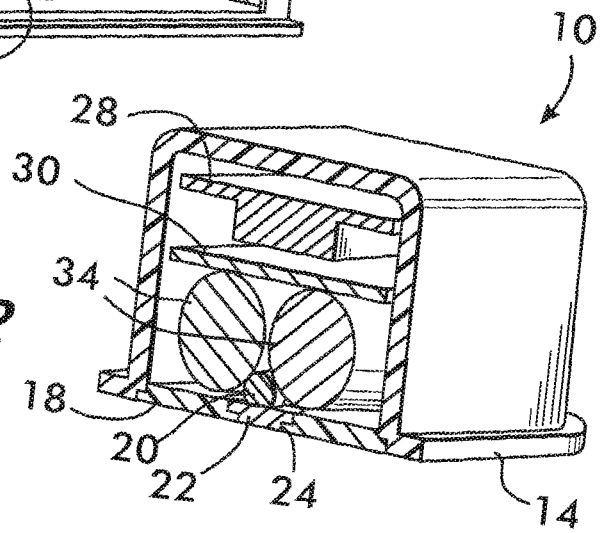

FIG.2

FIG.3

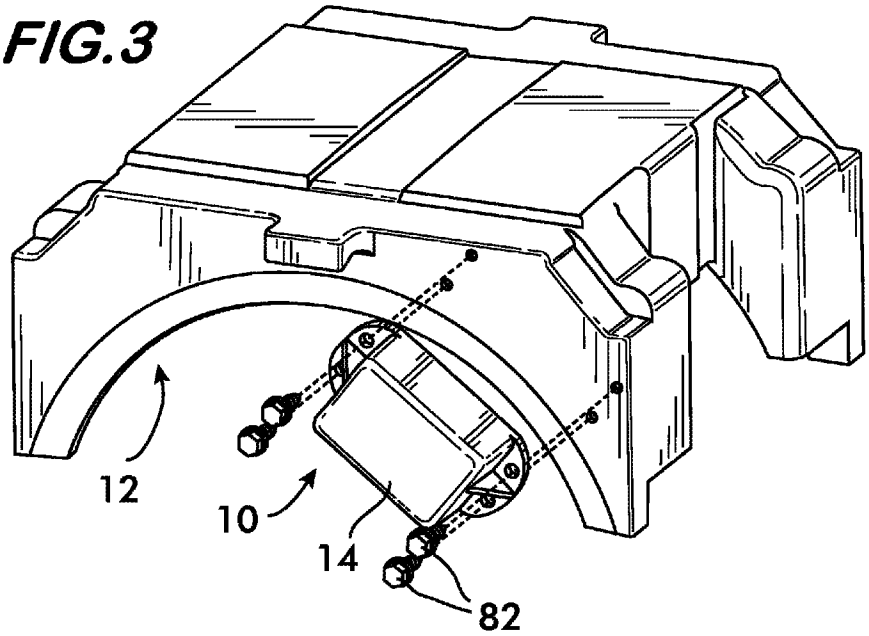

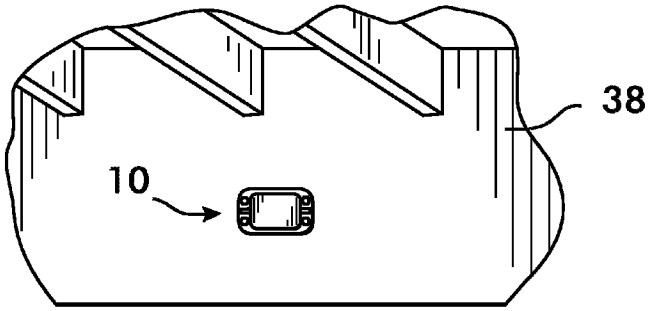

FIG.4

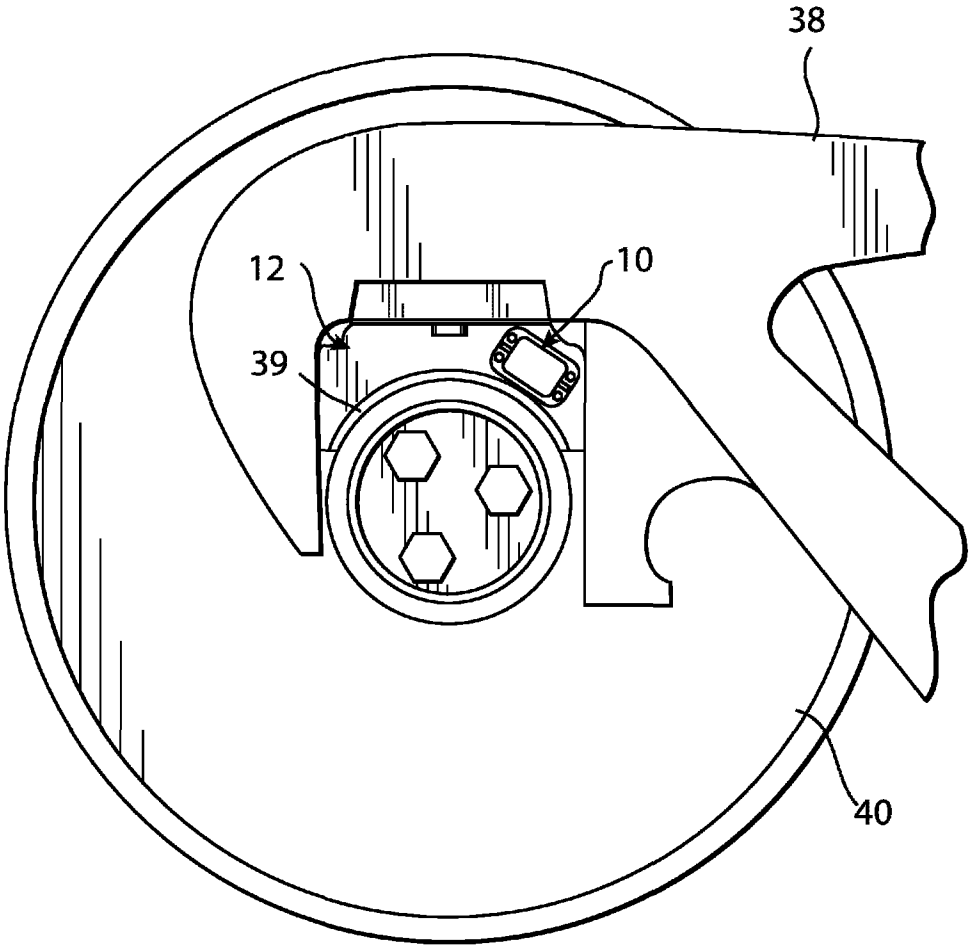

FIG.3A

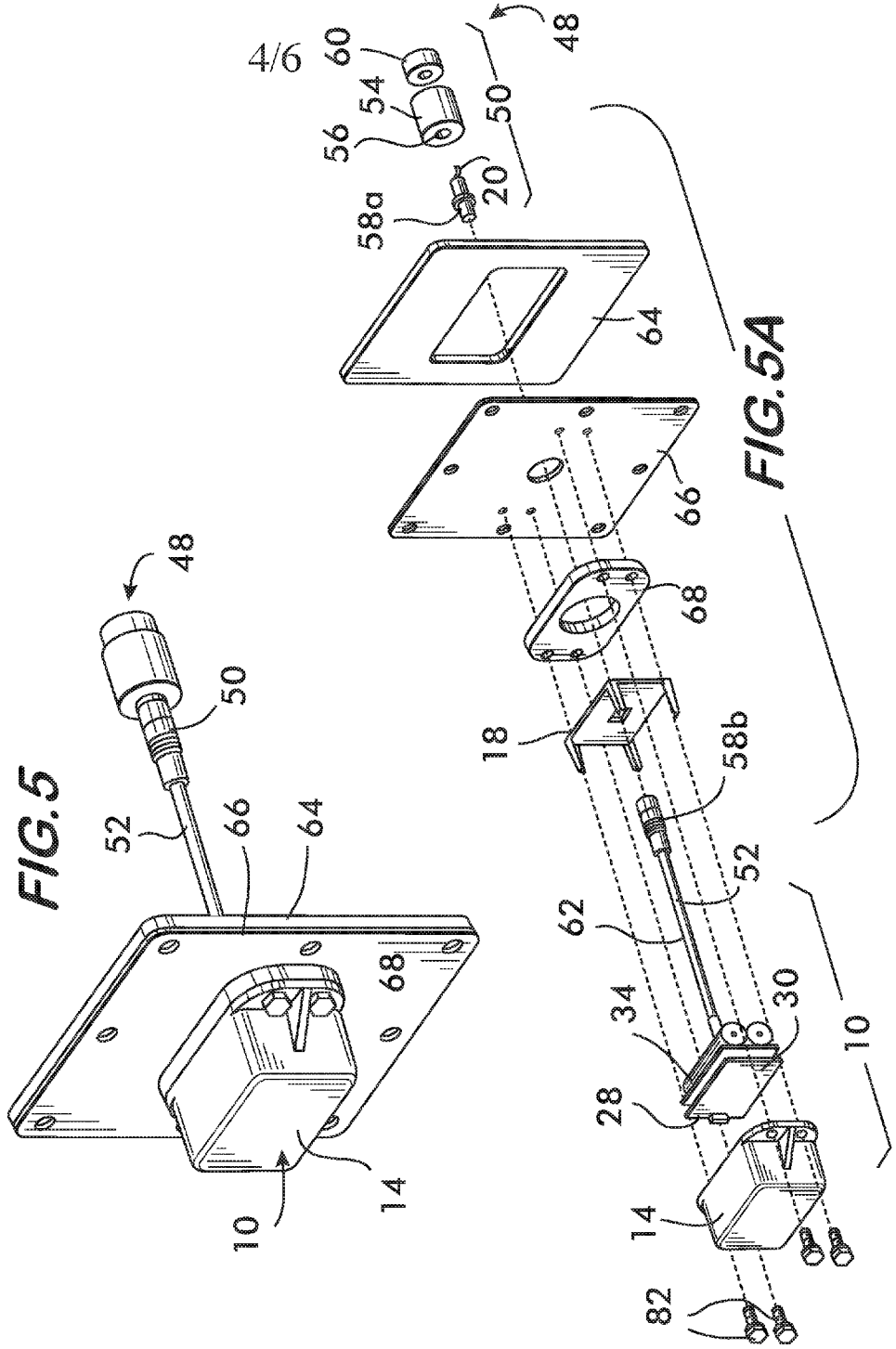

FIG.5

FIG.5A

FIG.5B

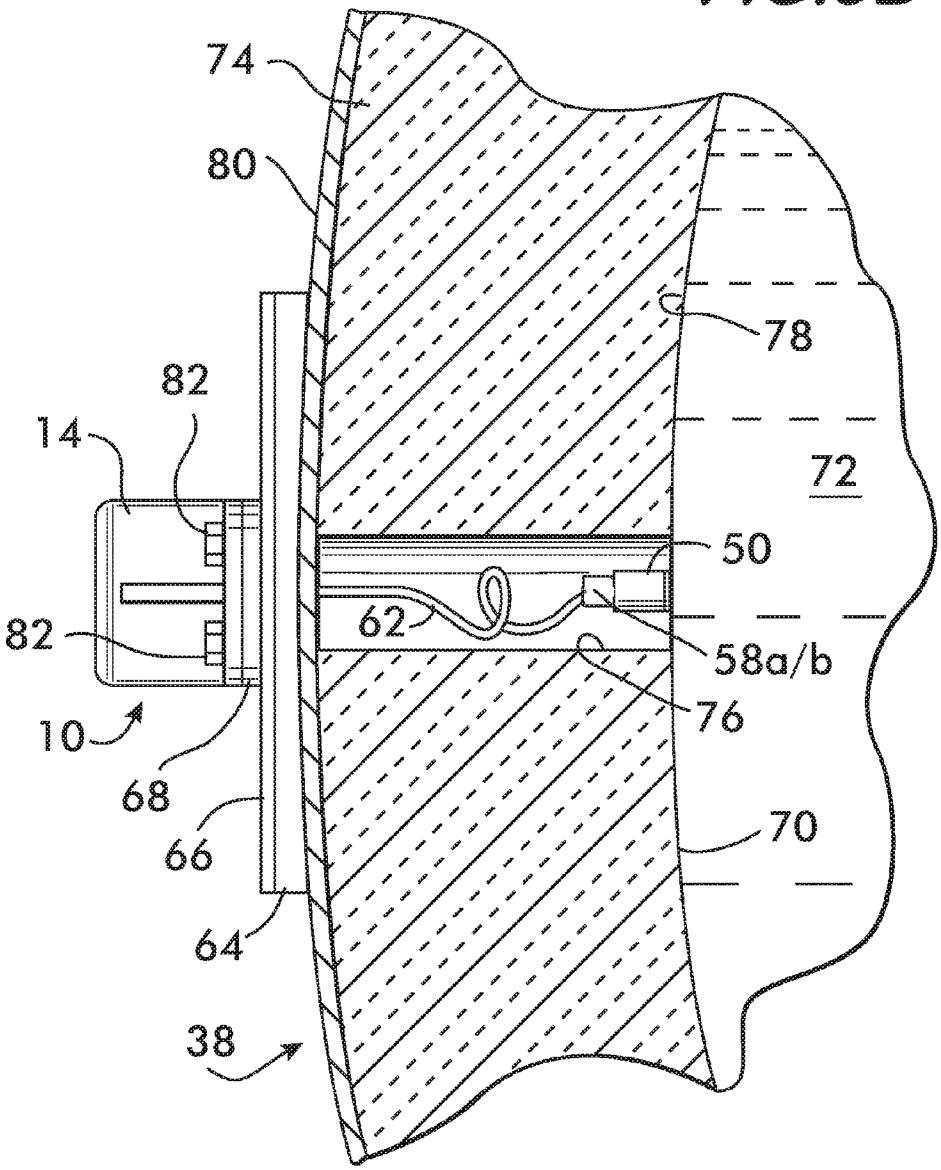

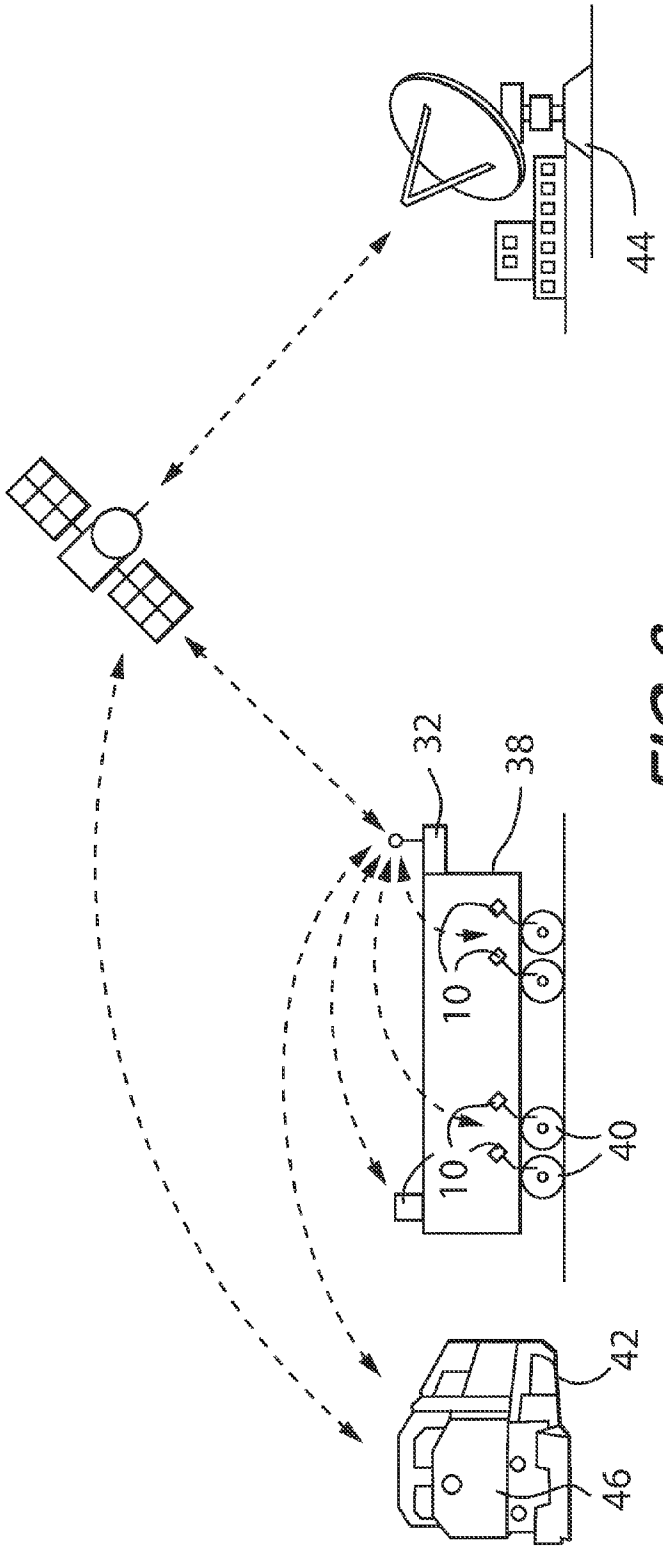

FIG. 6

SYSTEM AND METHOD FOR MONITORING RAILCAR PERFORMANCE

RELATED APPLICATIONS

The application is a continuation of U.S. patent application Ser. No. 13/842,427, filed Mar. 15, 2013, which claims the benefit of U.S. provisional filing Ser. No. 61/661,661, filed Jun. 19, 2012, and is a continuation-in-part of U.S. patent application Ser. No. 12/861,713, filed Aug. 23, 2010, (now U.S. Pat. No. 9,026,281, issued May 5, 2015), the disclosures of which are incorporated herein by reference.

FIELD OF THE INVENTION

This invention relates to a real-time monitoring and analysis system for railcars, and, more particularly, to a system that gathers data regarding various operating parameters and conditions from remote sensors and applies heuristics to analyze the data to detect and/or predict operational failures. Specific uses for monitoring temperatures on a railcar are also disclosed.

BACKGROUND OF THE INVENTION

To prevent incidents and improve efficiency, railcar owners and operators need an understanding of how their assets are performing. With heavier cars in service, there is a greater need to identify "bad actors" (cars which can damage track infrastructure and lead to derailments) as soon as their performance becomes unacceptable. There is also a need to increase average train speed by improving high speed performance and reducing unplanned service interruptions through mechanical failures. Car owners increasingly seek to implement preventative maintenance programs to predict and avoid mechanical failures in the field and to efficiently schedule repairs at a facility and time of their choice. Finally, with more automation of rail operations and increasing regulation to improve safety, the railroad industry needs new ways to monitor the performance of trains, cars and railcar trucks.

Even minor mechanical failures could lead very quickly to a catastrophic failure, not only of a single railcar, but of the entire train. Thus it is desirable to detect and report deviations from operational norms or predictions of impending failure to the locomotive or to a central data handling facility as quickly as possible, allowing for timely human intervention.

One approach in use in North America is the use of wayside defect detectors at fixed locations throughout the railroad network. Detectors measuring bearing temperature (hotbox detectors) are common, while other wayside detectors to measure wheel impacts, bearing condition (from acoustical signatures) and lateral forces are gradually being introduced. However, while one detector can monitor many freight cars as they pass, they can only provide a spot check on performance. It is quite possible that defects will only become apparent and escalate to a critical level between detectors.

Another approach to railcar performance monitoring has been to use on-board instrumentation. One such prominent system has been developed for the Federal Railroad Administration. In this and other similar systems, a number of instruments on different areas of a freight car are used to make discrete measurements before being communicated to a central hub on the freight car. While providing a superior solution to that provided by wayside monitors, wiring, complexity and costs increase the investment required to monitor the cars and decrease efficiency and reliability.

The current systems, however, lack the ability to apply heuristics to act on data gathered from more than one sensor or to detect operational deviations or trends which show deviations from nominal operating parameters. Furthermore, current systems are limited in that they lack the ability to apply such heuristics at multiple levels, for example, at the individual sensor level, at the railcar level, and at the train level. Lastly, current systems lack the ability for sensors to efficiently and reliably communicate their data to a central data gathering facility using a wireless communications infrastructure that has multiple redundancies and which allows communication of data between individual sensors.

Therefore, it would be desirable to have a system which addresses these current deficiencies and which improves (1) the ability to reliably collect and utilize data from multiple sensors on each railcar; (2) the ability to analyze collected data by the application of heuristics to detect and predict operational deficiencies; and (3) the ability to determine the severity of detected conditions to determine if immediate alarms should be raised to facilitate human intervention.

SUMMARY OF THE INVENTION

The present invention has the objective of providing means for monitoring the output from a variety of sensors attached to a railcar and determining the behavior and condition of the railcar and its various components based on an analysis of this data. This provides regular assurance of proper performance and condition as well as necessary warnings of impending or actual failure in a timely and useful manner to the operators and owners of the train.

Some of the performance criteria that is useful to monitor, for example, include roller bearing temperature, temperature of the commodity being carried, position of the hand brake, roller bearing adapter displacement, wheel condition, truck hunting/warp/binding, brake status and performance, load status and load amount, whether a partial derailment has occurred and potentially problematic track conditions.

Given the demanding environment in which railroad trains operate, any monitoring system must be rugged, reliable and able to operate for long periods with little or no maintenance. In addition, to be cost effective, it should not add significant cost to install, maintain or operate the system. Because there are more than 1.5 million freight cars in North America alone, a system of monitoring all cars in use is highly desirable and, as such, the system needs to be able to deal with a very large number of potential devices.

In one embodiment of the invention, sensing units or devices, herein referred to as "motes", are deployed at various locations around the railcar. The motes can include a sensor, a power source, circuitry to read the sensor and convert the readings to a digital form, and communication circuitry which allows the mote to wirelessly transmit the sensor readings to an external receiver. In some instances, a mote may also have the capability to perform low-level analysis of the data to determine if an alarm needs to be raised, and the ability to communicate the alarm to an external receiver.

Each railcar also can be equipped with a communication management unit (CMU) which communicates with each of the motes deployed on the railcar. The CMU is capable of wirelessly collecting data from each of the motes and performing higher-level analysis of the data to detect imminent or actual failures. During such data analysis, heuristics may be applied to determine potential failures based on

statistical models and empirical data. The CMU is also capable of communicating both the data and the results of any analysis to a receiver remote from the railcar.

The remote receiver may be located on the locomotive or other central location on the train, or may be off-train. The remote receiver may also be able to perform higher-level analysis of the condition of the train by applying heuristics and statistical models to data collected from a plurality of CMUs, located on different railcars in the train. The analysis of the data collected can be carried out at any of the different event engines distributed among the various components in the present invention, including the sensor units, CMU, and mobile or land base stations.

It is therefore an objective of this invention to provide a comprehensive system which allows the wireless collections of data and the analysis of that data to predict operational failures and to provide adequate warning of those failures to allow for human intervention before a catastrophic failure occurs.

It is another object to provide specific sensor applications, such as temperature sensors that can monitor the temperature of various components and items on the railcar.

The discussion which follows describes the system as in the context of a freight car, however, it will be understood by one of skill in the art that the same methods are applicable to any railroad vehicle. Furthermore, while the description which follows features a freight car with two trucks (or bogies), it is applicable to any configuration with more or less trucks or axles.

BRIEF DESCRIPTION OF THE DRAWINGS

FIG. **1** is an exploded perspective view of a mote in accordance with the present invention;

FIG. **2** is a cross sectional view of the mote shown in FIG. **1**;

FIGS. **3** and **3**A are views of the mote of FIG. **1** shown mounted on a railcar bearing adapter;

FIG. **4** is view of a mote, configured as a temperature sensor, mounted on a railcar to obtain ambient air temperature readings;

FIG. **5** is a view of an alternative temperature sensor mote;

FIG. **5**A is an exploded view of the sensor mote of FIG. **5** shown with components for mounting to the railcar;

FIG. **5**B is a schematic view of the sensor mote of FIG. **5** shown in use with a tank railcar; and

FIG. **6** is a schematic diagram showing the communications pathways in accordance with the primary embodiment of the invention.

DETAILED DESCRIPTION OF THE EMBODIMENTS

In broad terms, a novel means for monitoring the performance and operation of a railcar is provided. This includes a system for monitoring the railcar and sensors mounted on the railcars for use with the system. These sensors communicate with a communication management unit preferably mounted on the railcar. The sensors monitor and/or collect data on particular parameters and conditions of the railcar. If a problem is detected, alarms can be forwarded for further action. The sensors are describe below with an exemplary sensor directed to monitoring temperature. This is followed by a detailed description of the monitoring system using the sensors.

In a preferred embodiment of the invention, the sensors are contained and deployed in a self-contained housing which generally includes the sensor, long-life batteries, a processor board and communications unit. As previously mentioned, these remote units are referred to herein as "motes". The motes can be configured for the parameter or condition to be monitored, and can be placed on the train in the location chosen for such monitoring.

With reference to FIGS. **1**, **2**, **3** and **3**A, an exemplary mote **10** is now described. In this particular embodiment, the mote **10** is configured to be mountable to the surface of bearing adapter **12** of a railcar for monitoring the temperature of the wheel bearing. The mote **10** has a housing **14** having a first or lid section **16** and a second or base section **18**. Preferably, the housing sections **16** and **18** are composed of a hard plastic resistant to environmental damage, such as a UV rated polymer, e.g., a polycarbonate/ABS blend, and when fully assembled is weatherproof. After the various components are installed within the housing **14** as described below, a potting material (not shown) is provided through openings in the housing **14** to maintain, encapsulate and environmentally seal the components within. Any suitable electrical potting material capable of protecting the electric circuitry and components from the harsh railroad environment can be used, where harsh weather, UV exposure, humidity, vibration, mechanical impact, thermal shocks and abrasion might occur while the device is in operation. Such materials include epoxies, polyurethanes and silicone compounds. A flexible urethane suitable for electrical use and through which wireless signals of the frequencies to be used can be transmitted is preferred.

A sensor **20** configured for monitoring the desired parameter or condition may be mounted within the housing **14** or may be external to the mote and be electrically connected thereto. FIGS. **1** and **2** show a temperature sensor **20***a*, which is thermally coupled to heat transfer element **22** which extends through an opening **24** in the housing **14**, a preferred heat transfer element **22** being a brass plug as shown. The thermal transfer element **22** is thermally coupled to the sensor **20** via a thermal epoxy. This configuration is preferred for monitoring the surface temperature of the item to which the mote is attached since the heat transfer element **22** will contact the surface on which the mote is attached. A preferred temperature sensor is a silicon temperature sensor which is ideal for electronic circuits. In this embodiment, the mote **10** will be mounted to place the brass plug **22** in thermal communication with the portion of the railcar for which a temperature reading is desired. As one of ordinary skill would recognize, the configuration of the motes **10** with respect to the sensor **20** is dependent upon the type of sensor and the type of data desired. Sensor **20** can be any type of sensor, including for example, a temperature sensor, a pressure sensor, a load cell, a strain gauge, a hall effect sensor, a vibration sensor, an accelerometer, a gyroscope, a displacement sensor, an inductive sensor, a piezio resistive microphone or an ultrasonic sensor. In addition, the sensor may be a type of switch, including, for example, reed switches and limit switches. An example of another type of mote sensor which uses a strain gauge, e.g. a hand brake monitor sensor, is described in U.S. patent publication 2012/0046811 (U.S. patent application Ser. No. 12/861,713 filed Aug. 23, 2010), the disclosure of which is hereby incorporated herein by reference.

Electrical circuitry **26** is provided for the operation of the mote **10**. The electrical circuitry **26** includes the components and wiring to operate and/or receive and process the signals from the sensor **10**. This can include, but is not limited to,

analog and digital circuitry, CPUs, processors, circuit boards, memory, firmware, controllers, and other electrical items, as required to operate the temperature sensor and process the information as further described below. In the illustrated embodiment, the circuitry **26** is in electrical communication with the temperature sensor for receiving signals therefrom. Two circuit boards are provided connected to one another via a header, as further discussed below.

The circuitry **26** includes a main board **28** which includes the communications circuitry, antennae and microprocessor and a daughter board **30** including the circuitry to read the data from the sensor **10** and may perform analog to digital conversion of the data and also may include power conditioning circuitry. Main board **28** may also include intelligence sufficient to perform low-level analysis of the data, and may accept parameters from outside sources regarding when alarms should be raised. For example, for the mote **10** shown in FIGS. **1** and **2**, with a temperature sensor **20**, may be programmed to raise an alarm when the sensed temperature exceeds a certain threshold for several consecutive readings.

The main board **28** also includes circuitry for wireless communications. Preferably, each mote **10** on a railcar is formed into an ad-hoc mesh network with other motes **10** on the same railcar and with a Communication Management Unit (CMU) **32**, also preferably mounted on the same railcar **38** (see FIG. **6**). In the preferred embodiment, each mote **10** would transfer its data to the CMU **32** mounted on the same railcar. This transfer of data may occur directly or the data may be relayed by other motes in the mesh network to the CMU **32**. The ad-hoc mesh network is preferably formed using the Time Synchronized Mesh Protocol, a communications protocol for self organizing networks of wireless devices.

Mote **10** also includes a long-term power source **34**, preferably a military grade lithium-thionyl chloride battery. Daughter board **30** includes power conditioning and management circuitry and may include a feature to conserve battery life which keeps mote **10** in a standby state and periodically wakes mote **10** to deliver readings from sensor **20**.

The individual motes **10** are mounted on the areas of interest on a railcar **38**. As an example, FIGS. **3** and **3**A show a temperature sensing mote **10** of the type described above mounted to a bearing adapter **12** of a railcar wheel bearing **39** of a railcar. The unit may be attached using a thermally conductive epoxy adhesive between the brass plug **22** and the adapter **36** to ensure good heat transfer to the temperature sensor and mechanical fasteners such as self tapping screws to hold the mote **10** in place. In this particular example, motes **10** may be attached to all 8 wheel bearing adapters **12** of each railcar wheel **40**. In addition, an ambient temperature sensor mote **10** may also be mounted on an area of the railcar **38** receiving free airflow. FIG. **4** shows a mote **10** mounted on the body of a railcar **38** for monitoring the ambient temperature. The device electrical circuitry **26** obtains information related to the temperature being monitored, e.g., a bearing or ambient. Since the temperature sensor is not in direct contact with the bearing, but the bearing adapter, the device is calibrated so that the temperature reading is indicative of the bearing temperature. This calibration takes into account the temperature of the bearing adapter at the point measured (see FIG. **3***a*), the ambient temperature as measured by the second temperature sensor mote mounted elsewhere on the rail car so as to sense ambient temperature (see FIG. **4**), and information about the type of bearing adapter (different models have different sizes and configurations). Calibration information for use by the circuitry **26**, such as a calibration algorithm, can be developed with suitable testing. Bearing temperature information that constitute various alarm states can also be provided to the circuitry **26**, preferably stored thereon, allowing the device **10** to monitor the bearing temperature and, based on the ambient temperature, determine the bearing temperature and take action as desired. On a typical railcar **38**, there will be eight sensors **10**, one on each bearing adapter **12** (at each wheel **40**); and one sensor **10** placed to measure ambient temperature. The ambient temperature sensor **10** will communicate the ambient temperature to the CMU, which provides this information to the sensors at the bearing adapters as they call for the information. This will allow the sensors **10** at the bearing adapter **12** to determine the bearing temperature and then determine if further action is required, such as communicating an alarm of high temperature. Again, time Synchronized Mesh Protocol, a communications protocol for self-organizing networks of wireless devices, is preferred to communications between the devices **10** and the CMU **32**.

An alternative temperature sensor mote **10** is illustrated with reference to FIGS. **5**, **5**A and **5**B showing a mote **10** for monitoring the temperature of a part of the railcar spaced from the housing **14** of the mote **10**. For example, it may be desirable to monitor the temperature of a commodity stored in a vessel or the temperature inside of a container by monitoring the temperature of the vessel or container wall, but a mote **10** as described above for attaching directly to the surface to be monitored is not suitable. Here the mote **10** is constructed the same as that described above but with the temperature sensor **20** positioned in a probe **48** spaced from the housing **14**. The temperature sensor **20** sits within a sensor probe head **50** electrically attached to the housing **14** via wires **52**. The head **50** is preferably cylindrical having a ring shaped head body **54** made of a thermally conductive material such as stainless steel. Fitting within a head body opening **56** is the temperature sensor **20** electrically attached to an electrical connector **58***a*. A ring shaped magnet **60** with an opening in its center fits around the sensor **20** within the head **50**. Thermally conductive epoxy or other suitable potting material seals the magnet **60** and temperature sensor **20** within the body **50** and ensures good heat transfer to the sensor **20**. A corresponding electrical connector **58***b* connected to corresponding connector **58***a* connects temperature sensor **20** via wire **52**, preferably a flexible PVC coated cable **62**, to the mote housing **14**. To aid in the mounting of this housing **14**, a silicon gasket **64**, metal mounting plate **66**, and housing silicon mounting gasket **68** are provided. The mote **10** continuously monitors the commodity temperature and alerts when specific criteria are met such as rapid temperature change, temperature thresholds exceeded, etc.

As an example of such a device and a method of installing the device, shown in FIG. **5**B representing a liquid holding tank **70** of a rail tank car **38**, the temperature mote **10** with the spaced probe **48** can be used to monitor the temperature of a liquid **72** stored within the tank **72** on a rail tank car **38** that is covered with a fairly thick insulation jacket **74** having an outside cover **80**. Here, a small opening **76**, about 2" diameter, can be cut into the jacket **74** allowing the probe head **50** to be attached to the cleaned outside surface **78** of the vessel **70** with thermally conductive epoxy. The magnet **60** within the head **50** helps hold the probe **48** in place while the epoxy cures. The housing **14** of the mote **10** is mounted on the outside of the jacket cover **80**, connected to the head

50 vial the cable 62 which can be coiled if necessary to fit within the opening 76. To attach the housing 14 to the jacket cover 80, the silicone gasket 64 is placed against the jacket cover 80 over the opening 76, followed by the metal mounting plate 66, followed by silicone gasket 68, the gaskets 64 and 68 ensuring a good weather seal of the housing 14 to the jacket cover 80. The metal mounting plate 60 is screwed or bolted to the jacket cover 80, and the mote housing 14 is screwed to the mounting plate 66 with screws 82. Calibration of the mote circuitry ensures an accurate temperature reading of the liquid 72 within the vessel 70, and ambient temperature, monitored from another sensor 10, can be used to calculate accurate temperature readings.

To communicate data collected by the motes 10, each mote is in two-way communication with a CMU 32 mounted on the railcar 38, which collects data from each mote and can also send instructions to the motes, as shown in FIG. 6. As previously stated, CMU 32 and each of the motes 10 connected to the same railcar 38 form a local area ad-hoc mesh network, to facilitate communications therebetween. The term "Communication Management Unit" or "CMU" as used herein means any device capable of receiving data and/or alarms from one or more motes 10 and capable of transmitting data and alarm information to a remote receiver. CMU 32 is preferably a single unit that would serve as a communications link to other locations, such as a mobile base station 42 (e.g., the locomotive 46), a land-based base station 44, etc, and have its own circuitry, CPUs, processors, memory, power source, etc. to process the data received. In a preferred embodiment, it can also communicate with, control and monitor motes 10 on the railcar 38.

CMU 32 is capable of performing advanced data analysis, using data collected from multiple motes 10, and may apply heuristics to draw conclusions based on the analysis. The chart below contains examples of the types of mote sensors 10 and high level descriptions of the heuristics applied to analyse the data.

Parameter Sensed	Sensor Type	Output	Heuristic
Adapter Temp.	Temperature Sensor	Bearing Temp.	Adapter temperature is correlated to bearing cup temperature using empirical data.
Hatch Position	Reed Switch	Hatch open/close	Determine open/closed state dependent upon state of switch.
Pressure	Pressure Transducer	Brake pressure	The pressure transducer is fitted directly to the trainline for measuring pressure.
Handbrake Link Strain	Strain Gauge	Handbrake On/Off	Handbrake link strain is correlated to the ON/OFF status of the handbrake.
Bolster Displacement	Hall Effect Sensor	Car Load	Bolster/side frame displacement is measured and spring stiffness data is used to convert displacement to load.
Bolster position	Reed Switch	Car Empty/Full	The relative position of bolster/sideframe is measured. The LOADED position is determined using empirical data or spring stiffness.
Inner Jacket Temp.	External Temperature Sensor	Tank Car Commodity Temp.	Inner jacket surface temperature on a tank car is determined and commodity temperature can be estimated using theoretical conduction/convection laws.
Bolster Position	Limit Switch	Car Empty/Full	A limit switch is mounted to the sideframe and activated when the bolster/sideframe position is in the loaded state.
Sill Acc.	Accelerometer	Coupler Force	Impact data is collected. Using empirical data, a modal influence matrix can be computed for different coupler types that relates the impact data to the output. Using an FFT on the sampled data, and multiplying by the inverse of the modal matrix yields the input in the frequency domain. This input can be converted to the time domain to yield the coupler force.

-continued

Parameter Sensed	Sensor Type	Output	Heuristic
Adapter Acc.	Accelerometer	Bearing Fault Indicator	An adapter mounted accelerometer can be used to sample dynamic bearing data. An FFT can be used on data sets and plotted over time to isolate dominant modes and any shifting or relative amplification. Amplification at rolling frequency indicates a likely fault.
Radial Axle Acc.	Accelerometer	Vehicle Speed	An axle mounted accelerometer can be used to measure radial acceleration. The radial acceleration can be converted to vehicle speed using simple dynamics using the wheel and axel diameters.
Adapter Acc.	Accelerometer	Bearing Fault	An adapter mounted accelerometer can be used to sample dynamic bearing data. Kurtosis can be computed as an indicator of bearing damage. Kurtosis is measured in the time domain and requires computation of a probability density function.
Adapter Acoustics	Piezio-electric sensor, microphone, and accelerometer	Bearing Fault	Sampled acoustic data can be used for either an acoustic noise response or Acoustic Emission which is ring-down counts and amplitude. Empirical data from defective bearings is needed.
Temp.	Temperature sensor	Commodity/Fluid Pressure	A temperature sensor can be used to measure surface temperature of a pressure vessel (Tubing, tank, etc.). Heat conduction equations can be used to convert the surface temperature to fluid temperature. Using published data for the working fluid, the temperature can be converted to pressure.
Displ.	Displacement Sensor	Coupler Force	Coupler displacement is measured and correlated to force using force-closure curves.
Axle RPM	Inductive Type Sensor	Vehicle Speed	An inductive proximity sensor facing the axle can generate a signal in response to an exciter ring on the axle, and converted to vehicle speed using wheel and axle diameters.
Adapter Acc.	Accelerometer	Track Damage Detection	Sensor is mounted on an adapter or other truck component to sample dynamic data. A Probability Density Function and Kurtosis can be computed from the data. High Kurtosis, or impulsivity, will indicate track defects. A transfer function relating the wheel input to the adapter is needed, and can be

-continued

Parameter Sensed	Sensor Type	Output	Heuristic
			determined empirically or by creating a theoretical model.
Adapter Acc.	Accelerometer	Truck Hunting Detection	Sensor can be mounted on an adapter or other truck component to sample dynamic data. A simple algorithm could use an FFT to isolate known hunting frequencies. More sophisticated algorithms could detect flange impacts using time-series data.
Wheel Temp.	IR Temperature Sensor	Wheel Tread Temp	Wheel temperature is correlated to tread temperature using empirical data.
Proximity	Ultrasonic Sensor	Empty/Full status	An ultrasonic sensor could be used to detect the presence of lading in tank-cars, box-cars, covered hoppers, etc.
Strain	Load Cell	Car Load	Load cell on multiple places of the truck.
Displ.	Reed Switch	Handbrake On/Off	Position of a handbrake chain is determined and correlated to On/Off Status.
Bolster Acc.	Accelerometer	Truck tilt angles	Using a 3-axis accelerometer fixed to a bolster, the gravitational field can be used to measure the respective roll, pitch, and yaw angles with respect to fixed-earth coordinates.
Hatch Acc.	Accelerometer	Hatch Tilt	Accelerometer measures the relative tilt of hatch with fixed-earth coordinates.

As shown in FIG. **6**, CMU **32** also communicates data and alarms to a remote location, either a mobile base station **42** located on the train, usually in the locomotive, or to a stationary, land-based base station **44**, or both. Data and/or alarms may be relayed from land-based base station **44** to the mobile base station **42**. CMU **32** may be in constant wireless or wired communication with the mobile base station **42**, which may communicate with the land-based base station **44** via the cellular network, via satellite, or via any number of other well known means.

Data collected from motes **10** may be sent to base station **44** for analysis and further action. The heuristics shown in the chart above may be performed by either mobile base station **42** or land-based base station **44**. In addition, either station **42**, **44** may utilize train-wide heuristics to predict train-wide failures, or to spot train-wide trends, which a single CMU **32** may be unable to do with data from only a single railcar **38**.

When an alert is detected, it is preferably sent to a display unit in the locomotive **46** or at the land-based base station **44**. Any typical display unit of a type that would be mounted in a mobile base station **42**, such as in a locomotive, may be used. Communications devices as known in the art communicate with base station **44** via satellite, and display units display the alert to the locomotive engineers. Incoming alerts may appear on the display and are accompanied by an audible alarm which must be acknowledged and cancelled by the driver. Each type of alert is accompanied by a recommended practice that the locomotive driver should take when an alert appears, based on the needs of the particular rail network. The action required to be taken by the locomotive driver varies based on the severity of the alert. Alerts may also be sent via email or posted to a web site.

Setting locomotive alarm thresholds at values that are sub-critical will likely lead to an excess of stoppages and delays. As such, alert messages are selected such that only actionable messages are sent to the locomotive **46**, meaning that only those alarm levels that require the crew to take action are typically transmitted to the locomotive crew. In addition, rather than requiring the train to be stopped on the mainline, some alerts could be addressed by putting operating restrictions in place. For example, speed restrictions can be placed on the operation of the train at tiered alarm levels so that the train would be allowed to proceed to a siding or other appropriate stoppage point, allowing other traffic to continue on the mainline without inordinate delays or costs. Low level (Level 1/Stage 1) alerts, however, can still be monitored at base station **44** to make determinations about repeat temperature offenders and/or trending events that would signify an impending problem, although not imminent.

As an example of operation, consider the monitoring of wheel bearings. The goal is to monitor bearings in motion,

therefore, data that is collected while the railcars **38** are motionless does not contribute to determining the condition of the bearing. To save power and limit the uninformative temperature information, data may be suppressed when the railcar was not moving. As such, data is only stored in CMU **32** and transmitted to the base station **42**, **44** when useful data is found. Three conditions that might define "interesting" or "useful" data include:

1. 'Differential Condition' events;
2. 'Above Ambient Condition' events; and
3. 'Node Temp Anomalies'.

A Differential Condition event exists when the difference across any axle is greater than or equal to a specified variable.

An Above Ambient Condition event occurs when any bearing temperature exceeds the value reported from the Ambient Temperature Node by a specified constant.

A Node Temp Anomaly occurs when any data channel, bearing or ambient, does not report valid temperatures even though other channels are collecting data well past the corresponding time period. The delay allows the system a chance to recover from possible communication errors. CMU **32** will continue to gather and save temperatures from the other bearings, even if a full data set should have been gathered and one or more channels are missing data.

The data suppression is confirmed by seeing all temperature data converge to ambient (train has stopped) before logging stops. Divergent temperatures show the bearings are generating heat again and the train has started moving.

Levelled Alarms and Responses

These are examples of various levels of alarms, based on severity, and the appropriate response:

- Stage 1: "Bearing Temp Alarm"
  - Alarm to base station only
  - Used for trending recommendations and repeat offender identifications
- Stage 2: "Axle Differential Alarm": is the condition any bearing that is a predetermined amount hotter than its axle mate
  - Action: Stop train, check journal of alarming bearing. Look for any sign that the bearing is "walking off" the axle, grease is being purged, or the bearing has been damaged.
  - Proceed at predetermined reduced maximum speed until a stage 2 "alarm clear" message is received at the locomotive terminal
  - If stage 2 "alarm clear" message is received at the locomotive terminal, proceed as normal
- Stage 3: "Above Ambient Alarm": is when any bearing is at a temperature a predetermined amount above ambient
  - Action: Stop train, check journal of alarming bearing. Look for any signs that the bearing is "walking off" the axle, grease is being purged, or the bearing has been damaged.
  - Proceed at predetermined reduced maximum speed until stage 3 "alarm clear" message is received at the locomotive terminal, at which point speed can be increased
  - If the alarm message does not clear, a choice can be made to remove and change the bearing at an appropriate stoppage point; otherwise, reduced speeds are required to reduce the chance of a screwed journal or catastrophic bearing failure
  - If Stage 2 and Stage 3 "alarm clear" messages are both received at the locomotive terminal, proceed as normal
- Stage 4: "Critical Alarm": this is the absolute alarm set at a predetermined bearing temperature
  - Action: Stop train, remove bearing

Advanced Algorithms—

Improvements to the alarms can be made based on statistical models of bearing temperature behaviour. The following section details examples of advancements to the existing data analysis as it pertains to identifying bearings that are on the "watch list" for degrading/trending condition.

Level 2 Algorithms

The Level 2 algorithms use temperature data that had been collected every minute while the railcar had been moving during a period of days directly preceding this analysis. When at least four of the following five criteria are flagged for the same bearing, an alert may be sent to the customer to schedule maintenance for that bearing.

- Criteria 1—Peak Analysis: Count the percentage of bearing temperature values>a predetermined value
  - For each bearing, count the number of temperature readings that occur above a predetermined value
  - Flag any bearing with a certain percentage of temperature values>a predetermined value
- Criteria 2—Above Ambient Analysis: Count the percentage of bearing temperature values>a defined value above ambient
  - For each bearing, count the number of temperature readings that occur over a defined value above ambient
  - Flag any bearing with a certain percentage of temperature values>the defined threshold
- Criteria 3—Deviation from Wagon Average Analysis: Calculate the average bearing temperature and standard deviation of each bearing compared to the average of bearing temperatures for the rest of the wagon
  - Calculate the average temperature over the time span for each bearing and the wagon average
  - Calculate the standard deviation on each bearing temperature from the wagon average
  - Flag any bearing with a certain standard deviation
- Criteria 4—Deviation from Fleet Average Analysis: Calculate the average bearing temperature and standard deviation of each bearing compared to the average of bearing temperatures for the rest of the fleet
  - Calculate the average temperature over the time span for each bearing and the fleet average
  - Calculate the standard deviation on each bearing temperature from the fleet average
  - Flag any bearing with a certain standard deviation
- Criteria 5—Heating Rate of Change Analysis: Calculate the percent of operating time that a bearing is heating quickly
  - Calculate a linear fit to a moving window of temperature data
  - Count the number of instances where the slope of the linear fit is above a certain threshold
  - Flag any bearing with >a certain amount of the operating time having a slope of the linear fit>the threshold

Level 3 Algorithms

The Level 2 algorithms use temperature data that has been collected every minute while the railcar is moving for the previous 30 days directly preceding this analysis. When a bearing is ranked in the top five percent for at least four of the five criteria, an alert is sent to the customer to schedule maintenance for that bearing.

- Criteria 1—Peak Analysis: Count the percentage of bearing temperature values>a predetermined value

For each bearing, count the number of temperature readings that occur above a predetermined value

Rank the bearing in a league table with the rest of the fleet

Flag the top percent of bearings in the fleet

Criteria 2—Above Ambient Analysis: Count the percentage of bearing temperature values>a defined value above ambient

For each bearing, count the number of temperature readings that occur over a defined value above ambient

Rank the bearing in a league table with the rest of the fleet

Flag the top percent of bearings in the fleet

Criteria 3—Deviation from Wagon Average Analysis: Calculate the average bearing temperature and standard deviation of each bearing compared to the average of bearing temperatures for the rest of the wagon

Calculate the average temperature over the time span for each bearing and the wagon average

Calculate the standard deviation of each bearing temperature from the wagon average

Rank the bearing in a league table with the rest of the fleet

Flag the top percent of bearings in the fleet

Criteria 4—Deviation from Fleet Average Analysis: Calculate the average bearing temperature and standard deviation of each bearing compared to the average of bearing temperatures for the rest of the fleet

Calculate the average temperature over the time span for each bearing and the fleet average

Calculate the standard deviation on each bearing temperature from the fleet average

Rank the bearing in a league table with the rest of the fleet

Flag the top percent of bearings in the fleet

Criteria 5—Heating Rate of Change Analysis: Calculate the percentage of operating time that a bearing is heating quickly

Calculate a linear fit to a moving window of temperature data

Count the number of instances where the slope of the linear fit is >a certain threshold

Rank the bearing in a league table with the rest of the fleet

Flag the top percent of bearings in the fleet

In another alternate embodiment of the invention, one or more motes may be housed in alternative housings or built in to the railcar itself. In one such embodiment, motes can be built into the form of an adapter pad similar to the type shown in U.S. Pat. Nos. 7,698,962 and 7,688,218, the disclosures of both of which are incorporated herein by reference, which could be adapted for use with the present invention.

Various embodiments of the invention have been described in the context of various examples, however, the invention is not meant to be limited in any way. As one of skill in the art recognizes there may be many implementations that are within the scope of the invention, as is described in the following claims.

We claim:

1. A method of monitoring operational characteristics of a railcar comprising the steps of:

a. receiving data or processed information regarding said operational characteristic from one or more sensing units on said railcar, said sensing units monitoring an operational characteristic of said railcar;

b. applying a heuristic to said received data to determine deviations from nominal operating conditions;

c. assigning a severity level to said deviations from nominal operating conditions; and

d. determining an alarm condition based on said assigned severity level.

2. The method of claim **1** further comprising the initial step of establishing wireless communication with said one or more remote sensing units.

3. The method of claim **2** wherein said one or more remote sensing units form a mesh network.

4. The method of claim **2** wherein steps a-d are executed by a processing unit located on said railcar.

5. The method of claim **4** wherein said processing unit located on said railcar is a part of said mesh network.

6. The method of claim **2** further comprising the step of transmitting said alarm condition to a location remote from said railcar.

7. The method of claim **2** further comprising the step of transmitting said data received from said one or more sensing units to a location remote from said railcar.

8. The method of claim **2** further comprising the steps of:

a. receiving data from a plurality of railcars;

b. applying a heuristic to said received data to determine deviations from nominal operating conditions;

c. assigning a severity level to said deviations from nominal operating conditions;

d. determining an alarm condition based on said assigned severity level;

e. transmitting said raised alarm to a display unit on a train of which said plurality of railcars are a part.

9. The method of claim **6** further comprising the steps of

a. determining a recommended course of action based on said alarm condition; and

b. transmitting said recommended course of action to a display unit on a train of which said railcar is a part.

10. A method of monitoring a temperature of a desired part of a railcar, comprising:

(a) sensing the temperature of a part of the railcar other than the desired part by use of a temperature sensor in thermal communication with said other part;

(b) determining the temperature of the desired part by use of the temperature sensed in step (a);

(c) determining if said temperature of the desired part is outside an acceptable range of temperatures; and

(d) transmitting an alarm if in step (c) it is determined that the temperature of the desired part is outside an acceptable range.

11. A method of monitoring a temperature of a desired part of a railcar in accordance with claim **10**, further comprising the step of determining the temperature of the ambient air, which temperature is used in the determination of step (b).

12. A method of monitoring a temperature of a desired part of a railcar in accordance with claim **10**, wherein steps (a) through (d) are carried out by a single unit attached to said railcar.

13. The method of claim **1** wherein steps (a) through (d) can be carried out at different event engines distributed among at least two of said sensor units, a communication management unit, and a mobile or land base station.

14. A method for monitoring the operation of a railcar performed by a communication management unit disposed on said railcar comprising the steps of:

a. wirelessly receiving data from one or more sensing units which periodically collect readings from one or more sensors disposed on said railcar;

b. heuristically analyzing said received data to determine if an actual failure exists on said railcar or to predict potential or imminent failures based on a statistical analysis of said received data; and

c. communicating the results of said analysis to an off-railcar location.

15. The method of claim **14** wherein each of said sensing units can make a determination of an alarm condition based on data collected by the sensing unit, said method further comprising the step of:

a. wirelessly receiving notice of said alarm condition from said sensing unit; and

b. communicating said alarm condition to an off-railcar location.

16. The method of claim **14** further comprising the steps of:

a. making a determination of an alarm condition based on data received from two or more of said sensing units; and

b. communicating said alarm condition to an off-railcar location.

17. The method of claim **14** further comprising the step of placing said one or more sensing units in a stand-by state when said one or more sensing units is not reading data from any of said sensors or transmitting data.

18. The method of claim **14** further comprising the step of joining a mesh network consisting of one or more sensing units located on said railcar.

19. The method of claim **14** further comprising the step of joining a mesh network consisting of communication management units located on other railcars.

20. The system of claim **14** further comprising the steps of:

a. saving data received from said one or more sensing units in memory; and

b. comparing data received with said saved data to identify trends or deviations from normal readings of said data stored in memory.

21. A method for monitoring the operation of a railcar comprising:

a. collecting data at periodic intervals about one or more operating parameters of said railcar using one or more sensor units provided on said railcar;

b. communicating said collected data to a communication management unit;

c. analyzing said collected data by applying heuristics thereto to (i) determine if an actual failure exists and (ii) to predict potential or imminent failures based on a statistical analysis of said collected data.

22. The method of claim **21** further comprising the steps of:

assessing the collected data to determine if an alarm condition exists; and wirelessly communicating said alarm condition to an off railcar location.

* * * * *