US 20050194497A1

(19) United States

(12) Patent Application Publication

(10) Pub. No.: US 2005/0194497 A1

(43) Pub. Date: Sep. 8, 2005

Matzan

(54) SYSTEM FOR MONITORING THE TEMPERATURE OF WHEEL BEARINGS IN RAILROAD CARS

(76) Inventor: Eugene Matzan, Rochester, NY (US)

Correspondence Address:
ALEXANDER E. MARTENS
63 WINDING CREEK LANE
ROCHESTER, NY 14625 (US)

(21) Appl. No.: 11/030,761

(22) Filed: Jan. 7, 2005

Related U.S. Application Data

(60) Provisional application No. 60/550,432, filed on Mar. 8, 2004.

Publication Classification

(51) Int. Cl.[7] B61L 3/00

(52) U.S. Cl. ..... 246/169 A

(57) ABSTRACT

A system is described for automatic detection of overheated wheel bearings of railroad cars and carriages. Signals representing the temperature of such bearings are generated by temperature sensors that are installed in close proximity of the wheel bearings. The signals are amplified, digitized and, to prevent false indications, averaged for each individual bearing. The averaged signals from each bearing are than compared to the averaged signals from the other three bearings of the same car or vehicle. If the signal from any bearing deviates by a present magnitude value, an alarm signal is generated and transmitted to a central monitoring location. The signals from each bearing are uniquely identified by a code. Light emitting diodes are installed close to the bearings and light up to indicate overheating. The electric power for the system is generated by an electromagnetic generator, which responds to the vibrations of the moving car.

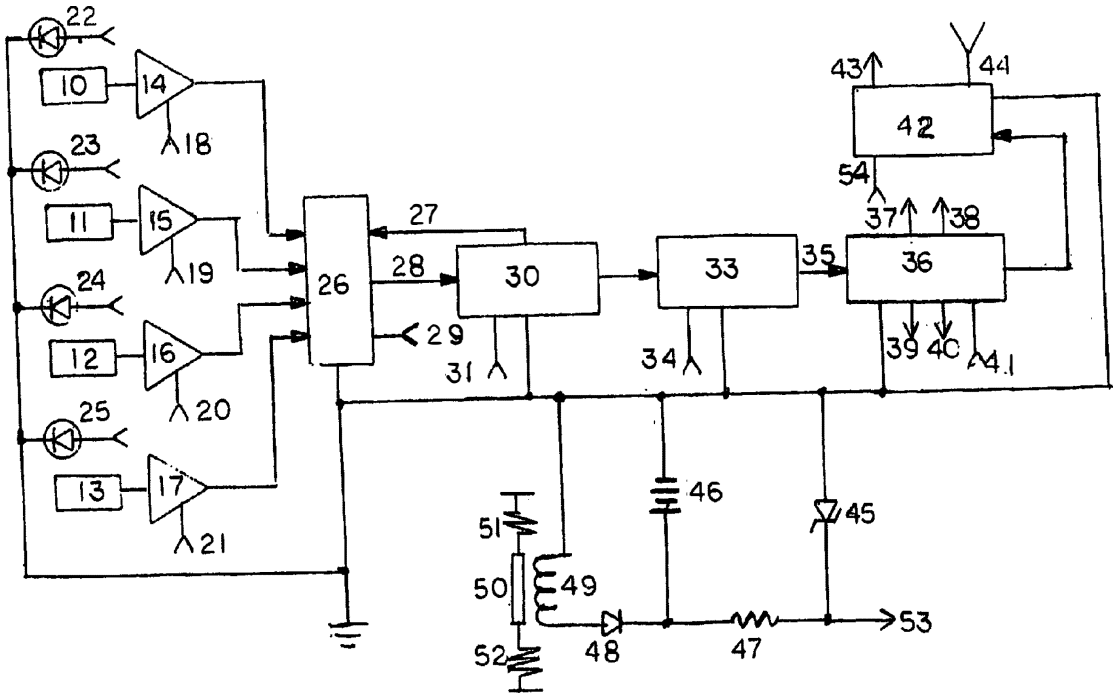

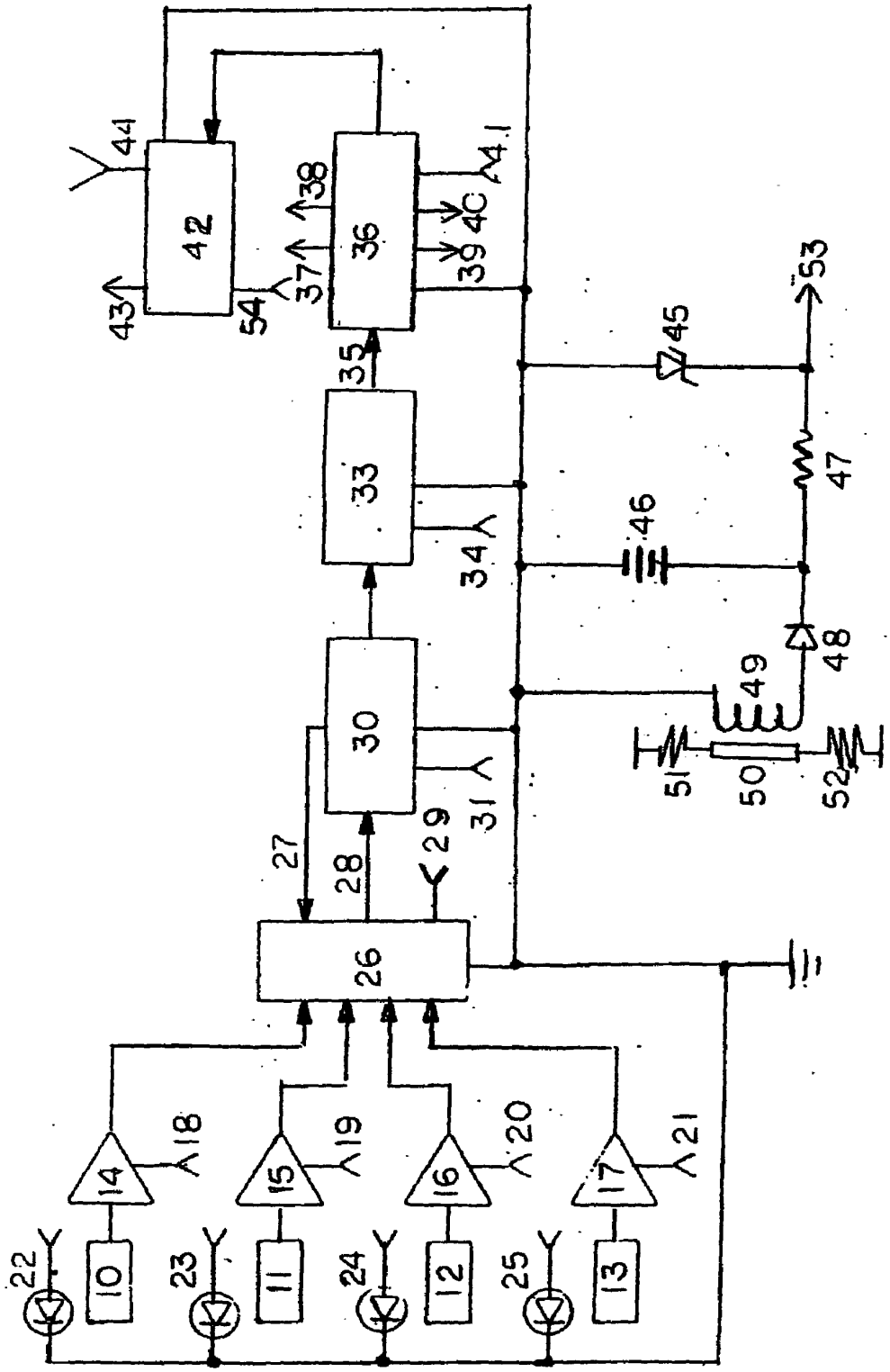
10
11
12
13
14
15
16
17
18
19
20
21
22
23
24
25
26
27
28
29
30
31
33
34
35
36
37
38
39
40
41
42
43
44
45
46
47
48
49
50
51
52
53
54

FIG. 1

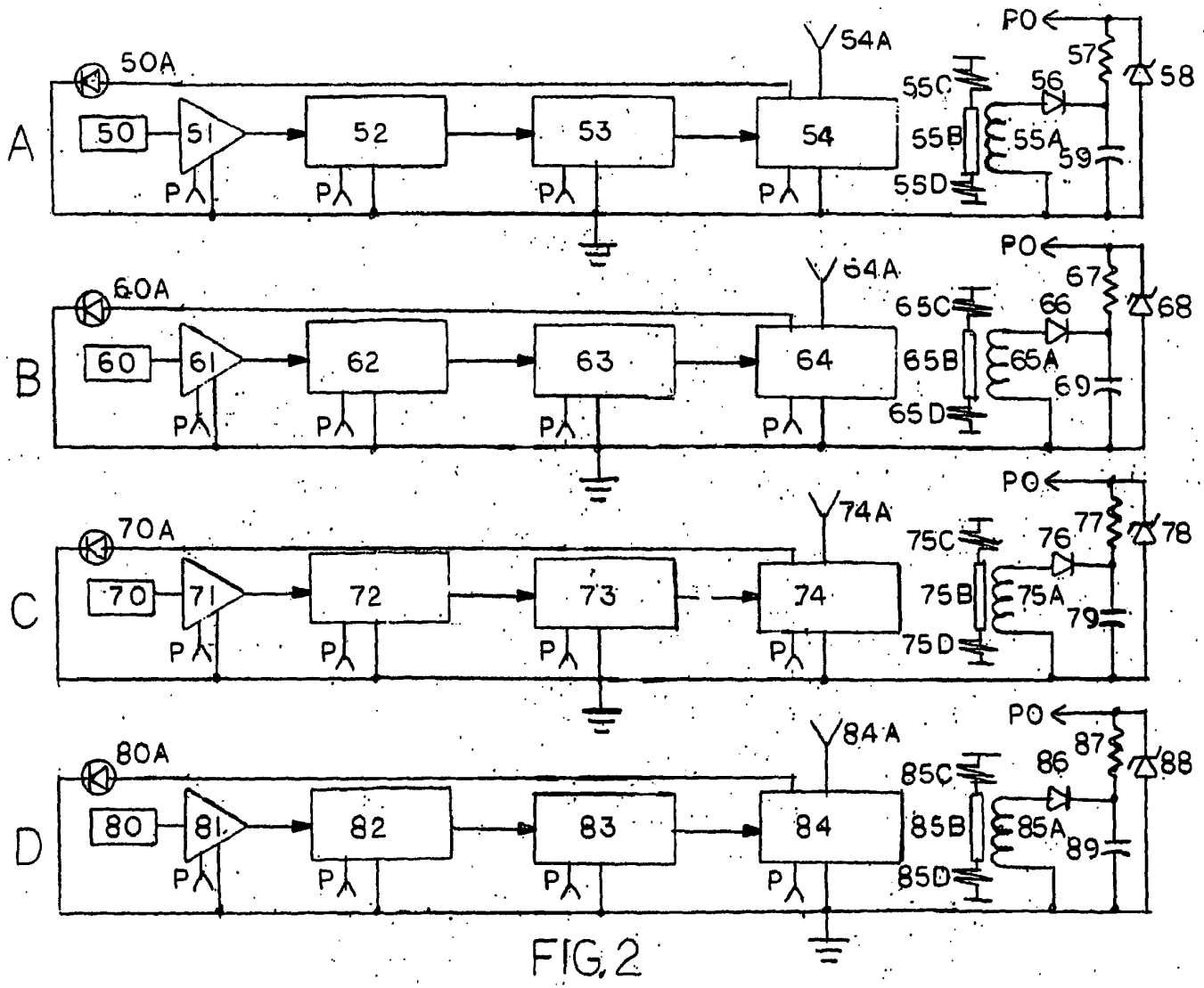
A
B
C
D
50A
60A
70A
80A
50
60
70
80
51
61
71
81
52
62
72
82
53
63
73
83
54
64
74
84
54A
64A
74A
84A
55A
55B
55C
55D
65A
65B
65C
65D
75A
75B
75C
75D
85A
85B
85C
85D
56
66
76
86
57
67
77
87
58
68
78
88
59
69
79
89
P
PO

FIG. 2

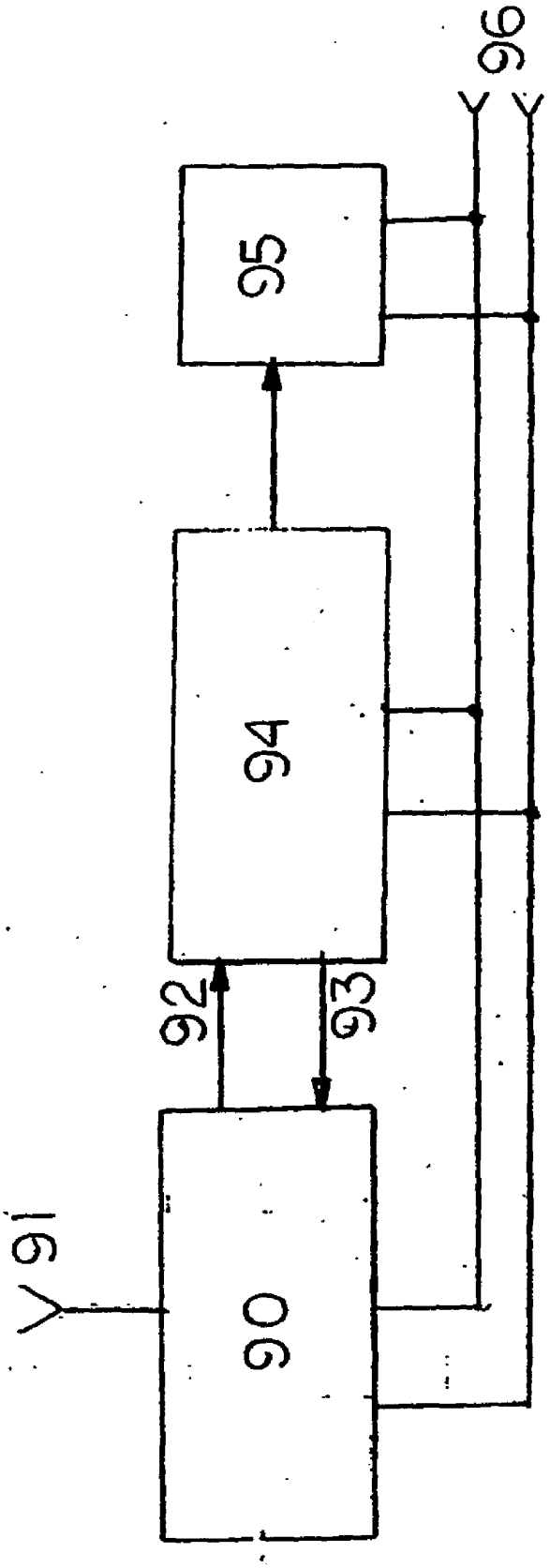

FIG.3

SYSTEM FOR MONITORING THE TEMPERATURE OF WHEEL BEARINGS IN RAILROAD CARS

[0001] This application claims priority to my provisional application 60/550,432 filed Mar. 8, 2004, which by this reference is incorporated herein.

FIELD OF INVENTION

[0002] The instant invention relates generally to systems for detecting defects in wheel bearings of railroad car due to overheating by monitoring the temperature of such bearings.

BACKGROUND OF THE INVENTION

[0003] Overheating of wheel bearings in railroad cars can lead to serious accidents if not noticed before major damage occurs. The Office of Safety Analysis of the Federal Railroad Administration reports that during the period between January and November 2003 there have been 1,477 train accidents attributable to equipment defects and failures. In fact, 180 of such incidents were directly related to bearing or breaks failures (See "Federal Railroad Administration, 2003 Report on Train Accidents due to Equipment Failures"). Such accidents are especially dangerous when they involve passenger carriages and freight cars carrying hazardous cargo, such as explosives and nuclear waste.

[0004] A system for detection of overheating in wheel bearings, aside of its value as a means for preventing accidents, injuries and deaths, would also allow for rail cars' maintenance schedule to be implemented in a timely fashion—an opportunity for cost-saving.

[0005] Federal Railroad Administration's "Rolling Stock program" places emphasis on the development and improvement of equipment defect detection via wayside and onboard systems. Such systems promote early defect detection and help prevent derailments due to equipment failure. They also permit condition-based maintenance of car and locomotive components."(See "Federal Railroad Administration, Railroad Research and Development Program, Section 4.3 Rolling Stock and Components")

[0006] The advent of inexpensive and reliable sensors, microprocessors and electronics makes such automated systems for detection of overheating practical and cost-effective.

SUMMARY OF THE INVENTION

[0007] It is a feature of he present invention to provide an on-board system for railroad cars and carriages, which detects and provides signals that alert responsible personnel to incidents of bearing overheating and identify the location of the overheated bearings.

[0008] The system provided by the invention improves heretofore-proposed systems such as disclosed in U.S. Pat. Nos. 3,629,572; 3,697,744; 3,731,087; 3,812,343; and 4,659,043, which include the wayside systems relying on detection of infrared signatures from overheated bearings. The present invention provides an on-board system, which is continuously operating thereby enabling real time detection of bearing failures due to lack of lubrication or mechanical defects as evidenced by overheating. The wayside IR detectors also frequently suffer from poor sensitivity; are widely spaced so that they may not detect an overheated bearing in time to prevent an accident; are not responsive to scanning bearings of cars wherein several (say, three) different sizes of wheels are employed; are prone to falsely respond to sources of IR radiation other than the car bearings.

BRIEF DESCRIPTION OF THE DRAWINGS

[0009] **FIG. 1** is a block diagram of a system for detection of overheating in wheel bearings of railroad cars in accordance with the invention.

[0010] **FIG. 2** is a block diagram of another embodiment of the system for detection of overheating in wheel bearings of railroad cars in accordance with the invention.

[0011] **FIG. 3** is a block diagram of a central monitoring station for the system depicted in **FIG. 2**.

DETAILED DESCRIPTION

[0012] With reference to **FIG. 1**, temperature sensors **10**, **11**, **12**, and **13** are installed in close proximity to the bearings of each of the wheels of a railroad car or carriage. Railroad cars usually have four axles and eight wheels, however, only the sensors for four wheels are shown; the sensors for all eight wheels are identical. The sensors generate electrical signals analog to the temperature of these bearings. The signals are amplified by the amplifiers **14**, **15**, **16**, and **17** and passed on to a multiplexer module **26**, which contains a solid state switching circuit that continuously cycles, serially selecting inputs from amplifiers **14**, **15**, **16**, and **17** and directing the signals from these inputs to the output **28**. The cycling is controlled by the clock signals from the module **30** via line **27**.

[0013] Module **30** is an A/D converter that converts the signals analog to the bearing temperature into digital data. Module **30** also contains a digital clock and a circuit for imparting a string of code that identifies the bearing where the information originates. The digital data comprise information on the temperature of the bearings and the bearing I.D. code. The data from module **30** (consisting of four groups of temperature readings and accompanying codes) are fed into the comparator module **33**. This module contains a microprocessor or logic programmed to temporarily store several consecutive temperature readings from each bearing and compute the average temperature values of these readings. The module **33** continuously compares the magnitudes of the averaged temperature data from the four sensors **10**, **11**, **12**, and **13** with the temperature data from each sensor for each cycle of four groups of temperature data and generates an overheating alarm signal if and when it determines that the temperature data from one of the bearings indicates that the temperature exceeds by a preset limit value the average temperature from all four or just the other three bearings. As a result, false alarms are prevented that could be generated in hot weather conditions raising the temperature in all wheel bearings; the effects of any spurious signals are also suppressed. Module **33** also attaches the I.D. code generated in the module **30** corresponding to the overheated bearing to any alarm signal, thus identifying the specific bearing, which is overheating.

[0014] The alarm signal is input into module **36**, which acts as a demultiplexer and causes one of the outputs **37**, **38**,

39, or **40** corresponding to an overheated bearing to activate one of the LEDs **22**,**23**, **24**, or **25**. The LEDs are mounted at a convenient location near the carriage or vehicle wheels and are intended to facilitate visual determination of a defective bearing, i.e., which of the bearings had overheated. Other types of signaling devices could also be used instead of LEDs.

[**0015**] The data from the module **36** are also entered into the transmitting module **42**, which transmits via the antenna **44** the alarm signal to a central monitoring station in the locomotive. Alternately the alarm signals can be transmitted via a wire link to the central monitoring station from the terminal **43**.

[**0016**] The system is self-powered to simplify the installation. The magnet core **50** of the solenoid coil **49** in the power generator is suspended on springs **51** and **52** and moves vertically up and down as the carriage or the vehicle moves. As a result, electric current is generated in the coil of the solenoid **49**. The current is rectified by the diode **48**, used to charge the battery **46** and to pass through the resistor **47** to the zener diode **45**, which maintains the voltage at the desired level of, say, five volts. The terminal **53** is connected to terminals **18**, **19**, **20**, **21**, **29**, **31**, **34**, **41**, and **54** to provide power to the system. Alternately, the system could be powered from the power bus of the railroad car or carriage or other vehicle.

[**0017**] The temperature sensors may be thermocouples, thermistors, fiber optic temperature sensors, and other types, though thermistors and fiber optic sensors have two advantages over thermocouples in this application in that they do not require a reference (cold) junction and are generally more rugged.

[**0018**] **FIG. 2** depicts another embodiment of the system. Separate but identical modules A, B, C, and D are installed in the proximity of the railroad car or carriage bearings. The railroad cars have four axles and eight wheels, however, only the sensor modules for four wheels are shown; the sensor modules for all eight wheels are identical. Each module is self-contained and self-powered, thus there are no wired connections between the modules, which in some cases may facilitate the installation of the monitoring system.

[**0019**] Each module comprises temperature sensors **50**, **60**, **70**, and **80**, installed in close proximity of the wheel bearings. The analog signals from these sensors are amplified in **51**, **61**, **71**, and **72**; then the amplified signals are passed to the A/D converters **52**, **62**, **72**, and **82**. The digitized signals are input, respectively, into modules **53**, **63**, **73**, and **83** where a digital code identifying each particular bearing is generated and attached to the signal string. Next, the signals are fed into transceivers **54**, **64**, **74**, and **84**, which transmit the data to the central monitoring station depicted in **FIG. 3**. Modules **54**, **64**, **74**, and **84** also receive signals from the central monitoring station when an overheated bearing is detected. When such a signal is received, modules **54** through **84** activate the respective LEDs **50**A, **60**A, **70**A, and **80**A that are situated close to the wheel bearings to provide visual indication of a fault.

[**0020**] Each module is equipped with a power generator **55-58**, **65-68**, **75-88**, and **85-88**, as described with reference to **FIG. 1** that provides the electric power to the components of each module A, B, C, and D. If a car or a carriage has more than four wheels, the appropriate number of modules would be installed.

[**0021**] Referring now to **FIG. 3**, which shows in a block diagram format the central monitoring station, module **90** is a transceiver which received signals from the remote modules A, B, C, and D of **FIG. 2**, and transmits signals back to these modules when an overheated bearing is detected, thus activating the appropriate LED. The signals from all remote modules are input via terminal **92** into the control module **94**, which temporarily stores and averages the digital signals received from each module and compares these averaged values to each other. If the magnitude of one of the values exceeds a preset level, an alarm is initiated. The alarm is visually displayed on the display module **95** and alarm sound is generated. In addition, the control module **94** sends a signal back to transceiver module **90**, which transmits a signal to one of the modules, A, B, C, or D to activate the corresponding LED. Power to the central monitoring station is supplied via terminals **96**.

I claim:

1. A system for detection of overheating in wheel bearings of vehicles having a plurality of bearings comprising temperature sensors situated in close proximity of said plurality of wheel bearings, said temperature sensors responding to the temperature in said bearings and generating electrical signals representative of said temperature, means for processing said signals, and for generating alarm signals identifying overheated one or more of said bearings when the temperature of one or more of said plurality of bearings as compared to the averaged temperature representing signals from other of said plurality bearings of the same vehicle exceeds a preset value, and means responsive to said alarm signals for identifying the location of the bearings responsible for said signals exceeding preset value.

2. A system according to claim 1 in which said means for processing signals comprise:

means for amplifying said temperature-representing signals,

means for temporarily storing a plurality of said temperature representing signals from each said bearing and computing the average value of the magnitudes of said stored temperature representing signals

means for comparing said average value of said temperature representing signals with value of temperature representing signals originating in said temperature sensors signals from all other wheel bearings, generating an alarm signal when the difference between said values of said temperature representing signals from any said sensors in proximity to said one or more of said bearings exceeds by a preset value said average value,

means for generating a unique code identifying the specific location of said overheated bearing, and

means for utilizing said code with said alarm signal to identify overheating in one or more of said plurality of bearings.

3. A system according to claim 1 in which a central monitoring station receives the information from said identifying means and generates a display of the fault location and also generates a visual and audio signal to alert the

responsible personnel to the fact that a fault in one or more of said wheel bearings has been detected.

4. A system according to claim 1 in which said temperature sensors are selected from the group consisting of thermocouples, thermistors, fiber optic temperature sensors, resistance temperature sensors, and diode temperature sensors.

5. A system according to claim 1, further comprising means for transmitting said signals as alarm indicating data.

6. A system according to claim 5 wherein means responsive to said data facilitates visual indication of a said overheated bearing is installed in close proximity of said bearings.

7. In a system according to claim 6 wherein said means, which facilitate visual indication are light emitting diodes included in proximity of each of said bearings.

8. A system according to claim 1 further comprising means for providing the electric power for energizing said system including electromagnetic generator electromagnetic generator in which a magnetic core is vertically suspended by springs within a solenoidal coil, said core moves up and down in response to the vibrations incurred by said cars as they travel over the rails, said coil in response generating electric current, or piezoelectric means used to generate electric current to power said system components.

9. A system for detection of overheating in wheel bearings in a railroad car or other vehicle having a plurality of wheel bearings comprising individual temperature-sensing modules situated in close proximity of each of said wheel bearings, said temperature-sensing modules responding to the temperatures of said bearings and generating electrical signals representative of said temperatures, called temperature responsive signals hereinafter TRS, means for processing said TRS and for generating alarm signals when the TRS for one or more of said plurality of bearings exceeds a preset value as compared to the TRS from the other of said plurality of bearings thereby providing data identifying overheating one of said plurality of bearings and their location and for display or transmission.

10. A system according to claim 9 in which said means for processing said signals comprise

means for amplifying said signals.

means for digitizing said signals

means for generating codes identifying a particular module and attaching said code to said digitized signals thus producing a composite digital signal

means for transmitting said composite signal to a central monitoring station and activating said display comprising light-emitting diodes situated near each of said temperature-sensing modules.

11. A system according to claim 9 in which each said temperature-sensing module includes a electromagnetic generator or a piezoelectric generator which provides power to said modules.

12. A system according to claim 10 in which said central monitoring station comprises

means for receiving and transmitting signals from and to said temperature-sensing modules,

means for processing said signals, and

means for displaying said alarm signals.

13. A system according to claim 9 in which said means for processing said signals temporarily stores said signals from each said temperature-sensing modules, computes averages of said stored signals, compares the magnitudes of said averaged signals to each other, and generates said alarm signal if one of said averaged signals exceeds the other averaged signals by a preset value of their magnitude.

* * * * *