UNITED STATES PATENT AND TRADEMARK OFFICE

BEFORE THE PATENT TRIAL AND APPEAL BOARD

HUM INDUSTRIAL TECHNOLOGY, INC.

Petitioner

v.

AMSTED RAIL COMPANY, INC.

Patent Owner

Case IPR2023-00539

Patent No. 9,981,673

PATENT OWNER'S RESPONSE

TABLE OF CONTENTS

Page

I. Overview Of The ’673 Patent and Its File History 1

A. Prosecution History 1

B. Priority Date of the ’673 Patent.....2

II. Level Of Ordinary Skill in The Art 3

III. Claim Construction.....3

A. “A Heuristic” and “Heuristically Analyzing” 4

B. “Nominal [Operating Conditions]” 4

C. “Severity Level” 5

IV. ARGUMENT.....8

A. Ground One: Petitioner has failed to show that Claims 1–7, 10–18, and 20–22 are unpatentable under 35 U.S.C. § 103(a) over Lefebvre.....8

1. Claim 1 – Lefebvre does not assign severity levels.....8

2. Claim 10 16

3. Claim 14 - Lefebvre does not determine if an actual failure exists nor apply statistical analysis techniques to sensor data..17

4. Claims 21 21

B. Ground Two: Petitioner has failed to show a reasonable likelihood that Claims 8 and 9 are unpatentable under 35 U.S.C. § 103(a) over Lefebvre in view of Barone.....21

C. Ground Three: Petitioner has failed to show a reasonable likelihood that Claims 1, 2, 4, 6–11, and 13 are unpatentable under 35 U.S.C. § 103(a) over Armitage 22

1. Armitage is not prior art to the ’673 Patent 22

2. Claim 1 47

3. Claim 10 51

D. Ground Four: Petitioner has failed to show a reasonable likelihood that Claims 3, 5, 12–18, and 20–22 are unpatentable under 35 U.S.C. § 103(a) over Armitage in view of Lefebvre.....54

1. Claims 3, 5, and 13 54

2. Claim 12 54

3. Claim 14 55

4. Claim 21 61

V. Conclusion 62

TABLE OF AUTHORITIES

Page(s)

Cases

Apple Inc. v. Voip-pal.com, LLC.,
No. IPR2016-01201, Paper 54 (PTAB Nov. 20, 2017) 51

Arctic Cat Inc. v. GEP Power Prod., Inc.,
919 F.3d 1320 (Fed. Cir. 2019) 47

Arendi S.A.R.L. v. Apple Inc.,
832 F.3d 1355 (Fed. Cir. 2016) 14

Bd. of Regents of the Univ. of Tex. Sys. v. BENQ Am. Corp.,
533 F.3d 1362 (Fed. Cir. 2008) 19

Cooper v. Goldfarb,
154 F.3d 1321 (Fed. Cir. 1998) 31

Crocs, Inc. v. ITC,
598 F.3d 1294 (Fed. Cir. 2010) 62

Dynamic Drinkware, LLC v. Nat'l Graphics, Inc.,
800 F.3d 1375 (Fed. Cir. 2015) 23

Google LLC v. Jawbone Innovations, LLC,
IPR2022-00888, Paper 12 (PTAB Nov. 28, 2022) 19

Institut Pasteur v. Focarino,
738 F.3d 1337 (Fed. Cir. 2013) 62

InTouch Techs., Inc. v. VGO Commc'ns, Inc.,
751 F.3d 1327 (Fed. Cir. 2014) 12

Knorr v. Pearson,
671 F.2d 1368 (C.C.P.A. 1982) 31

Kridl v. McCormick,
105 F.3d 1446 (Fed. Cir. 1997) 24

Mahurkar v. C.R. Bard, Inc.,
79 F.3d 1572 (Fed. Cir. 1996) 46

Markforged Inc. v. Continuous Composites Inc.,
IPR2022-00679, Paper 24 (Sept. 23, 2023).....12

Medichem, S.A. v. Rolabo, S.L.,
437 F.3d 1157 (Fed. Cir. 2006) 30

Medtronic, Inc. v. Teleflex Innovations S.À.R.L.,
68 F.4th 1298 (Fed. Cir. 2023) 32

Motorola Mobility LLC v. Intellectual Ventures II LLC,
IPR2014-00504, Paper 84 (PTAB Mar. 13, 2020).....23

Mycogen Plant Sci. v. Monsanto Co.,
243 F.3d 1316 (Fed. Cir. 2001) 23

Mylan Pharms. Inc. v. Research Corp. Techs., Inc.,
914 F.3d 1366 (Fed. Cir. 2019) 16

O2 Micro Int'l Ltd. v. Beyond Innovation Tech. Co.,
521 F.3d 1351 (Fed. Cir. 2008) 6

Otsuka Pharm. Co. v. Sandoz, Inc.,
678 F.3d 1280 (Fed. Cir. 2012) 52

Perfect Surgical Techniques, Inc. v. Olympus Am., Inc.,
841 F.3d 1004 (Fed. Cir. 2016). 47

Price v. Symsek,
988 F.2d 1187 (Fed. Cir. 1993) 24, 30

Purdue Pharma L.P. v. Boehringer Ingelheim GMBH,
237 F.3d 1359 (Fed. Cir. 2001) 23

Rambus Inc. v. Rea,
731 F.3d 1248 (Fed. Cir. 2013) 62

Renishaw PLC v. Marposs Societa' per Azioni,
158 F.3d 1243 (Fed. Cir. 1998) 7

Scott v. Finney,
34 F.3d 1058 (Fed. Cir. 1994) 31, 32

Singh v. Brake,
222 F.3d 1362 (Fed. Cir. 2000) 24

Tyco Healthcare Grp. LP v. Ethicon Endo-Surgery, Inc.,
774 F.3d 968 (Fed. Cir. 2014) 24

WBIP, LLC v. Kohler Co.,
829 F.3d 1317 (Fed. Cir. 2016) 62

Statutes

35 U.S.C. § 102 23

35 U.S.C. § 102(a) 22

35 U.S.C. § 102(e) 22

35 U.S.C. § 103(a) 8, 21, 22, 54

Other Authorities

37 C.F.R. §42.65(a) 18

U.S. Pat. No. 6,339,397 1

U.S. Patent No. 9,365,223 1

U.S. Patent No. 9,981,673 .....*passim*

EXHIBIT INDEX

Ex #	Exhibit Description
2001	Expert Declaration of Dr. Michael Shamos in support of Patent Owner's Preliminary Response
2002	*Curriculum Vitae* for Dr. Michael Shamos
2003	Joint Claim Construction Chart - Amsted Rail Company, Inc., v. Hum Industrial Technology, Inc., et al., Civil Action No. 4:22-cv-00445-AGF (E.D. Mo. March 31, 2023) ("District Court Claim Construction Chart")
2004	Prosecution history of U.S. App. No. 13/842,427 (the '427 Application) which is issued as U.S. Pat. No. 9,365,223
2005	Prosecution History of U.S. App. No. 13/105,293 to Armitage ("Armitage Prosecution History")
2006	*Reserved*
2007	*Reserved*
2008	*Reserved*
2009	*Reserved*
2010	Expert Declaration of Dr. Michael Shamos in support of Patent Owner's Response CONFIDENTIAL
2011	Internet Archive Capture of https://www.merriam-webster.com/dictionary/level, dated May 4, 2012, available at https://web.archive.org/web/20120504202949/https://www.merriam-webster.com/dictionary/level, last visited Sept. 29, 2023
2012	Internet Archive Capture of https://www.merriam-webster.com/dictionary/fault, dated May 11, 2012, available at https://web.archive.org/web/20120511011453/https://www.merriam-webster.com/dictionary/fault, last visited Sept. 29, 2023
2013	Declaration of Andrew Martin CONFIDENTIAL
2014	Declaration of Jay Monaco
2015	2010-03-18 B. Wilson Email CONFIDENTIAL

2016	2010-03-24 B. Wilson Email CONFIDENTIAL
2017	IONX Information from the Edge CONFIDENTIAL
2018	Metadata for IONX Information from the Edge Ex. 2017
2019	2010-03-31 B. Wilson Email CONFIDENTIAL
2020	2010-04-04 A. Martin Email CONFIDENTIAL
2021	2010-04-03 R. Bury Email CONFIDENTIAL
2022	2010-04-08 W. Lefebvre Email CONFIDENTIAL
2023	2010-04-06 B. Wilson Email CONFIDENTIAL
2024	2010-04-06 A. Martin Email CONFIDENTIAL
2025	2010-04-07 B. Wilson Email CONFIDENTIAL
2026	2010-04-06 M. Lehmer Email CONFIDENTIAL
2027	2010-04-07 B. Wilson Email CONFIDENTIAL
2028	2010-04-07 A. Martin Email CONFIDENTIAL
2029	March 2010 ARX Engineering Status CONFIDENTIAL
2030	2010-04-08 B. Cantwell Email CONFIDENTIAL
2031	2010-04-13 W. Lefebvre Email CONFIDENTIAL
2032	2010-04-12 R. Adamec Email CONFIDENTIAL
2033	2010-04-14 B. Yates Email CONFIDENTIAL
2034	2010-04-15 A. Martin Email CONFIDENTIAL

2035	April 2010 ARX Engineering Status CONFIDENTIAL
2036	2010-05-11 A. Zagouris Email CONFIDENTIAL
2037	2010-05-12 A. Martin Email CONFIDENTIAL
2038	2010-05-12 A. Martin Email CONFIDENTIAL
2039	2010-05-18 A. Martin Email CONFIDENTIAL
2040	2010-03-26 M. Lehmer Email CONFIDENTIAL
2041	2010-03-28 B. Wilson Email CONFIDENTIAL
2042	2010-07-02 A. Martin Email CONFIDENTIAL
2043	2010-06-01 C. Tarawneh Email CONFIDENTIAL
2044	2010-06-01 A. Martin Email CONFIDENTIAL
2045	May 2010 ARX Engineering Status CONFIDENTIAL
2046	2010-06-11 C. Tarawneh Email CONFIDENTIAL
2047	2010-06-02 A. Martin Email CONFIDENTIAL
2048	June 2010 ARX Engineering Status CONFIDENTIAL
2049	2010-07-19 B. Wilson Email CONFIDENTIAL
2050	2010-07-19 A. Martin Email CONFIDENTIAL
2051	2010-07-27 A. Martin Meeting Invite CONFIDENTIAL
2052	2010-08-02 R. Bury Email CONFIDENTIAL
2053	July 2010 ARX Engineering Status CONFIDENTIAL

2054	2010-04-07 B. Wilson Email CONFIDENTIAL
2055	2010-04-12 A. Martin Email CONFIDENTIAL
2056	2010-04-12 A. Martin Email CONFIDENTIAL
2057	2010-04-30 A. Martin Email CONFIDENTIAL
2058	2010-03-31 A. Martin Email (via B. Wilson email address) CONFIDENTIAL
2059	2010-05-06 A. Martin Email CONFIDENTIAL
2060	2010-05-04 A. Martin Email CONFIDENTIAL
2061	2010-05-17 A. Martin Email CONFIDENTIAL
2062	2010-05-20 A. Martin Email CONFIDENTIAL
2063	2010-05-21 J. Kypuros Email CONFIDENTIAL
2064	2010-05-21 A. Martin Email CONFIDENTIAL
2065	2010-05-24 J. Kypuros Email CONFIDENTIAL
2066	2010-06-14 J. Kypuros Email CONFIDENTIAL
2067	2010-06-22 J. Kypuros Email CONFIDENTIAL
2068	2010-06-25 J. Kypuros Email CONFIDENTIAL
2069	2010-06-25 C. Tarawneh Email CONFIDENTIAL
2070	2010-06-29 J. Kypuros Email CONFIDENTIAL
2071	2010-06-29 J. Kypuros Email CONFIDENTIAL
2072	2010-07-06 A. Martin Email CONFIDENTIAL

2073	2010-07-13 A. Martin Email CONFIDENTIAL
2074	2010-07-14 J. Kypuros Email CONFIDENTIAL
2075	2010-07-24 C. Tarawneh Email CONFIDENTIAL
2076	2010-08-03 W. Lefebvre Email CONFIDENTIAL
2077	2010-08-03 C. Tarawneh Email CONFIDENTIAL
2078	2010-08-18 C. Tarawneh Email CONFIDENTIAL
2079	2010-08-24 J. Kypuros Email CONFIDENTIAL
2080	August 2010 ARX Engineering Status CONFIDENTIAL
2081	2010-08-25 C. Tarawneh Email CONFIDENTIAL
2082	2010-08-31 A. Martin Email CONFIDENTIAL
2083	2010-09-01 B. Wilson Email CONFIDENTIAL
2084	2010-09-20 C. Taraneh Email CONFIDENTIAL
2085	2010-10-06 A. Martin Email CONFIDENTIAL
2086	2010-10-19 C. Tarawneh Email CONFIDENTIAL
2087	2010-10-29 J. Kypuros Email CONFIDENTIAL
2088	2010-10-6 A. Martin Email CONFIDENTIAL
2089	2010-04-12 A. Martin Email CONFIDENTIAL
2090	Metadata for Glossary-Sept_2008 attached to Ex. 2047
2091	2010-04-12 M. Lehmer Email CONFIDENTIAL

2092	*Reserved*
2093	2010-11-01 A. Martin Email CONFIDENTIAL
2094	2010-11-01 C. Tarawneh Email CONFIDENTIAL
2095	2010-11-03 J. Kypuros Email CONFIDENTIAL
2096	2010-11-04 C. Tarawneh Email CONFIDENTIAL
2097	2010-11-08 C. Tarawneh Email CONFIDENTIAL
2098	2010-11-09 C. Tarawneh Email CONFIDENTIAL
2099	2010-11-05 A. Martin Email CONFIDENTIAL
2100	2010-11-06 A. Martin Email CONFIDENTIAL
2101	2010-11-08 M. Reed Email CONFIDENTIAL
2102	2010-11-08 A. Martin Email CONFIDENTIAL
2103	2010-11-26 C. Tarawneh Email CONFIDENTIAL
2104	2010-12-08 A. Martin Meeting Invite CONFIDENTIAL
2105	2010-12-01 A. Martin Email CONFIDENTIAL
2106	2010-12-06 C. Tarawneh Email CONFIDENTIAL
2107	2010-12-06 C. Tarawneh Email CONFIDENTIAL
2108	2010-12-18 C. Tarawneh Email CONFIDENTIAL
2109	2010-12-21 W. LeFebvre Email CONFIDENTIAL
2110	2011-01-05 J. Kypuros Email CONFIDENTIAL

2111	2011-01-06 J. Kypuros Email CONFIDENTIAL
2112	December 2010 ARX Engineering Status CONFIDENTIAL
2113	2011-01-13 J. Kypuros Email CONFIDENTIAL
2114	2011-02-14 A. Martin Email CONFIDENTIAL
2115	2011-02-14 A. Martin Email CONFIDENTIAL
2116	2011-02-16 A. Martin Meeting Invite CONFIDENTIAL
2117	2011-02-16 C. Tarawneh Email CONFIDENTIAL
2118	2011-02-17 A. Martin Email CONFIDENTIAL
2119	2011-02-17 C. Tarawneh Email CONFIDENTIAL
2120	2011-02-18 C. Tarawneh Email CONFIDENTIAL
2121	2011-02-18 A. Martin Email CONFIDENTIAL
2122	2011-02-21 C. Tarawneh Email CONFIDENTIAL
2123	2011-02-23 J. Kypuros Email CONFIDENTIAL
2124	2011-02-25 C. Tarawneh Email CONFIDENTIAL
2125	2011-03-02 A. Martin Meeting Invite CONFIDENTIAL
2126	2011-03-15 A. Martin Email CONFIDENTIAL
2127	2011-03-30 A. Martin Email CONFIDENTIAL
2128	2011-03-30 B. Wilson Email CONFIDENTIAL
2129	2011-03-30 W. LeFebvre Email CONFIDENTIAL

2130	2011-04-07 A. Martin Email CONFIDENTIAL
2131	2011-04-08 B. Wilson Email CONFIDENTIAL
2132	2011-04-14 C. Tarawneh Email CONFIDENTIAL
2133	2011-04-21 - A. Martin Email CONFIDENTIAL
2134	2011-04-20 J. Kypuros Email (forwarded to W. Lefebvre) CONFIDENTIAL
2135	2011-04-27 J. Kypuros Email (forwarded to W. Lefebvre) CONFIDENTIAL
2136	*Reserved*
2137	2011-05-04 C. Tarawneh Email CONFIDENTIAL
2138	2011-05-09 C. Tarawneh Email CONFIDENTIAL
2139	2011-05-16 C. Tarawneh Email CONFIDENTIAL
2140	2011-05-18 J. Kypuros Email CONFIDENTIAL
2141	2011-06-01 C. Tarawneh Email CONFIDENTIAL
2142	2011-06-15 C. Tarawneh Email CONFIDENTIAL
2143	2011-06-15 C. Tarawneh Email CONFIDENTIAL
2144	2011-06-15 C. Tarawneh Email CONFIDENTIAL
2145	2011-06-15 C. Tarawneh Email CONFIDENTIAL
2146	2011-06-22 J. Kypuros Email CONFIDENTIAL
2147	2011-07-06 J. Kypuros Email CONFIDENTIAL
2148	2011-07-08 A. Martin Email CONFIDENTIAL

2149	*Reserved*
2150	2011-07-13 J. Kypuros Email CONFIDENTIAL
2151	2011-07-19 J. Kypuros Email CONFIDENTIAL
2152	2011-07-20 W. LeFebvre Email CONFIDENTIAL
2153	2011-07-27 C. Tarawneh Email CONFIDENTIAL
2154	2011-08-02 A. Martin Email CONFIDENTIAL
2155	Boomerang_Fall21_InfoSheet
2156	Hum Company Overview_Feb21
2157	Exhibit 15 to Declaration of Ryan Miller ISO Opposition to Motion to Stay Pending IPR - Hum's Preliminary Counter-Infringement Contentions dated December 9, 2022
2158	Expert Declaration of Dr. Michael Shamos in support of Patent Owner's Motion to Amend
2159	Default Protective Order
2160	Declaration of Andrew Martin REDACTED Public version of Exhibit 2013
2161	Expert Declaration of Dr. Michael Shamos in support of Patent Owner's Response REDACTED Public version of Exhibit 2010

Patent Owner Amsted Rail Company, Inc. ("PO") submits this Patent Owner Response to the Petition for Inter Partes Review ("IPR") filed against U.S. Patent No. 9,981,673 ("the '673 Patent"). Petitioner failed to establish by a preponderance of the evidence that any claim of the '673 Patent is unpatentable.

I. OVERVIEW OF THE '673 PATENT AND ITS FILE HISTORY

The '673 Patent issued on May 29, 2018, filed as U.S. Patent App. No. 15/158,018 ("the '018 Application") on May 18, 2016. Ex. 1002, 55. The '018 Application is a continuation of U.S. Pat. App. No. 13/842,427 ("the '427 Application"), which issued as U.S. Patent No. 9,365,223. The '018 Application also claims priority to U.S. Provisional Application No. 61/661,661 ("the '661 Provisional"), filed on June 19, 2012. Ex. 1013. Additionally, the '018 Application, like the '427 Application, is a continuation-in-part of Application No. 12/861,713 ("the '713 Application"), filed August 23, 2010. Ex. 1014.

A. Prosecution History

In a non-final Office Action, the Examiner rejected the pending claims of the '018 Application over the combination of U.S. Pat. Pub. No. 2008/0195265 to Searle ("Searle"), Official Notice, and U.S. Pat. No. 6,339,397 to Baker ("Baker"). Ex. 1002, 106-120. The Examiner acknowledged that Searle does not disclose "determining high level alarms based on data and alarms collected from said communication management unit" and instead relied on Official Notice in view of

Baker stating "Baker is introduced to teach determining high level alarms based on data and alarms collected." *Id.*, 109-10.

In reply to the non-final Office Action, PO explained that Baker, like Searle, is directed to a binary system in which an alert is sent if a change in orientation of a measured component is greater than a predetermined parameter or threshold. Ex. 1002, 424-425; Ex. 1008, ¶72 Ex. 1009, 2:54-63; 3:60-63; 4:9-5:24. There is nothing in Baker that quantifies the severity of the measured condition in Baker. *Id.* PO referenced the '018 Application's specification, ¶42 and explained that "determining an alarm condition based on the assigned severity level avoids an excess of stoppages and delays that could result if an alarm was generated for every deviation that is detected.". Ex. 1002, 425; Ex. 1001, 12:40-65. The Examiner issued a notice of allowance explaining that "the closest prior art of record" fails to teach or suggest the subject matter encompassed by limitations 1(b)-1(d). Ex. 1002, 493-94. This history demonstrates that the basic threshold analysis of Searle and Baker was not equivalent to the claimed severity levels and an alarm notification that indicates the seriousness of this quantification is transmitted, i.e., the requirements of limitations 1(b)-1(d) of independent claim 1.

B. <u>Priority Date of the '673 Patent</u>

The '673 Patent is a Pre-AIA first-to-invent patent. Both the '427 Application and the '661 Provisional were filed prior to the effective date of the AIA and thus

are subject to the pre-AIA rules. Ex. 1001, (60), (63); Ex. 1002, 108, 493. The Challenged Claims have written description support in the '661 Provisional and are thus entitled to its effective filing date, as acknowledged by Petitioner. Petition, 5, 6, 7. As explained in more detail below, the claimed invention of the '673 Patent was conceived at least by April 6, 2010 and was, through reasonable diligence, reduced to practice at least by August 2, 2011. §IV.C.1 *supra* (incorporated here).

II. LEVEL OF ORDINARY SKILL IN THE ART

A person of ordinary skill in the art ("POSA") is a person with at least a B.S. degree in electrical or computer science or a related field, with at least two years' experience with sensing systems for railcars or similar industrial equipment, including familiarity with wireless networks and heuristics and statistical data analysis for failure prediction. Less work experience could be compensated for by a higher level of relevant education, and vice versa. Paper 10, 6; Ex. 2001, ¶¶36-40; 2010, ¶13.

III. CLAIM CONSTRUCTION

In its POPR, PO proposed constructions for three terms: (1) "a heuristic"/"heuristically analyzing", (2) "nominal," as used in the phrase "nominal operating conditions"; and (3) "severity level." Paper 6, 9-12. The Board construed all three terms but did not adopt PO's constructions, instead raising its own *sua sponte*. Paper 10, 6-8. PO responds to each below.

A. **"A Heuristic" and "Heuristically Analyzing"**

The Board interpreted the claim term "heuristic" to mean "a rule, algorithm, function, formula, graphing function, or similar mechanism applied to data to assist in analyzing and/or interpreting the data." Paper 10, 8. Without conceding the Board's construction is correct, PO proceeds for purposes of this Response in accordance with this construction.

B. **"Nominal [Operating Conditions]"**

The Board interpreted the claim term "nominal operating conditions" to mean "normative or expected conditions based on trends, conditions of other components, ambient conditions, and predetermined values." *Id.* As written, the Board's construction is unnecessarily limiting in that it requires expected conditions to be based on all the recited inputs, namely "trends, conditions of other components, ambient conditions, and predetermined values." Ex. 2010, ¶29. It is possible the Board intended its construction to include one or more of these inputs and read "trends, conditions of other components, ambient conditions, ***or*** predetermined values." Further, the inclusion of the word "normative" finds no support in the specification and neither Petitioner nor the Board provide citation to any evidence of record to support its inclusion. *Id.* Instead, the construction that most aligns with the intrinsic evidence, and the one a POSA would adopt upon reviewing the specification of the '673 Patent, is "expected conditions based on at least one of

trends, conditions of other components, ambient conditions, and predetermined values." *Id.*, ¶¶29-30.

C. "Severity Level"

The Board interpreted the claim term "severity level" to mean "a type of fault that requires a particular action" Paper 10, 8. The Board provided little support, and it is unclear what the Board's basis is, for its construction of "severity level." Nonetheless, this construction is incorrect for several reasons. First, when substituted into the claim language, this construction does not make sense: "assigning [a type of fault that requires a particular action] to said deviations from nominal operating conditions." Ex. 2010, ¶¶31-33. A "level" is not a fault and a "severity level" is not a type of fault. *Id.* ¶34. As relevant to this claim term, Merriam-Webster defines "level" as "a position in a scale or rank (as of achievement, significance, or value)." Ex. 2011. The same source defines "fault" as "a physical or intellectual imperfection or impairment." Ex. 2012. In fact, there are no definitions of the two terms that are interchangeable. Ex. 2011; 2012; Ex. 2010, ¶34. Further, in the specification the term "fault" only appears in relation to certain heuristics and is not used in the description of severity levels. Ex. 1001, 2:15-22, columns 7-12 (table); 12:48-65; 13:30-14:3; Ex. 2010, ¶34-35. This indicates that the Board's apparent equating of "level" and "fault" is incorrect. In any case, it is unclear how a "type of fault" can be assigned in the manner claimed in Challenged Claim 1, for

example. Therefore, it does not further the purpose of claim construction—to clarify and explain—and cannot be correct. *O2 Micro Int'l Ltd. v. Beyond Innovation Tech. Co.*, 521 F.3d 1351, 1362 (Fed. Cir. 2008).

Second, a "level" in the context of the Challenged Claims is one of a plurality of discrete levels of some known value or, as PO argued in the POPR, "one from a plurality of known values indicating seriousness" of the deviation. Paper 6, 11, Ex. 2010, ¶35. The '673 patent teaches "the ability to ***determine the severity of detected conditions*** to determine if immediate alarms should be raised to facilitate human intervention." Ex. 1001, 2:15-22 (emphasis added). The '673 patent further teaches that an "action required to be taken by the locomotive driver varies ***based on the severity of the alert***." *Id.*, 11:44-46 (emphasis added). Finally, the '673 patent teaches "leveled alarms" which range from "Stage 1" identifying an alarm condition that need only be sent to base station for logging and future reference to "Stage 4" which requires immediate action to stop the train and perform emergency maintenance. *Id.*, 13:30-14:3; 12:56-65 (discussing "tiered alarm levels"). Finally, the explicit claim language requires the assigning of a severity level to particular deviations from nominal operating conditions. Ex. 2010, ¶¶33-34. A POSA would understand these passages and claim language to mean that the "severity level" assigned in limitation 1(c) is one of a plurality of severity levels. *Id.*

During prosecution of the ’673 Patent, PO referenced the ’018 Application’s specification, explaining that “determining an alarm condition based on the assigned severity level avoids an excess of stoppages and delays that could result if an alarm was generated for every deviation that is detected.” Ex. 1002, 425; Ex. 1001, 12:40-65. This intrinsic explanation is consistent with the meaning proposed by PO and is contrary to the construction proposed by the Board. More importantly, it is in “accord with the words chosen by the patentee to stake out the boundary of the claimed property.” *Renishaw PLC v. Marposs Societa’ per Azioni*, 158 F.3d 1243, 1248 (Fed. Cir. 1998).

Thus, the proper construction of “severity level” is “one of a plurality of known values indicating seriousness.” Limitation 1(c), in turn, means “assigning [one of a plurality of known values indicating seriousness] to said deviations from nominal operating conditions.” Ex. 2010, ¶32. This construction is consistent with the specification and the rest of the intrinsic record, is consistent with all extrinsic evidence, and above all makes logical and grammatical sense in the context of the claim language itself. *Id.*, ¶¶31-37. The Board’s construction is none of those.

IV. ARGUMENT

A. Ground One: Petitioner has failed to show that Claims 1–7, 10–18, and 20–22 are unpatentable under 35 U.S.C. § 103(a) over Lefebvre

1. Claim 1 – Lefebvre does not assign severity levels

Lefebvre fails to disclose, teach, or suggest "assigning a severity level to said deviations from nominal operating conditions," and the step of "determining an alarm condition based on said assigned severity level," as recited by limitations 1(c) and 1(d). Ex. 2010, ¶¶38-40. As explained above, Applicant successfully argued these limitations were distinguishable over Searle and Baker. §I.B, *supra.* (incorporated here); Ex. 1002, 424-426 (explaining ¶42 of the specification, Ex. 1001, 11:46-60, provides that an "assigned severity level avoids an excess of stoppages and delays that could result if an alarm was generated for every deviation that is detected"). These limitations are patentable over Lefebvre for substantially similar reasons.

As explained in the POPR and above, the phrase "assigning a severity level" means "assigning one from a plurality of known values indicating seriousness." Paper 6, 11; §III.C, *supra.* (incorporated here). The use of the claimed severity level enables the system, and the operators receiving the alerts from the system, to assess and evaluate the ***health*** of the monitored component on a non-binary scale. Ex. 2010, ¶41; Ex. 1001, 12:44-46 ("The ***action required*** to be taken by the locomotive driver

varies based on the severity of the alert.") (emphasis added); 13:30-14:3 (describing "various levels of alarms, based on severity, and the appropriate response").

Lefebvre, in contrast, merely discloses the transmission of "relevant attributes and timing" in response to various described "irregularities in behavior." Lefebvre, ¶¶54-55; Ex. 2010, ¶41. A POSA would not consider Lefebvre to disclose "assigning a severity level" at least because Lefebvre only teaches a binary system in which (a) an alarm is issued if the magnitude is sufficient; or (b) no alarm is issued if the threshold is not exceeded, i.e., a single threshold. In fact, Petitioners arguments explicitly acknowledge that Lefebvre simply "distinguishes between (a) deviations from expected operating conditions that ***are not*** severe enough to raise an alarm; and (b) deviations that ***are*** severe enough to raise an alarm." Petition, 23; Ex. 2010, ¶¶40-41. There are no levels; it is either severe or it is not. Ex. 2010, ¶¶41-42. Thus, Petitioner acknowledges Lefebvre does not meet the plain language of limitation 1(c). *Id.*, ¶40. Put simply, Lefebvre merely establishes a simple threshold limit that when exceeded results in the instrumented pads sending messages to the data control unit. Lefebvre, ¶55. In fact, **<u>no</u>** severity level is assigned in Lefebvre; it either raises an alarm or does not and only does so if the inferred behavior passes a single pre-defined threshold. *Id.*, ¶41.

The cooperation between limitations 1(b)-1(d) of claim 1 recite that, once a deviation is determined, the deviation is quantified and assigned an appropriate

severity level based on a seriousness of the deviation, and an alarm condition commensurate with the seriousness of the assigned severity level is determined. Limitations 1(b)-1(d); Ex. 2010, ¶42. In Lefebvre, there is no such assignment indicating seriousness of the measured unsatisfactory behavior on a ranked scale of seriousness. Ex. 2010, ¶42; Lefebvre, ¶¶57-66. Rather, Lefebvre monitors bearing defects (Lefebvre ¶¶58-59), wheel defects (*Id.* ¶60), wheel derailment (*Id.* ¶61), truck hunting (*Id.* ¶62), displaced roller bearing adapters (*Id.* ¶64), and brake performance and status (*Id.* ¶65) to determine if sensor data has crossed a threshold limit, and, if so, an alarm is sent. Ex. 2010, ¶42. Lefebvre does not assign multiple levels of significance for the measured conditions and report unsatisfactory behavior in the form of alarms taking into account these multiple threshold levels. *Id.*, ¶43.

Nor does Lefebvre disclose using "algorithm heuristics to convert or correlate data measured at instrumented pads 16 to operating conditions (e.g., loads, frequencies, forces) that are compared to thresholds and alarm levels to identify deviations from expected operating conditions" Ex. 2010, ¶45. The Board's citation to paragraph 58 of Lefebvre (which neither Petitioner nor its expert cite to with regard to claim 1) is simply insufficient to show the claimed features of limitations 1(c) and 1(d). Rather, paragraph 58, when read in the context of the entire disclosure of Lefebvre, merely discloses a comparison with a singular threshold needed to raise an alarm. Lefebvre, ¶58 ("A temperature sensor in instrumented pad 16 monitors

relative changes in temperature against other bearings and provides ***an*** alarm threshold or long-term trends to link to bearing condition."); Ex. 2010, ¶44. This does not imply any level of severity ***on which the alarm is based***. *Id.* The issued claims of Lefebvre '218 also confirm this understanding. Ex. 1015 claim 7, claim 12 ("said values being communicated **only** upon a determination by the logic circuitry that the values are indicative of a potential operating failure"), claim 28 ("communicating to the prime mover messages identifying **only** the performance behavior sufficient to cause alarm"), and claim 30. And identifying the risk condition is not the same as assigning a severity level. Ex. 2010, ¶42. The Petition fails to show Lefebvre, in view of the skill of a POSA, discloses multiple levels of interest for a measured condition such that an operator could discern the health of a component rather that whether it merely met a threshold. Ex. 2010, ¶43.

Finally, Ground 1 is an obviousness ground and requires that the Petitioner prove that a POSA would have been motivated to modify Lefebvre to arrive at the claimed invention, without regard to the inventor's own disclosure in hindsight. To do this, Petitioner must show by a preponderance of the evidence that a POSA would read Lefebvre's disclosure, which does not disclose the claimed "severity level" and arrive at claimed limitations 1(c) and 1(d). It does not.

Petitioner argues that "Lefebvre discloses every element of [the challenged claims]." Petition, 18. In fact, Petitioner never argues that a POSA's ordinary

creativity or common sense would supply any elements missing from Lefebvre's disclosures. As explained above, Lefebvre does not include at least the claimed "assigning a severity level" element of limitation 1(d) and none of the evidence Petitioner presents cures this fatal deficiency. For example, Petitioner's expert opines that "a PHOSITA could have, and would have, combined ***the teachings of Lefebvre***," thus clarifying that no argument exists for combining Lefebvre with any teaching outside of the four corners of Lefebvre. Ex. 1003, ¶67. The remaining statements are also insufficient to support any combination of Lefebvre with elements missing from its disclosure. ¶68 ("A PHOSITA could have followed the teachings of Lefebvre to arrive at the claimed systems and devices with a reasonable expectation of success."); ¶69 ("[I]t is my opinion that a PHOSITA could have made any required adjustments or modifications to Lefebvre's disclosed systems and sensors with a reasonable expectation of success and without undue experimentation."). General statements of what a POSA "could" do, rather than a specific explanation of what a POSA would be motivated to do, are insufficient to support an obviousness determination. *InTouch Techs., Inc. v. VGO Commc'ns, Inc.*, 751 F.3d 1327, 1353-54 (Fed. Cir. 2014) (declining to credit expert testimony that did not "provide any meaningful explanation for ***why one of ordinary skill in the art would be motivated to combine*** these references at the time of this invention") (emphasis added); *Markforged Inc. v. Continuous Composites Inc.*, IPR2022-00679,

Paper 24 (Sept. 23, 2023) (such a general statement at best "indicates that a modification could be made, and not what a skilled artisan would have been motivated to make"); Ex. 2010, ¶46.

With regard to limitation 1(c), the passages of Lefebvre cited in the Petition do not contain any disclosure of any component of its system "assigning a severity level" to any detected behavior. Ex. 2010, ¶39. Neither Petitioner nor its expert cite or point to any such disclosure. *Id.* And neither provide any specific explanation for how a POSA would arrive at that limitation using only Lefebvre's disclosure and ordinary skill. As explained above, what is described in the cited paragraphs is a binary decision, to send a message or not. Ex. 2010, ¶¶40-41, and discussion *supra*. In short, Petitioner seeks to write "assigning a severity level" out of the claim entirely and replace it with "assign a threshold" to match its claim interpretation with Lefebvre.

Regarding limitation 1(d), both Petitioner and its expert, in verbatim identical passages, rely almost exclusively on a single disclosure that Lefebvre's data control unit checks if a railcar or its components are "behaving sufficiently poorly" such that a report is required. This is insufficient to supply the missing "based on said assigned severity level" element.

Petitioner offers only general statements that are insufficient to provide the required rational underpinning for an obviousness determination. For example,

Petitioner's expert states that "the elements [of the challenged claims] are all well known in the art, and would have been well understood by a [POSA]," citing to his general discussion of the technological background. Yet simply asserting something is "well known" or "well understood" is insufficient to explain ***why*** a POSA would make the proposed modification, especially when the element is not supplied by any of the references. *Arendi S.A.R.L. v. Apple Inc.*, 832 F.3d 1355, 1365 (Fed. Cir. 2016) (notwithstanding the "broader notion of searching for data in a database," petitioner "failed to show why it is proper to extrapolate from this general background knowledge of searches in a database to add" a specific type of search to a reference). Obviousness requires a showing of a specific reason to supply a missing element from general knowledge and not what could be done generally in the abstract. *Id.*, 1363 ("In cases in which 'common sense' is used to supply a missing limitation, as distinct from a motivation to combine, moreover, our search for a reasoned basis for resort to common sense must be searching."). Otherwise, Petitioner is merely applying improper hindsight.

The Board went beyond any argument proffered by the Petition to state that "Lefebvre sends alarms to locomotives, a central data handling site, an owner, or operator based on the severity level, i.e., how poorly a component is behaving." Paper 10, 18 (citing Lefebvre, ¶¶52, 95; Petition, 24). Lefebvre never discloses this at all. A review of the cited paragraphs of Lefebvre confirms this point. Paragraph

52 merely recites that an "alarm message must get through from any railcar to the locomotive or to the remote data handling service as quickly as possible" but says nothing about sending messages based on severity. Ex. 2010, ¶44. Paragraph 95 states that the disclosed data control unit "performs the assessments described above for the inference engine to check if the freight car, its trucks or wheels or axles are behaving sufficiently poorly that a report to the central data handling location or owner or operator or locomotive is needed." This, again, says nothing about sending a message based on severity, but rather discloses a simple threshold consisting of "severe" and "all's well." By definition, if a condition is not severe, there is no severity level. *Id.* Thus, Lefebvre does not disclose the claimed severity ***levels***.

As explained above, the key advance in the "severity level" limitation is to provide information to operators regarding the ***level*** of health of the components of the railcar. At no point does Petitioner or the Board explain why a person of ordinary skill reading Lefebvre would change the content of the alert message that gets sent ***for the same detected defect*** (i.e., "based on the severity level"). Ex. 1001, 12:44-46 ("The ***action required*** to be taken by the locomotive driver ***varies based on the severity of the alert***.") (emphasis added). This is not disclosed anywhere in Lefebvre. Because Petitioner has not explained any other source for that element, it cannot meet its burden as to claim 1.

Because Petitioner has not established independent claim 1 is unpatentable over Lefebvre, it has also failed to show that claims 2-7 and 13, dependent from claim 1, are unpatentable. *Id.*, ¶46. *Mylan Pharms. Inc. v. Research Corp. Techs., Inc.*, 914 F.3d 1366, 1376 (Fed. Cir. 2019) ("Dependent claims, with added limitations, are generally not obvious when their parent claims are not.").

2. <u>Claim 10</u>

Lefebvre fails to disclose, teach, or suggest limitation 10(c): "determining if said temperature of the desired part is outside an acceptable range of temperatures." Lefebvre discloses the comparison of "information from all of the trucks on the railcar." §IV.A.1, *supra.* (incorporated here); Ex. 2010, ¶¶48-49; Lefebvre, ¶36. Although Petitioner cites to Lefebvre, ¶33, 58 to support its argument for limitation 10(c), neither of these passages support Petitioner's conclusory argument. The cited passages of Lefebvre are either general statements of purpose that do not disclose any specifics (in the case of ¶33) or disclose features that do not actually meet the language of limitation 10(c). Rather, as with limitation 1(b) above, Lefebvre expressly discloses that the "temperature sensor in instrumented pad 16 monitors relative changes in temperature ***against other bearings***." Lefebvre, ¶58 (emphasis added). Lefebvre is not comparing to an acceptable range of temperatures, it is comparing two sensors to each other. Ex. 2010, ¶49. A POSA would not look to Lefebvre and its disclosure of aggregation of "information from all of the trucks on

the railcar" and comparison of "relative changes in temperature against other bearings" to understand how to determine whether a temperature reading is inside or outside of "an acceptable range of temperatures." Lefebvre, ¶¶36, 58; Ex. 2010, ¶49-51.

Further, since the steps in limitation 10(c) are not performed, then the limitations in 10(d) cannot be either. Ex. 2010, ¶50. Nevertheless, Lefebvre does not disclose monitoring parameters, such as temperature, outside an expected range; it discloses comparing it with other bearings. *Id.*

Petitioner has not established independent claim 10 is unpatentable over Lefebvre. Therefore, Petitioner failed to show that claims 11-12, which depend from independent claim 10, are unpatentable over Lefebvre either. Ex. 2010, ¶51.

3. Claim 14 - Lefebvre does not determine if an actual failure exists nor apply statistical analysis techniques to sensor data

Lefebvre fails to disclose, teach, or suggest limitation 14(b): "heuristically analyzing said received [sensor] data to determine if an actual failure exists on said railcar or to predict potential or imminent failures based on a statistical analysis of said received [sensor] data." A first analysis applies heuristics "to determine if an actual failure exists" and the second analysis applies heuristics for forward looking predictive purposes that are "based on a statistical analysis" of the received sensor data. One aspect of this recitation is the determination of currently detected failures,

i.e., "determine if an actual failure exists." The other aspect of this limitation is the application of higher-level statistical analysis for predicting failures which are not currently detected but may potentially develop in the future. Ex. 2010, ¶53-59.

Petitioner relies almost exclusively upon the disclosure of certain "[e]xamples of performance that [Lefebvre's disclosed] system is capable of monitoring" for allegedly disclosing limitation 14(b). Lefebvre, ¶¶57-66; Petition, 21-22. A POSA would recognize that Lefebvre merely describes certain types of conditions that are directly measured. Lefebvre, ¶58 (emphasis added) (explaining that a "temperature sensor … monitors relative changes in temperature against other bearings … providing ***a direct measurement*** that can be used to avoid false alarms from wayside hotbox detectors."). Petitioner does not explain how the cited portions of Lefebvre's disclosure can be used to determine an "actual failure" or to "predict potential or imminent failures." Petitioner's analysis is entirely conclusory and is replete with hindsight reasoning. Petitioner's expert declaration evidence for limitation 14(b) is a verbatim copy of its conclusory analysis in the petition and provides no additional support. Because conclusory expert testimony is "entitled to little or no weight," Petitioner has failed to meet its burden to establish its obviousness claim. 37 C.F.R. §42.65(a).

Petitioner also relies on the same disclosure in Lefebvre for both heuristic analysis and statistical analysis, ignoring that the different words "heuristics" and

"statistical analysis" are recited in different claim elements. Petition, 36-37. However, "[d]ifferent claim terms are presumed to have different meanings." *Bd. of Regents of the Univ. of Tex. Sys. v. BENQ Am. Corp.*, 533 F.3d 1362, 1371 (Fed. Cir. 2008); *Google LLC v. Jawbone Innovations, LLC*, IPR2022-00888, Paper 12, (PTAB Nov. 28, 2022). For both elements—heuristics and statistical analysis—Petitioner relies on the same disclosure in Lefebvre related to forming an "inference" of a measured condition via an inference engine. Petition, 37. But an "inference" does not require nor necessarily include either heuristics nor statistical analysis, and Petitioner has not explained why the cited disclosure of Lefebvre supplies this missing element. Ex. 2010, ¶¶57. Indeed, Lefebvre is silent regarding any "statistical analysis." The recitation of frequency domain analysis techniques and time series analysis is not statistical, but are merely techniques to transform time waveform data into discrete frequency components, for example by computing a fast Fourier transform. *Id.*, ¶58. Moreover, Petitioner fails to point to any disclosure in Lefebvre that discloses a method utilizing statistical analysis. Petition, 36-37 (not identifying or even applying the words "statistical analysis" to Lefebvre); Ex. 2010, ¶57.

A POSA, reviewing the '673 patent's specification, would understand that any forward-looking predictive analysis must necessarily take into account a sufficient amount of past acquired data to base such predictions on, i.e., a statistical model. Ex. 2010, ¶56. The '673 patent explains: "The CMU is capable of wirelessly collecting

data from each of the motes and performing higher-level analysis of the data to detect imminent or actual failures. During such data analysis, heuristics may be applied to determine potential failures ***based on statistical models*** and empirical data." The '673 patent, Ex. 1001, 2:63-3:1 (emphasis added). As seen in the '673 patent, despite the Board's suggestion, the '673 patent clearly discusses both potential faults and actual failures. Ex. 2010, ¶56; Ex. 1001, 2:32, 2:40, 2:65, 2:67. Accordingly, a POSA familiar with the specification and claims of the '673 patent would recognize that the analysis required by independent claim 14 necessarily involves a higher-level analysis than just the mere aggregation of collected sensor data to form an inference as to a condition of component of a train. Ex. 2010, ¶56. Indeed, the claim also requires that the specific "results of said analysis" must be communicated to an off-railcar location. Limitation 14(c).

Lefebvre is also silent regarding the prediction of "potential or imminent failures based on a statistical analysis of said received data." Ex. 2010, ¶59. Lefebvre simply does not perform, or even disclose, any statistical analysis capable of forming forward looking "predictions" and is solely directed toward measurement of actual conditions. *Id.*; Lefebvre, ¶58-66.

Petitioner has not established that independent claim 14 is unpatentable over Lefebvre. Therefore, Petitioner failed to show that Claims 15-18 and 20, which depend from independent claim 14, are unpatentable. Ex. 2010, ¶60.

4. Claims 21

Lefebvre fails to disclose, teach, or suggest limitation 21(c), specifically the use of heuristics to "(i) determine if an actual failure exists and (ii) to predict potential or imminent failures based on a statistical analysis of said collected data." As explained above, the Petition does not acknowledge the differences between the two clauses of limitation 21(c) and, in any case, Lefebvre fails to disclose any "statistical analysis." IV.B.3.a, *supra* (incorporated here). Further, claim 21 requires both the determination of an actual failure and the prediction of potential or imminent failures. The Petition is silent regarding this distinction in claim scope, which is fatal to Petitioner's argument against claim 21. Ex. 2010, ¶¶61-62. Therefore, Petitioner failed to show that Claim 22, which depends on independent claim 21, is unpatentable either.

B. Ground Two: Petitioner has failed to show a reasonable likelihood that Claims 8 and 9 are unpatentable under 35 U.S.C. § 103(a) over Lefebvre in view of Barone

As explained above Lefebvre fails to disclose, teach, or suggest limitations 1(b), 1(c), and 1(d) of independent claim 1. §IV.B.1, *supra* (incorporated here). Barone, which is merely relied upon by Petitioner for select limitations of dependent claims 8 and 9, fails to cure the deficiencies of Lefebvre with respect to independent claim 1. Ex. 2010, ¶63. As an example, previously mentioned, there are no severity levels disclosed in Lefebvre, and Barone is not relied upon for this limitation. *Id.*

Petitioner has not established that independent claim 1 is unpatentable over Lefebvre. Therefore, Petitioner failed to show that Claims 8 and 9, which depend from independent claim 1, are unpatentable over the combination of Lefebvre and Barone. Ex. 2010, ¶64.

C. Ground Three: Petitioner has failed to show a reasonable likelihood that Claims 1, 2, 4, 6–11, and 13 are unpatentable under 35 U.S.C. § 103(a) over Armitage

Petitioner asserts that Armitage is prior art under "at least 35 U.S.C. §§ 102(a) and 102(e)." Petition, 5. It is neither.

1. Armitage is not prior art to the '673 Patent

The '673 invention was conceived prior to Armitage's May 10, 2011, and diligent work on the invention continued until a reduction to practice at least by August of 2011, and is therefore not prior art.[1] Although Petitioner notes in a single footnote that Armitage claims priority to a provisional filed on May 10, 2010, it did not enter the Armitage provisional into evidence. Thus, neither party nor the Board have sufficient evidence to make any determination as to Armitage's entitlement to its provisional date for purposes of §102(e). Ex. 2010, ¶65. That exercise is

[1] Were the Board to conclude that a reduction to practice occurred earlier than May 10, 2011, the Armitage patent is still not prior art and conception and diligence is irrelevant.

nonetheless irrelevant because the Challenged claims were conceived prior to May 2010 in any case. Ex. 2010, ¶72, App. A; Ex. 2013, ¶¶7-12.

There are two ways for an inventor to prove prior inventorship: "1) it reduced its invention to practice first, or 2) it was the first party to conceive of the invention and then exercised reasonable diligence in reducing that invention to practice." *Mycogen Plant Sci. v. Monsanto Co.*, 243 F.3d 1316, 1332 (Fed. Cir. 2001). In IPRs, "Petitioner bears the burden of persuasion that the challenged claims are unpatentable, which includes the burden of establishing that any reference upon which it relies constitutes prior art under 35 U.S.C. § 102." *Motorola Mobility LLC v. Intellectual Ventures II LLC*, IPR2014-00504, Paper 84, 14-15 (PTAB Mar. 13, 2020). Even if the Board were uncertain about the evidence, Petitioner, the party with the burden, loses. *Dynamic Drinkware, LLC v. Nat'l Graphics, Inc.*, 800 F.3d 1375, 1378-79 (Fed. Cir. 2015).

a. **All Claims of the '673 Patent Were Conceived By At Least March 2010**

"Conception requires proof that the inventor formed in his mind 'a definite and permanent idea of the complete and operative invention, as it is hereafter to be applied in practice.'" *Purdue Pharma L.P. v. Boehringer Ingelheim GMBH*, 237 F.3d 1359, 1365 (Fed. Cir. 2001). While the inventor should have "a specific, settled idea," the inventor "need not know that his invention will work for conception to be

complete [but] need only show that he had the idea....” *Tyco Healthcare Grp. LP v. Ethicon Endo-Surgery, Inc.*, 774 F.3d 968, 975 (Fed. Cir. 2014). There is no particular formula that an inventor must follow in providing corroboration of his testimony of conception. *Kridl v. McCormick*, 105 F.3d 1446, 1450 (Fed. Cir. 1997). Rather, corroboration is determined by a “rule of reason” analysis, in which “[a]n evaluation of all pertinent evidence must be made so that a sound determination of the credibility of the inventor's story may be reached.” *Price v. Symsek*, 988 F.2d 1187, 1195 (Fed. Cir. 1993); *Singh v. Brake*, 222 F.3d 1362, 1367 (Fed. Cir. 2000).

Co-inventors Andrew Martin, William Lefebvre, and Brent Wilson conceived of the invention described and claimed in the ’673 patent to overcome problems with previous technologies, and beginning design a system that would enable bearing temperatures to be continuously (or near continuously) monitored onboard trains. Initial tests of mote designs showed promising results, and the data from these tests directly impacted the conception of algorithm development that would eventually be evaluated, validated, and tested by Amsted at a field trial with SCT Logistics (“SCT”) in Australia. Exs. 2015, 4; 2013, ¶7-9. Simultaneously, comprehensive bearing temperature algorithm validation and testing was also being conducted, at the direction of the Amsted inventors, by a research group at University of Texas-Pan American (“UTPA”) (now University of Texas-Rio Grande Valley). Ex. 2013, ¶9; Ex. 2054. This UTPA testing included validation of Amsted hardware as well

as the teardown and analysis of train hardware in which actual or potential faults were detected. *Id.*

By around March 2010, initial installations were underway for testing with SCT Logistics. Inventor Brent Wilson documented these initial installations for the rest of the team in an email on March 24, 2010, stating that "we did well, finishing 6/10 cars." Exs. 2016; 2013, ¶10. The pictures attached to the email depict the motes attached to the bearing adapter sidewalls of the train cars:

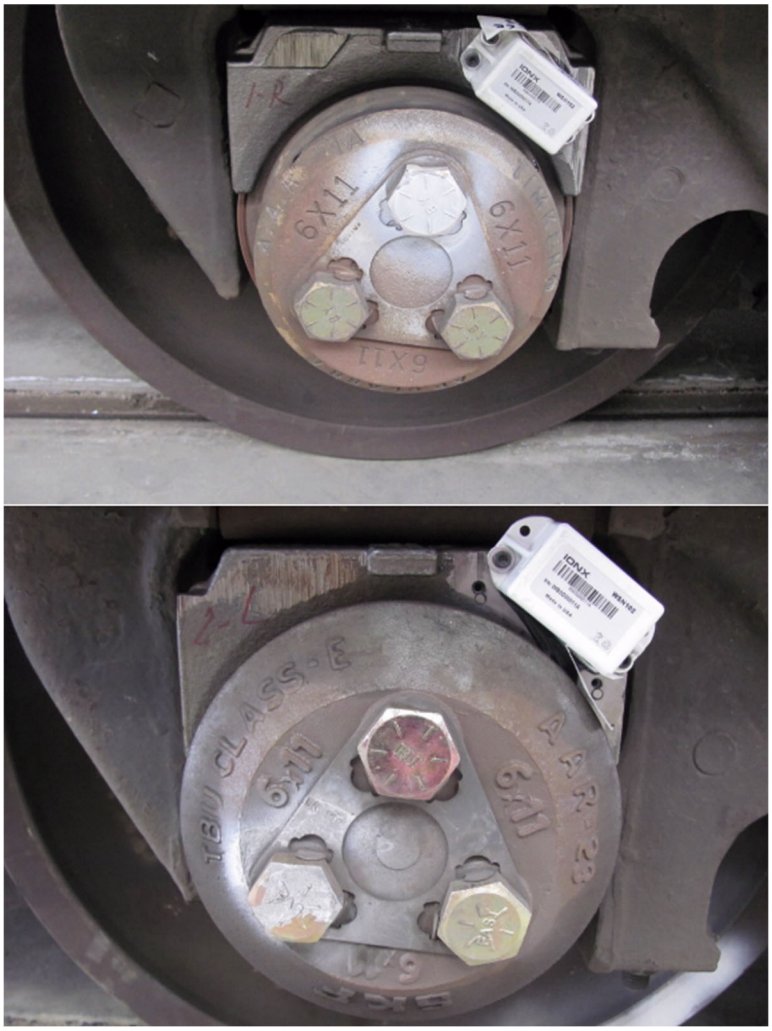

Ex. 2016, 6; 2041 (stating the field trial "has begun as of March 28th"). An internal IONX presentation dated March 21, 2010 includes slides demonstrating how these motes formed a remote wireless mesh network of sensors communicating with a CMU and off-railcar locations using satellites. Exs. 2017, 5, 8, 9; 2018 (metadata corroborating date of Ex. 2017); 2047; 2090 (metadata corroborating date of Ex. 2047). In response to conversations with SCT representatives, the inventors realized that "setting locomotive alarm thresholds at values that are sub-critical will lead to too many stoppages and delays". Exs. 2019; 2013, ¶11. The inventors propose a "revised alarm notification system" having various alarm stages that limit alerts sent to a locomotive terminal until actionable events of sufficient severity occur and which vary depending on how severe the events are. *Id.* The same day, Andrew Martin relayed changes and instructions for the severity levels to be used for triggering alerts. Ex. 2058, 2013, ¶11.

By early April 2010, the Amsted inventors had a definite and permanent idea of the complete invention set forth the '673 Patent as it was intended to be applied in practice, evidenced in a presentation emailed from Andrew Martin SCT Logistics on April 4. Exs. 2020; 2013, ¶12. This presentation includes an illustration that is nearly identical to Figure 6 of the '673 Patent:

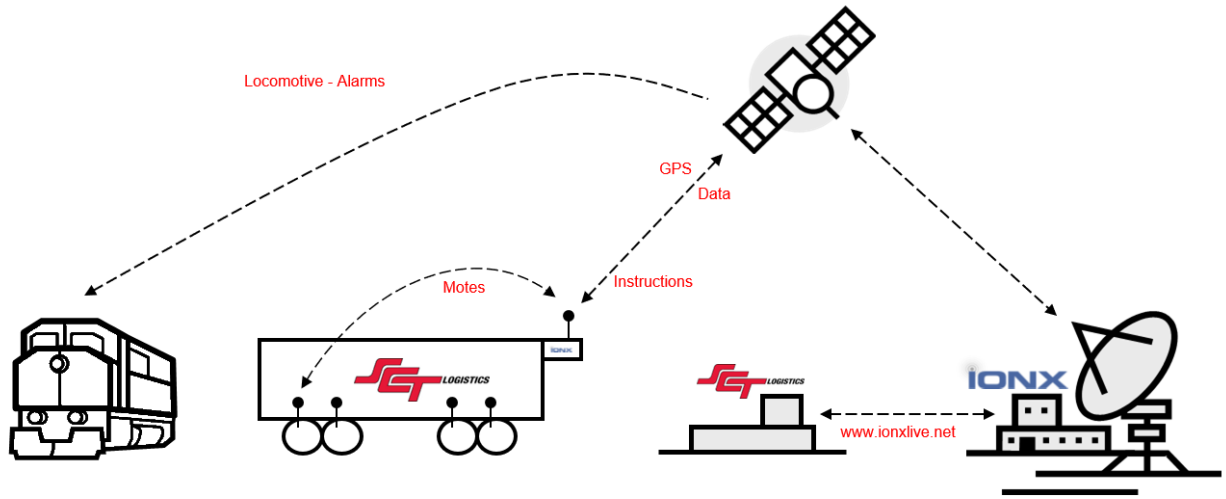

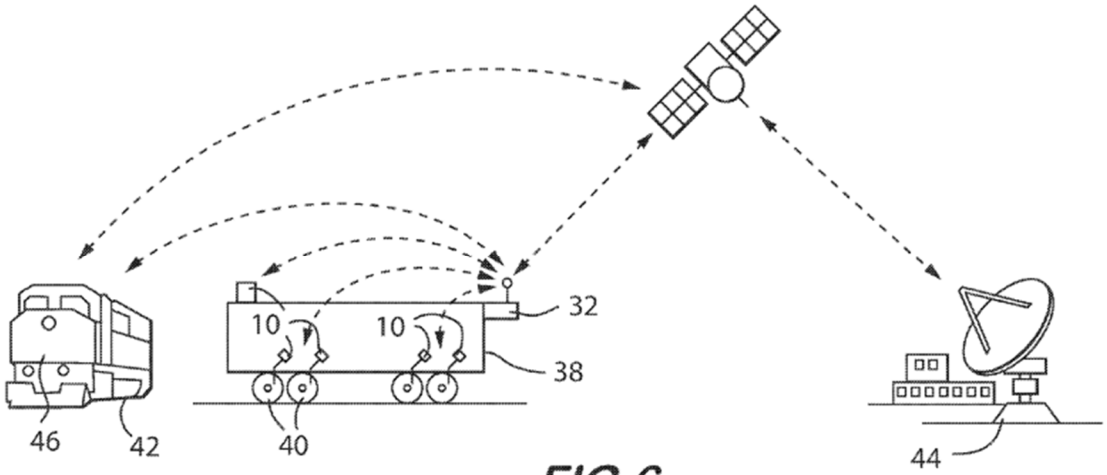

FIG.6

Id. The illustration depicts a method of monitoring railcar performance utilizing a variety of sensors, or motes, attached to the railcar and communication circuitry allowing the motes to wirelessly transmit the sensor readings to a receiver. *Id.*; Ex. 2040. The presentation includes photos of the motes attached to the bearing adapter

sidewalls of train cars like the March 24 photos from Brent Wilson and an alarm system with multi-tiered severity levels as described by Brent Wilson on March 31. *Id.* The presentation also shows a cab display indicating messages determined from applying heuristics to the received data, including the temperature of the bearing, the affected bearing or axle, the alert type, and the car name, demonstrating the ability to communicate alerts in a network with other railcars when the bearing temperature is outside of a certain range:

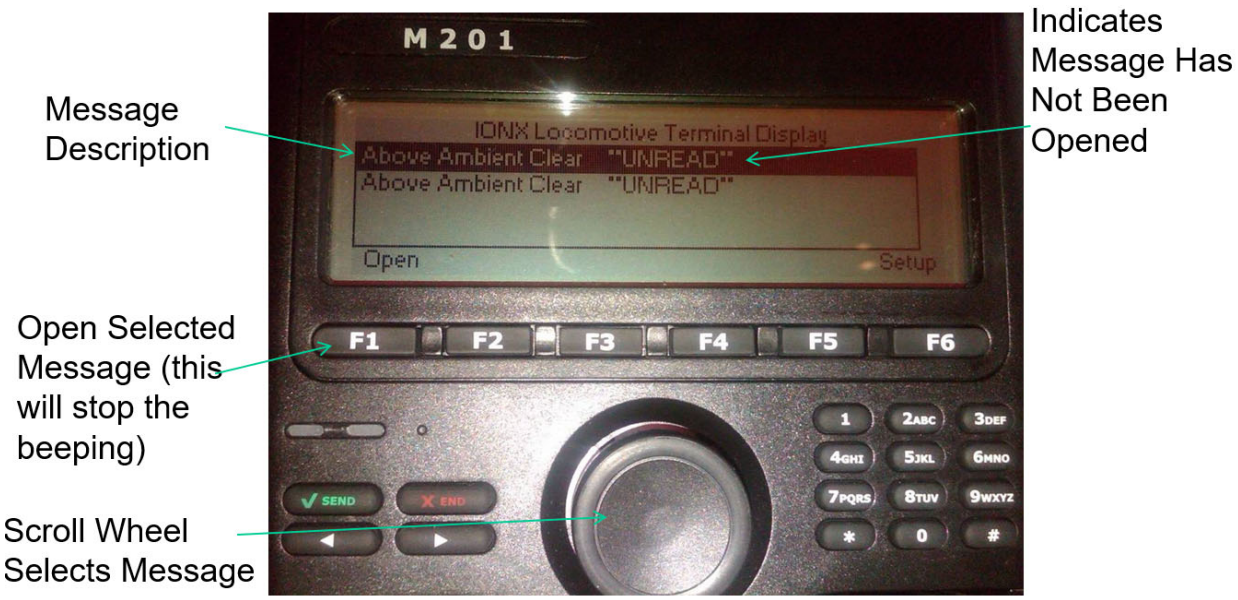

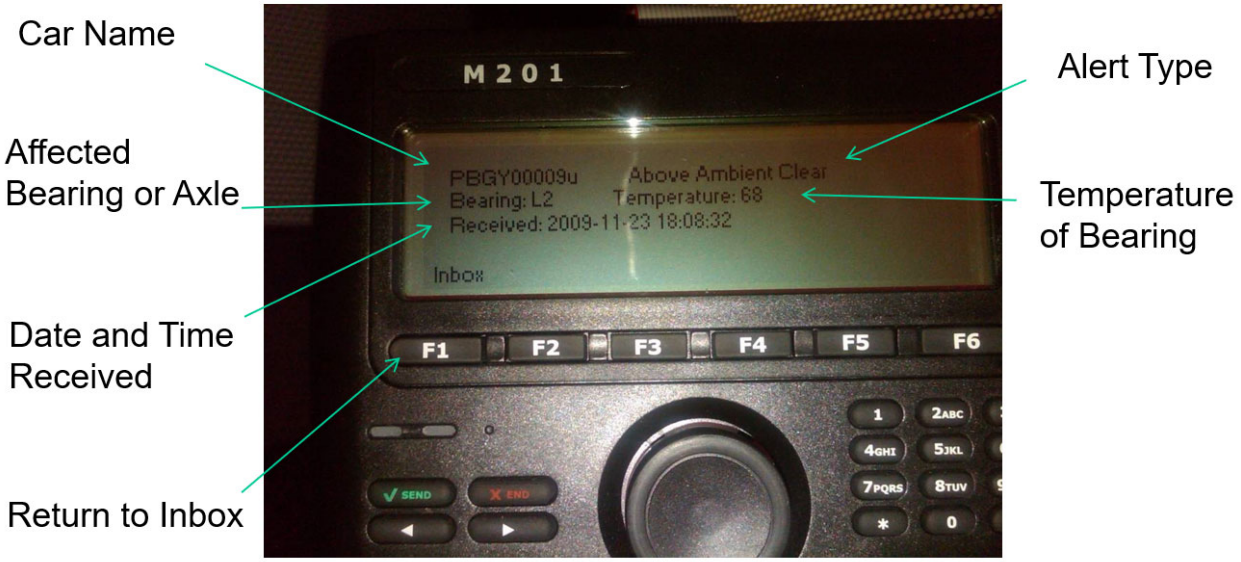

Id.; Ex. 2010, ¶¶71-72.

This provides ample documentary evidence of conception of a specific, settled idea of the invention of the ’673 Patent at least by April 4, 2010. Corroboration of conception, although not required for documentary or physical exhibits, is also provided by non-inventor fact witnesses. *See, e.g.,* Ex. 2021 (April 3 email from Ronald Bury asking for photos of the equipment on the cars to “include in instructions to crews and maintainers, i.e. the motes on the adaptor, the ambient mote the communication unit on the hand brake end and the loco cab equipment.”); Ex. 2020; *Medichem, S.A. v. Rolabo, S.L.*, 437 F.3d 1157, 1169-70 (Fed. Cir. 2006) (finding that corroboration is not required for signed and dated physical exhibits created by the inventors because the “trier of fact can conclude for itself what documents show, aided by testimony as to what the exhibit would mean to one

skilled in the art."). All of the evidence put forth in support of conception, including any corroborated testimony, must be considered as a whole, not individually. *Price*, 988 F.2d at 1195-96 (evidence is sufficient if it "collectively gives the board an abiding conviction that [patent owner's] assertion of prior conception is highly probable") (quotation omitted). Here, conception is also corroborated by the evidence discussed below showing prototyping and testing that resulted in reduction to practice at least by August 2011. When taken as a whole, the evidence set forth by Amsted paints a clear picture that conception prior to the Armitage Patent is at least highly probable. Ex. 2010, ¶72.

b. <u>The Invention Claimed in the '673 Patent Was Reduced to Practice At Least As Early As August, 2011</u>

"[To] establish an actual reduction to practice, the inventor must prove that: (1) he constructed an embodiment or performed a process that met all the limitations of the [claimed invention]; and (2) he determined that the invention would work for its intended purpose." *Cooper v. Goldfarb*, 154 F.3d 1321, 1327 (Fed. Cir. 1998). If testing is needed to demonstrate suitability for an invention's intended purpose, the type and amount of any testing required depends on the nature of the invention, and courts are "guided by a common sense approach when weighing the sufficiency of the testing." *Scott v. Finney*, 34 F.3d 1058, 1061-62 (Fed. Cir. 1994). Sufficient circumstantial evidence of an independent nature can satisfy the corroboration

requirement. *Knorr v. Pearson*, 671 F.2d 1368, 1373 (C.C.P.A. 1982). Furthermore, an actual reduction to practice does not require corroboration for every factual issue contested by the parties. *Cooper*, 154 F.3d at 1330 (rejecting "the notion that each individual act in the reduction to practice of a count must be proved in detail by an unbroken chain of corroboration"). Reduction to practice of method claims occurs when the inventors perform a process that meets the claimed invention and demonstrates that the invention is "suitable for its intended purpose." *Scott*, 34 F.3d at 1061 (Fed. Cir. 1994).

Before the inventions described in the '673 Patent, railcar performance was monitored through the use of wayside detectors and fixed locations throughout the railroad network, or through on-board instrumentation. Ex. 1001, 1:49-67. The intended purpose of the invention of the '673 Patent was to improve "(1) the ability to reliably collect and utilize data from multiple sensors on each railcar; (2) the ability to analyze collected data by the application of heuristics to detect and predict operational deficiencies; and (3) the ability to determine the severity of detected conditions to determine if immediate alarms should be raised to facilitate human intervention." Ex. 1001, 2:15-22; Ex. 2010, ¶70; *Medtronic, Inc. v. Teleflex Innovations S.À.R.L.*, 68 F.4th 1298, 1304 (Fed. Cir. 2023) ("the patents themselves are the most important and… most persuasive evidence of the patents' intended purpose…."). The Amsted team developed numerous tests, awaited their results,

and then applied the results to further improvements and tests. The corroborated evidence here shows that before Armitage was filed, the inventors prototyped and tested a railcar monitoring system and demonstrated that it would work for its intended purpose, beyond a probability of failure, by at least by August of 2011. Ex. 2010, ¶71-72, App. A, B.

i. Initial Prototypes and Tests

Research, development, and testing on the railroad monitoring system was reasonably continuous between April 2010 and August 2011, through both SCT field trials under actual conditions of use and UTPA lab testing, with nearly all of inventor Andrew Martin's working time being spent on making improvements to the design and functionality of the system and perfecting the specific heuristics used to analyze the data. Ex. 2013, ¶13; *Scott*, 34 F.3d at 1062 (Fed. Cir. 1994) (inventions may be tested "under actual conditions of use" or under "laboratory conditions" which may or may not duplicate each and every condition of actual use). The above documented SCT field trial began and continued to provide useful data throughout the critical period that was analyzed to make the bearing temperature algorithms more robust. Ex. 2030; 2013, ¶12, 14-18; 2019; 2020; 2029, 3; §IV.C.1.a, *supra* (incorporated here).

On April 6, 2010, Brent Wilson noted that Amsted would use the information gained from the SCT trial "to make determinations about the longevity of the

bearings that have seen atypically high temperatures" and conservatively utilize "four stage alert levels" in which the "first stage alert will not be broadcast to the locomotive so that it will not cause any undue concern for the drivers." Ex. 2023 (delineating the temperatures that were set for each alarm level); Ex. 2013, ¶16. Andrew Martin also provided his input on the heuristics on April 6, 2010, in an email response to Brent Wilson, discussing various issues he found with triggering thresholds. Ex. 2024. Back and forth email discussions regarding the algorithm instructions to fix frequent alarm levels continued through April 7, 2010. Exs. 2025; 2013, ¶15, 16.

Also on April 6, 2010, non-inventor Matthew Lehmer provided all three inventors with photos of the exterior "locomotive install" at the SCT trial, showing the satellite and GPRS installations. Ex. 2026. On April 7, 2010, inventors Brent Wilson and Andrew Martin also provided photos of the alarm display and a mode on the locomotive and the broader installation. Exs. 2027; 2028.

A progress summary of the SCT field trial was detailed in a presentation developed by Brent Wilson and William Lefebvre on April 8, 2010, which was emailed to Bob Cantwell for internal use. Ex. 2022. Slide 3 of the presentation summarizes the challenges the team were facing, including adapting the solution "to support data logging [of over] ½ million temperature readings/day on 10 cars, [d]aily uploads from Australia to West Chester, Pa, and [c]ommunicating alarms to

locomotive engineer." *Id.*, 4; Ex. 2013, ¶17. Slides 5-9 are photos of the components of the system that was ultimately claimed in the '673 Patent, slide 10 is a chart of the various detected temperatures and associated actions, slides 12-14 provide the data results, and slide 15 outlines the "Next Steps," including further monitoring of the system and collecting more data. *Id.* In response to the presentation, Bob Cantwell sent a congratulatory email, also on April 8th, remarking on the "successful SCT/IONX/Amsted Rail bearing monitoring installation!" Ex. 2030 (noting that "[t]here have only been a handful of breakthrough developments in the Rail industry over the past 30 years, and this is going to be one of the biggest.")

Work on temperature analysis as it pertained to the sensors continued throughout the rest of April, and the team began to work on a procedure for the configuration of temperature settings that enabled the updating of thresholds of all nodes of all units to calibrate the sensors. Ex. 2013, ¶18-19; Exs. 2031; 2032; 2055; 2056; 2089, 2091. These emails also include the team discussing changing the parameter in the algorithm with the values sent from Brent and Andrew and updating the WSNs in the field. Exs. 2013, ¶18, 2031, 2033.

Testing continued through April and the SCT field trial was "well-received and successful to this point." Exs. 2035, 2014, ¶12. Andrew Martin visited UTPA to provide the project plan and detailed instructions regarding the analysis and deliverables that Amsted would expect from UTPA. Exs. 2013, ¶20; 2034; 2057;

2059; 2060. Additional requests were added by email on May 17, 2010 with the expectation that work would begin the week after. Exs. 2013, ¶20, 2061. An email from Andoni Zagouris to Brent Wilson and non-inventor Matthew Lehmer indicated that the motes were "behaving extremely erratic[ly]." Exs. 2036, 2037, 2038. Work continued throughout the rest of the month to resolve these issues. Exs. 2013, ¶20; 2062; 2063; 2064; 2065. Work also continued on correcting the issues SCT had reported in April regarding unwanted bearing alerts to the locomotive displays concluding with successful tests at the end of May. Exs. 2039, 2044.

By the beginning of June 2010, the SCT field trial continued "to report successfully and data is being used to refine algorithms." Exs. 2045; 2048; 2014, ¶14. Testing continued at UTPA, with preliminary results sent on June 1 and with future results promised "weekly." Ex. 2043. Also, on June 1 a "high temperature profile test" was started to calibrate high sensor temperatures with high bearing temperatures. *Id.* On June 11, UTPA emailed Brent Wilson a preliminary teardown report of the bearing pulled from service during the first week of the trial. Ex. 2046. A new calibration curve was provided a few days later. Ex. 2066. On June 22, UTPA provided a presentation with the results from the IONX bearing health monitoring algorithm, identifying three bearings for further review which was accomplished and presented a few days later. Exs. 2013, ¶23, 2067, 2068, 2069, 2070, 2071.

Testing continued through July 2010, as evidenced in an email from Andrew Martin to the team from UTPA on July 2stating that he had not received "the graphs yet of daily max temp differential with average trend lines" and that "after much pains taking manual effort" was able to get updated data for several cars. Ex. 2042. On July 6 and 13, Andrew Martin emailed UTPA updated sets of instructions for the data analysis we required on the SCT data. Ex. 2072; 2073; 2074; 2013, ¶26.

On July 19, Brent Wilson emailed the team about "some curious behavior" regarding one of the bearings identified by the IONX algorithm at the end of June (on railcar 130L) and indicating the bearing would be "pulled for inspection." Exs. 2049; 2067, 2068, 2069, 2070, 2071; 2013, ¶¶23-26. Also on July 19, Andrew Martin sent a report to SCT detailing the first 90 days of the trial. Exs. 2050; 2013, ¶27. This report contains a detailed description of the system previously described in the April 4 presentation, along with photos of the actual components in use. Ex. 2050, 6-9; 2020, 5-9. Additionally, "Alarm Improvements" and "Algorithm Advancements" and results of data analysis are described. Ex. 2050, 13-18. The report ended with a description of "Future Work" including a recommendation that "the trial be extended to continue for an additional 3 months … to focus on all the improvements…, including improved alarms on CMU, improved predictive algorithms, and root cause analysis on field anomalies." *Id.*, 19; 2013, ¶27-28. SCT agreed to continue the trial. Ex. 2053, 3; 2014, ¶16. Field tests continued through the

rest of July. On July 29, Andrew Martin and Brent Wilson updated the meeting tasks which included next steps such as gathering a complete list of all algorithms and metrics, and making a list of various temperature data points. Exs. 2075; 2051.

Throughout August 2010, data from the tests was continually analyzed for improvements to be made to the algorithms, particularly to prevent the triggering of false alarms. Ex. 2013, ¶31. For example, Ronald Bury emailed the inventors on August 1 concerning a triggered alarm, and it was determined that the sensor did not properly update. *Id.*; Ex. 2052, 2-4. Further discussions between the inventors and with UTPA continued throughout the month regarding anomalous bearing temperature readings. Exs. 2076; 2077; 2078; 2079. Also in late August, the team decided to have UTPA examine and test the 130L bearing pulled from service in July by running the bearing to failure. Ex. 2081, 2082, 2083. The inventors reported to Amsted Engineering that "[a] second bearing tripped by our algorithms has been removed from service and is in route to Brenco for analysis." Ex. 2080, 3; 2014, ¶17.

In September 2010, Andrew Martin developed new tasks for the UTPA group while the Amsted programing team continued refining the algorithms. Ex. 2013, ¶32. An update from UTPA regarding the analysis of SCT data was received by the inventors on September 20. Ex. 2084, 2013, ¶32. Brent Wilson traveled to Australia

between September 11 and September 23 and met with members of SCT Logistics staff and identified units that required battery updates. *Id.*, ¶33.

By October 2010, upgraded algorithms were developed for use in the already-installed systems, with the intent of updating those systems with the upgraded algorithms. 2013, ¶34. On October 6, 2010, Andrew Martin emailed Paul Hubbard to inform him that UTPA would "complete the teardown and report by 10/15/2010" and provided UTPA with maintenance logs for the railcars. Exs. 2085; 2088. Later in October, UTPA transmitted a final report regarding the teardown of the 130L bearing. Ex. 2013, ¶34; 2086. UTPA sent updated results of their analysis of SCT data on October 29, 2010 for a conference call planned for that day. Ex. 2013, ¶34, 2087.

Testing continued in November 2010, as IONX considered "other places to put the WSN for measuring bearing temperature." Exs. 2093; 2094; 2013, ¶~~39~~35. Analysis of the bearing test results also continued, and the IONX Update from November 3 emailed from UTPA to Brent Wilson included a detailed analysis of the speed and temperature data for the 130L and 112N railcars. Ex. 2095. There were several emails indicating productivity at UTPA, including a tear down inspection on some bearings from Australia and a notification of a bearing seizing but that "the results we obtained… clearly show that we are on the right track." Exs. 2096; 2097; 2098; 2013, ¶~~39~~35. On November 5, a report that was emailed from Andrew Martin

to the team summarized the trial setup, previous and new results, improved predictive algorithms, and next steps, including "data collection [to] aid in development of future algorithms." Ex. 2099. On November 6, Andrew Martin emailed Tarawneh that "there is a list of 26 bearings that could be considered on our 'watch list' and requesting that UTPA "update this 'top 10' list every 30 days going forward." Ex. 2100.

Martin Reed emailed the Amsted team on November 8 about the importance of continuing to run the bearings to failure, since that would signal "that IONX correctly signaled a distressed bearing" that had then proceeded to failure, indicating a successful product. Ex. 2101. By mid-November, Andrew Martin emailed Brent Wilson and Tom Letsch about an inspection of car PBGY130L inspection in Australia. Ex. 2102. On November 26, 2010, Tarawneh send the inventors a report that summarized all of the results for Railcar 130L, with tables summarizing the results of the three alarm levels and temperature history plots, and an observation that there was "some issue" with the rear of the car, and an inspection and teardown was recommended. Exs. 2103; 2013, ¶~~39~~35. Andrew Martin sent a November 29 meeting invitation for conference calls that "[o]ccur… every Wednesday" regarding "SCT Data Analysis with UTPA" from December 8, 2010 to May 18, 2011. Ex. 2104.

By December 2010, Amsted was continuing "to review the accuracy and completeness of [the bearing condition monitoring] algorithms and check for functions that are portable to a microprocessor." Exs. 2105; 2013, ¶~~40~~36. On December 6, Tarawneh noted that several of the bearings on railcar 130L showed high temperatures. Exs. 2106; 2013, ¶~~40~~36. He also emailed a presentation that updated the November 26 presentation, specifying that 130L Node 6 had a bad ranking, and that the standard deviation was misleading "since there are several bad bearings within the car." Exs. 2107; 2013, ¶~~40~~36. Development of alarm thresholds in response to testing results also continued during this time. Exs. 2108 ("we will continue to watch alarm level 3 data very closely in order to get more comfortable with setting up proper alarm thresholds."); 2013, ¶~~40~~36. William Lefebvre and Brent Wilson followed up that the alarm levels they were experiencing were not "a negative for monitoring temperature." Exs. 2109; 2013, ¶~~40~~36.

In January 2011, the IONX Update from December 15 emailed from UTPA to the inventors indicates extensive testing on the 130L Node, with "Future Work" including generating "10-Day Weekly Reports" and "converting existing scripts to run on last 10 active days of data for the fleet." Ex. 2110, 45. On January 6, 2011, UTPA emailed the "monthly checklists" to the inventors, which included Fleet-Wide Level 3 Report Criteria that reported that they would "re-plot the historical data to see if we can gauge the rate at which "watch list" bearings are degrading." Ex. 2111.

The January 7, 2011 Engineering Status Report verified that data from the tests was still being analyzed and "processed through new advanced algorithms" and "[p]rototype parts have been running in November at UTPA with no sign of trending data." Ex. 2112. A possible truck issue was detected, with "all bearings running statistically hotter than others" and therefore were "being watched closely." *Id.* Javier Kypuros sent the inventors another IONX Update on January 13, 2011 with fleet-wide report criteria including observations and analysis. Ex. 2113; 2013, ¶~~41~~37.

On February 14, 2011, Andrew Martin requested slides from Kypuros on "problematic cars that are reporting erroneous reading for long periods of time." Exs. 2114; 2013, ¶~~42~~38. On that same day, he reported to his co-inventors that "[t]he motes are still alive and reporting," and weekly SCT data analysis conference calls continued with UTPA. Ex. 2115; Ex. 2116; 2013, ¶~~42~~38. On February 16, 2011, Tarawneh sent the inventors two presentations that summarized the SCT 130L and 77H Railcar Performances, including the bearing temperature histories, alarm level summaries for every month from April 2010 through January 2011. Exs. 2117; 2013, ¶~~42~~38. Emails on February 17 and 18 show further requests from the inventors to UTPA for continued testing and analyses. Exs. 2118; 2119; 2120; 2121; 2013, ¶~~42~~38. On February 21, Tarawneh emailed the inventors a chart of the Level 2 Alarm violators, noting that UTPA hired someone to look "into the SCT data and prepare

presentations and tables of abnormalities." Exs. 2122; 2013, ¶~~42~~38. UTPA emailed the slides for the weekly conference call on February 23, which included an IONX Update reporting issues with some of the nodes and node calibration data. Exs. 2123; 2013, ¶~~42~~38. On February 25, UTPA reported that they "should be starting the low ambient calibration by March 23rd." Exs. 2124; 2013, ¶~~42~~38.

Weekly conference calls with the UTPA team continued through March 2011. Exs. 2125; 2013, ¶~~43~~39. On March 15, Andrew Martin sent an email to his co-inventors that they "should review the slide below on energy reductions in bearings at higher temperatures." Exs. 2126; 2013, ¶~~43~~39. On March 30, Andrew Martin emailed the UTPA team that maintenance data on the SCT fleet had been reviewed, and they needed to make sure they were not "comparing old bearings to new bearings." Exs. 2127; 2013, ¶~~43~~39. Brent Wilson replied with a request to inspect the 130L truck for anomalies. Exs. 2128; 2013, ¶~~43~~39. On that same day, William Lefebvre emailed Brent Wilson and Jay Monaco discussing the statistics on a few WSNs and requesting replacement nodes. Ex. 2129.

SCT railcars continued to be monitored into April 2011, with an update for SCT prepared by April 7. Ex. 2130. On April 8, 2011, Brent Wilson emailed slides to the team for a call that included "data I had UTPA generate comparing class K/F bearings under loaded and unloaded conditions." Ex. 2131. On April 14, Tarawneh emailed Andrew Martin a calibration plot of new nodes stating that "the calibration

curve is good even at low temperatures." Exs. 2132; 2013, ¶~~44~~40. He noted that they continued to run temperature data and that "so far, we are very excited about the data." *Id.* On April 21, 2011, Andrew Martin emailed the Amsted team an update that "[t]he IONX Bearing Condition Monitoring System has been running successfully for twelve months," and identified a car (130L) that continued to be monitored. Ex. 2133. He gave recommendations and requested a third-party teardown of the flagged 130L assembly. *Id.* The weekly UTPA conference calls to review data analysis continued as well, with updated "IONX Update" slides. Exs. 2134; 2135; 2013, ¶~~44~~40.

By May 2011, bearing temperatures were continuing to be monitored. Calls with updates from UTPA continued, with the May 4 IONX Update reporting the node temperature calibration graphs, and noting that "there were no Level 2 Violations for the month of April" so Level 3 stats were compiled for analysis. Ex. 2137, 22. On May 9, Tarawneh emailed UTPA testing would continue through the summer, including "lifetime testing of the scanned components" and "collecting calibration data for IONX." Ex. 2138. On May 16, Tarawneh emailed the inventors presentations with updated analyses of the performance of 10 of the SCT Railcars, with observations of trends and recommendations. Exs. 2139; 2013, ¶~~45~~41. On May 18, there was another conference call with UTPA and the inventors to discuss the IONX Updated slides. Exs. 2140; 2013, ¶~~45~~41.

Conference calls with UTPA to discuss the SCT Data Analysis and other testing continued through June 2011, with an IONX Update Presentation reporting on node temperature calibration and a discussion of Criteria 3 and 4 analyses to identify bearings for service that consistently operated above average temperatures. Exs. 2141; 2142; 2013, ¶~~46~~42. On June 15, Tarawneh emailed the inventors presentations with updated analyses of the performance of 10 of the SCT Railcars, with observations of trends and recommendations. Exs. 2143; 2144; 2145; 2013, ¶~~46~~42. On June 22, Kypuros provided an IONX update for a conference call scheduled that day. Ex. 2146, 2013, ¶~~46~~42.

Conference calls with UTPA to discuss the SCT Data Analysis continued in July 2011, with an IONX Update Presentation reporting on node temperature testing and battery life. Exs. 2147; 2013, ¶~~47~~43. A July 8 email from Andrew Martin to Doug Cummings reports that "[t]he 10 cars on test are still giving us valuable data and the bearing teardowns will help that." Exs. 2148; 2013, ¶~~47~~43. This email also discussed the replacement of bearing temperature motes on SCT's wagons and a request to inspect bearings "that are close to tripping our algorithms." *Id.* On July 13 and 19, UTPA emailed the inventors more updates with node temperature testing data. Exs. 2150; 2151; 2013, ¶~~47~~43. A July 20, 2011 email chain among inventors and non-inventors concludes that the majority of the algorithms can be pushed onto WSNs and two algorithms will need to send data points to the CMU every 6 hours.

Exs. 2152; 2013, ¶~~47~~43. Tarawneh sent a presentation to the inventors on July 27, 2011 that summarized the node temperature testing data. Exs. 2153; 2013, ¶~~47~~43.

By August 2, 2011, the invention claimed in the '673 Patent was reduced to practice. On this date, Andrew Martin sent an email to the team with a report for SCT that "highlights the successes of the trial and a direction forward." Exs. 2154, 1; 2013, ¶~~48~~44. This report demonstrates that the invention worked for its intended purpose, with utility beyond a probability of failure: "The system found two (otherwise undetected) faulty bearings;…. Identified a poorly performing bogie, which has since been serviced eliminating the high bearing temperatures observed; [and] the installation… has withstood a harsh and demanding railroad environment." Exs. 2154, 6; 2013, ¶~~48~~44. Additionally, the multi-tiered alarm approach was validated, and algorithms were developed "that indicate bearing 'condition'": "[E]xtensive use of predictive algorithms developed during the trial phase have eliminated the high temperature and high risk bearings from the fleet." *Id.*, 7. In conclusion, the inventors have "developed and proven a bearing condition monitoring system with action instructions for any critical alerts." *Id.*, 15. The following pictures from this report demonstrate all components of the '673 invention remained the same throughout the testing period:

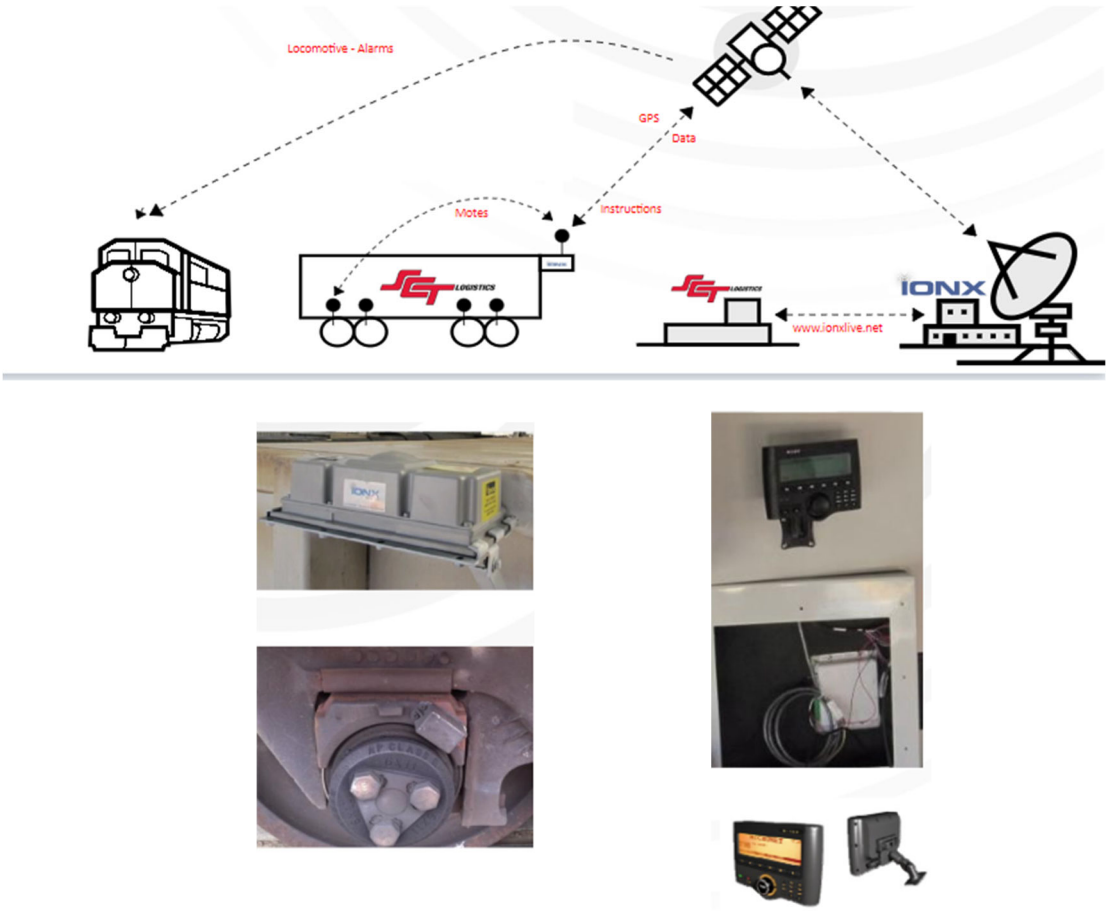

Ex. 2013, ¶48.

ii. <u>Reasonable Diligence</u>

Where an inventor conceived of the invention before the filing date of the alleged prior art but reduced it to practice after, the inventor must connect the conception with the reduction to practice by showing that he exercised reasonably continuous diligence. *Mahurkar v. C.R. Bard, Inc.*, 79 F.3d 1572, 1577 (Fed. Cir. 1996). The "point of the diligence analysis... is to assure that, in light of the evidence as a whole, 'the invention was not abandoned or unreasonably delayed." *Perfect Surgical Techniques, Inc. v. Olympus Am., Inc.*, 841 F.3d 1004, 1009 (Fed. Cir.

2016). Diligence need only be reasonably continuous, not be perfectly continuous; "[p]eriods of inactivity within the critical period do not automatically vanquish a patent owner's claim of reasonable diligence." *Arctic Cat Inc. v. GEP Power Prod., Inc.*, 919 F.3d 1320, 1331 (Fed. Cir. 2019). The purpose of the diligence inquiry "is not to scour the patent owner's corroborating evidence in search of intervals of time where the patent owner has failed to substantiate some sort of activity." *Id.* The invention described in the '673 Patent clearly required a long period of testing, collecting and analyzing the results from that testing, and then implementing improvements into new tests. Ex. 2010, ¶71. Since reasonably continuous diligence in this case depended on the nature and timing of this testing, the testing environment, and the collection and analysis of millions of results (including awaiting results from numerous railcar trips and numerous railcars in Australia), it is clear from the evidence that reasonably diligent work on the invention continued until at least as early as August of 2011. *Id.*, ¶72.

2. <u>Claim 1</u>

Notwithstanding it is not prior art, Armitage fails to disclose, teach, or suggest limitation 1(b): "applying a heuristic to said received data to determine deviations from nominal operating conditions." In Armitage, sensor nodes 121-124 are coupled to a railway car 110. Armitage, Fig. 1; ¶26. "Control node 130 processes … the sensor information to determine a fault condition for the undercarriage portion. *Id.*

This determination merely involves thresholding based on trend analysis. Armitage, ¶¶29-30. The threshold value used in the thresholding process is dynamically determined based on a pool of sensor data. Ex. 2010, ¶64. The dynamically determined threshold value can include a running average of the temperature measurements for a population of sensors (e.g., all wheels on the railway car), a failure threshold dynamically determined based on a time series of sensor data from all sensors of the population of sensors, an upper limit for a dynamically normalized range of operation for the population of sensors, or a lower limit for a dynamically normalized range of operation for the population of sensors. Armitage, ¶¶29, 42, 43. Ex. 2010, ¶75-76.

The dynamic normalization of Armitage necessarily results in a change of the range of operational values for the undercarriage element in real time based on sensor data. Ex. 2010, ¶77; Armitage ¶43. During prosecution, Armitage argued that the claim limitation "monitoring for patterns of deviation in the information from a population of sensors" is a distinct type of analysis from merely using a predetermined static threshold that is set in advance as in the art applied by the Examiner against Armitage's claims (referred to as "Sakatani"). Ex. 2005, 82-83; Ex. 2010, ¶77. Armitage explains in response that "Sakatani merely discusses ***individual*** sensors detecting fault conditions based on ***predetermined thresholds***." Ex. 2005, 82 (emphasis in original). These arguments contrasting Sakatani against

the Armitage claims resulted in allowance. *Id.*, 88-90. These statements are highly probative how the Armitage system functions.

In Armitage, the threshold of interest has been dynamically determined, e.g., by establishing a low and high threshold that is three standard deviations away from the running average of the pool of sensor data. Ex. 2010, ¶78; Armitage, ¶41. Armitage explains the following operations are performed: (1) detecting when a data reading by a sensor deviates from the dynamically determined threshold value by at least a certain amount; and (2) determining that a fault condition does exist or could exist at the time such a detection is made. Armitage, Fig. 4; ¶¶30, and 41-43.

However, Limitation 1(b) of claim 1 requires the determination of how much an operational characteristic differs from expected operating conditions. Ex. 2010, ¶79; §III.B, *supra.* (incorporated here). The Armitage analysis is wholly untethered from any analysis taking into consideration acceptable operating conditions of the railcar. In Armitage, it is simply assumed that when a sensor's data is far enough away from the running average of sensor data that the corresponding component may experience a failure. Ex. 2010, ¶79 And at any given time, that the sensor in Armitage defines as "normal" might be out of whack, which would make the sensor in Armitage not detect that anything was wrong. Ex. 2010, ¶75. This deficiency in Armitage was demonstrated during the development of the '673 invention. Ex. 2107 ("The standard deviation above car [sic] is misleading since there are several bad

bearings within the car.") A POSA would not look to Armitage's dynamic normalization disclosures to arrive at the claimed invention. Ex. 2010, ¶75-81.

A POSA would recognize that Armitage's system is not the same as that recited in limitation 1(b). *Id.*, ¶80. For example, a POSA would understand that Armitage's dynamically determined threshold and normalization process do not represent expected operating conditions for the undercarriage elements. *Id.* Moreover, Armitage's methods have serious flaws in the context of trains having individual railcars of varying age and wear and tear. First, consider the scenario of an aging railcar in which all of the bearings are relatively old and worn. Determining a dynamic threshold of a population of sensor data where each sensor is feeding in data from equally as old and worn bearings would be incapable of determining whether one of the sensors began to "deviate from nominal conditions" because all of the bearings are old and worn. *Id.* Second, consider the scenario of a train having plural railcars where each railcar has bearings with different wear and tear. Finding outlier sensor data from a train in which each individual car has a unique level of wear and tear would overlook potential problems and report problems that were not necessarily outside of expected operating conditions. *Id.* Therefore, a POSA would recognize that Armitage's degree of deviation is not necessarily the same as or equivalent to the requirements of limitation 1(b), and, in fact, would view the claimed solution as a far superior solution than that of Armitage. *Id.*

Petitioner has not established that independent claim 1 is unpatentable over Armitage. Therefore, Petitioner failed to show that claims 2, 4, 6-9, and 13, which depend from independent claim 1, are unpatentable either. Ex. 2010, ¶81.

3. Claim 10

Armitage and the skill of a POSA fail to disclose, teach, or suggest limitations 10(a) and 10(b): "(a) sensing the temperature of a part of the railcar other than the desired part by use of a temperature sensor in thermal communication with said other part; and (b) determining the temperature of the desired part by use of the temperature sensed in step (a)." Petitioner liberally interprets Armitage's silence regarding the specific way sensor nodes are coupled to the railcar in view of an assumed level of skill of a POSA to reach the claim limitations. Petition, 65-67; Ex. 2010, ¶82-83. The Petition does not explain "what a skilled artisan would have gleaned from the teachings of the prior art, and is instead an impermissible exercise of hindsight with the claims of the ['673] patent serving as a guide." *Apple Inc. v. Voip-pal.com, LLC.*, No. IPR2016-01201, Paper 54, 23 (PTAB Nov. 20, 2017). Petitioner does not explain at all how Armitage's sensor node, being mounted on a bracket, would even be in "thermal communication" with another part and how the system would cross correlate the determination of this other unnamed part to the bearing temperature. For example, the embodiment cited to in the petition (Sensor nodes 320-327 and Fig. 3) does not discuss temperature sensing at all. Ex. 2010, ¶84.

Petitioner does not explain how a POSA would know, based on the disclosure of Armitage, what the sensor is in thermal communication with or how Armitage measures the temperature and determines the temperature of some other part. *Id.*, ¶84-85. Petitioner leaves each of these questions unresolved (yet hypothetically solved by a POSA), leaving the claim language itself as the only source of motivation.[2] Petition, 65-67. This is hindsight reasoning. *See, e.g., Otsuka Pharm. Co. v. Sandoz, Inc.*, 678 F.3d 1280, 1296 (Fed. Cir. 2012) ("The inventor's own path itself never leads to a conclusion of obviousness; that is hindsight. What matters is the path that the person of ordinary skill in the art would have followed, as evidenced by the pertinent prior art.")

Armitage's sensor nodes 121-124, 320-327 (i) are coupled to undercarriage elements 111-114, 312-315 that are being monitored, and (ii) are configured to measure the temperature of the undercarriage element. Ex. 2010, ¶86. Nowhere in

---

[2] Although Mr. Ricca cites to U.S. 2005/0194497 to Matzan, which is not a reference relied upon in Ground 3, there is no specific citation to this reference in the Petition nor is there any analysis for why this reference has any relevance and should be ignored by the Board. This is particularly true as Matzan does not imply taking the temperature of a different part. Ex. 2010 at ¶90.

Armitage is it taught explicitly or implicitly that (1) the temperature of a first part is determined based on the temperature of another part and/or (2) the temperature of a rotating portion of the first part of the undercarriage element is determined based on the temperature of a non-rotating portion of the first part. *Id.* Armitage simply teaches that a contact temperature sensor or a non-contact temperature sensor can be used to monitor a temperature of an undercarriage element. *Id.* Since the temperature of the desired part is directly measured, there is no need in Armitage for transforming or otherwise using the temperature of another part to obtain the temperature of the undercarriage element. *Id.* Armitage does not contemplate such a configuration and hence Petitioner must resort to the assumed skill level of a POSA. *Id.* This type of computational analysis would unnecessarily burden Armitage's system.

Furthermore, with regard to limitation 10(c), Armitage does not teach or suggest "determining if said temperature of the desired part is outside an acceptable range of temperatures." Similar to the deficiency identified with regard to limitation 1(b) above, Armitage calculates deviations from a dynamically normalized moving average of readings and does not compare a temperature reading of one component to "an acceptable range of temperatures." §IV.C.2, *supra.* (incorporated here); Ex. 2010, ¶87-89, 91. Instead, Armitage calculates deviations from a dynamically normalized moving average of readings and does not compare a temperature reading of one component to "an acceptable range of temperatures" as recited in claim 10.

Ex. 2010, ¶91. A POSA would not look to Armitage and its disclosure of dynamic thresholds to understand how to determine whether a temperature reading is inside or outside of "an acceptable range of temperatures." *Id.*

Petitioner has not established that independent claim 1 is unpatentable over Armitage. Therefore, Petitioner failed to show that claims 2, 4, 6-9, and 13, which depend from independent claim 1, are unpatentable either. Ex. 2010, ¶92.

D. Ground Four: Petitioner has failed to show a reasonable likelihood that Claims 3, 5, 12–18, and 20–22 are unpatentable under 35 U.S.C. § 103(a) over Armitage in view of Lefebvre

1. Claims 3, 5, and 13

As shown above, Petitioner has not shown that independent claim 1 is unpatentable in view of Armitage. §IV.C.2, *supra* (incorporated here). This ground of the petition does not rely on Lefebvre for any limitation of independent claim 1. Therefore, Petitioner failed to show that claims 3, 5, and 13, which depend on independent claim 1, are unpatentable for at least the same reasons. Ex. 2010, ¶¶93-94.

2. Claim 12

As shown above, Petitioner has not shown that independent claim 10 is unpatentable in view of Armitage. §IV.C.3, *supra* (incorporated here). This ground of the petition does not rely on Lefebvre for any limitation of independent claim 10.

Therefore, Petitioner failed to show that claim 12, which depends on independent claim 10, is unpatentable for at least the same reasons. Ex. 2010, ¶¶95-96.

3. Claim 14

With regard to limitation 14(a), "one or more sensing units which periodically collect readings from one or more sensors," Petitioner first appears to argue Armitage could be modified to use digital sensors and that such a combination would inherently meet this limitation. Petition, 73. Petitioner then relies on Lefebvre in the alternative, apparently recognizing the weakness in its position with regard to Armitage alone. *Id.* Both of these arguments fail. Ex. 2010, ¶¶97-105. Petitioner also fails to identify with particularity the basis for its position that the Armitage/Lefebvre combination teaches or suggests limitation 14(b): "heuristically analyzing said received [sensor] data to determine if an actual failure exists on said railcar or to predict potential or imminent failures based on a statistical analysis of said received [sensor] data." *Id.*, ¶¶106-07.

a. There is no motivation to modify Armitage to include digital sensors

Petitioner admits that "Armitage does not expressly disclose that its sensor nodes periodically collect sensor readings from the sensor units." Petition, 73. It attempts to fill this gap by proposing to modify Armitage to include digital sensors and alleging that as-modified Armitage would "inherently transmit data on a

periodic basis." *Id.* Again, Petitioner's Expert Report does not adequately support the Petition and is a conclusory verbatim copy of Petitioner's argument, plus the statement "in my opinion." *Compare* Ex. 1003 ¶273 *with* Petition, 73. In fact, digital sensors typically transmit only when interrogated, not periodically. Ex. 2010, ¶99. As such, these arguments are equally conclusory and unsupported, improperly applying hindsight.

Armitage discloses analog sensors and analog-to-digital converters and accordingly it is unclear why a POSA would incorporate digital sensors into Armitage other than by means of improper hindsight. Armitage, 4:67-5:22. Moreover, Petitioner does not explain what other modifications to Armitage would be necessary to include digital temperature sensors. Petition, 73; Ex. 1003, ¶273; Ex. 2010, ¶100.

b. <u>There is no motivation to modify Armitage in view of Lefebvre</u>

Petitioner does not establish any motivation to modify Armitage in view of Lefebvre to arrive at claim 14 because doing so would alter the basic operating principles of Armitage as explained in more detail below. Petitioner relies exclusively on Lefebvre's power-management features to meet limitation 14(a). Petition, 33 (citing Lefebvre, ¶¶34-35). The only motivation alleged by Petitioner to make the modification is because "it predictably saves power." Petition, 74.

However, the specification of the '673 patent expressly distinguishes between the power-saving functionality and the periodic collection of data for analysis. *Compare* Ex. 1001, 5:36-42 *with* 14:11-14. And Lefebvre talks about going to sleep "until it has to perform its next tasks," not periodically. Ex. 2010, ¶101. A POSA would therefore appreciate that these are two different concepts. Petition, 73-74.

Petitioner relies on a data analysis technique in Armitage that requires "continuous monitoring" and does not point to any indication in Armitage that power saving is a concern. Armitage, ¶44 ("Realtime, continuous monitoring of all critical railway car components can be monitored…."); Ex. 2010, ¶102. The sensors disclosed in Armitage operate in the conventional manner by continuously sensing while the railcar is moving. *Id.* Particularly, Armitage analyzes sensor data through a comparison of the data from one sensor to a running average of data from a population of sensors to identify outliers. *Id.* (citing Armitage, ¶¶30, 42).

Lefebvre discloses a sensor which "is programmed to switch on briefly" but would normally be "in a low powered state most of the time." Lefebvre, ¶¶34-35. Modifying Armitage with Lefebvre would frustrate the ability of Armitage's sensor to "continuous[ly] monitor[] all critical railway components." Armitage, ¶44; Ex. 2010, ¶103. A POSA would understand that placing a sensor in a low power standby state is different from "periodically collect[ing] readings from one or more sensors" as recited by limitation 14(a). *Id.* Petitioner has not shown that Lefebvre discloses

limitation 14(a) because a POSA would readily perceive the difference between the periodic collection of readings from one or more sensors with a power management method. *Id.*

For at least these reasons, a POSA would not try to combine Armitage's dynamic continuous monitoring with Lefebvre's power management features to perform periodic collections of sensor data with any probability of success. Ex. 2010, ¶104. This is at least because the power management features disclosed in Lefebvre would prevent Armitage's system from establishing an accurate running average of the sensor data. *Id.*; Armitage, ¶¶41-44. Thus, Lefebvre's alleged "power-saving scheme" would not motivate a POSA to modify Armitage in the manner described in the Petition. Ex. 2010, ¶104.

Petitioner has failed to show that independent claim 14 is unpatentable over Armitage and Lefebvre at least because there is no motivation to modify Armitage in view of Lefebvre. *Id.*, ¶¶104-05. Claims 15-20 depend from independent claim 14 and consequently Petitioner failed to show that they are unpatentable either. *Id.,* ¶105.

c. <u>Petitioner does not adequately address how the prior art teaches limitation 14(b)</u>

Petitioner does not adequately address how the disclosure of Armitage heuristically determines that an "actual failure" exists or predicts "potential or

imminent failures," as recited in limitation 14(b). Ex. 2010, ¶¶106-07. Rather, Petitioner attacks independent claim 14 by relying wholesale on the same arguments presented for limitations 1(b)-(d), 8(e), and 9(a) (none of which require an actual failure or predictions based on statistical analysis). Petition, 74. The difference in claim language amongst these claim limitations is shown below. Relying wholesale on analysis from entirely different limitations having substantively different claim scope cannot satisfy Petitioner's burden of proof, not least because Petitioner has not outlined a sufficiently clear prima facie case against limitation 14(b). Thus, PO is not adequately on notice as to its invalidity position. For example, none of limitations 1(b)-1(d), 8(e), or 9(b) even include key claim terms "actual failure", "potential or imminent failures", "predict", or "statistical analysis" and there is no analysis at all for why these dissimilar limitations would have any bearing on why or how Armitage discloses limitation 14(b). It is unclear why anything about a "display unit" of limitation 8(e) is remotely relevant. PO cannot realistically respond to Petitioner's incomplete and incoherent arguments.

Limitation 14(b)	heuristically analyzing said received data to determine if an actual failure exists on said railcar or to predict potential or imminent failures based on a statistical analysis of said received data
Limitation 1(b)	applying a heuristic to said received data to determine deviations from nominal operating conditions
Limitation 1(c)	assigning a severity level to said deviations from nominal operating conditions

Limitation 1(d)	determining an alarm condition based on said assigned severity level
Limitation 8(e)	transmitting said raised alarm to a display unit on a train of which said plurality of railcars are a part
Limitation 9(b)	determining a recommended course of action based on said alarm condition

The petition—without any analysis—simply equates "statistical methods" with detecting deviations from nominal operating conditions and refers to limitation 1(b). *Id.* Petitioner does not explain why the analysis applicable to limitation 1(b) would be equally applicable to limitation 14(b). *Id.* Petitioner's expert is similarly conclusory and provides no support for this linkage with limitation 1(b). IV.C.2, *supra* (incorporated here); Ex. 1003, ¶266.

Taking Petitioner's references at face value, its reliance on the analysis for limitation 1(b) is misplaced. As noted above, in the discussion of limitation 1(b) there is no analysis regarding why a POSA would consider this disclosure to even be relevant to the limitation 14(b). There is no analysis of the specific claim terms in limitation 14(b) nor is there any explanation for why a POSA would find them similar to those in limitation 1(b). Ex. 2010, ¶107. The same is true with respect to limitation 1(c). §§IV.A.3.b, *supra*, IV.D.3, *infra* (both incorporated here). It is not Patent Owner's nor the Board's job to reconstruct Petitioner's invalidity position from a maze of cross references.

4. Claim 21

Petitioner fails to establish a motivation to combine Armitage and Lefebvre beyond improper hindsight. Petitioner relies wholesale on its prior analysis of claim 14. That analysis is just as insufficient for claim 21. §IV.D.3.c, *supra* (incorporated here). Claim 21 requires both a determination of an actual failure and a prediction of potential or imminent failures. Similar to limitation 1(b) as explained above, a POSA would not be motivated to modify Armitage in view of Lefebvre because doing so would change the basic operating principles of the Armitage invention. §IV.C.2, IV.D.3.c, *supra* (both incorporated here); Ex. 2010, ¶¶108-09. For example, incorporating the power saving scheme of Lefebvre in Armitage would change the basic operating principles of Armitage. *Id.* Petitioner has not established that independent claim 21 is unpatentable over the Armitage and Lefebvre combination. Therefore, Petitioner failed to show that Claim 22, which depends from independent claim 21, is unpatentable over the combination either. *Id.*, ¶110.

V. SECONDARY CONSIDERATIONS

Objective indicia of non-obviousness "can be the most probative evidence of non-obviousness in the record, and enables the court to avert the trap of hindsight." *Crocs, Inc. v. ITC*, 598 F.3d 1294, 1310 (Fed. Cir. 2010). To be afforded substantial weight, the objective indicia of non-obviousness must be tied to the novel elements

of the claim at issue, but "need only be reasonably commensurate with the scope of the claims." *Rambus Inc. v. Rea*, 731 F.3d 1248, 1257 (Fed. Cir. 2013).

Industry praise provides "probative and cogent evidence that one of ordinary skill in the art would not have reasonably expected [the invention would be successful]." *Institut Pasteur v. Focarino*, 738 F.3d 1337, 1347 (Fed. Cir. 2013). The '673 invention, even before it was reduced to practice, was recognized as an "amazing accomplishment" and "one of the biggest" breakthrough developments in the rail industry over the past 30 years. Ex. 2030.

"Copying may indeed be another form of flattering praise for inventive features, and thus evidence of copying tends to show nonobviousness." *WBIP, LLC v. Kohler Co.*, 829 F.3d 1317, 1336 (Fed. Cir. 2016). Petitioner's CTO, Brent Wilson, is a named inventor of the '673 patent and Petitioner, through Mr. Wilson, had access to Amsted's technology. IV.C.1, *supra* (incorporated here). Hum advertises a "proprietary algorithm built on 15 years of research," which Amsted paid for (*id.*) and touts the very features Amsted patented in the Challenged Claims. Exs. 2155, 2156. Nexus is conclusively established through Hum's admission that it infringes claims 1, 2, 6, and 7 of the '673 patent. Ex. 2157, 15-17.

VI. CONCLUSION

For the reasons described above, the Board confirm the challenged claims are not invalid.

Respectfully submitted,

By: /Jeff E. Schwartz/
Jeff E. Schwartz
Reg. No. 39,019
Counsel for Patent Owner
Amsted Rail Company, Inc.

Dated: May 15, 2023