UNITED STATES PATENT AND TRADEMARK OFFICE

BEFORE THE PATENT TRIAL AND APPEAL BOARD

HUM INDUSTRIAL TECHNOLOGY, INC.
Petitioner

v.

AMSTED RAIL COMPANY, INC.
Patent Owner

Case IPR2023-00539
US Patent No. 9,981,673

Before JAMES P. CALVE, KEVIN W. CHERRY, and MICHAEL L. WOODS,
Administrative Patent Judges.

PETITIONER'S DEMONSTRATIVES FOR ORAL ARGUMENT

Pursuant to the April 18, 2024 Order Setting Oral Argument (Paper 41) and 37 C.F.R. § 42.70, Petitioner Hum Industrial Technology, Inc. hereby files its Demonstratives for use at Oral Argument, attached hereto.

Respectfully submitted,

Dated: June 7, 2024

By: /*Eric J. Rakestraw*/

Eric J. Rakestraw, Reg. No. 68,740
Daisy Manning, Reg. No. 66,369
HUSCH BLACKWELL LLP
8001 Forsyth Boulevard, Suite 1500
St. Louis, MO 63105
(314) 480-1500 Telephone
(314) 480-1505 Facsimile
PTAB-ERakestraw@huschblackwell.com
PTAB-DManning@huschblackwell.com

Attorneys for Petitioner
Hum Industrial Technology, Inc.

CERTIFICATE OF SERVICE

I hereby certify that on this 7th day of June, 2024, the foregoing was served via electronic mail to the attorneys of record for the ’673 Patent at the following address:

Jeff E. Schwartz Reg. No. 39,019 Fox Rothschild LLP 2020 K Street N.W., Suite 500 Washington, DC 20006 Tel: 202.696.1470 Fax: 202.461.3102 Email: jeschwartz@foxrothschild.com	Gary A. Hecht Reg. No. 36,826 Fox Rothschild LLP 2000 Market Street, 20th Floor Philadelphia, PA 19103-3222 Tel: 215.299.2416 Fax: 215.299.2150 Email: ghecht@foxrothschild.com
P. Marshall Ticer Reg. No. 74,653 Fox Rothschild LLP 2020 K Street N.W., Suite 500 Washington, DC 20006 Tel: 202.794.1237 Fax: 202.461.3102 Email: mticer@foxrothschild.com	Ryan North Miller Reg. No. 68,262 Fox Rothschild LLP 2000 Market Street, 20th Floor Philadelphia, PA 19103-3222 Tel: 215.299.2901 Fax: 215.299.2150 Email: rmiller@foxrothschild.com

By: */Eric J. Rakestraw/*
Eric J. Rakestraw, Reg. No. 68,740
Lead Counsel for Petitioner

HUSCH BLACKWELL

Hum Industrial Technology, LLC,
Petitioner,
v.
Amsted Rail Company, Inc.,
Patent Owner

Case No. IPR2023-00538 (U.S. Patent No. 9,365,223)
Case No. IPR2023-00539 (U.S. Patent No. 9,981,673)

Agenda

- Overview of the Challenged Patents and Grounds
- Claim Construction
- Grounds Based on *LeFebvre*
- Grounds Based on *Armitage*
- Patent Owner's Revised Motion to Amend

Overview of the Challenged Patents and Grounds

’223 Patent: Grounds of Invalidity

- The Petition asserted the following grounds under § 103:

No.	References	Claims
1	*LeFebvre*	2–10, 18, 20, 21, 23, and 25–32
2	*LeFebvre* in view of *Barone*	13–17, 22, and 24
3	*LeFebvre* in view of *Denny* and *Provasnik*	1 and 24
4	*Armitage*	2, 3, and 26–28
5	*Armitage* in view of *LeFebvre*	4–10, 13–18, 20–23, 25, and 29–32
6	*Armitage* in view of *LeFebvre*, *Denny* and *Provasnik*	1 and 24

’223 Paper 10 at 6.

’673 Patent: Grounds of Invalidity

- The Petition asserted the following grounds under § 103:

No.	References	Claims
1	*LeFebvre*	1–7, 10–18, and 20–22
2	*LeFebvre* in view of *Barone*	8 and 9
3	*Armitage*	1, 2, 4, 6–11, and 13
4	*Armitage* in view of *LeFebvre*	3, 5, 12–18, and 20–22

’673 Paper 1 at 6.

Prior Art: *LeFebvre*
U.S. Patent Publication No. 2007/0152107 A1

- *LeFebvre's* system utilizes a plurality of sensors to monitor the wheels and wheel bearings on each railcar, wherein the sensors communicate wirelessly with a control unit located on the railcar. EX1005, (57) Abstract.
- Data collected by the control unit is analyzed using heuristics to determine, for example, if a wheel bearing failure is approaching or imminent. EX1005, ¶¶ [0058]–[0059]; EX1003, ¶ 51.

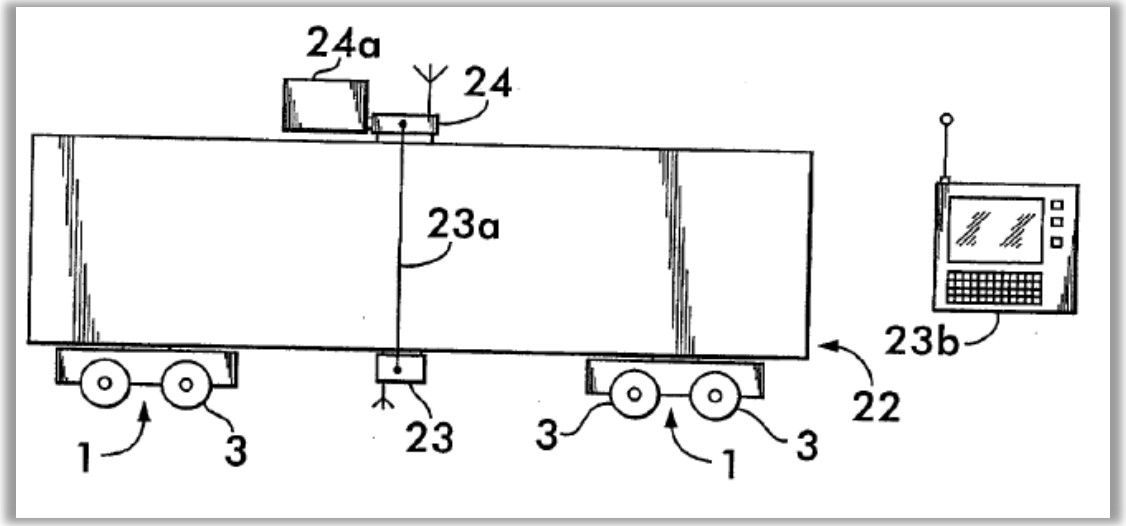

Prior Art: *Armitage*
U.S. Patent Publication No. 2011/0282540 A1

- *Armitage* discloses a "mobile railway car monitoring system [including] a plurality of sensor nodes coupled to an undercarriage portion of a railway car." EX1006, ¶ [0004].
- Each sensor node "includes a sensor portion" that "could include thermometers" or "other sensing equipment and circuitry." *Id.*
  - '223 Paper 10 at 10-11.

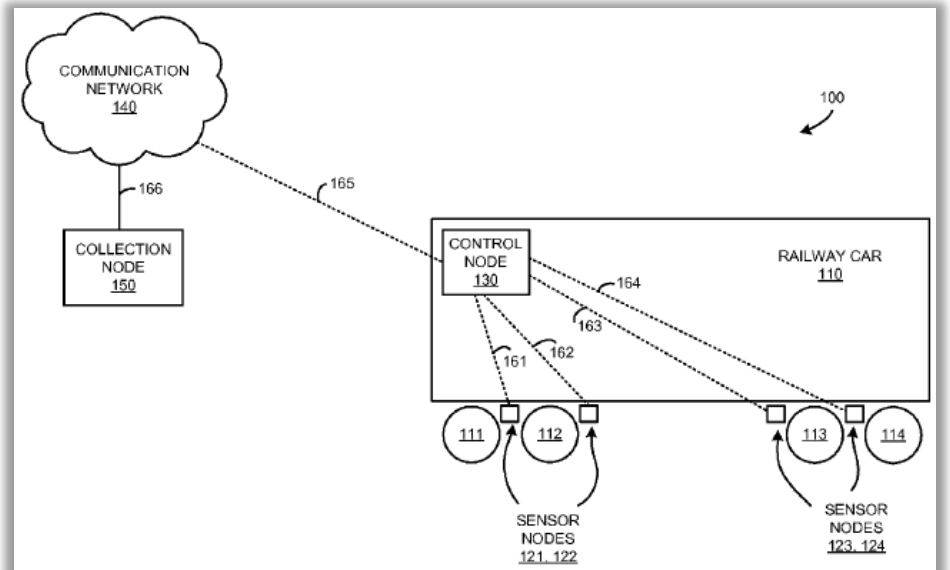

FIGURE 1

Prior Art: *Barone*
U.S. Patent Publication No. 2007/0208841 A1

- *Barone* is directed to a system for wirelessly monitoring the condition of railcar wheels and wheel bearings. See EX1007, (57) Abstract.
- The collected data is analyzed using heuristics to determine, for example, if a wheel bearing failure is approaching or imminent. EX1007, ¶¶ [0201]–[0220]; EX1003, ¶ 56.

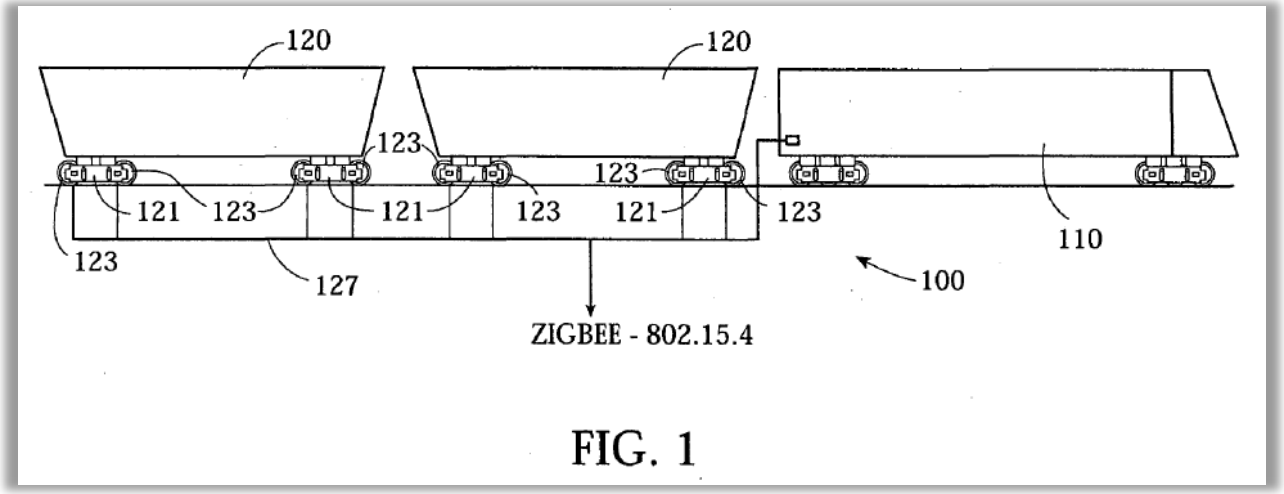

FIG. 1

Prior Art: *Denny* and *Provasnik*
U.S. Patent No. 5,633,628 to *Denny et al.*
U.S. Patent No. 4,282,754 to *Provasnik*

- *Denny* discloses a temperature sensor for monitoring the temperature of a wheel assembly on a railway car. *See* EX1008; (57) Abstract.
- *Provasnik* discloses a temperature sensor that is magnetically attached to an engine block to measure its temperature. EX1009, 2:46–65.
- These references are cited with respect to claim 1 of the ’223 patent, which requires an external temperature sensor having a magnetic attachment. ’223 Paper 10 at 53–55.

Claim Construction

Claim Construction Overview

- Petitioner asserts that no claim construction is necessary in either proceeding.
    - ’223 Patent: Paper 10 at 15.
    - ’673 Patent: Paper 1 at 15.
- Patent Owner proposed constructions for “housing” (’223 Patent), “a heuristic,” “nominal operating conditions,” and “severity level” (’673 Patent).
    - ’223 Patent: Paper 20 at 4.
    - ’673 Patent: Paper 21 at 4–7.

Claim Construction: “housing” (’223 Patent)

- Patent Owner argues that “housing” means “an enclosure.”
  - ’223 Paper 20 at 4.
- Petitioner asserts that no construction is necessary.
  - The plain and ordinary meaning of “housing” is “one or more parts that covers, encloses, supports, or protects other components.”
    - ’223 Paper 26 at 1–2; EX1033, ¶ 5.
- In the Institution Decision, the Board found that no construction was necessary.
  - ’223 Paper 15 at 16.

Patent Owner's Construction of "housing" is Improperly Narrow

In its briefing, Patent Owner applies a construction of "housing" that is even narrower than "an enclosure."

- Contrary to Patent Owner's argument, nothing in the specification or claim language limits the material used to construct the housing.
- Contrary to Patent Owner's argument, nothing in the specification or claim language requires that components can be removed from the housing.
- Contrary to Patent Owner's argument, nothing in the specification or claim language requires that the housing is hollow.
  - For example, the housing can be filled with potting material.
- Contrary to Patent Owner's argument, nothing in the specification or claim language requires the housing to be mounted in any particular location on the railcar.
    - *Compare* '223 Paper 20 at 8–10 *with* Paper 26 at 3–5.

Claim Construction: “heuristic” (’673 Patent)

- In the Institution Decision, the Board construed the claim term “heuristic” to mean “a rule, algorithm, function, formula, graphing function, or similar mechanism applied to data to assist in analyzing and/or interpreting the data.”
    - ’673 Paper 10 at 8.
- Patent Owner does not challenge the Board’s construction.
    - ’673 Paper 21 at 4.
- Petitioner does not challenge the Board’s construction
    - *See* ’673 Paper 23 at 1.

Claim Construction: “nominal operating conditions” (’673 Patent)

- In the Institution Decision, the Board properly found that “nominal operating conditions” means “normative or expected conditions based on trends, conditions of other components, ambient conditions, and predetermined values.”
    - ’673 Paper 10 at 8 (citing the ’673 Patent at 2:3–6, 13:30–15:36, 16:1–27).
- Patent Owner asserts “expected conditions based on at least one of trends, conditions of other components, ambient conditions, and predetermined values.”
    - ’673 Paper 21 at 4–5.
- Petitioner agrees with the Board’s construction, which encompasses ***both*** normative ***and*** expected conditions.
    - ’673 Paper 23 at 1.

Patent Owner's Construction of "nominal operating conditions" is Improperly Narrow

- Patent Owner's construction would exclude disclosed embodiments. For example:
  - The '673 Patent discloses a "Critical Alarm…set at a predetermined bearing temperature." EX1001, 14:1–3.
  - The "predetermined bearing temperature" is a ***normative*** limit, corresponding to the maximum permissible operating temperature of the bearing. '673 EX1030, ¶ 4.
  - The Board's construction encompasses this embodiment.
  - Patent Owner's construction excludes this embodiment.

Claim Construction: “severity level” (’673 Patent)

- In the Institution Decision, the Board properly found that “severity level” means “a type of fault that requires a particular action.”
    - ’673 Paper 10 at 8.
- Patent Owner asserts “one of a plurality of known values indicating seriousness.”
    - ’673 Paper 21 at 5–7.
- Petitioner agrees with the Board’s construction.
- Patent Owner’s construction is not consistent with the specification.
    - ’673 Paper 23 at 2–3.

Patent Owner's Construction of "severity level" is Improperly Narrow

- Nothing in the specification requires a "plurality of known values."
- In the specification, the purpose of a "severity level" is to determine whether a given deviation is ***severe enough*** to warrant an alarm. '673 Paper 23 at 2; '673 EX1030, ¶ 7.
  - The claimed system has "the ability to determine the severity of detected conditions to determine ***if*** immediate alarms should be raised." EX1001, 2:20–22.
  - "[D]etermining an alarm condition based on the assigned severity level avoids an excess of stoppages and delays that could result if an alarm was generated for every deviation that is detected." '673 EX1002, 425; see also '673 EX1001, 12:46–60.
  - Claim 1 requires assigning "***a*** severity level to said deviations," and "determining ***an*** alarm condition based on said assigned severity level."

Patent Owner's Construction of "severity level" is Improperly Narrow

- Patent Owner's construction would exclude disclosed embodiments.
  - The Level 2 Algorithms (14:10–58) raise an alarm if—and only if—"at least four of the following five criteria are flagged for the same bearing."
  - Either an alarm is raised (if four criteria are flagged) or it is not (if less than four criteria are flagged).
  - The Level 3 Algorithms (14:59–15:46) operate similarly and would also be excluded.
- The Board's construction embraces all disclosed embodiments.
  - '673 Paper 23 at 2; '673 EX1030, ¶¶ 8–9.

Grounds Based on *LeFebvre*

Grounds Based on *LeFebvre*

'223 PATENT

No.	References	Claims
1	*LeFebvre*	2–10, 18, 20, 21, 23, and 25–32
2	*LeFebvre* in view of *Barone*	13–17, 22, and 24
3	*LeFebvre* in view of *Denny* and *Provasnik*	1 and 24

'673 PATENT

No.	References	Claims
1	*LeFebvre*	1–7, 10–18, and 20–22
2	*LeFebvre* in view of *Barone*	8 and 9

The *LeFebvre* Grounds encompass all challenged claims in both patents.

’223 Patent, Ground 1, Claim 2

Claim	Language
2(pre)	A system for monitoring a railcar, comprising:
2(a)	a plurality of sensor devices located on the railcar for monitoring parameters or conditions of the railcar, each of said sensor devices being separate from one another and including a sensor for monitoring one of said parameters or conditions of the railcar;
2(b)	said plurality of sensor devices including at least one temperature sensor device having:
2(c)	**a housing;**
2(d)	a temperature sensor in thermal communication with an item of the railcar for which the temperature is being monitored, which item is external to said housing;
2(e)	electrical circuitry in communication with said temperature sensor for obtaining information regarding the temperature being sensed, **said electrical circuitry positioned within said housing**;

Claim	Language
2(f)	a power source electrically connected to said electrical circuitry for providing power thereto, **said power source positioned within said housing**;
2(g)	a communication device capable of broadcasting information regarding the temperature sensed via wireless communication, **said communication device positioned within said housing**; and
2(h)	a communication management unit, mounted on the railcar, capable of two way wireless communication with each of said plurality of sensor devices for receiving information therefrom, said communication management unit having a wireless communication device for broadcasting information about the parameter or condition being monitored.

’223 Patent, Ground 1, Claim 23

Claim	Language
23(pre)	A monitoring device for monitoring temperature on a railcar, comprising:
23(a)	**a housing mountable on a railcar**;
23(b)	a temperature sensor configured to be in thermal communication with a portion of the railcar to be monitored for temperature, which portion is external to said housing;
23(c)	electrical circuitry in communication with said temperature sensor for obtaining information regarding the temperature being sensed, **said electrical circuitry positioned within said housing**;

Claim	Language
23(d)	a power source electrically connected to said electrical circuitry for providing power thereto, **said power source positioned within said housing**; and
23(e)	a communication device capable broadcasting information regarding the temperature sensed, **said communication device positioned within said housing**;
23(f)	wherein the power consumption of said monitoring device is managed by placing said monitoring device in a standby state and periodically awakening said monitoring device to collect readings from said temperature sensor and to transmit the information regarding the temperature sensed via said communication circuitry.

LeFebvre discloses a housing.

[0021] FIG. **3** shows, in schematic form, an adapter pad **16** modified to carry out the objectives of the present invention. The pad contains a plurality of sensors **5** which are preferably embedded into its upper, side and lower surfaces or into other locations such as its end surfaces as may be necessary for the purposes of the invention as explained more fully below. In preferred form, the pad **16** has an extended attachment portion **17** located so as to be relatively isolated from the forces transmitted through the adapter **16**. The extended portion **17** contains a power source **18**, an analog/signal conditioning means and analog to digital conversion means and an associated microprocessor unit **19** and a communications unit **20** which is preferably a low power radio transmitter/receiver having an antenna **21**. The sensors

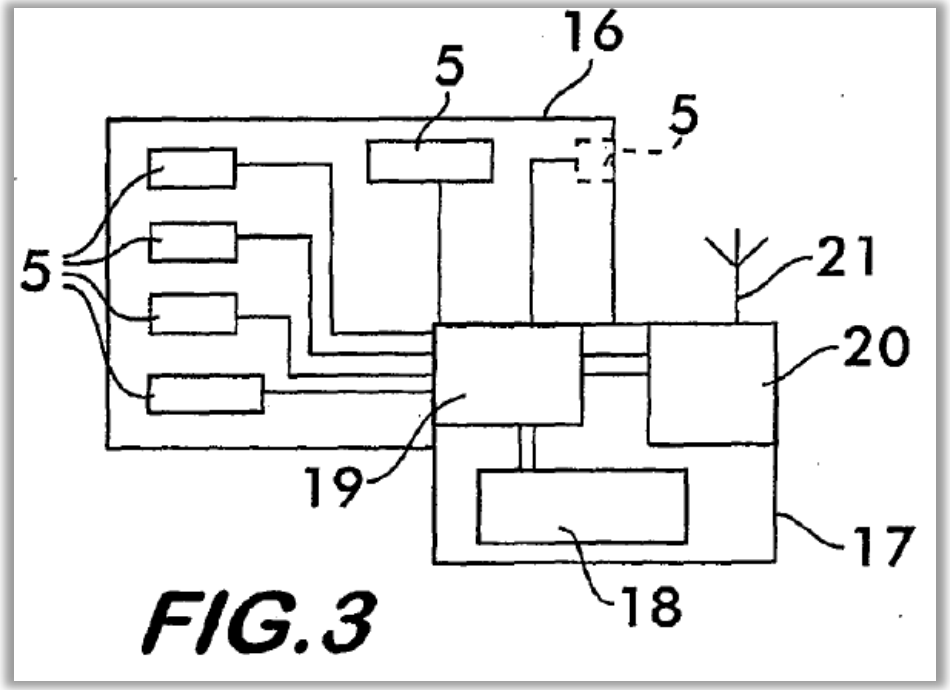

FIG. 3

LeFebvre's circuitry, power, and communications devices are located within the housing.

- LeFebvre discloses a housing even under Patent Owner's construction—the instrumented pad ***encloses*** the electronic components that are contained and embedded within it.
  - '223 Paper 26 at 2–3.
- Reference number 17 refers to the portion of the instrumented pad that extends outwardly—it is an "extended portion" of instrumented pad 16.
  - '223 Paper 26 at 4–5.
- Nothing in the claim language requires a housing that is free of internal partitions or divisions, or that is constructed from a single unitary body.
  - '223 Paper 26 at 4.

The specification does not exclude or distinguish *LeFebvre*'s instrumented pads.

> In another alternate embodiment of the invention, one or more motes may be housed in alternative housings or built in to the railcar itself. In one such embodiment, motes can be built into the form of an adapter pad similar to the type shown in U.S. Pat. Nos. 7,698,962 and 7,688,218, the disclosures of both of which are incorporated herein by reference, which could be adapted for use with the present invention.

EX1001, 15:18–24 ('223 Patent)

- *LeFebvre's* adapter pad is expressly referenced as an "embodiment of the invention" directed to "alternative housings."
- The specification states that "motes may be housed in alternative housings" without otherwise providing guidance as to their form, materials, or construction.
  - This is an implicit admission that selecting an alternative housing is routine and predictable.
- A PHOSITA would have understood that the shape, size, or material of the housing could be changed without affecting the operation of the sensors or electronic circuitry contained within the housing.
  - '223 Paper 26 at 5–6.

’223 Patent, Ground 1, Claim 5

Claim	Language
5(pre)	A system for monitoring the operation of a railcar comprising:
5(a)	a. one or more sensor units mounted on said railcar, each of said sensor units monitoring an operating parameter of said railcar wherein each of said sensor units comprises
5(b)	a sensor,
5(c)	a power source,
5(d)	a processor,
5(e)	memory,
5(f)	communication circuitry,
5(g)	and software, stored in said memory and executed by said processor, **said software performing the functions of collecting data from said sensor at periodic intervals**,

Claim	Language
5(h)	b. a communication management unit, mounted on said railcar, said communication management unit in wireless communication with said one or more sensor units;
5(i)	wherein said communication management unit **applies heuristics** to analyze data collected from said one or more sensor units
5(j)	(a) to determine if an actual failure exists and
5(k)	(b) **to predict** potential or imminent failures **based on a statistical analysis** of said collected data.

’673 Patent, Ground 1, Claim 14

Claim	Language
14(pre)	A method for monitoring the operation of a railcar performed by a communication management unit disposed on said railcar comprising the steps of:
14(a)	a. wirelessly receiving data from one or more sensing units which periodically collect readings from one or more sensors disposed on said railcar;
14(b)	**b. heuristically analyzing said received data to determine if an actual failure exists on said railcar or to predict potential or imminent failures based on a statistical analysis of said received data; and**
14(c)	c. communicating the results of said analysis to an off-railcar location.

’673 Patent, Ground 1, Claim 21

Claim	Language
21(pre)	A method for monitoring the operation of a railcar comprising:
21(a)	a. collecting data at periodic intervals about one or more operating parameters of said railcar using one or more sensor units provided on said railcar;
21(b)	b. communicating said collected data to a communication management unit;
21(c)	**c. analyzing said collected data by applying heuristics thereto to (i) determine if an actual failure exists and (ii) to predict potential or imminent failures based on a statistical analysis of said collected data.**

LeFebvre discloses the use of heuristics.

- The Board correctly found that *LeFebvre* discloses the use of heuristics.
  - ’223 Paper 15 at 42–45; ’223 Paper 10 at 27–28

[0036] The data control unit **23** is intended to serve several purposes. It coordinates the timing of the cyclic testing performed by the instrumented pad microprocessor and the timing of the messages issuing therefrom. As an aggregator of information, it is programmed to compare information from all of the trucks on the railcar and draws inferences from them as to the status of the car, for example, the data control unit uses inference engine techniques to identify unsatisfactory behavior such as swaying, bouncing or even partial derailment. It passes on information from the com-

[0056] Given that more than one instrumented pad may report misbehavior, then the components of the inference engine in the data control unit take responsibility for making assessments for the whole truck and ultimately for the freight car. When serious trouble is inferred, then messages are sent via the communications link **23***a*, **24** to the locomotive, etc.

[0095] The data control unit in its role as information aggregator merges the data from the pads and makes adjustments as necessary for the slightly different times at which the data was reported and gathered. The data control unit then performs the assessments described above for the inference engine to check if the freight car, its trucks or wheels or axles are behaving sufficiently poorly that a report to the central data handling location or owner or operator or locomotive is needed. If so, then the report can be sent. It is

LeFebvre detects actual failures.

[0060] Wheel condition—A load sensor in the instrumented pad to detect high amplitude loads (compared to the background) that repeat periodically (function of wheel diameter and speed) to identify a flat spot or shelled wheel tread. It may also be possible to identify hollow worn wheels using some of the other sensors in the instrumented pad.

[0061] Wheel derailment—Using the same instrumentation as for the Wheel Condition, but looking for a higher frequency and a similar signal from both wheels in the wheel set. Identifying when a wheel set has derailed prevents a possible full derailment and possible catastrophic consequences.

E.g., '673 Paper 23 at 8–10.

[0062] Truck Hunting—Using load sensors mounted in the instrumented pad so as to detect longitudinal, lateral and yawing forces, monitor rapidly changing loads (and hence the angle of attack of the wheel set) indicative of axle or truck hunting. By analyzing such loads monitored from both wheel sets on a truck, and both trucks on a car, truck and axle hunting as well as truck warp can be identified. Additionally by assessing the angle of attack of wheel sets on each truck, high rotational friction caused by binding side bearings or dry center bowls can be identified. Identifying these conditions helps to prevent damage to freight car trucks and lading as well as to the track infrastructure.

[0064] Displaced roller bearing adapter—By monitoring the load in the instrumented pad legs it is possible to identify

LeFebvre discloses the use of statistical analysis to predict potential or imminent failures.

- "Statistical analysis" is a branch of mathematics dealing with the collection, analysis, interpretation, and presentation of masses of numerical data.
  - '223 Paper 26 at 8.

- *LeFebvre* discloses several techniques that utilize statistical analysis, including:
  - identifying "periodicities" in a "time series" (¶ [0054]);
  - calculating "long term trends" (¶ [0058]);
  - performing "frequency spectrum analysis" (¶ [0059]); and
  - detecting high amplitude loads that repeat periodically (¶ [0060]).
- Additionally, *LeFebvre* expressly discloses that its sensor units engage in statistical sampling of sensor data (¶¶ [0034]–[0035]).

LeFebvre discloses the use of statistical analysis to predict potential or imminent failures.

- *LeFebvre* uses its heuristic methods, which include statistical analysis, to detect potential failures.
  - ’223 Paper 26 at 8–9.

- *LeFebvre* claim 12 (“said values being communicated only upon a determination by the logic circuitry that the values are ***indicative of a potential operating failure***”)

- *LeFebvre* claim 21 (“identifying vibration levels ***indicative of potential failure***”)

- *LeFebvre* claim 22 (“each microprocessor being programmed to a periodically active state to scan the sensed data for ***indications of potential failure***”)

LeFebvre's system collects data at periodic intervals.

LeFebvre's processor "is normally in a passive, low power state, but is programmed to switch on briefly, ***periodically***. It ***gathers readings*** from each of the sensors and performs preliminary analysis of the readings."

> [0034] With reference again to FIGS. **1-3**, in operation, the microprocessor on an instrumented pad **16** is normally in a passive, low power state, but is programmed to switch on briefly, periodically. It gathers readings from each of the sensors and performs preliminary analysis of the readings.

- The Board correctly found that LeFebvre discloses "collecting data from said sensor at periodic intervals."
  - '223 Paper 15 at 41–42.
- Patent Owner and its expert admit that "the same system could infringe both claims 1 and 5."
  - '223 EX2010, ¶ 48; '223 Paper 20 at 19.

’673 Patent, Ground 1, Claim 1

Claim	Language
1(pre)	A method of monitoring operational characteristics of a railcar comprising the steps of:
1(a)	a. receiving data or processed information regarding said operational characteristic from one or more sensing units on said railcar, said sensing units monitoring an operational characteristic of said railcar;
1(b)	b. applying a heuristic to said received data to determine deviations from nominal operating conditions;
1(c)	**c. assigning a severity level to said deviations from nominal operating conditions; and**
1(d)	d. determining an alarm condition based on said assigned severity level.

LeFebvre assigns a severity level to deviations from nominal operating conditions

- In *LeFebvre*, deviations from nominal operating conditions are evaluated and assigned one of two severity levels ('673 Paper 23 at 5):
  - (1) not severe enough to warrant an alarm, or
  - (2) severe enough to warrant an alarm.

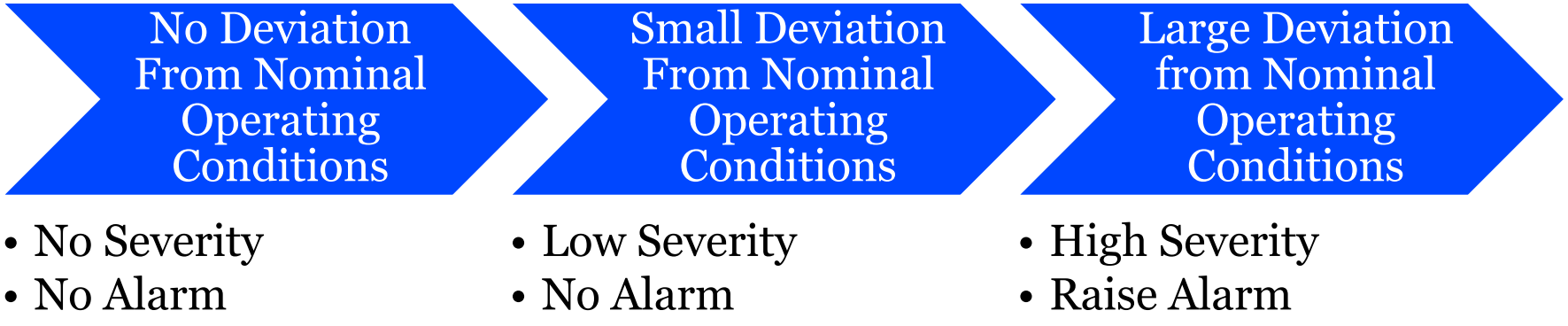

LeFebvre expressly discloses multiple "alarm levels."

[0058] Bearing temperature—A temperature sensor in instrumented pad **16** monitors relative changes in temperature against other bearings and provides an alarm threshold or long term trends to link to bearing condition. The well-being of a roller bearing can be inferred using either trends or alarm levels, avoiding a potential bearing burn off and possible derailment and providing a direct measurement that can be used to avoid false alarms from wayside hotbox detectors. As a further purpose of this invention, the observations from wayside detectors for temperature and other effects can be compared with those from the on-board system for mutual calibration and verification purposes.

'673 Paper 23 at 6.

LeFebvre assigns a severity level to deviations from nominal operating conditions

- *LeFebvre* claims a system for "identifying performance behavior derived from…signals ***considered to be sufficient to cause alarm*** and communicating to the prime mover messages identifying only the performance behavior ***sufficient to cause alarm***." *LeFebvre*, claim 28; *see also* claims 9, 12, 21.
- *LeFebvre's* CMU determines whether "the freight car, its trucks or wheels or axles are behaving ***sufficiently poorly*** that a report to the central data handling location or owner or operator or locomotive is needed. If so, then the report can be sent." *LeFebvre*, ¶ [0095].
- "If such behavior is inferred at the instrumented pad ***and the magnitude is sufficient to cause alarm***, relevant attributes and timing (relative to the time of transmission of report) can be passed to the car's data control unit." *LeFebvre*, ¶ [0055].
- '673 Paper 23 at 4–5; '673 EX1030, ¶¶ 10–11.

Nothing in the claim language requires multiple severity levels or multiple types of alarms

- Claim 1 simply requires assigning "a severity level to said deviations," and "determining an alarm condition based on said assigned severity level."
- *LeFebvre* discloses exactly what claim 1 requires:
  - Small deviations from nominal operating conditions are not severe enough to warrant an alarm.
  - Large deviations from nominal operating conditions are severe enough to warrant an alarm.
  - '673 Paper 23 at 4–5; '673 EX1030, ¶¶ 10–11.

’673 Patent, Ground 1, Claim 10

Claim	Language
10(pre)	A method of monitoring a temperature of a desired part of a railcar, comprising:
10(a)	(a) sensing the temperature of a part of the railcar other than the desired part by use of a temperature sensor in thermal communication with said other part;
10(b)	(b) determining the temperature of the desired part by use of the temperature sensed in step (a);
10(c)	**(c) determining if said temperature of the desired part is outside an acceptable range of temperatures; and**
10(d)	(d) transmitting an alarm if in step (c) it is determined that the temperature of the desired part is outside an acceptable range.

LeFebvre determines whether the wheel bearing is outside an acceptable temperature range.

- The Board correctly found that *LeFebvre* discloses this limitation.
  - ’673 Paper 10 at 20–21; ’673 Paper 23 at 7

[0033] In an exemplary system, the instrumented pads **4** contain several sensors for measurement of dynamic and static vertical loads and shear or lateral forces imposed by the railcar truck and hence by the freight car by the bearing adapters. Conversely, these are the forces which the axles, themselves attached rigidly to the wheels, and subject to track irregularities, are applying to the truck. The exemplary instrumented pads **16** also carry temperature sensors to give an indication of the temperature of the associated bearing, since it is important for safety that a bearing does not become overheated.

[0058] Bearing temperature—A temperature sensor in instrumented pad **16** monitors relative changes in temperature against other bearings and provides an alarm threshold or long term trends to link to bearing condition. The well-being of a roller bearing can be inferred using either trends or alarm levels, avoiding a potential bearing burn off and possible derailment and providing a direct measurement that can be used to avoid false alarms from wayside hotbox detectors. As a further purpose of this invention, the observations from wayside detectors for temperature and other effects can be compared with those from the on-board system for mutual calibration and verification purposes.

Claim 10 does not limit how the temperature of the bearing is determined.

- *LeFebvre* directly measures the temperature of individual bearings. *LeFebvre*, ¶ [0033]; ’673 Paper 23 at 7–8; ’673 EX1030, ¶ 12.
- *LeFebvre* also monitors relative changes in bearing temperature against other bearings. *LeFebvre*, ¶ [0058]; ’673 Paper 23 at 7.
  - This technique would be effective to monitor temperatures under the vast majority of real-world scenarios. ’673 EX1030, ¶ 12.

LeFebvre monitors bearing temperature in the same way as the ’673 Patent.

- The same temperature monitoring technique that Patent Owner criticizes—comparing temperature readings taken from different bearings—is expressly disclosed in the ’673 Patent. (’673 Paper 23 at 8; ’673 EX1030, ¶ 13). For example:
  - “Stage 2: ‘Axle Differential Alarm’: is the condition any bearing that is a predetermined amount hotter than its axle mate” (’673 EX1001, 13:37–39);
  - “Criteria 3—Deviation from Wagon Average Analysis: Calculate the average bearing temperature and standard deviation of each bearing compared to the average of bearing temperatures for the rest of the wagon” (*Id.*, 14:31–34; identical disclosure at 15:15–18).
  - “Criteria 4—Deviation from Fleet Average Analysis: Calculate the average bearing temperature and standard deviation of each bearing compared to the average of bearing temperatures for the rest of the fleet” (*Id.*, 14:40–43; identical disclosure at 15:26–29).

Grounds Based on *Armitage*

Grounds Based on *Armitage*

'223 PATENT

No.	References	Claims
4	*Armitage*	2, 3, and 26–28
5	*Armitage* in view of *LeFebvre*	4–10, 13–18, 20–23, 25, and 29–32
6	*Armitage* in view of *LeFebvre*, *Denny* and *Provasnik*	1 and 24

'673 PATENT

No.	References	Claims
1	*Armitage*	1, 2, 4, 6–11, and 13
2	*Armitage* in view of *LeFebvre*	3, 5, 12–18, and 20–22

Armitage is prior art under § 102(e) as of its provisional application filing date.

- *Armitage* is prima facie prior art under § 102(a) and § 102(e).
- *Armitage* is prior art as of its provisional application filing date (May 11, 2010).
  - A § 102(e) reference is prior art as of its provisional application filing date if "***at least one claim*** of the patent [is] supported by the disclosure of the relied upon provisional application." MPEP § 2136.02(II); *accord* MPEP § 2136.
  - Claim 1 of *Armitage* is supported, for example, by paragraphs [0002], [0007], and [0009] of the Provisional. '223 Paper 26 at 10.
- The entire disclosure of *Armitage* is prior art under § 102(e) as of May 11, 2010.
  - MPEP § 2136.02 ("Under pre-AIA 35 U.S.C. 102(e), the ***entire disclosure*** of…a U.S. patent application publication…can be relied on to reject the claims.")

Timeline of Events: Alleged Prior Conception

March 2010
- Alleged conception ('223 Paper 20 at 26)

May 11, 2010
- Armitage Provisional Filed

August 23, 2010
- '713 Application Filed (*See* '223 Paper 12, 2–4).

May 11, 2011
- Armitage Filed

August 2011
- Alleged reduction to practice ('223 Paper 20 at 26)

June 19, 2012
- '661 Provisional Filed

March 15, 2013
- '223 Patent Filed

Patent Owner has not established a pre-*Armitage* date of conception for any challenged claim.

- "Conception must include **every feature or limitation** of the claimed invention." *Slip Track Sys., Inc. v. Metal-Lite, Inc.*, 304 F.3d 1256, 1263 (Fed. Cir. 2002).
  - *See also Cumberland Pharma. Inc. v. Mylan Inst. LLC*, 846 F.3d 1213, 1218 (Fed. Cir. 2017) (collecting cases).
- Patent Owner presented a lengthy factual timeline in the POR.
- But Patent Owner did not explain how the timeline provides evidence of prior conception for any particular claim.
  - '223 Paper 26 at 12–16.

It is unclear which claims of the ’223 Patent are alleged to antedate *Armitage*.

- In the ’223 POR, Patent Owner alleged that ***all*** challenged claims were conceived prior to *Armitage*. ’223 Paper 20 at 26.

> a. **All Claims of the ’223 Patent Were Conceived By At Least March 2010**

- But in its ’223 Sur-Reply, Patent Owner changed course and alleged that only a subset of the claims were conceived prior to *Armitage*. ’223 Paper 36 at 11.

> [4] For clarity, claims 2–10, 18, 20, 21, 23, and 25–32 are subject to PO’s prior invention evidence.

Patent Owner has not met its burden of production.

- Patent Owner's burden of production required it to clearly show that every limitation of each challenged claim was conceived of prior to *Armitage*.
- It should not fall upon Petitioner, nor the Board, to "play archeologist with the record for arguments that might have been made" had Patent Owner chosen to present them in its POR.
  - *3M Co. v. Evergreen Adhesives, Inc.*, 860 F. App'x 724, 725 (Fed. Cir. 2021) (internal citation omitted).
  - '223 Paper 26 at 15.
- The Sur-Replies include untimely new arguments, yet still fail to establish that each claim limitation was conceived of prior to *Armitage's* priority date.

Patent Owner's evidence shows that conception was not complete in March 2010 as alleged.

- The "Level 2" and "Level 3" algorithms, which are used to predict failures, were not proposed until November 2010. *See* EX2100, 3; EX2097, 1.
- As late as November 2010, the inventors had still not decided where to mount the temperature sensors. *See, e.g.*, EX2093, 1.
- In June and July 2011, the inventors fundamentally changed the manner in which the nodes collect data at "periodic intervals." *See* EX2146, 8–10; EX2147, 16; EX2150, 10–11.
- In July 2011, the team at UTRGV proposed for the first time that some types of analysis could be carried out on the sensing units themselves, rather than on a server. EX2151, 13–19.
  - '223 Paper 26 at 17–18.

Patent Owner's evidence shows that conception was not complete in March 2010 as alleged.

- "Conception is complete only when the idea is so clearly defined in the inventor's mind that only ***ordinary skill*** would be necessary to reduce the invention to practice, ***without extensive research or experimentation***."
  - *Dawson v. Dawson*, 710 F.3d 1347, 1352 (Fed. Cir. 2013)
- "Quite apart from reduction to practice, conception requires that the inventor know how his definite and permanent idea of the complete and operative invention . . . is hereafter to be applied in practice."
  - *Dawson*, 710 F.3d at 1356.
- After March 2010, the inventors continued to engage in extensive research and experimentation, and it was not until August 2011 that they finally "believed the condition monitoring system would work." EX2013, ¶ 52.
  - '223 Paper 26 at 19–20.

Limitations Not Conceived Prior to *Armitage* ('223 Patent)

Claim(s)	Limitation Not Conceived Prior to Armitage
5, 16, 25, 26	"wherein said communication management unit applies heuristics"
3, 6, 7, 9, 13, 15, 16, 19–22, 28	"an alarm condition" / "alarm" / "alarms"
1, 5, 8, 9, 23, 29, 31	"periodically awakening" / "periodic intervals"
2, 5	"monitoring parameters or conditions of the railcar" / "monitoring an operating parameter of said railcar"

'223 Patent, Paper 26 at 19.

Limitations Not Conceived Prior to *Armitage* ('673 Patent)

Claim(s)	Limitation Not Conceived Prior to Armitage
1, 8, 14, 21	"applying a heuristic" / "heuristically analyzing" / "applying heuristics"
1, 6, 8–10, 14–16, 21	"an alarm" / "an alarm condition"
14, 21	"periodically collect readings" / "periodic intervals"
10	"determining the temperature of the desired part by use of the temperature sensed in step (a)"

'673 Patent, Paper 23 at 20.

Patent Owner presented new, untimely arguments in its Sur-Reply.

- Both the ’223 and ’673 Sur-Replies include a newly added table that maps the alleged evidence of conception to the challenged claims.
  - ’223 Paper 36 at 13–20; ’673 Paper 33 at 9–19.
- This argument should have been presented in the POR.
- Because it was presented for the first time in sur-reply, Petitioner has had no opportunity to respond.
- Even if the added tables were timely, they do not account for every claim limitation, and therefore do not establish prior conception.

Patent Owner's Sur-Reply Does Not Establish Conception prior to *Armitage*

See, for example, the '223 Sur-Reply at 15, which addresses claim 5:

5a	*See* 2 above, explaining EX2092; EX2013, ¶11 *See also* p. 28, explaining EX2162 (and describing the "test plan" including "a description of the test equipment, installation/operation instructions and strategy, and output expectations")	*See* 2 above, explaining EX2092 *See also* p. 5, ¶14, explaining EX2162: "…the inventive system includes … temperature sensing devices … installed on … railcars that collect data at periodic intervals and communicate with wireless communication management units (CMU's), wherein the CMU's also receive data from an external (ambient) temperature sensor"

5b	*See* 2 above *See also* p. 33, explaining EX2020; EX2013, ¶20: "…. a cab display indicating messages determined from applying heuristics to the received data, … demonstrating the ability to communicate alerts in a network with other railcars when the bearing temperature is outside of a certain range."	*See* 2 above *See also* p. 3, ¶9: "The data gained from these studies was directly impacting algorithm and heuristics development for eventual evaluation, validation, and testing …. [including] analysis of train hardware in which actual or potential faults were detected." *See also* p. 13, ¶23:

’223 Patent, Ground 5, Claim 5

Claim	Language
5(pre)	A system for monitoring the operation of a railcar comprising:
5(a)	a. one or more sensor units mounted on said railcar, each of said sensor units monitoring an operating parameter of said railcar wherein each of said sensor units comprises
5(b)	a sensor,
5(c)	a power source,
5(d)	a processor,
5(e)	memory,
5(f)	communication circuitry,
5(g)	and software, stored in said memory and executed by said processor, **said software performing the functions of collecting data from said sensor at periodic intervals**,

Claim	Language
5(h)	b. a communication management unit, mounted on said railcar, said communication management unit in wireless communication with said one or more sensor units;
5(i)	**wherein said communication management unit applies heuristics to analyze data collected from said one or more sensor units**
5(j)	**(a) to determine if an actual failure exists and**
5(k)	**(b) to predict potential or imminent failures based on a statistical analysis of said collected data.**

It would have been obvious to modify *Armitage* to incorporate *LeFebvre's* power saving features.

- A PHOSITA would have incorporated LeFebvre's power saving features into Armitage's sensor nodes in order to save power.
  - '223 Paper 10 at 71 (citing *LeFebvre* ¶¶ [0034]–[0035]; EX1003, ¶ 350.).
- LeFebvre's power management techniques are fully compatible with "continuous" monitoring of railcar components as understood by a PHOSITA.
  - '223 Paper 26 at 23 (citing EX1033, ¶ 13).
- LeFebvre describes *its own* system as "continuously monitoring" the condition of the railcar. *LeFebvre*, ¶¶ [0004], [0006].

Armitage uses statistical analysis to detect and predict failures.

- *Armitage* repeatedly discloses the use of statistical techniques, including:
  - "Control node 130 could process the sensor information to determine ***anomalies from an average***, such as an anomaly from a ***running average of the temperature*** of all wheels on railway car 110." (¶ [0029])
  - "***Statistically significant deviations*** are derived from a series of sensor data captured over time for one or several members of the population of sensors." (¶ [0030])
  - "When one or more of the sensor nodes begin to deviate from the others in the population, then a failure condition could be determined." (¶ [0030])
  - "In an example wheel rotation, 60 milliseconds of vibration are sampled every two seconds and the vibrations are ***averaged*** (along with determining ***minimums and maximums***) every sixty seconds and stored. Time series analysis could then performed on the readings to determine the failure conditions." (¶ [0045])
  - *See* '223 Paper 10 at 65–66.

Armitage categorizes different types of failures using a "health scorecard."

[0044] Each event could be ranked by severity and status could be provided periodically, such as twice daily, to provide railcar location and system status. The event ranking could include a 'yellow' condition which indicates that a railway car requires service, and a 'red' condition which indicates that a sensor has detected a serious deviation from normal operations that requires immediate service. In some examples, each

Yellow Condition

- Railway car requires service

Red Condition

- ***Serious*** deviation that requires ***immediate*** service

’223 Patent, Ground 5, Claim 23

Claim	Language
23(pre)	A monitoring device for monitoring temperature on a railcar, comprising:
23(a)	**a housing mountable on a railcar**;
23(b)	a temperature sensor configured to be in thermal communication with a portion of the railcar to be monitored for temperature, which portion is external to said housing;
23(c)	electrical circuitry in communication with said temperature sensor for obtaining information regarding the temperature being sensed, **said electrical circuitry positioned within said housing**;

Claim	Language
23(d)	a power source electrically connected to said electrical circuitry for providing power thereto, **said power source positioned within said housing**; and
23(e)	a communication device capable broadcasting information regarding the temperature sensed, **said communication device positioned within said housing**;
23(f)	wherein the power consumption of said monitoring device is managed by placing said monitoring device in a standby state and periodically awakening said monitoring device to collect readings from said temperature sensor and to transmit the information regarding the temperature sensed via said communication circuitry.

Armitage discloses a housing mountable on a railcar.

- *Armitage's* sensor nodes "could each be encased in a potted, weatherproof, or sealed enclosure, or may have openings for air circulation." *Armitage*, ¶¶ [0034], [0015].
- The sensor nodes may be mounted on the railcar using mechanical fasteners, adhesive methods, or magnets. *Armitage*, ¶¶ [0015], [0034].
  - '223 Paper 10 at 60.

Armitage's circuitry, power, and communications devices are located within the housing.

- Figure 6 depicts "processing system 620" within the sensor node 600. *Armitage*, ¶ [0053].
- Processing system 620 "comprises specialized circuitry," i.e., electrical circuitry, which operates to "process the sensor information." *Armitage*, ¶ [0055].
- A PHOSITA would understand—and Figure 6 confirms—that in *Armitage's* system, this electrical circuitry may be positioned within the sensor node's housing. '223 EX1003, ¶ 264.
- *See* '223 Paper 10 at 61.

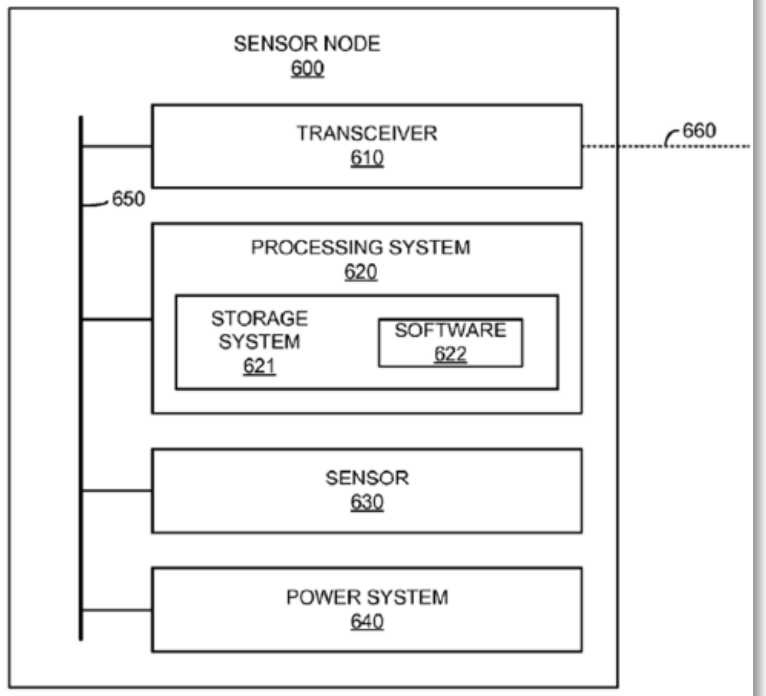

FIGURE 6

Armitage's circuitry, power, and communications devices are located within the housing.

- "Power system 640 includes circuitry and a power source to provide power to the elements of sensor node 600." *Armitage*, ¶ [0057].
- "[T]he transceiver portion includes a wireless transceiver and antenna for wirelessly communicating with control node 130." *Armitage*, ¶ [0054].
- A PHOSITA would understand—and Figure 6 confirms—that in *Armitage's* system, both the power source and the wireless transceiver may be positioned within the sensor node's housing. '223 EX1003, ¶ 264.
- *See* '223 Paper 10 at 62.

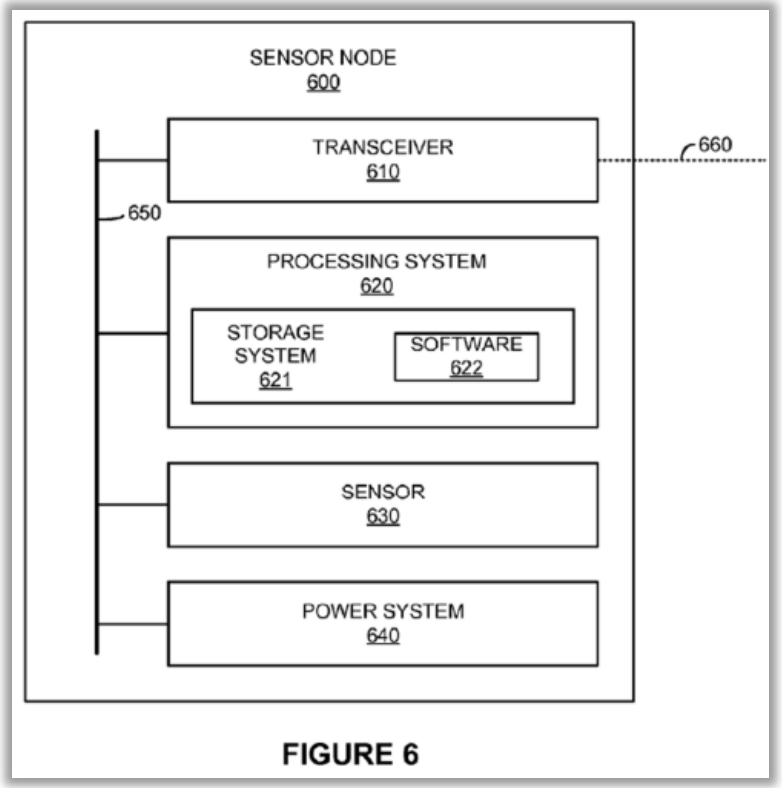

FIGURE 6

Patent Owner's Revised Motion to Amend

Grounds of Invalidity (§§ 101, 103, and 112)

Patent	Ground	Claims
’223	Written Description/New Matter	34–58
’223	Enablement	34–58
’223	Indefiniteness	34–58
’223	Obviousness	33–61
’673	Written Description/New Matter	23–43
’673	Enablement	23–43
’673	Indefiniteness	33–43
’673	Patent Ineligible Subject Matter	23–43
’673	Obviousness	23–43

Written Description (New Matter)

Patent Owner bears the burden of showing that substitute claims do not add new matter.

- Patent Owner bears the burden of showing, by a preponderance of the evidence, that its substitute claims are supported by written description in the original specification. 35 U.S.C. § 316(d)(3); 37 C.F.R. § 42.121(d)(1).
- If Patent Owner cannot make this threshold showing, the Motion must be denied. *Aqua Prod., Inc. v. Matal*, 872 F.3d 1290, 1304 (Fed. Cir. 2017).
- Patent Owner has not met this burden for either Motion.

There is no written description of a generic sensor unit "mounted on a sidewall of a bearing adapter"

Patent	Limitation	Claim Language
'673	23(a)	a. receiving data or processed information regarding ~~said~~ an operational characteristic of a railcar from one or more sensing units, each mounted on a sidewall of a bearing adapter on said railcar, said sensing units monitoring ~~an~~ said operational characteristic of said railcar, wherein the operational characteristic is a condition of a bearing proximate to the bearing adapter;
'673	36(a)	a. wirelessly receiving data from one or more sensing units which periodically collect readings from one or more sensors disposed on a sidewall of a bearing adapter on said railcar;
'673	42(a)	a. collecting data at periodic intervals about one or more operating parameters of said railcar using one or more sensor units provided on a sidewall of a bearing adapter on said railcar, wherein the one or more operating parameters comprise a condition of a bearing proximate to the bearing adapter;
'223	34(a)	a plurality of sensor devices each located on and mounted to a sidewall of a bearing adapter of the railcar for monitoring parameters or conditions of a bearing of the railcar, each of said sensor devices being separate from one another and including a sensor for monitoring one of said parameters or conditions of the bearing of the railcar;
'223	42(a)	a. one or more sensor units mounted to a sidewall of a bearing adapter on said railcar, each of said sensor units monitoring an operating parameter of said railcar wherein each of said sensor units comprises

The sensor unit shown in Figs. 3 and 3A monitors *temperature.*

The individual motes **10** are mounted on the areas of interest on a railcar **38**. As an example, FIGS. **3** and **3A** show a temperature sensing mote **10** of the type described above mounted to a bearing adapter **12** of a railcar wheel bearing **39** of a railcar. The unit may be attached using a thermally conductive epoxy adhesive between the brass plug **22** and the adapter **36** to ensure good heat transfer to the temperature sensor and mechanical fasteners such as self tapping screws to hold the mote **10** in place. In this particular example, motes **10** may be attached to all 8 wheel bearing adapters **12** of each railcar wheel **40**. In addition, an ambient temperature sensor mote **10** may also be mounted on an area of the railcar **38** receiving free airflow. FIG. **4** shows a mote **10** mounted on the body of a railcar **38** for monitoring the ambient temperature.

’223 Patent, 5:31–34.

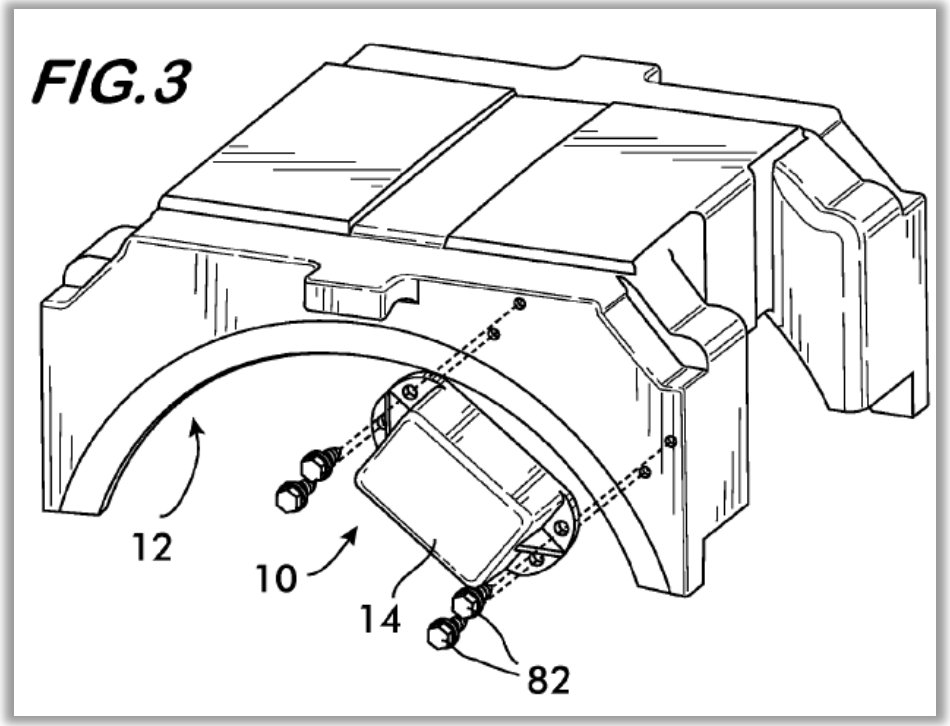

Other types of sensors require different housing configurations and mounting locations.

perature reading is desired. As one of ordinary skill would recognize, the configuration of the motes **10** with respect to the sensor **20** is dependent upon the type of sensor and the type of data desired. Sensor **20** can be any type of sensor, including for example, a temperature sensor, a pressure sensor, a load cell, a strain gauge, a hall effect sensor, a vibration sensor, an accelerometer, a gyroscope, a displacement sensor, an inductive sensor, a piezio resistive microphone or an ultrasonic sensor. In addition, the sensor may be a type of switch, including, for example, reed switches and limit switches. An example of another type of mote sensor which uses a strain gauge, e.g. a hand brake monitor sensor, is described in U.S. patent publication 2012/0046811 (U.S. patent application Ser. No. 12/861,713 filed Aug. 23, 2010), the disclosure of which is hereby incorporated herein by reference.

’223 Patent, 4:39–42.

- A PHOSITA would understand that many of the listed sensor types (e.g., strain gauges, gyroscopes, reed switches, limit switches) would serve no purpose if mounted on the sidewall of a bearing adapter.
- No other type of sensor is described as suitable for mounting on the sidewall of a bearing adapter.
- ’223 Paper 41, 2–3; EX1035, ¶¶ 18–20.

The specification contains no blaze marks directing a PHOSITA to this combination.

- *Hyatt v. Dudas*, 492 F.3d 1365, 1371 (Fed. Cir. 2007) (specification must "provide support for the *linkage of the claimed elements* creating the embodiment").
- *Novozymes A/S v. DuPont Nutrition Biosciences APS*, 723 F.3d 1336, 1349 (Fed. Cir. 2013) ("an amalgam of disclosures plucked selectively from the [original] application" is not sufficient).
- *Indivior UK Ltd. v. Dr. Reddy's Lab'ys. S.A.*, 18 F.4th 1323, 1329 (Fed. Cir. 2021) ("written description sufficient to satisfy the requirement of the law requires a statement of an invention, not an invitation to go on a hunting expedition to patch together after the fact a synthetic definition of an invention").

There is no written description support for the claimed "numeric values" limitations

Patent	Limitation	Claim Language
'673	23(b)	b. determining the condition of the bearing by applying a heuristic to said received data to determine deviations from nominal operating conditions, wherein the heuristic correlates one or more numeric values derived from the data or processed information to the condition of the bearing;
'673	36(b)	b. heuristically analyzing said received data to: (i) determine a condition of a bearing proximate to the bearing adapter based on correlations between the data and a plurality of possible values indicative of the condition of the bearing; and
'673	43(a)	The method of ~~claim 21~~claim 42, wherein the collected data includes one or more numeric values based on data obtained at the bearing adapter, further comprising the steps of: assessing the ~~collected data~~ one or more numeric values to determine if an alarm condition exists;
'223	34(g)	wherein at least one of the communication management unit or the remote station is configured to (i) correlate one or more numeric values derived from the data to the condition of the bearing, (ii) determine a severity of a condition of the bearing, and (iii) determine an alarm condition based on the severity of the condition of the bearing, wherein said alarm condition comprises one or more recommended actions to be taken with respect to the bearing
'223	42(g)	software, stored in said memory and executed by said processor, said software performing the functions of collecting data from said sensor at periodic intervals and calculating one or more numeric values based on the collected data, wherein the one or more numeric values represent a condition of a bearing; and

Corrected ’673 claim 42 encompasses both numeric and non-numeric data.

- Claim 42 no longer refers to “numeric values.”
- The “numeric values” limitation is introduced in dependent claim 43.

Claim 43 (Substitute for claim 22, if found unpatentable)

~~22.~~43. The method of ~~claim 21~~claim 42, wherein the collected data includes one or more numeric values based on data obtained at the bearing adapter, further comprising the steps of:

assessing the ~~collected data~~ one or more numeric values to determine if an alarm condition exists; and

wirelessly communicating said alarm condition to an off railcar location.

There is no written description support for the claimed "numeric values" limitations.

- Nothing in the specification defines "numeric values" or explains how numeric values differ from non-numeric values.
- Even if a PHOSITA could generalize from the disclosed examples of "heuristics," that is insufficient to show written description.
  - Written description support "does not extend to subject matter which is not disclosed, but would be obvious over what is expressly disclosed. It extends only to that which is disclosed." *Lockwood v. Am. Airlines, Inc.*, 107 F.3d 1565, 1571–72 (Fed. Cir. 1997).
  - '223 Paper 41 at 3–4.

’223 Claims 34 and 42: “land-based remote station”/“land-based remote unit”

Limitation	Claim Language
Limitation 34(g)	wherein at least one of the communication management unit or the remote station is configured to (i) correlate one or more numeric values derived from the data to the condition of the bearing, (ii) determine a severity of a condition of the bearing, and (iii) determine an alarm condition based on the severity of the condition of the bearing, wherein said alarm condition comprises one or more recommended actions to be taken with respect to the bearing.
Limitation 42(l)	c. a land-based remote base unit, in wireless communication with said communication management unit, configured to: (i) receive data from said communication management unit; (ii) determine a severity of the condition of the bearing based on the data received from the communication management unit; (iii) determine an alarm condition based on the severity of the condition of the bearing, wherein said alarm condition comprises a recommended action with respect to the bearing.

’223 Claim 34: “a non-flexible material that is resistant to environmental damage”

- No description of the broad genus of materials encompassed by claim 34.
- Claim 34 is not limited to the disclosed “UV rated polymer.”
- ’223 Paper 41 at 6.

With reference to FIGS. **1**, **2**, **3** and **3**A, an exemplary mote **10** is now described. In this particular embodiment, the mote **10** is configured to be mountable to the surface of bearing adapter **12** of a railcar for monitoring the temperature of the wheel bearing. The mote **10** has a housing **14** having a first or lid section **16** and a second or base section **18**. Preferably, the housing sections **16** and **18** are composed of a hard plastic resistant to environmental damage, such as a UV rated polymer, e.g., a polycarbonate/ABS blend, and when fully assembled is weatherproof. After the various components are installed within the housing **14** as described below, a potting material (not shown) is provided through openings in the housing **14** to maintain, encapsulate and environmentally seal the components within. Any suitable electrical potting mate-

’223 Paper 41 at 6; ’223 EX1001, 4:5-10

’673 Claim 33: “calibrated correlations”

- The specification does not disclose the claimed plurality of temperature values nor the plurality of temperatures that are expected.
- No “calibrated correlations” between these values are disclosed in the specification.
- The specification also fails to disclose or describe “standard operations of the railcar.”

Limitation 33(b)

(b) determining the temperature of the desired part by use of the temperature of the part sensed in step (a) and **calibrated correlations** between **a plurality of temperature values for the desired part** and **a plurality of temperatures that are expected for the part during standard operations of the railcar;**

’673 Paper 37 at 8–9.

’673 Claim 33: “temperatures”/“temperature value(s)”

Claim	Term
33(b)	“a plurality of temperature values for the desired part”
33(b)	“a plurality of temperatures that are expected for the part during standard operations of the railcar”
33(c)	“an acceptable range of temperatures indicating operating conditions expected for the desired part during the operation of the rail”
33(c)	“at least one defined temperature value associated with the desired part”
33(d)	“a predetermined reference temperature value”

Enablement

Broad claim limitations that require determining the condition of a bearing are not enabled.

Patent	Claim	Claim Language
’223	34	“correlate one or more numeric values derived from the data to the condition of the bearing,” “determine a severity of the condition of the bearing”
’223	42	“correlating one or more numeric values derived from the data to the condition of the bearing,” “determining a severity of the condition of the bearing”
’673	23	“determining the condition of the bearing by applying a heuristic”, “assigning a severity level”
’673	36	“determine a condition of the bearing,” “assign a severity level”
’673	42	“determine a condition of the bearing,” “assign a severity level”

The specification does not enable a PHOSITA to practice the full scope of these broad claims.

- "[T]he specification must enable the full scope of the invention as defined by its claims. The more one claims, the more one must enable." *Amgen Inc. v. Sanofi*, 598 U.S. 594, 610 (2023).
- Here, the claims broadly encompass using ***any possible heuristic*** to correlate ***any possible characteristic*** of a wheel bearing with the condition of the bearing.
- Similarly, the claims broadly encompass a "severity level" to deviations from "nominal operating conditions" for ***any possible characteristic*** of a wheel bearing.
  - Note that several claims are even broader and encompass monitoring ***any part*** of a railcar, rather than only a bearing.
- The specification does not enable a PHOSITA to practice the full scope of these claims. '673 Paper 37 at 13–15.

’673 Claim 33: “calibrated correlations”

- A team of academic researchers at UTRGV worked diligently for several years to develop a set of temperature correlations.
  - See EX2013 at ¶ 9 (work began “in the 2008 and 2009 timeframe”);
  - *Id.*, ¶ 41 (referencing May 18, 2011 call regarding ongoing “node temperature calibration and data analysis”);
  - ¶ 44 (“by at least August 2, 2011, we believed the condition monitoring system would work”).
- The temperature correlations developed by UTRGV are not disclosed in the specification.
- Undue experimentation would be required to develop the correlations independently.

Limitation 33(b)

(b) determining the temperature of the desired part by use of the temperature of the part sensed in step (a) and **calibrated correlations** between **a plurality of temperature values for the desired part** and **a plurality of temperatures that are expected for the part during standard operations of the railcar;**

’673 Paper 37 at 15–16.

Indefiniteness

’223 Claim 34: “a non-flexible material that is resistant to environmental damage”

- How is flexibility measured?
- How “non-flexible” must the material be?
- How is resistance to environmental damage measured?
- How “resistant to environmental damage” must the material be?

With reference to FIGS. **1**, **2**, **3** and **3**A, an exemplary mote **10** is now described. In this particular embodiment, the mote **10** is configured to be mountable to the surface of bearing adapter **12** of a railcar for monitoring the temperature of the wheel bearing. The mote **10** has a housing **14** having a first or lid section **16** and a second or base section **18**. Preferably, the housing sections **16** and **18** are composed of a hard plastic resistant to environmental damage, such as a UV rated polymer, e.g., a polycarbonate/ABS blend, and when fully assembled is weatherproof. After the various components are installed within the housing **14** as described below, a potting material (not shown) is provided through openings in the housing **14** to maintain, encapsulate and environmentally seal the components within. Any suitable electrical potting mate-

’223 Paper 41 at 7-8; ’223 EX1001, 4:5-10

Obviousness

’223 Patent: Grounds of Invalidity (Obviousness)

- Petitioner’s Opposition to the Revised MTA (Paper 41) asserted the following grounds under § 103:

No.	References	Claims
1	*Armitage* in view of *LeFebvre*, *Barone*, *Moretti*, and *Brandmeier*	34–58
2	*LeFebvre* in view of *Armitage*, *Barone*, *Moretti*, and *Brandmeier*	34–58
3	*Armitage* in view of *LeFebvre*, *Denny*, *Provasnik*, and *Culbertson*	33, 59–61
4	*LeFebvre* in view of *Armitage*, *Denny*, *Provasnik*, and *Culbertson*	33, 59–61

’223 Paper 41 at 10.

’673 Patent: Grounds of Invalidity (Obviousness)

- Petitioner’s Opposition to the Revised MTA (Paper 37) asserted the following grounds under § 103:

No.	References	Claims
1	*Armitage* in view of *LeFebvre*, *Barone*, *Moretti*, *Inbarajan*, and *Betters*	23–43
2	*LeFebvre* in view of *Armitage*, *Barone*, *Moretti*, *Inbarajan*, and *Betters*	23–43

’673 Paper 37 at 17.

Moretti
U.S. Patent No. 6,672,681

Moretti discloses a system that utilizes a plurality of sensors to monitor the wheel bearings on a railcar, wherein the sensors communicate with a control unit located on the railcar.

Moretti specifically discloses a sensing device that monitors both temperature and accelerations emanating from a railcar wheel bearing.

- ’673 Paper 37 at 17–19 (citing *Moretti*, EX1022 at (57) Abstract, 3:57-62).

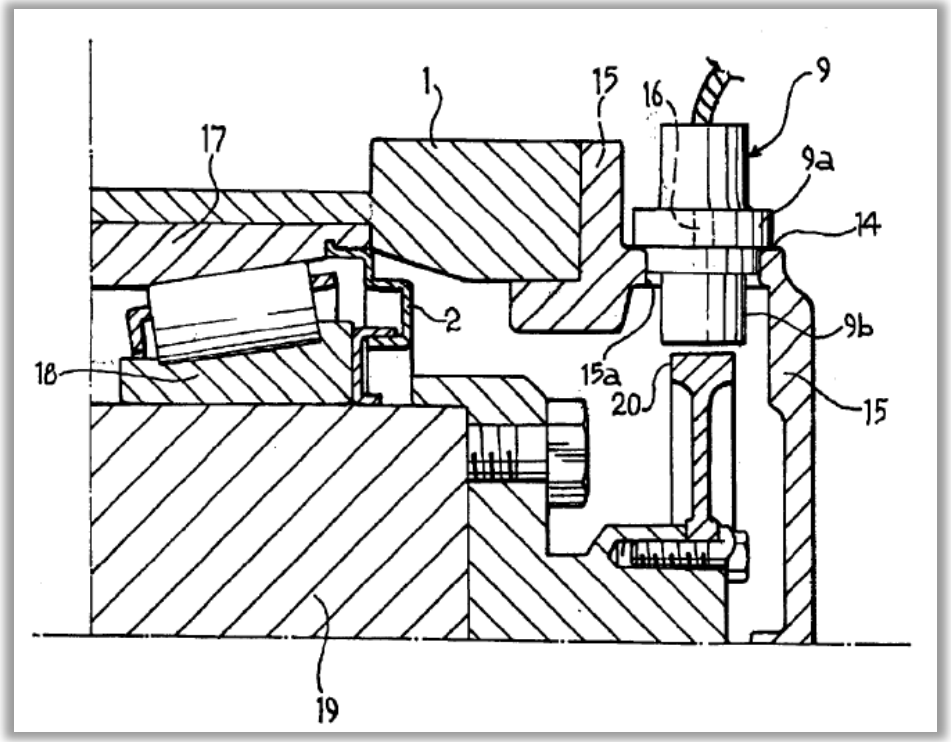

Inbarajan
U.S. Patent No. 7,551,063

Inbarajan is directed to a vehicle email notification method and system. ’673 EX1036, (57) Abstract, 5:58–65.

The monitoring and reporting system described by *Inbarajan* is broadly applicable to a variety of vehicle types, including railcars. ’673 EX1035 (Ricca Dec.), ¶ 53.

- ’673 Paper 37 at 18.

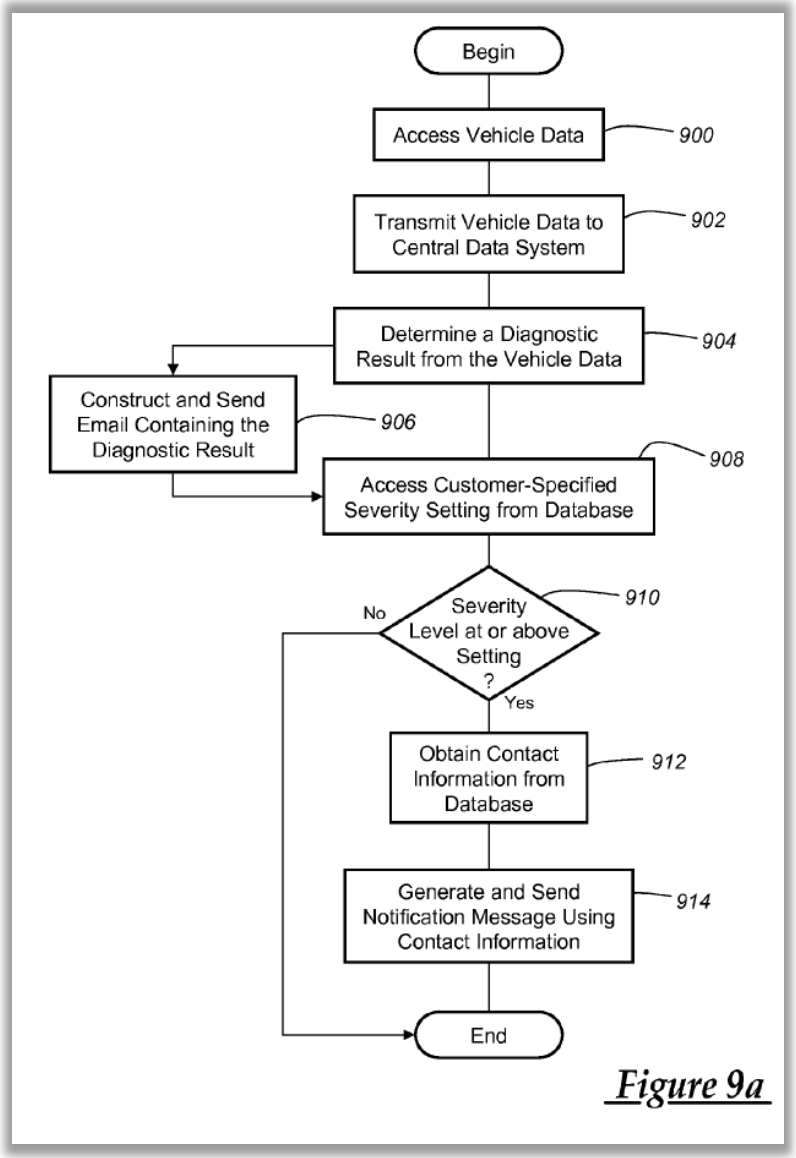

Betters
U.S. Patent No. 7,359,777

Betters is directed to an aircraft monitoring system that enables "problems [to] be predicted and addressed earlier than is possible by using conventional methodology." '673 EX1037, 1:12–15.

The monitoring and reporting system described by *Betters* is broadly applicable to a variety of vehicle types, including railcars. '673 EX1035 (Ricca Dec.), ¶ 53.

- '673 Paper 37 at 18.

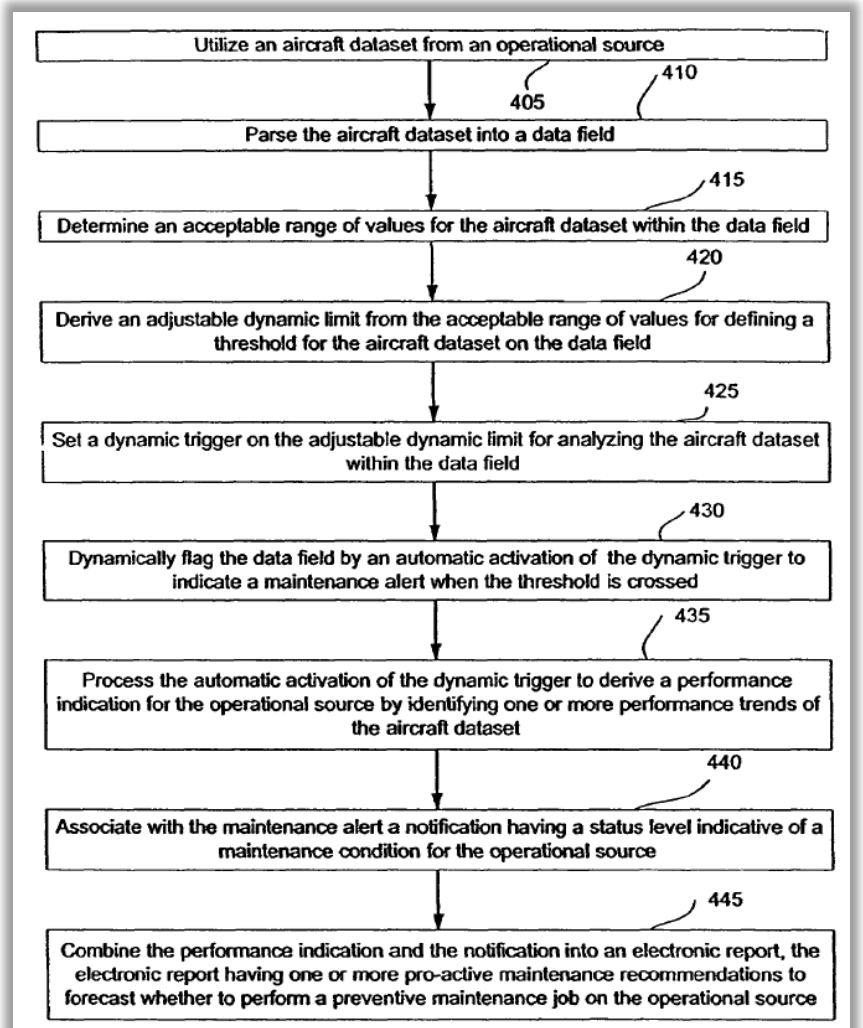

FIG. 4

Brandmeier
U.S. Patent Publication No. 2008/0072670 A1

Brandmeier discloses a sensor device housing designed to be mounted on a surface of a motor vehicle.

Brandmeier provides evidence that rigid sensor device housings and their benefits were known in the art.

- ’223 Paper 41 at 11 (citing EX1031, (57) Abstract, ¶ [0027], claims 11–12; EX1035 (Ricca Dec.), ¶ 40).

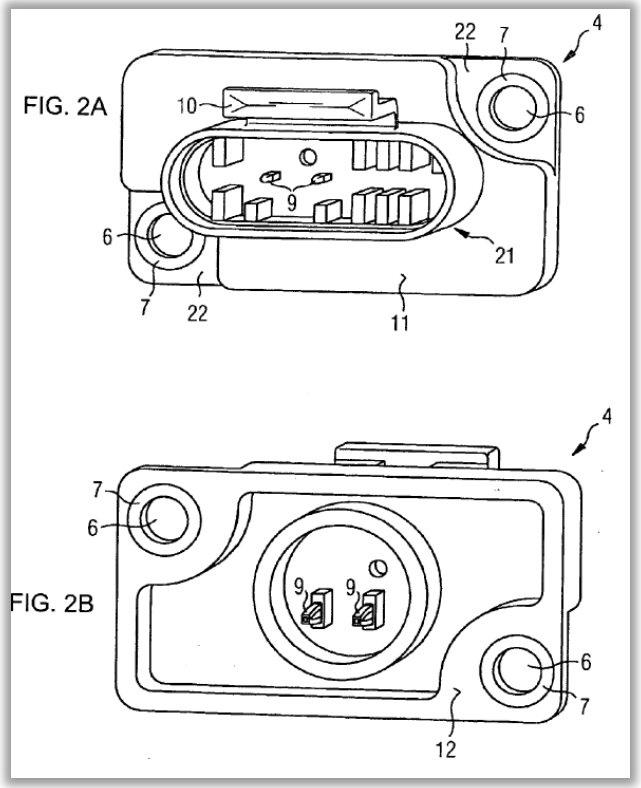

Culbertson
U.S. Patent No. 7,665,890

Culbertson discloses a temperature sensing probe that is suitable for use in harsh environments including, for example, high vibration and temperature.

- ’223 Paper 41 at 22 (citing EX1032, (57) Abstract, 10:37–56; EX1035, ¶ 83).

A PHOSITA would have understood that *Culbertson’s* temperature sensing probe is suitable for monitoring railcar bearings as disclosed by *LeFebvre* and *Armitage*.

- ’223 Paper 41 at 23 (citing EX1035, ¶ 85).

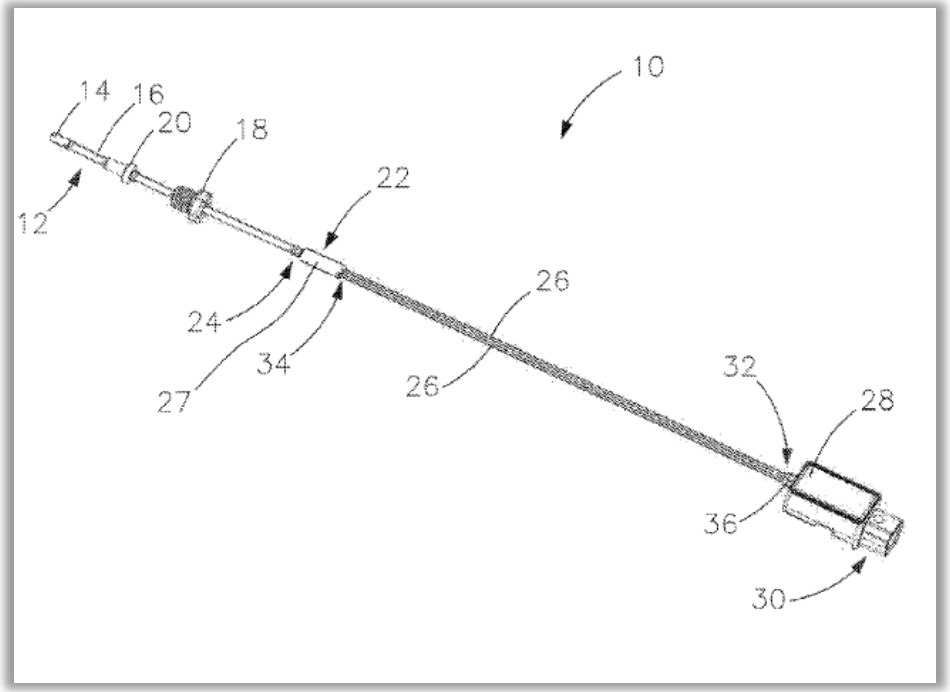

The prior art discloses sensor units mounted to the sidewall of a bearing adapter.

- *Armitage* discloses that its sensor nodes are "attached or coupled to the associated undercarriage element," which may be a "bearing or bearing box." EX1006, ¶¶ [0013]–[0015].
- *Armitage* discloses that the sensor node is preferably attached to a "non-rotating structure," such as a "bearing mount." *Id.*, ¶ [0034].
- A PHOSITA would have understood that both thermometers and accelerometers can be mounted to the sidewall of a bearing adapter to measure heat and vibrations, respectively, emanating from the bearing.
  - '223 Paper 41 at 12.

The prior art discloses sensor units mounted to the sidewall of a bearing adapter.

Barone expressly discloses a sensor node mounted on the sidewall of a bearing adapter as required by the substitute claims. EX1007, ¶¶ [0289]–[0293], Figs. 11–13.

A PHOSITA would have been motivated to mount a sensor node on the sidewall of a bearing adapter because it is an easily accessible, non-rotating surface that transmits heat and vibrations emanating from the bearing. ’223 EX1035, ¶ 47.

- ’223 Paper 41 at 12–13.

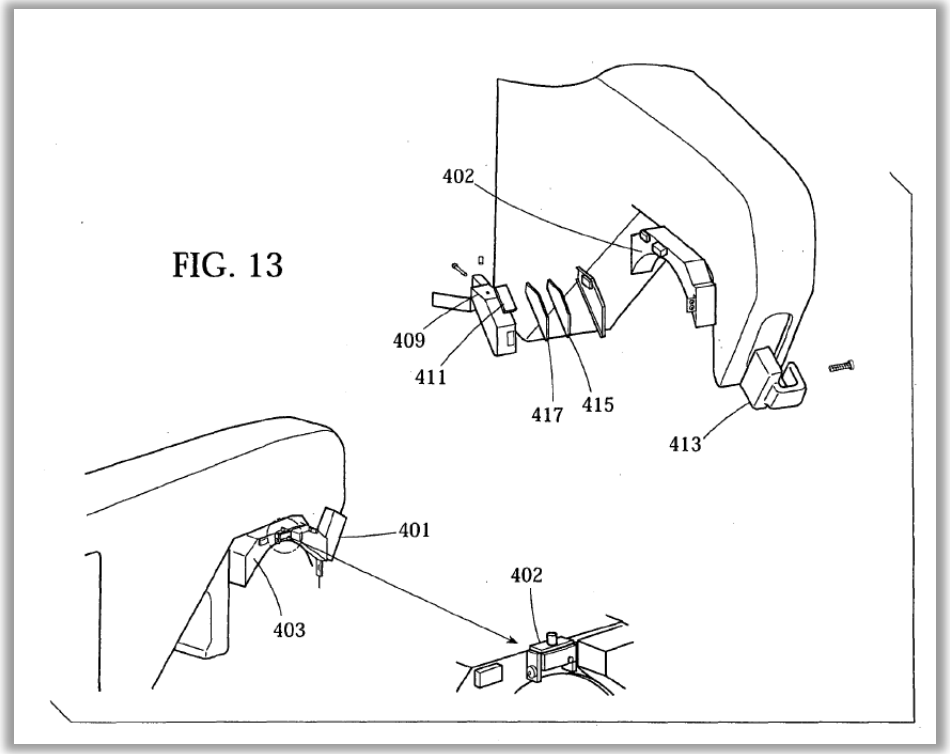

The prior art discloses a non-flexible, durable housing.

- Rigid, durable materials, including plastics and metals, have been used to protect sensitive electronic components for as long as electronic components have existed. ’223 EX1035, ¶¶ 50–51.
- For example, Brandmeier discloses a sensor device housing made from a rigid, durable material that is designed to be mounted on a surface of a motor vehicle.
- It would have been obvious to construct a housing from a rigid, durable material in order to protect the components within.
  - ’223 Paper 41 at 14.

The prior art discloses the claimed "heuristics" and "correlating" steps.

- *Armitage* discloses that the sensor node is preferably attached to a "non-rotating structure," such as a "bearing mount." *Id.*, ¶ [0034].
  - *Armitage's* preferred embodiment therefore requires a heuristic that ***correlates*** the measured temperature of the bearing mount with the inferred temperature of the bearing.
- Similarly, *LeFebvre's* instrumented pad 16 measures the temperature of wheel bearing adapter 4, which can be used to infer the temperature of wheel bearing 2a. EX1005, ¶ [0019], Fig. 4.
  - *LeFebvre's* system therefore uses a heuristic that ***correlates*** the measured temperature of the bearing adapter with the inferred temperature of the bearing.
- '223 Paper 41 at 15–16.

The prior art discloses the use of multiple severity levels.

- *LeFebvre* discloses the use of bearing temperature "alarm levels" to infer the severity of a problem. EX1005, ¶ [0058].
- *Armitage* discloses a color-coded system to indicate the severity of a detected problem condition. EX1006, ¶ [0044].
- *Inbarajan* discloses a similar color-coded system having red, yellow, and green severity levels. '673 EX1036, 18:67–19:11, claim 4.
- *Betters* discloses a system having "a plurality of possible aircraft system operating condition severity levels." '673 EX1037, clam 1.
  - '223 Paper 41 at 16–17; '673 Paper 37 at 23.

The prior art discloses the use of alarms that include a recommended corrective action.

- *Armitage* discloses a "railway health scorecard" that recommends a course of action based on the severity level. EX1006, ¶ [0044].
- *Barone's* system prompts a human to take appropriate action when a problem is detected. EX1007, ¶¶ [0036], [0164], [0191].
- *Inbarajan* discloses that high severity diagnostic results can be "accompanied by a stronger warning and a link to a dealer to schedule servicing." '673 EX1036, 17:8–16.
  - '223 Paper 41 at 17–18; '673 Paper 37 at 24–25.

The prior art discloses the use of accelerometers to measure bearing vibrations.

- It was known as early as the 1980s that "vibrations of bearing boxes change their nature when faults arise." '223 EX1029, 3:17–19; '223 EX1035, ¶ 73.
- *Armitage* and *LeFebvre* each disclose sensor nodes that include accelerometers. EX1006, ¶¶ [0013]–[0015], [0025], [0027]; EX1005, claims 12, 21.
- *Barone* discloses an accelerometer mounted on the sidewall of a bearing adapter. EX1007, ¶¶ [0045], [0289]–[0293], Figs. 11–13.
- *Moretti* teaches that it is preferable to mount a vibration sensor on the bearing box wall "at a position vertically aligned with the axis of rotation of the bearing, where the vibrations are more intense." '223 EX1028, 3:22–28
  - '223 Paper 41 at 20; '673 Paper 37 at 26.

’223 Patent, Claim 33

Claim	Language
33(pre)	A sensor device for monitoring temperature on a railcar, comprising:
33(a)	a housing providing a first piece mountable on a railcar;
33(b)	a temperature sensor;
33(c)	electrical circuitry in communication with said temperature sensor via a cable for obtaining information regarding the temperature being sensed, wherein said electrical circuitry is positioned within said housing, and said cable has a proximal end disposed in the housing and a distal end residing external to said housing;
33(d)	a power source electrically connected to said electrical circuitry to[[for]] provide[[ing]] power thereto, said power source positioned within said housing;

Claim	Language
33(d)	a probe providing a second piece external to and separated from the first piece provided by said housing, said second piece ~~and which probe~~ comprising a sensor probe head that (i) is spaced apart from the housing, (ii) has a body formed of a heat conductive material, (iii) has a connector electrically interfaced with said temperature sensor and configured to connect to a corresponding electrical connector at the distal end of the cable and includes said temperature sensor, and (iv) has a magnet positioned in the body adjacent to a portion of the connector extending inside the body, the magnet configured to magnetically attract the part of the railcar against which the sensor probe head will be placed; and
33(e)	a communication device configured to ~~capable of~~ broadcast[[ing]] information regarding the temperature sensed, said communication device positioned within said housing;
33(f)	wherein the power consumption of said sensor device is managed by placing said sensor device in a standby state and periodically awakening said sensor device to collect readings from said temperature sensor and to transmit the information regarding the temperature sensed via said communication device ~~circuitry~~.

Culbertson discloses a sensor probe head as required by Limitation 33(d).

As shown in Fig. 1, *Culbertson* discloses a sensor probe head—temperature probe **12**—that includes a tip cap **14** at its distal end, a probe body **16**, a collar **20**, a mounting connector **18**, and a proximal end **24**.

- ’223 EX1032, 4:13–28
- ’223 Paper 41 at 28–29 (citing EX1035, ¶ 88).

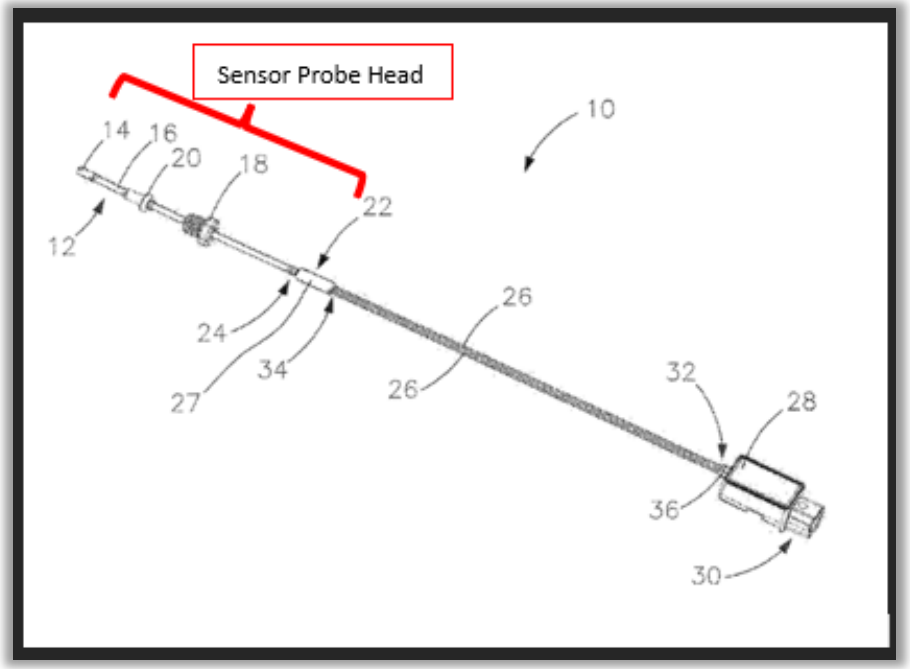

Culbertson discloses a sensor probe head as required by Limitation 33(d).

The sensor probe head (i.e., temperature probe 12) has a probe body 16 which may be formed from a metal tube 94 (i.e., a heat conductive material).

The distal end of probe 12 also has a tip cap 14 that is preferably formed of a metal alloy (i.e., a heat conductive material).

- ’223 Paper 41 at 28–29.

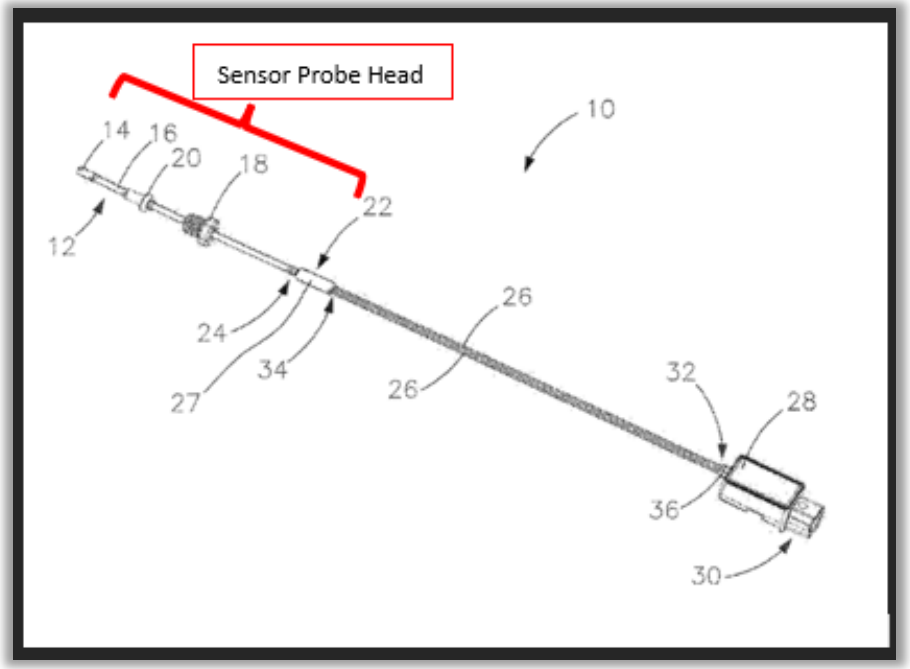

It would have been obvious to add a magnet to *Culbertson's* probe.

Culbertson does not expressly disclose the use of a magnetic attachment.

However, a PHOSITA would have understood that placing a magnet inside probe body **16** (i.e., inside metal tube **94**) would allow the sensor probe head to sit flush against a metal surface to be measured.

Placing magnet within proximal end **24** of the probe body **16** would be useful to minimize the vibration or movement of the adjacent transition component **22** (which contains delicate electrical connectors that could become detached).

- '223 Paper 41 at 29–30.

It would have been obvious to place a magnet here.

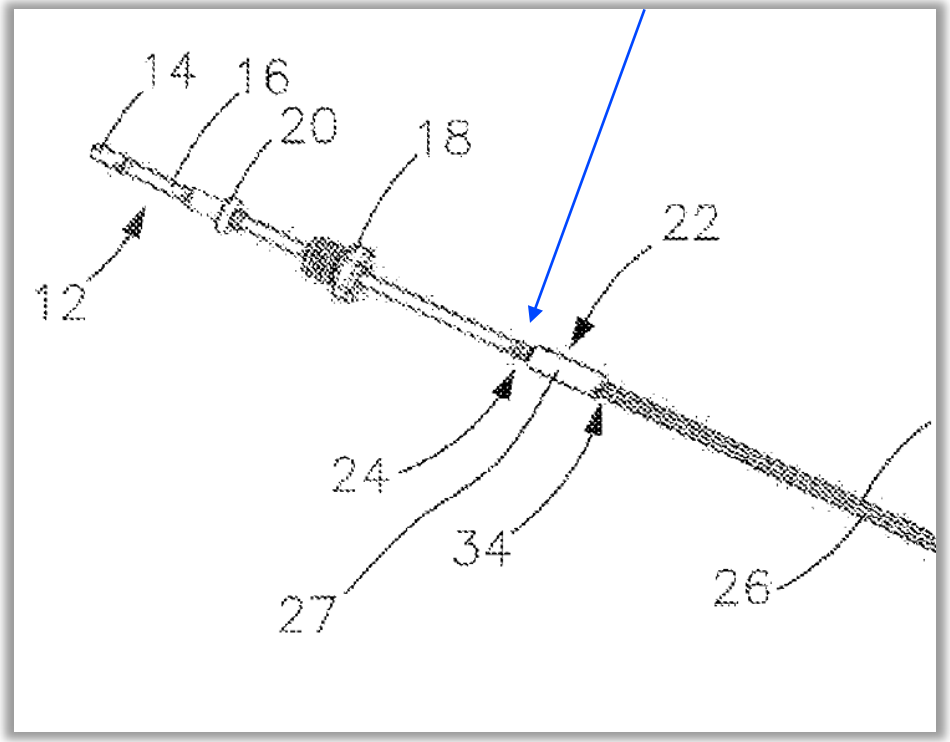

Subject Matter Ineligibility

’673 Claims 23–43 are directed to an abstract idea under *Alice* step 1.

Limitation	Claim Language	*Alice* Step 1
23(pre)	A method of monitoring a temperature and condition of a desired part of a railcar, comprising:	**Abstract concept**
23(a)	(a) sensing the temperature of a part of the railcar other than the desired part by use of a temperature sensor in thermal communication with said other part;	**Generic, conventional components**
23(b)	(b) determining the temperature of the desired part by use of the temperature of the part sensed in step (a) and calibrated correlations between a plurality of temperature values for the desired part and a plurality of temperatures that are expected for the part during standard operations of the railcar;	**Abstract concept**
23(c)	(c) determining if said temperature of the desired part is outside an acceptable range of temperatures indicating operating conditions expected for the desired part during the operation of the railcar by comparing the temperature of the desired part determined in step (b) and at least one defined temperature value associated with the desired part, wherein an acceptable range of temperatures is a defined range of temperatures expected during normal operation of the railcar; and	**Abstract concept**
23(d)	(d) transmitting an alarm if in step (c) it is determined that the temperature of the desired part is outside ~~an~~ the acceptable range of temperatures and transmitting an alarm if in step (c) it is determined that the temperature of the desired part is outside the acceptable range of temperatures and is within one of a plurality of severity levels defined by a deviation of said temperature from a predetermined reference temperature value, wherein said deviation indicates a severity of a detected condition of the desired part, wherein said alarm condition defines one or more recommended actions to be taken with regard to the detected condition of the desired part.	**Abstract concept**

’673 Claims 23–43 are directed to an abstract idea under *Alice* step 1.

- Claim 23 does not limit or specify
  - which “operational characteristic” is measured, or
  - how the “heuristic” goes about correlating collected data to the condition of the bearing, or
  - which “possible values” should be used to define the severity levels, or
  - what “recommended actions” should be taken in response.
- The other substitute claims are equally abstract.

Alice Step 2: Claims 23–43 recite conventional physical elements used in a conventional way.

- For example, the only physical elements recited in claim 23 are
  1. a desired part of a railcar;
  2. a part of the railcar other than the desired part; and
  3. a temperature sensor in thermal communication with said other part.
- All of these are conventional, and none of them distinguish the prior art.

Additional Information

Definition of a PHOSITA (Petitioner)

Petitioner's Expert ('223 EX1003, ¶ 45) defined a PHOSITA:

45. In my opinion, and applying the factors set forth above in paragraph 43 above, a person of ordinary skill in the art at the time of the filing of the '223 patent would be a person with at least a B.S. degree in electrical or mechanical engineering or a related field with at least two years' experience designing monitoring systems for railcar components, rotating equipment, or equivalent industrial equipment. It is my opinion that less work experience could be compensated by a higher level of education, such as a master's degree, and vice versa.

Definition of a PHOSITA (Patent Owner)

Patent Owner's Expert ('223 EX2001, ¶ 46) defined a PHOSITA:

> 46. In my opinion, a POSITA would be a person with at least a B.S. degree in electrical engineering or computer science or a related field, with at least two years' experience with sensing systems for railcars or similar industrial equipment, including familiarity with wireless networks and heuristics and statistical data analysis for failure prediction. Less work experience could be compensated for by a higher level of relevant education, and vice versa.

Secondary Considerations

- Amsted's alleged evidence of industry praise is a single internal email from an executive at Amsted, sent to other Amsted employees.
  - It does not indicate that the invention received praise from the industry (i.e., anyone outside the company).
  - It does not tie any such praise to specific, claimed features of the system.
- Amsted's infringement allegations were directed to an improper amalgamation of research and development prototypes, and Hum denied infringement in any event.
  - '673 Paper 23 at 25–26.

Independent Claims

’223 Patent, Claim 1

Claim	Language
1(pre)	A sensor device for monitoring temperature on a railcar, comprising:
1(a)	a housing mountable on a railcar;
1(b)	a temperature sensor;
1(c)	electrical circuitry in communication with said temperature sensor for obtaining information regarding the temperature being sensed, said electrical circuitry positioned within said housing;
1(d)	a power source electrically connected to said electrical circuitry for providing power thereto, said power source positioned within said housing;

Claim	Language
1(e)	a probe external to said housing and which probe includes said temperature sensor and a magnet positioned to magnetically attract the part of the railcar against which the probe will be placed; and
1(f)	a communication device capable of broadcasting information regarding the temperature sensed, said communication device positioned within said housing;
1(g)	wherein the power consumption of said sensor device is managed by placing said sensor device in a standby state and periodically awakening said sensor device to collect readings from said temperature sensor and to transmit the information regarding the temperature sensed via said communication circuitry.

’223 Patent, Claim 2

Claim	Language
2(pre)	A system for monitoring a railcar, comprising:
2(a)	a plurality of sensor devices located on the railcar for monitoring parameters or conditions of the railcar, each of said sensor devices being separate from one another and including a sensor for monitoring one of said parameters or conditions of the railcar;
2(b)	said plurality of sensor devices including at least one temperature sensor device having:
2(c)	a housing;
2(d)	a temperature sensor in thermal communication with an item of the railcar for which the temperature is being monitored, which item is external to said housing;
2(e)	electrical circuitry in communication with said temperature sensor for obtaining information regarding the temperature being sensed, said electrical circuitry positioned within said housing;

Claim	Language
2(f)	a power source electrically connected to said electrical circuitry for providing power thereto, said power source positioned within said housing;
2(g)	a communication device capable of broadcasting information regarding the temperature sensed via wireless communication, said communication device positioned within said housing; and
2(h)	a communication management unit, mounted on the railcar, capable of two way wireless communication with each of said plurality of sensor devices for receiving information therefrom, said communication management unit having a wireless communication device for broadcasting information about the parameter or condition being monitored.

’223 Patent, Claim 5

Claim	Language
5(pre)	A system for monitoring the operation of a railcar comprising:
5(a)	a. one or more sensor units mounted on said railcar, each of said sensor units monitoring an operating parameter of said railcar wherein each of said sensor units comprises
5(b)	a sensor,
5(c)	a power source,
5(d)	a processor,
5(e)	memory,
5(f)	communication circuitry,
5(g)	and software, stored in said memory and executed by said processor, said software performing the functions of collecting data from said sensor at periodic intervals,

Claim	Language
5(h)	b. a communication management unit, mounted on said railcar, said communication management unit in wireless communication with said one or more sensor units;
5(i)	wherein said communication management unit applies heuristics to analyze data collected from said one or more sensor units
5(j)	(a) to determine if an actual failure exists and
5(k)	(b) to predict potential or imminent failures based on a statistical analysis of said collected data.

’223 Patent, Claim 23

Claim	Language
23(pre)	A monitoring device for monitoring temperature on a railcar, comprising:
23(a)	a housing mountable on a railcar;
23(b)	a temperature sensor configured to be in thermal communication with a portion of the railcar to be monitored for temperature, which portion is external to said housing;
23(c)	electrical circuitry in communication with said temperature sensor for obtaining information regarding the temperature being sensed, said electrical circuitry positioned within said housing;

Claim	Language
23(d)	a power source electrically connected to said electrical circuitry for providing power thereto, said power source positioned within said housing; and
23(e)	a communication device capable broadcasting information regarding the temperature sensed, said communication device positioned within said housing;
23(f)	wherein the power consumption of said monitoring device is managed by placing said monitoring device in a standby state and periodically awakening said monitoring device to collect readings from said temperature sensor and to transmit the information regarding the temperature sensed via said communication circuitry.

’223 Patent, Substitute Claim 33

Claim	Language
33(pre)	A sensor device for monitoring temperature on a railcar, comprising:
33(a)	a housing providing a first piece mountable on a railcar;
33(b)	a temperature sensor;
33(c)	electrical circuitry in communication with said temperature sensor via a cable for obtaining information regarding the temperature being sensed, wherein said electrical circuitry is positioned within said housing, and said cable has a proximal end disposed in the housing and a distal end residing external to said housing;
33(d)	a power source electrically connected to said electrical circuitry to[[for]] provide[[ing]] power thereto, said power source positioned within said housing;

Claim	Language
33(d)	a probe providing a second piece external to and separated from the first piece provided by said housing, said second piece ~~and which probe~~ comprising a sensor probe head that (i) is spaced apart from the housing, (ii) has a body formed of a heat conductive material, (iii) has a connector electrically interfaced with said temperature sensor and configured to connect to a corresponding electrical connector at the distal end of the cable and includes said temperature sensor, and (iv) has a magnet positioned in the body adjacent to a portion of the connector extending inside the body, the magnet configured to magnetically attract the part of the railcar against which the sensor probe head will be placed; and
33(e)	a communication device configured to ~~capable of~~ broadcast[[ing]] information regarding the temperature sensed, said communication device positioned within said housing;
33(f)	wherein the power consumption of said sensor device is managed by placing said sensor device in a standby state and periodically awakening said sensor device to collect readings from said temperature sensor and to transmit the information regarding the temperature sensed via said communication device ~~circuitry~~.

’223 Patent, Substitute Claim 34

Claim	Language
34(pre)	A system for monitoring a railcar, comprising:
34(a)	a plurality of sensor devices each located on and mounted to a sidewall of a bearing adapter of the railcar for monitoring parameters or conditions of a bearing of the railcar, each of said sensor devices being separate from one another and including a sensor for monitoring one of said parameters or conditions of the bearing of the railcar;
34(b)	said plurality of sensor devices including at least one temperature sensor device having:
34(c)	a housing comprising a non-flexible material that is resistant to environmental damage;
34(d)	a temperature sensor in thermal communication with an item consisting of the bearing adapter of the railcar for which the temperature is being monitored, which item is external to said housing;
34(e)	electrical circuitry in communication with said temperature sensor for obtaining information regarding the temperature being ~~sensed~~ monitored, said electrical circuitry positioned within said housing;
34(f)	a power source electrically connected to said electrical circuitry for providing power thereto, said power source positioned within said housing;

Claim	Language
34(g)	a communication device capable of broadcasting information regarding the temperature being monitored ~~sensed~~ via wireless communication, said communication device positioned within said housing, wherein said information regarding the temperature being monitored comprises data representing a condition of a bearing; and
34(h)	a communication management unit, mounted on the railcar, capable of two way wireless communication with each of said plurality of sensor devices for receiving information therefrom, said communication management unit having a wireless communication device for broadcasting information about the parameter or condition being monitored to a land-based remote station,
34(i)	wherein at least one of the communication management unit or the remote station is configured to (i) correlate one or more numeric values derived from the data to the condition of the bearing, (ii) determine a severity of a condition of the bearing, and (iii) determine an alarm condition based on the severity of the condition of the bearing, wherein said alarm condition comprises one or more recommended actions to be taken with respect to the bearing.

’223 Patent, Substitute Claim 42

Claim	Language
42(pre)	A system for monitoring the operation of a railcar comprising:
42(a)	a. one or more sensor units mounted to a sidewall of a bearing adapter on said railcar, each of said sensor units monitoring an operating parameter of said railcar wherein each of said sensor units comprises
42(b)	a sensor,
42(c)	a power source,
42(d)	a processor,
42(e)	memory,
42(f)	communications circuitry, and
42(g)	software, stored in said memory and executed by said processor, said software performing the functions of collecting data from said sensor at periodic intervals and calculating one or more numeric values based on the collected data, wherein the one or more numeric values represent a condition of a bearing; and

Claim	Language
42(h)	b. a communication management unit, mounted on said railcar, said communication management unit in wireless communication with said one or more sensor units;
42(i)	wherein said communication management unit applies heuristics to analyze data collected from said one or more sensor units
42(j)	(a) to determine if an actual failure exists and
42(k)	(b) to predict potential or imminent failures based on a statistical analysis of said collected data by correlating one or more numeric values derived from the data to the condition of the bearing and determining a severity of the condition of the bearing;
42(l)	c. a land-based remote base unit, in wireless communication with said communication management unit, configured to: (i) receive data from said communication management unit; (ii) determine a severity of the condition of the bearing based on the data received from the communication management unit; (iii) determine an alarm condition based on the severity of the condition of the bearing, wherein said alarm condition comprises a recommended action with respect to the bearing.

’223 Patent, Substitute Claim 59

Claim	Language
59(pre)	A monitoring device for monitoring temperature on a railcar, comprising:
59(a)	a housing mountable on a railcar;
59(b)	a temperature sensor configured to be in thermal communication with a portion of the railcar to be monitored for temperature, which portion is external to said housing, the temperature sensor positioned within a probe head and interfaced with an electrical connector, the probe head configured to receive a cable having a corresponding electrical connector;
59(c)	electrical circuitry in communication with said temperature sensor via the cable for obtaining information regarding the temperature being sensed, said electrical circuitry positioned within said housing, said electrical circuitry positioned within said housing, said cable having a proximal end disposed in the housing and a distal end residing external to said housing;

Claim	Language
59(d)	a power source electrically connected to said electrical circuitry for providing power thereto, said power source positioned within said housing; and
59(e)	a communication device capable broadcasting information regarding the temperature sensed, said communication device positioned within said housing;
59(f)	wherein the power consumption of said monitoring device is managed by placing said monitoring device in a standby state and periodically awakening said monitoring device to collect readings from said temperature sensor and to transmit the information regarding the temperature sensed via said communication circuitry.

’673 Patent, Claim 1

Claim	Language
1(pre)	A method of monitoring operational characteristics of a railcar comprising the steps of:
1(a)	a. receiving data or processed information regarding said operational characteristic from one or more sensing units on said railcar, said sensing units monitoring an operational characteristic of said railcar;
1(b)	b. applying a heuristic to said received data to determine deviations from nominal operating conditions;
1(c)	c. assigning a severity level to said deviations from nominal operating conditions; and
1(d)	d. determining an alarm condition based on said assigned severity level.

’673 Patent, Claim 10

Claim	Language
10(pre)	A method of monitoring a temperature of a desired part of a railcar, comprising:
10(a)	(a) sensing the temperature of a part of the railcar other than the desired part by use of a temperature sensor in thermal communication with said other part;
10(b)	(b) determining the temperature of the desired part by use of the temperature sensed in step (a);
10(c)	(c) determining if said temperature of the desired part is outside an acceptable range of temperatures; and
10(d)	(d) transmitting an alarm if in step (c) it is determined that the temperature of the desired part is outside an acceptable range.

’673 Patent, Claim 14

Claim	Language
14(pre)	A method for monitoring the operation of a railcar performed by a communication management unit disposed on said railcar comprising the steps of:
14(a)	a. wirelessly receiving data from one or more sensing units which periodically collect readings from one or more sensors disposed on said railcar;
14(b)	b. heuristically analyzing said received data to determine if an actual failure exists on said railcar or to predict potential or imminent failures based on a statistical analysis of said received data; and
14(c)	c. communicating the results of said analysis to an off-railcar location.

’673 Patent, Claim 21

Claim	Language
21(pre)	A method for monitoring the operation of a railcar comprising:
21(a)	a. collecting data at periodic intervals about one or more operating parameters of said railcar using one or more sensor units provided on said railcar;
21(b)	b. communicating said collected data to a communication management unit;
21(c)	c. analyzing said collected data by applying heuristics thereto to (i) determine if an actual failure exists and (ii) to predict potential or imminent failures based on a statistical analysis of said collected data.

’673 Patent, Substitute Claim 23

Claim	Language
23(pre)	A method of monitoring operational characteristics of a railcar comprising the steps of:
23(a)	a. receiving data or processed information regarding ~~said~~ an operational characteristic of a railcar from one or more sensing units, each mounted on a sidewall of a bearing adapter on said railcar, said sensing units monitoring ~~an~~ said operational characteristic of said railcar, wherein the operational characteristic is a condition of a bearing proximate to the bearing adapter;
23(b)	b. determining the condition of the bearing by applying a heuristic to said received data to determine deviations from nominal operating conditions, wherein the heuristic correlates one or more numeric values derived from the data or processed information to the condition of the bearing;
23(c)	c. assigning a severity level to said deviations from nominal operating conditions, wherein said severity level is one of a plurality of defined severity levels that are each assignable based on respective possible values for a magnitude of the deviations of one or more numeric values from nominal operating conditions for the bearing during operation of the railcar; and
23(d)	d. determining an alarm condition based on said assigned severity level, wherein said alarm condition defines one or more recommended actions to be taken with regard to the detected deviation from nominal operating conditions.

’673 Patent, Substitute Claim 33

Claim	Language
33(pre)	A method of monitoring a temperature and condition of a desired part of a railcar, comprising:
33(a)	(a) sensing the temperature of a part of the railcar other than the desired part by use of a temperature sensor in thermal communication with said other part;
33(b)	(b) determining the temperature of the desired part by use of the temperature of the part sensed in step (a) and calibrated correlations between a plurality of temperature values for the desired part and a plurality of temperatures that are expected for the part during standard operations of the railcar;
33(c)	(c) determining if said temperature of the desired part is outside an acceptable range of temperatures indicating operating conditions expected for the desired part during the operation of the railcar by comparing the temperature of the desired part determined in step (b) and at least one defined temperature value associated with the desired part, wherein an acceptable range of temperatures is a defined range of temperatures expected during normal operation of the railcar; and
33(d)	(d) transmitting an alarm if in step (c) it is determined that the temperature of the desired part is outside ~~an~~ the acceptable range of temperatures and transmitting an alarm if in step (c) it is determined that the temperature of the desired part is outside the acceptable range of temperatures and is within one of a plurality of severity levels defined by a deviation of said temperature from a predetermined reference temperature value, wherein said deviation indicates a severity of a detected condition of the desired part, wherein said alarm condition defines one or more recommended actions to be taken with regard to the detected condition of the desired part.

’673 Patent, Substitute Claim 36

Claim	Language
36(pre)	A method for monitoring the operation of a railcar performed by a communication management unit disposed on said railcar comprising the steps of:
36(a)	a. wirelessly receiving data from one or more sensing units which periodically collect readings from one or more sensors disposed on a sidewall of a bearing adapter on said railcar;
36(b)	b. heuristically analyzing said received data to: (i) determine a condition of a bearing proximate to the bearing adapter based on correlations between the data and a plurality of possible values indicative of the condition of the bearing; and (ii) determine if an actual failure exists on said railcar or ~~to~~ predict potential or imminent failures based on a statistical analysis of said received data; and (iii) assign a severity level to said determined actual failure or said predicted potential or imminent failures, wherein the severity level is based on deviations of the condition of the bearing from an expected condition of the bearing; and
36(c)	c. determine an alarm condition based on data collected by the one or more sensing units, wherein said alarm condition defines a specific action to be taken with regard to the bearing based on said assigned severity level;

’673 Patent, Substitute Claim 42

Claim	Language
42(pre)	A method for monitoring the operation of a railcar comprising:
42(a)	a. collecting data at periodic intervals about one or more operating parameters of said railcar using one or more sensor units provided on a sidewall of a bearing adapter on said railcar, wherein the one or more operating parameters comprise a condition of a bearing proximate to the bearing adapter;
42(b)	b. communicating said collected data to a communication management unit;
42(c)	c. analyzing said collected data by applying heuristics thereto to (i) determine if an actual failure exists and (ii) ~~to~~ predict potential or imminent failures based on a statistical analysis of said collected data, wherein application of the heuristics correlates the data to the condition of the bearing;
42(d)	d. assigning a severity level to the condition of the bearing, wherein said severity level is one of three or more defined severity levels based on the one or more numeric values; and
42(e)	e. determining an alarm condition, wherein said alarm condition defines a specific action to be taken with regard to the bearing based on said assigned severity level.