Trials@uspto.gov
571-272-7822

Paper 58
Entered: July 18, 2024

UNITED STATES PATENT AND TRADEMARK OFFICE

BEFORE THE PATENT TRIAL AND APPEAL BOARD

HUM INDUSTRIAL TECHNOLOGY, INC.,
Petitioner,

v.

AMSTED RAIL COMPANY, INC.,
Patent Owner.

IPR2023-00539
Patent 9,981,673 B2

Before JAMES P. CALVE, KEVIN W. CHERRY, and MICHAEL L. WOODS, *Administrative Patent Judges.*

CALVE, *Administrative Patent Judge*.

JUDGMENT
Final Written Decision
Determining All Challenged Claims Unpatentable
Denying Patent Owner's Revised Motion to Amend
35 U.S.C. § 318(a)

Dismissing Petitioner's Motion to Exclude
37 C.F.R. § 42.5

Dismissing Patent Owner's Motion to Exclude
37 C.F.R. § 42.5

I. BACKGROUND

Hum Industrial Technology, Inc. ("Petitioner") filed a petition requesting *inter partes* review of claims 1–18 and 20–22 (the "challenged claims") of U.S. Patent No. 9,981,673 B2 ("the '673 patent") (Ex. 1001). Paper 1, 5 ("Pet."). Amsted Rail Company, Inc. ("Patent Owner") timely filed a Preliminary Response. Paper 6 ("Prelim. Resp."). Applying the standard set forth in 35 U.S.C. § 314(a) for instituting *inter partes* review, we instituted an *inter partes* review of all challenged claims on all of the grounds asserted in the Petition. Paper 10 ("Decision").

After we instituted trial, Patent Owner filed a Patent Owner Response. Paper 16. Patent Owner subsequently filed a corrected Patent Owner's Response. Paper 21 ("PO Resp.").[1] Petitioner thereafter filed a Reply to Patent Owner's Response. Specifically, Petitioner filed an unredacted Reply to Patent Owner's Response (Paper 23) and a redacted Reply to Patent Owner's Response (Paper 24). Petitioner subsequently filed a Corrected Reply to Patent Owner's Response. Ex. 1033 ("Reply").[2] Patent Owner filed a Sur-reply to Petitioner's Reply. Paper 33 ("Sur-reply").

---

[1] All references to "Patent Owner's Response" or "PO Resp." refer to Patent Owner's Corrected Response that was filed as Paper 21 to correct citations to the Declaration of Andrew Martin (Exhibit 2013).

[2] All references to "Petitioner's Reply to Patent Owner's Response" or "Reply" refer to Petitioner's Corrected Reply to Patent Owner's Response, which is the redacted version of Petitioner's Reply to Patent Owner's Response. This version of Petitioner's Reply to Patent Owner's Response was filed as Exhibit 1033 to correct citations to Mr. Ricca's Declaration in Support of Petitioner's Reply, which was filed as Exhibit 1030.

Patent Owner also filed a Motion to Amend claims 1–18 and 20–22 contingent upon a finding of unpatentability. Paper 17 ("Motion to Amend" or "MTA") 1. In its Motion to Amend, Patent Owner requested Preliminary Guidance. *Id.* Petitioner filed an Opposition to Patent Owner's Motion to Amend. Paper 25 ("Opp. MTA"). We provided Preliminary Guidance. Paper 29 ("PG").

Patent Owner thereafter filed a Revised Motion to Amend claims 1–18 and 20–22 contingent upon a finding of unpatentability of any of those claims. Paper 32 ("Revised Motion to Amend" or "RMTA") 1. Petitioner filed an Opposition to Patent Owner's Revised Motion to Amend. Paper 37 ("Opp. RMTA") 1. Patent Owner filed a Reply in support of its Revised Motion to Amend. Paper 42 ("Reply RMTA"). Petitioner filed a Sur-reply to Patent Owner's Revised Motion to Amend. Paper 49 ("Sur-reply RMTA").

Patent Owner filed a Motion to Exclude Exhibits 1028 and 1031 that are cited in Petitioner's Reply (Paper 23). Paper 43 ("PO Mot. Exclude"). Petitioner filed an Opposition to Patent Owner's Motion to Exclude. Paper 45 ("Opp. PO Mot. Exclude"). Patent Owner filed a Reply in Support of its Motion to Exclude. Paper 48 ("PO Reply Mot. Exclude").

Petitioner filed a Motion to Exclude Exhibits 2011, 2012, and 2157 that are cited in Patent Owner's Response (Paper 21). Paper 44 ("Pet. Mot. Exclude"). Patent Owner filed an Opposition to Petitioner's Motion to Exclude. Paper 47. ("PO Opp. Pet. Mot. Exclude"). Petitioner filed a Reply in Support of its Motion to Exclude. Paper 50 ("Pet. Reply Mot. Exclude").

An oral hearing was held on June 10, 2024. A copy of the transcript was entered in the record. Paper 57 ("Tr.").

We have jurisdiction pursuant to 35 U.S.C. § 6. This Decision is a Final Written Decision under 35 U.S.C. § 318(a) and 37 C.F.R. § 42.73 as to the patentability of the claims on which we instituted trial. Petitioner bears the burden of proving unpatentability of the challenged claims. *Dynamic Drinkware, LLC v. Nat'l Graphics, Inc.*, 800 F.3d 1375, 1378 (Fed. Cir. 2015). To prevail, Petitioner must prove unpatentability by a preponderance of the evidence. *See* 35 U.S.C. § 316(e); 37 C.F.R. § 42.1(d).

For reasons that follow, we determine that Petitioner has shown by a preponderance of the evidence that claims 1–18 and 20–22 of the '673 patent are unpatentable. We also determine that Petitioner has shown by a preponderance of the evidence that proposed substitute claims 23–43 are not eligible for patenting under 35 U.S.C. § 101, that they lack a written description as required by 35 U.S.C. § 112, first paragraph, and that they are unpatentable under 35 U.S.C. § 103(a).

We dismiss Petitioner's motion to exclude evidence as moot.

We dismiss Patent Owner's motion to exclude evidence as moot.

A. Related Proceedings

The parties identify the following district court litigation involving the '673 patent: *Amsted Rail Company, Inc. v. Hum Industrial Technology, Inc.*, No. 4:22-cv-00445-AGF (E.D. Mo.). Pet. 2; Paper 5 (Patent Owner's Mandatory Notices), 1. Petitioner represents it has requested *inter partes* reviews of other patents that are owned by Patent Owner and asserted in the district court litigation identified above in the following proceedings:

(1) *Hum Industrial Tech., Inc. v. Amsted Rail Co., Inc.*, IPR2023-00538, challenging claims of U.S. Patent No. 9,365,223 B2; and

(2) *Hum Industrial Tech., Inc. v. Amsted Rail Co., Inc.*, IPR2023-00540, challenging claims of U.S. Patent No. 10,137,915 B2.

Paper 5, 2; *see* Pet. 2.

B. Real Parties in Interest

Petitioner identifies Hum Industrial Technology, Inc. and Dr. Brent Wilson, an employee of Hum Industrial Technology and named defendant in the district court litigation identified above, as real parties-in-interest. Pet. 1.

Patent Owner identifies Amsted Rail Company, Inc. as the real party-in-interest in this proceeding. Paper 5, 1. Patent Owner identifies Amsted Digital Solutions, Inc. and IONX LLC as the real parties-in-interest who are not parties to these proceedings or the district court litigation. *Id.*

C. The '673 Patent

The '673 patent attaches sensors to railcars to monitor components, detect deviations or trends from nominal operating parameters, and warn of actual or impending failures. Ex. 1001, 1:15–22, 2:3–33. Communication management units (CMUs) collect data wirelessly from sensors and analyze it using heuristics and statistical models to generate results that are sent to a locomotive or station remote from the railcar. *Id.* at 2:61–3:20, 8:13–11:58.

Sensor motes 10 are configured "dependent upon the type of sensor and the type of data desired." Ex. 1001, 4:49–51. They can be temperature sensors, pressure sensors, load cells, strain gauges, hall effect sensors, vibration sensors, accelerometers, gyroscopes, displacement sensors, inductive sensors, piezo resistive microphones, and ultrasonic sensors. We reproduce Figures, 3A, 4, and 5B of the '673 patent below to illustrate the different placement sites for temperature sensor motes 10 on railcars.

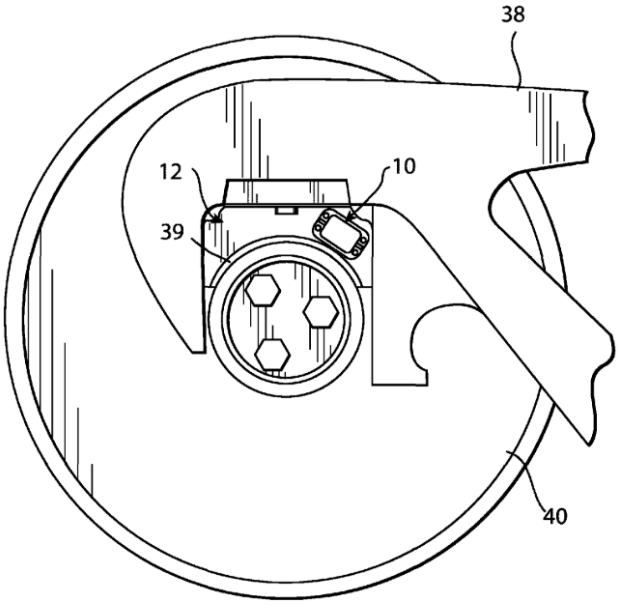

FIG.3A

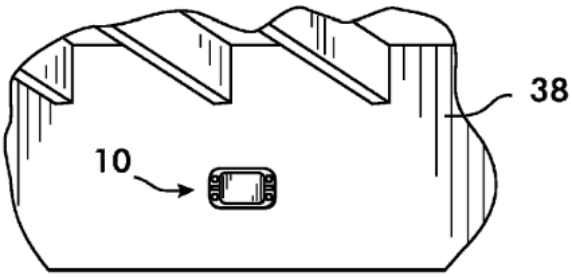

FIG.4

FIG.5B

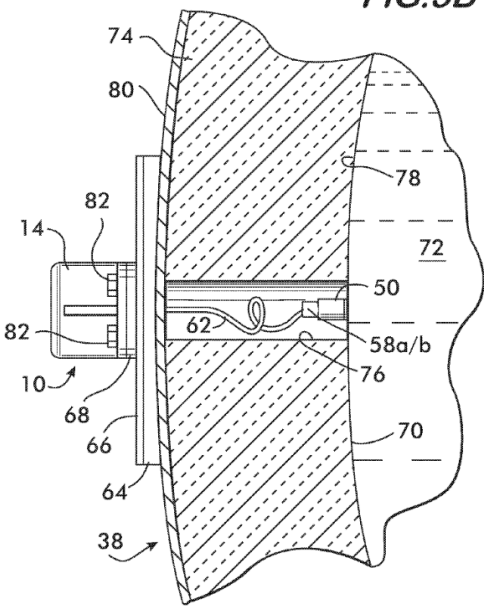

In Figure 3A, temperature sensing mote 10 is mounted to bearing adapter 12 to monitor the temperature of railcar wheel bearing 39. In Figure 4, mote 10 is mounted to railcar body 38 to monitor ambient temperature. In Figure 5B, mote 10 is mounted to rail tank car 38 to monitor a temperature of liquid 72 stored in a tank (vessel 70) of rail tank car 38. Ex. 1001, 5:43–57, 6:55–61.

Motes 10 include long-term power source 34 and power management circuitry to conserve battery life by staying in a standby state and waking periodically to deliver readings from sensor 20. Ex. 1001, 5:36–42.

The CMU can generate alarms based on trending conditions, bearing temperatures relative to temperatures of other bearings or relative to ambient temperatures, bearing temperatures above a predetermined temperature, and bearing temperatures that deviate from average bearing temperatures of a wagon or fleet or from a predetermined temperature. Ex. 1001, 13:8–15:45.

To provide this functionality, CMU 32 performs data analysis using data collected from multiple sensor motes 10 by applying heuristics to draw conclusions. Ex. 1001, 8:14–19. The ’673 patent describes heuristics that correlate a bearing cup temperature to a bearing adapter temperature, convert bolster/side frame displacement to load, determine coupler force by applying a Fast Fourier Transfer (FFT) on sampled data and performing various mathematical operations, plotting a FFT over time to identify amplification, converting radial acceleration to vehicle speed, computing kurtosis and a probability density function, converting measured temperature to pressure, correlating coupler displacement to force, using an algorithm and FFT to isolate known hunting frequencies, and correlating wheel temperature to tread temperature. *Id.* at col. 8 to col. 12.

When an alert is detected, it is sent to a display unit in locomotive 46 or to land-based base station 44. Ex. 1001, 11:59–61. Each type of alert is accompanied by a recommended practice that the locomotive driver should take when the alert appears and the required action is based on the severity of the alert. *Id.* at 12:40–46. Motes transfer data to CMU 32 directly or via an ad-hoc mesh network formed by other motes on a railcar. *Id.* at 5:28–35.

Alarms are issued by severity level for different faults. Ex. 1001, 13:30–14:3. A Bearing Temp Alarm issues for trending recommendations and repeat offenders. *Id.* at 13:33–36. An Axle Differential Alarm occurs when a bearing's temperature is hotter than its axle mate by a predetermined amount, and the train stops to check a bearing journal. *Id.* at 13:37–43. An Above Ambient Alarm issues when a bearing is a predetermined amount above ambient, and the train stops to check a bearing journal. *Id.* at 13:49–67. A Critical Alarm issues for bearing temperatures above a predetermined temperature, and the train stops to remove a bearing. *Id.* at 14:1–3.

D. Challenged Claims

Petitioner challenges the patentability of claims 1–18 and 20–22 of the '673 patent. Pet. 5. Claims 1, 10, 14, and 21 are independent. Claims 2–9 and 13 depend from claim 1. Claims 11 and 12 depend from claim 10. Claims 15–18 and 20 depend from claim 14. Claim 22 depends from claim 21. Ex. 1001, 15:62–18:27. Claim 1 is reproduced below with Petitioner's annotations identifying each limitation. Ex. 1001, 15:62–16:6; *see* Pet. ix.

1. *Preamble* A method of monitoring operational characteristics of a railcar comprising the steps of:
   - *1(a)* a. receiving data or processed information regarding said operational characteristic from one or more sensing units on said railcar, said sensing units monitoring an operational characteristic of said railcar;
   - *1(b)* b. applying a heuristic to said received data to determine deviations from nominal operating conditions;
   - *1(c)* c. assigning a severity level to said deviations from nominal operating conditions; and
   - *1(d)* d. determining an alarm condition based on said assigned severity level.

E. Asserted Grounds of Unpatentability

Petitioner asserts the following grounds of unpatentability (Pet. 6):

Ground	Challenged Claim(s)	35 U.S.C. §	Reference(s)
1	1–7, 10–18, 20–22	103(a)[3]	LeFebvre[4]
2	8, 9	103(a)	LeFebvre, Barone[5]
3	1, 2, 4, 6–11, 13	103(a)	Armitage[6]
4	3, 5, 12–18, 20–22	103(a)	Armitage, LeFebvre

Petitioner relies on Declarations of Steven Ricca. Exs. 1003, 1030. Patent Owner relies on Declarations of Michael I. Shamos. Exs. 2001, 2010.

II. DISCUSSION

A. Level of Ordinary Skill in the Art

Petitioner asserts that a person of ordinary skill in the art would have "at least a B.S. degree in electrical or mechanical engineering or a related field with at least two years' experience designing monitoring systems for railcar components, or monitoring systems for similar industrial equipment with rotating components," and "[l]ess work experience could be compensated by a higher level of education, such as a master's degree, and vice versa." Pet. 14 (citing Ex. 1003 ¶ 45).

---

[3] The Leahy-Smith America Invents Act ("AIA") revised 35 U.S.C. § 103 effective on March 16, 2013. Because the '673 patent has an effective filing date before March 16, 2013, we refer to the pre-AIA version of § 103.

[4] US 2007/0152107 A1, published July 5, 2007 (Ex. 1005, "LeFebvre").

[5] US 2007/0208841 A1, published Sept. 6, 2007 (Ex. 1007, "Barone").

[6] US 2011/028540 A1, published Nov. 17, 2011 (Ex. 1006, "Armitage").

Patent Owner contends that a skilled artisan would have "at least a B.S. degree in electrical or computer science or a related field, with at least two years' experience with sensing systems for railcars or similar industrial equipment, including familiarity with wireless networks and heuristics and statistical data analysis for failure prediction," and "[l]ess work experience could be compensated for by a higher level of relevant education, and vice versa." PO Resp. 3 (citing Ex. 2001 ¶¶ 36–40; Ex. 2010 ¶ 13).

We adopt Patent Owner's proposed level as it is more consistent with the '673 patent and prior art, but our analysis would be the same under either party's proposal.

B. Claim Interpretation

We interpret claims "using the same claim construction standard that would be used to construe the claims in a civil action held under 35 U.S.C. 282(b)." 37 C.F.R. § 42.100(b). Under this standard, words of a claim are generally given their ordinary and customary meaning as understood by a person of ordinary skill in the art at the time of the invention. *Phillips v. AWH Corp.*, 415 F.3d 1303, 1312 (Fed. Cir. 2005) (en banc). We construe the claims only to the extent necessary to reach our decision. *See Nidec Motor Corp. v. Zhongshan Broad Ocean Motor Co.*, 868 F.3d 1013, 1017 (Fed. Cir. 2017) ("[W]e need only construe terms 'that are in controversy, and only to the extent necessary to resolve the controversy.'") (quoting *Vivid Techs., Inc. v. Am. Sci. & Eng'g, Inc.*, 200 F.3d 795, 803 (Fed. Cir. 1999)).

Petitioner asserts that the claims should be given their plain and ordinary meaning. Pet. 15. Patent Owner proposes constructions for "a heuristic" and "heuristically analyzing," "nominal operating conditions," and "severity level." Prelim. Resp. 10–12. We construe these terms below.

1. "heuristic" and "heuristically analyzing"

We preliminarily interpreted "heuristic" and "heuristically analyzing" to mean "a rule, algorithm, function, formula, graphing function, or similar mechanism applied to data to assist in analyzing and/or interpreting the data." Decision 8. Neither party disputes this construction. Reply 1; PO Resp. 4. Therefore, we use this interpretation.

2. "nominal operating conditions"

We preliminarily interpreted "nominal operating conditions" to mean "normative or expected conditions based on trends, conditions or other components, ambient conditions, and predetermined values." Decision 8.

Patent Owner argues that "nominal operating conditions" should mean "expected conditions based on at least one of trends, conditions of other components, ambient conditions, and predetermined values." PO Resp. 4–5. Patent Owner asserts that "the inclusion of the word 'normative' finds no support in the specification and neither Petitioner nor the Board provides citation to any evidence of record to support its inclusion." *Id.* at 4. Patent Owner also argues that "the Board's construction is unnecessarily limiting in that it requires expected conditions to be based on all the recited inputs, namely 'trends, conditions of other components, ambient conditions, and predetermined values.'" *Id.* (citing Ex. 2010 ¶ 29).

Petitioner argues that our construction is supported by the '673 patent specification, which "discloses a 'Critical Alarm . . . set at a predetermined bearing temperature.' [and] [t]he 'predetermined bearing temperature' is a *normative* limit, corresponding to the maximum permissible operating temperature of the bearing." Reply 1; *id.* at 1–2 ("The Board's construction encompasses this embodiment." Amsted's construction excludes it.).

We modify our interpretation of "nominal operating conditions" to be based on *any of* trends, conditions or other components, ambient conditions, and predetermined values as Patent Owner asserts. We agree with Petitioner that "nominal operating conditions" include "normative" conditions that prescribe operational norms or limits of railroad equipment.

Claims 1 and 8 recite applying a heuristic to said received data to determine deviations from nominal operating conditions and assigning a severity level to said deviations from nominal operating conditions. Ex. 1001, 16:1–4, 16:24–27. The '673 patent explains that "it is desirable to detect and report deviations from *operational norms* or predictions of impending failure . . . allowing for timely human intervention" because "mechanical failures could lead very quickly to catastrophic failure, not only of a single railcar, but of the entire train." *Id.* at 1:42–48 (emphasis added).

The '673 patent describes operational norms that are monitored to detect deviations from predetermined, desired, and/or expected norms. For example, speed restrictions may be imposed on train operations. Ex. 1001, 12:56–61. Differential conditions measure whether operational conditions across any axle differ by more than a specified variable, i.e., they exceed operational norms. *Id.* at 13:7–14. An Above Ambient Condition measures whether the temperature of any bearing exceeds a value reported from the Ambient Temperature Node by a specific constant, i.e., it exceeds a prescribed operational norm. *Id.* at 13:15–17. A Node Temp Anomaly occurs when a data channel, bearing, or ambient does not report valid temperatures, i.e., reported temperatures fall outside predetermined or prescribed or desired operational norms. *Id.* at 13:18–21.

The ’673 patent also describes the use of normative limits that derive operational norms from components so “any bearing that is a predetermined amount hotter than its axle mate” indicates a deviation from an operational norm that is defined by an axle bearing. Ex. 1001, 13:37–39. Ambient temperature may prescribe operational norms to identify “any bearing is at a temperature a predetermined amount above ambient.” *Id.* at 13:49–51.

Other operational norms defined by conditions of components are Wagon Average, which measures the average temperature of each bearing of a wagon over a time span as an operational norm against which deviations of each bearing are measured, and Fleet Average, which similarly measures the average temperature of each bearing of a fleet and uses the average as an operational norm against which the temperature of each bearing is compared to identify any deviations therefrom. Ex. 1001, 14:31–48.

Individual components may provide their own operational norm as in the Heating Rate of Change, which measures the percent of operating time that a bearing is heating quickly to identify the number of times a linear fit is above a threshold. Ex. 1001, 14:49–58. Other operational norms include predetermined temperatures for components such as bearings used to set an absolute alarm at a predetermined bearing temperature to indicate operation outside of safe or acceptable operational norms. *Id.* at 14:1–3.

We therefore interpret “nominal operating conditions” to mean “normative or expected conditions based on any of trends, conditions of components, ambient conditions, or predetermined values.”

3. "severity level"

We preliminarily interpreted "severity level" as "a type of fault that requires a particular action." Decision 8. Petitioner agrees with this interpretation. Reply 2–3. Patent Owner argues that a "level" is "a position in a scale or rank (as of achievement, significance, or value)" and a "fault" is "a physical or intellectual imperfection or impairment." PO Resp. 5. Patent Owner asserts that a fault is not used to describe severity levels. *Id.*

Patent Owner argues a "level" "is one of a plurality of discrete levels of some known value" or "'one of a plurality of known values indicating seriousness' of the deviation," but Patent Owner does not identify "known values" in the tiered alarm levels or Stage 1–4 Levelled Alarms described in the '673 patent. PO Resp. 6, 7 (citing Ex. 1001, 13:30–14:3, 12:56–65); Sur-reply 1–2. We find no known values to be identified in the '673 patent.

Stage 1–4 Levelled Alarms are "levels of alarms, based on severity," but each stage is a type of fault. Ex. 1001, 13:30–14:3. A Stage 1 Bearing Temp Alarm is given for "trending recommendations and repeat offender identifications" with no value used to define this level. *Id.* at 13:33–36.

A Stage 2 Axle Differential Alarm is the "condition" of a bearing that is a predetermined amount hotter than its axle mate. *Id.* at 13:37–39. It is not based on a known bearing temperature *value*. Instead, it occurs when a bearing's temperature exceeds the temperature of its axle mate by a certain amount (not disclosed). *Id.* It can occur at different bearing temperatures. Even if a predetermined amount is a known value, this alarm occurs when a bearing's temperature exceeds the temperature of its axle mate by that predetermined amount. *Id.* This alarm is based on the relative temperatures of axle bearings, and those values are not known or predetermined.

A Stage 3 Above Ambient Alarm is a "condition" that occurs when a bearing temperature is a predetermined amount above ambient. Ex. 1001, 13:49–51. A bearing's temperature must exceed ambient, which is an unknown value beforehand, by a certain amount that is not disclosed.

A Stage 4 Critical Alarm "is the absolute alarm set at a predetermined bearing temperature." Ex. 1001, 14:1–3. This predetermined temperature is not disclosed. At best, it pertains to a single alarm level. The other three alarm levels are not linked to known bearing temperature values.

Severity levels are assigned based on the fault that is identified by a deviation from nominal operating conditions. The severity levels equate to different bearing faults, rather than to known values that indicate different severity levels. Mr. Martin testifies that the inventors conceived of different severity levels of bearing fault defined by known values as shown below.

> Stage 1 Alarm = bearing temperature of 93ºC
> Stage 2 Alarm = bearing temperature of 124ºC
> Stage 3 Alarm = bearing temperature of 136ºC
> Stage 4 Alarm = bearing temperature of 160ºC

Ex. 2013 ¶ 14; *see also id.* ¶ 16 (Stage 1 Alert is a bearing temperature >200ºF, Stage 2 Alert is a bearing temperature >105ºF, Stage 3 Alert is a bearing temperature >190ºF, Stage 4 Alert is a bearing temperature >320ºF); Ex. 2050 11 (default temperature values for ambient and axle differential).

The inventors did not disclose these severity levels in the '673 patent. Instead, the '673 patent describes each alarm stage as a binary alarm; either a particular bearing temperature fault exists or it does not. Ex. 1001, 13:30–14:68. If a particular fault occurs, an alarm issues for that fault. Otherwise, no alarm issues for that fault. Each severity level covers a different bearing fault. Different severity levels link to different types of bearing faults. *Id.*

C. Prosecution History of the '673 Patent

In response to a traversal of the first Office Action (Ex. 1002, 106–120, 419–434), the Examiner issued a Notice of Allowability for all claims because the prior art did not render obvious "a control method applying a heuristic to said received data to determine deviations from nominal operating conditions; assigning a severity level to said deviations from nominal operating conditions; and determining an alarm condition based on said assigned severity level" (*id.* at 488–495).

D. Principles of Law

A patent claim is unpatentable under 35 U.S.C. § 103(a) if differences between the claimed subject matter and the prior art are such that the subject matter, as a whole, would have been obvious at the time the invention was made to a person having ordinary skill in the art to which said subject matter pertains. 35 U.S.C. § 103(a); *KSR Int'l Co. v. Teleflex Inc.*, 550 U.S. 398, 406 (2007). "The combination of familiar elements according to known methods is likely to be obvious when it does no more than yield predictable results." *KSR*, 550 U.S. at 416. Similarly, "if a technique has been used to improve one device, and a person of ordinary skill in the art would recognize that it would improve similar devices in the same way, using the technique is obvious unless its actual application is beyond his or her skill." *Id.* at 417.

The question of obviousness is resolved based on underlying factual determinations including: (1) the scope and content of the prior art; (2) any differences between the claimed subject matter and the prior art; (3) the level of ordinary skill in the art; and (4) when in evidence, objective evidence of non-obviousness. *Graham v. John Deere Co.*, 383 U.S. 1, 17–18 (1966). Neither party presents evidence of secondary considerations.

E. Ground 1: Obviousness Over LeFebvre

Petitioner asserts that claims 1–7, 10–18, and 20–22 are unpatentable under 35 U.S.C. § 103(a) over LeFebvre, which does not disclose expressly all limitations as part of a single embodiment. Pet. 18–41.

1. LeFebvre

LeFebvre was published on July 5, 2007. Ex. 1005, code (43). LeFebvre's system uses pads 16 with sensors 5 on bearing adapters 4 to measure loads and heat transmitted by axle bearing 2a through adapters 4 and transmit indications of fault or impending failure that pads 16 detect to a data control unit 23 on each railcar. *Id.* ¶¶ 18–21, 33–36, Figs. 3, 4.

LeFebvre applies heuristics to sensor data via an inference engine of search algorithms distributed between pads 16 and data control unit 23 to process sensor data to identify indications of fault, impending failure, and unsatisfactory behavior. Ex. 1005 ¶¶ 33–37, 53–66. The inference engine can identify periodicities and cross correlations in data to identify deviations from expected operating conditions such as changing loads and distributions at frequencies that indicate car hunting, swaying, or rocking for particular truck geometry and wheel rotation speed or repetitive patterns of forces at rotation frequencies that indicate wheel irregularities. *Id.* ¶¶ 54, 62. Specific bearing defects can be inferred from long term trends, alarm thresholds, temperatures of other bearings, and frequency spectrum analysis of vibrations emitted by bearings. *Id.* ¶¶ 58, 59.

Different types of fault and deviation result in different responses. Bearing defects can require preventative maintenance while wheel defects result in a wheel change out. Ex. 1005 ¶¶ 59, 60. A displaced bearing adapter requires urgent maintenance. *Id.* ¶ 64.

2. Claim 1

a. 1 Preamble: A method of monitoring operational characteristics of a railcar comprising the steps of:

(1) Petitioner's contentions

Petitioner contends that the preamble describes an intended use of the system and does not provide patentable weight. Pet. 18. Petitioner contends that, to the extent the preamble is limiting, LeFebvre discloses a monitoring system for railroad trains and a system that uses an instrumented roller bearing adapter pad to detect the occurrence and cause of poor performance at wheel set, truck, freight car, or train level. *Id.* at 19 (citing Ex. 1005 ¶ 1; Ex. 1003 ¶ 71).

(2) Patent Owner's arguments

Patent Owner does not contest Petitioner's assertions that LeFebvre discloses element 1 Preamble. *See generally* PO Resp.; Sur-reply.

(3) Conclusion

Based on the parties' contentions and record evidence, we determine that LeFebvre discloses or suggests element 1 Preamble to the extent that the preamble is considered to be limiting.

b. 1(a): receiving data or processed information regarding said operational characteristic from one or more sensing units on said railcar, said sensing units monitoring an operational characteristic of said railcar;

(1) Petitioner's contentions

Petitioner asserts that LeFebvre discloses a railcar monitoring system "comprising a plurality of instrumented pads 16, each of which comprises one or more sensors that measure operational parameters of the railcar." Pet. 19 (citing Ex. 1005 ¶¶ 19, 23, 52; Ex. 1003 ¶ 72).

Petitioner asserts that the sensors are temperature sensors and a skilled artisan would understand that LeFebvre's instrumented pad is a sensing unit. Pet. 19 (citing Ex. 1005, code (57), Abstr., ¶¶ 21, 33, 58; Ex. 1003 ¶ 72). Petitioner asserts that each instrumented pad 16 is a separate device mounted on the upper surface of a wheel bearing adapter 4 as shown in Figure 4, and Figure 5 depicts a plurality of instrumented pads 16 attached to different wheel bearing adapters. *Id.* at 19–20 (citing Ex. 1005 ¶¶ 19, 39, Figs. 4, 5; Ex. 1003 ¶¶ 73, 74). Petitioner asserts that each instrumented pad 16 in the Figure 5 embodiment communicates wirelessly with data control unit 23, which is mounted on the railcar body to receive data from instrumented pads 16 (sensing units) as recited in element 1(a) and also performs steps 1(b)–1(d). *Id.* at 20–21 (citing Ex. 1005 ¶ 24, Fig. 5; Ex. 1003 ¶ 75).

(2) Patent Owner's arguments

Patent Owner does not contest Petitioner's assertions that LeFebvre discloses or suggests element 1(a). *See generally* PO Resp.; Sur-reply.

(3) Conclusion

Based on the parties' contentions and evidence, we agree with and adopt Petitioner's undisputed analysis that LeFebvre discloses or suggests element 1(a). Accordingly, we determine Petitioner has demonstrated by a preponderance of evidence that LeFebvre discloses or suggests element 1(a).

c. 1(b): applying a heuristic to said received data to determine deviations from nominal operating conditions;

(1) Petitioner's contentions

Petitioner contends that LeFebvre's data control unit uses "inference engine techniques" as heuristics to analyze data that it receives from the instrumented pads. Pet. 21 (citing Ex. 1005 ¶¶ 36, 56, 95; Ex. 1003 ¶ 77).

Petitioner contends that LeFebvre describes the data control unit as an aggregator of information that is programmed to compare information from all of the trucks on the railcar and draw inferences from them as to the status of the car by using inference engine techniques to identify unsatisfactory behavior such as swaying, bouncing, or even partial derailment for the whole truck. Pet. 21 (citing Ex. 1005 ¶¶ 36, 56). Petitioner asserts that LeFebvre applies heuristics to the collected data to infer the presence of numerous conditions including bearing defects, wheel defects, wheel derailment, truck hunting, displaced roller bearing adapters, and brake performance and status, among others. *Id.* (citing Ex. 1005 ¶¶ 58–62, 64, 65; Ex. 1003 ¶ 79).

Petitioner contends that LeFebvre teaches that the data control unit may detect a wheel derailment condition by looking for a high frequency, periodically repeating load and a similar signal from both wheels in the wheel set. Pet. 22 (citing Ex. 1005 ¶¶ 60, 61). Petitioner asserts that the data control unit may detect track defects by "monitoring the vertical loads in the instrumented pads and comparing these between wheel sets." *Id.* (citing Ex. 1005 ¶ 66). Petitioner contends that LeFebvre even uses simple heuristics to monitor brake performance and status such as excessively high brake loads indicate brakes may cause wheels to bind or excessively low brake loads indicate that brakes are not working properly. (citing Ex. 1005 ¶ 65). Petitioner also asserts that these examples are well-known heuristics that would have been familiar to a skilled artisan. *Id.* (citing Ex. 1003 ¶ 79).

(2) Patent Owner's arguments

Patent Owner does not contest Petitioner's assertions that LeFebvre discloses or suggests element 1(b). *See generally* PO Resp.; Sur-reply.

(3) Conclusion

Based on the parties' contentions and evidence, we agree with and adopt Petitioner's undisputed analysis that LeFebvre discloses or suggests element 1(b). Accordingly, we determine Petitioner has demonstrated by a preponderance of evidence that LeFebvre discloses or suggests element 1(b).

d. 1(c): assigning a severity level to said deviations from nominal operating conditions; and

(1) Petitioner's contentions

Petitioner asserts that "LeFebvre's system does not generate an alert for every detected deviation from nominal operating conditions" because the instrumented pad only reports an error to the data control unit if a deviation is detected *and* "the magnitude is sufficient to cause alarm." Pet. 22 (citing Ex. 1005 ¶ 55; Ex. 1003 ¶ 80). Petitioner asserts that "the data control unit determines whether the railcar components 'are behaving ***sufficiently poorly*** that a report to the central data handling location or owner or operator or locomotive is needed." *Id.* (quoting Ex. 1005 ¶ 95). Petitioner contends that "LeFebvre claims a 'method of monitoring performance of [railcars]' that includes 'identifying performance behavior derived from said signals ***considered to be sufficient to cause alarm*** and communicating to the prime mover messages identifying ***only the performance behavior sufficient to cause alarm***.'" Pet. 23 (quoting claim 28 of Ex. 1005). Petitioner asserts that LeFebvre uses "means for communicating to said remote receiver ***only values indicative of critical departures of the performance criteria*** for a particular sensor in a particular railcar." *Id.* (quoting claim 9 of Ex. 1005). Petitioner asserts that LeFebvre distinguishes deviations that are not severe enough to raise an alarm and deviations severe enough to raise an alarm. *Id.*

Petitioner contends that LeFebvre's data control unit performs the step recited in element 1(c) because it assesses the severity of detected deviations and categorizes the deviations according to their severity, and it transmits an alarm to a remote receiver only if the deviation is severe enough to warrant an alarm being sent. Pet. 23 (citing Ex. 1003 ¶ 83).

(2) Patent Owner's arguments

Patent Owner argues, "assigning a severity level" means "assigning one from a plurality of known values indicating seriousness." PO Resp. 8. Patent Owner argues that the severity level enables the system and operators to assess the health of the monitored component on a non-binary scale so the action taken varies based on the severity of the alert. *Id.* at 8–9 (citing Ex. 1001, 12:44–46, 13:30–14:3; Ex. 2010 ¶ 41). Patent Owner argues (*id.* at 9):

> Lefebvre, in contrast, merely discloses the transmission of "relevant attributes and timing" in response to various described "irregularities in behavior." Lefebvre, ¶¶54-55; Ex. 2010, ¶41. A POSA would not consider Lefebvre to disclose "assigning a severity level" at least because Lefebvre only teaches a binary system in which (a) an alarm is issued if the magnitude is sufficient; or (b) no alarm is issued if the threshold is not exceeded, i.e., a single threshold. In fact, Petitioners arguments explicitly acknowledge that Lefebvre simply "distinguishes between (a) deviations from expected operating conditions that ***are not*** severe enough to raise an alarm; and (b) deviations that ***are*** severe enough to raise an alarm." Petition, 23; Ex. 2010, ¶¶40-41. There are no levels; it is either severe or it is not. Ex. 2010, ¶¶41-42. Thus, Petitioner acknowledges Lefebvre does not meet the plain language of limitation 1(c). *Id.*, ¶40. Put simply, Lefebvre merely establishes a simple threshold limit that when exceeded results in the instrumented pads sending messages to the data control unit. Lefebvre, ¶55. In fact, **no** severity level is assigned in Lefebvre; it either raises an alarm or does not and only does so if the inferred behavior passes a single predefined threshold. *Id.*, ¶41.

Patent Owner argues that "LeFebvre does not assign multiple levels of significance for the measured conditions and report unsatisfactory behavior in the form of alarms taking into account these multiple threshold levels" but instead "determine[s] if sensor data has crossed a threshold limit, and, if so, an alarm is sent." PO Resp. 10. Patent Owner asserts that LeFebvre does not use heuristics to convert or correlate data measured at instrumented pads 16 to operating conditions such as loads, frequencies, or forces, and does not use alarm levels to identify deviations from expected operating conditions.

(3) Analysis

As discussed in Section II.B.3. *supra*, we interpret assigning a severity level to said deviations from nominal operating conditions as determining a type of fault condition that requires a particular action. The '673 patent defines stages of alarms as different types of bearing problems that require particular action(s) for each. Ex. 1001, 13:30–14:3.

We find that LeFebvre assigns "a severity level" to faults that deviate from nominal operating conditions by a particular amount (threshold) just as the '673 patent defines an alarm for different types of bearing faults such as a bearing whose temperature exceeds the temperature of its axle mate or ambient by a threshold (Ex. 1001, 13:37–52) or deviates from the average bearing temperature of a wagon (Wagon Average) or fleet (Fleet Average) (*id.* at 14:23–48). LeFebvre provides an alarm when bearing temperatures exceed temperatures of other bearings by an alarm threshold. Ex. 1005 ¶ 58. LeFebvre provides alarms for other bearing faults as well. *Id.* ¶ 59.

LeFebvre assigns severity levels to indicate the seriousness of a fault even under Patent Owner's definition of "severity level." LeFebvre assigns "alarm levels" to different bearing temperature faults. Ex. 1005 ¶ 58.

LeFebvre assigns different severity levels to different bearing faults based on different values (alarm thresholds). Ex. 1005 ¶ 58. For example, high amplitude bearing loads that repeat periodically as a function of wheel diameter and speed indicate a flat spot or shelled wheel tread that requires a wheel change. Ex. 1005 ¶ 60. Higher frequency loads indicate a possible full derailment and catastrophic consequences, i.e., a higher severity level. *Id.* ¶ 61. Other bearing load levels indicate that a roller bearing adapter was displaced requiring urgent maintenance to avoid damage. *Id.* ¶ 64.

Frequency spectrum analysis of loads detected by sensors can identify different bearing defects, so different preventative maintenance *programs* can be performed. Ex. 1005 ¶ 59. If bearing loads indicate a roller bearing adapter is displaced, urgent maintenance can be scheduled. *Id.* ¶ 64. Lower severity levels of bearing fault require only *preventative maintenance* while more severe bearing fault levels require *urgent maintenance*. *Id.* ¶¶ 59, 64.

We disagree with Dr. Shamos' testimony that "[i]n LeFebvre, all alarms are of equal severity" because LeFebvre assigns different severity levels as discussed above. Ex. 2010 ¶ 45; Ex. 1005 ¶¶ 59–61, 64, 65. These severity levels determine different alarm conditions—preventative or urgent maintenance, wheel change, and full derailment. Ex. 1005 ¶¶ 59–61. They identify different levels of bearing fault rather than a binary system of fault or no fault as Patent Owner alleges. PO Resp. 10; Sur-reply 5.

(4) Conclusion

Based on the parties' contentions and evidence, we agree with and adopt Petitioner's analysis that LeFebvre discloses or suggests element 1(c). Accordingly, we determine Petitioner has demonstrated by a preponderance of evidence that LeFebvre discloses or suggests element 1(c).

e. 1(d): determining an alarm condition based on said assigned severity level.

(1) Petitioner's contentions

Petitioner contends that LeFebvre's data control unit determines whether an alarm message should be generated as follows:

> The data control unit then performs the assessments described above for the inference engine to check if the freight car, its trucks or wheels or axles are behaving ***sufficiently poorly*** that a report to the central data handling location or owner or operator or locomotive is needed. If so, then the report can be sent.

Pet. 24 (quoting Ex. 1005 ¶ 95 (emphasis added); citing Ex. 1003 ¶ 84).

Petitioner asserts that LeFebvre determines if the detected condition is sufficiently severe that an alarm is warranted, and, if so, the data control unit will send an alarm message upstream to the locomotive and/or a remote data handling location. Pet. 24 (citing Ex. 1005 ¶¶ 56, 95; Ex. 1003 ¶ 85).

(2) Patent Owner's arguments

Patent Owner presents the same arguments for element 1(d) as were presented for element 1(c) and discussed *supra*. PO Resp. 8–16. Patent Owner argues that Petitioner fails to establish that LeFebvre determines an alarm condition "based on said assigned severity level" because LeFebvre's system does not assign a severity level. *Id.* at 13.

(3) Analysis

As discussed in Section II.E.2.d. *supra*, LeFebvre "assign[s] a severity level" to different faults (i.e., deviations from nominal operating conditions) based on the severity of the deviation, i.e., the faults are a sufficient level of severity to require an alarm and require different actions based on the level of severity. Ex. 1005 ¶¶ 52–66, 95; *id.* ¶¶ 55 (sufficient magnitude to cause alarm), 56 (serious trouble is inferred), 95 (behaving sufficiently poorly).

We agree with Petitioner that LeFebvre applies heuristics to data with inference engine techniques to identify deviations (faults) including bearing defects, wheel defects, wheel derailment, truck hunting, displaced roller bearing adapters, and brake performance as recited in element 1(b). Pet. 21–22 (citing Ex. 1005 ¶¶ 36, 56, 58–62, 64, 65, 66, 95; Ex. 1003 ¶ 79).

LeFebvre does not generate alerts for every deviation from nominal operating conditions but instead assigns a severity level to a deviation and generates an alarm if "the magnitude is sufficient to cause alarm" or components "are behaving sufficiently poorly." Ex. 1005 ¶¶ 55, 95, claims 9, 12, 21, 28; *see* Ex. 1003 ¶ 80 for element 1(c); Reply 4–5. Mr. Ricca testifies that LeFebvre distinguishes between (1) deviations from expected operations that are not severe enough to issue an alarm and (2) deviations that are severe enough to issue an alarm, and a data control unit defines deviations by their severity level. Ex. 1003 ¶¶ 82, 83 (cited in Pet. 23).

Even if "assigning a severity level" required multiple severity levels, as Patent Owner argues, LeFebvre defines multiple levels of severity. Of the bearing faults that are severe enough to warrant an alarm message, some bearing faults indicate a need for *preventative maintenance*; other bearing faults require scheduling *urgent maintenance*. Ex. 1003 ¶¶ 59, 64. Some wheel problems require a *wheel change*; others cause *derailment*. *Id.* ¶¶ 60, 61. Alarms are sent only for certain severity levels. *Id.* ¶¶ 35 (pads detect impending failure), 53 (only observations that imply fault or misbehavior are recognized), 55 (if a deviation is inferred and its magnitude (i.e., severity) is sufficient to cause alarm, data is sent to the data control unit), 56 (only when serious trouble is inferred are messages are sent to the locomotive), 95 (only generate reports when a component is "behaving sufficiently poorly").

(4) Conclusion

Based on the parties' contentions and evidence, we agree with and adopt Petitioner's analysis that LeFebvre discloses or suggests element 1(d). Accordingly, we determine Petitioner has demonstrated by a preponderance of evidence that LeFebvre discloses or suggests element 1(d).

f. Conclusion

We determine that Petitioner has established by a preponderance of evidence that claim 1 is unpatentable over LeFebvre.

3. Claim 2: further comprising the initial step of establishing wireless communication with said one or more remote sensing units.

a. Petitioner's contentions

Petitioner asserts that LeFebvre's instrumented pads (remote sensing units) communicate wirelessly with a data control unit (processing unit). Pet. 24 (citing Ex. 1005 ¶¶ 24, 31; Ex. 1003 ¶ 87). Petitioner asserts that instrumented pads 16 and data control unit 23 form a wireless mesh network on each rail car to exchange data using their microprocessors, radios, and a wireless networking protocol (Zigbee mesh networking protocol). *Id.* at 25 (citing Ex. 1005 ¶¶ 31, 32, 39, Fig. 5; Ex. 1003 ¶¶ 87–89).

b. Patent Owner's arguments

Patent Owner does not contest Petitioner's assertions that LeFebvre discloses or suggests claim 2. *See generally* PO Resp.; Sur-reply.

c. Conclusion

Based on the parties' contentions and evidence, we agree with and adopt Petitioner's undisputed analysis that LeFebvre discloses or suggests claim 2. Accordingly, we determine Petitioner has demonstrated by a preponderance of evidence that claim 2 is unpatentable over LeFebvre.

4. Claim 3–7

a. Petitioner's contentions

Petitioner contends that LeFebvre discloses remote sensing units that form a mesh network as recited in claim 3. Pet. 26 (citing Section X.A.2. contentions for claim 2; Ex. 1003 ¶ 90). Petitioner contends that LeFebvre's data control unit is mounted on the railcar and comprises a microprocessor that performs each of steps a.–d. of claim 1 as recited in claim 4. Pet. 26 (citing Sections X.A.1.b.–X.A.1.e. contentions for elements 1(a)–1(d) and X.A.17 contentions for claim 20; Ex. 1003 ¶ 91).

Petitioner asserts that LeFebvre discloses that the processing unit that is located on the railcar is part of the mesh network as recited in claim 5. Pet. 26 (citing Section X.A.2. contentions for claim 2; Ex. 1003 ¶ 92).

Petitioner contends that LeFebvre discloses data control unit 23 is a processing unit that transmits data and alarm messages to a remote location as recited in claim 6 by passing messages to communications device 24 for onward transmission to the locomotive or other remote receivers. Pet. 26 (citing Ex. 1005 ¶ 38; Ex. 1003 ¶ 93; Section X.A.1.e. contentions for element 1(d)). Petitioner contends that the communications device may be a cellular or satellite radio system, and the remote receiver may be a remote data handling service or central data handling location. *Id.* (citing Ex. 1005 ¶¶ 25, 52, 95; Ex. 1003 ¶ 94). Petitioner asserts that LeFebvre's data control unit is capable of transmitting data and alarm messages to a remote location as recited in claim 7, and the alarm message includes data (signals or values) collected from sensors indicating the presence of a severe condition or a failure. Pet. 27 (citing Ex. 1005, claims 9, 12, 21; Ex. 1003 ¶¶ 96–99; Sections X.A.1.e. and X.A.6. contentions for element 1(d) and claim 6).

b. Patent Owner's arguments

Patent Owner does not contest Petitioner's assertions that LeFebvre discloses or suggests claims 3–7. *See generally* PO Resp.; Sur-reply.

c. Conclusion

Based on the parties' contentions and evidence, we agree with and adopt Petitioner's undisputed analysis that LeFebvre discloses or suggests claims 3–7. Accordingly, we determine Petitioner has demonstrated by a preponderance of evidence that claims 3–7 are unpatentable over LeFebvre.

5. Claim 10

a. 10 Preamble: A method of monitoring a temperature of a desired part of a railcar, comprising:

(1) Petitioner's contentions

Petitioner contends that LeFebvre discloses a method of monitoring a temperature of a desired part of a railcar. Pet. 28 (citing Section X.A.1.a. contentions for the preamble of claim 1; Ex. 1003 ¶ 100).

(2) Patent Owner's arguments

Patent Owner does not contest Petitioner's assertions that LeFebvre discloses element 10 Preamble. *See generally* PO Resp.; Sur-reply.

(3) Conclusion

Based on the parties' contentions and evidence, we agree with and adopt Petitioner's undisputed analysis that LeFebvre discloses or suggests 10 Preamble. Accordingly, we determine Petitioner has demonstrated by a preponderance of evidence that LeFebvre discloses or suggests 10 Preamble.

b. 10(a): sensing the temperature of a part of the railcar other than the desired part by use of a temperature sensor in thermal communication with said other part;

10(b) determining the temperature of the desired part by use of the temperature sensed in step (a);

(1) Petitioner's contentions

Petitioner asserts that LeFebvre discloses a railcar monitoring system including a plurality of instrumented pads 16 that each comprises one or more temperature sensors that can be used to monitor the temperature of a wheel bearing associated with the instrumented pad by measuring a temperature of wheel bearing adapter 4 (a part other than the desired part) that is disposed adjacent to the bearing and using that temperature to infer a temperature of wheel bearing 2a (the desired part) as recited in elements 10(a) and 10(b). Pet. 28–29 (citing Ex. 1005 ¶¶ 19, 20, 33, 58, Fig. 4; Section X.A.1.b. contentions for element 1(a); Ex. 1003 ¶¶ 101–103). Petitioner asserts that a skilled artisan would understand direct attachment to a wheel bearing is impractical because it is a rotating mechanical component so its temperature must be measured indirectly by attaching a temperature sensor to a nearby, stationary component in thermal communication with it as is commonplace in the industry. *Id.* at 29–30 (citing Ex. 1003 ¶¶ 104–106).

(2) Patent Owner's arguments

Patent Owner does not contest Petitioner's assertions that LeFebvre discloses or suggests elements 10(a) and 10(b). *See generally* PO Resp.; Sur-reply.

(3) Conclusion

Based on the parties' contentions and evidence, we agree with and adopt Petitioner's undisputed analysis that LeFebvre discloses or suggests elements 10(a) and 10(b). Accordingly, we determine Petitioner has demonstrated by a preponderance of evidence that LeFebvre discloses or suggests elements 10(a) and 10(b).

c. 10(c): determining if said temperature of the desired part is outside an acceptable range of temperatures; and

(1) Petitioner's contentions

Petitioner asserts that LeFebvre monitors the temperature of the wheel bearing to determine if it is outside an acceptable range as recited in element 10(c) and to ensure that the bearing does not become overheated by using a temperature sensor in instrumented pad 16 to monitor relative changes in temperature against other bearings and against an alarm threshold. Pet. 30–31 (citing Ex. 1005 ¶¶ 33, 58; Ex. 1003 ¶ 108).

(2) Patent Owner's arguments

Patent Owner argues that LeFebvre monitors changes in a bearing's temperature against other bearings so "LeFebvre is not comparing to an acceptable range of temperatures, it is comparing two sensors to each other." PO Resp. 16 (citing Ex. 1005 ¶¶ 33, 58; Ex. 2010 ¶¶ 48, 49). Patent Owner asserts that a skilled artisan would not consider the comparison of relative temperature changes against other bearings to be determining whether a temperature reading is inside or outside an acceptable range of temperatures. *Id.* at 16–17 (citing Ex. 1005 ¶¶ 36, 58; Ex. 2010 ¶¶ 49–51).

(3) Analysis

We agree with Petitioner that LeFebvre's system determines if the temperature of a bearing is outside an acceptable range of temperatures. LeFebvre compares a temperature of a bearing to temperatures of other bearings and to long term trends, alarm levels, and/or alarm thresholds to identify a bearing fault and its severity. Ex. 1005 ¶ 58. The other bearing temperatures, long term trends, alarm levels, and alarm thresholds define acceptable ranges of bearing temperatures as in the '678 patent.

LeFebvre compares bearing temperatures to such temperature ranges to detect deviations of sufficient magnitude to warrant an alarm. Ex. 1005 ¶ 58. LeFebvre thus determines whether a bearing's temperature is outside an acceptable range of temperatures established by the temperatures of other bearings, long term trends in temperatures of other bearings, alarm levels, and/or alarm thresholds that define acceptable temperature ranges (e.g., a range of temperatures below an alarm threshold or an alarm level). *Id.*

Comparing temperatures of an individual bearing against a range of temperatures of other bearings "can be used to avoid false alarms from wayside hotbox detectors" that detect bearing temperatures. Ex. 1005 ¶ 58. A range of temperatures defined by other bearings provides an acceptable range of temperatures against which a single bearing's temperature can be compared to determine deviations and an alarm condition, or the well-being of a bearing can be inferred using trends or alarm levels that also provide acceptable ranges of temperatures to avoid potential bearing burn off and derailment. *Id.*; *see* Decision 21.

The '673 patent does not describe an acceptable range of temperatures as Patent Owner requires of the prior art. Decision 20. It compares bearing temperatures to temperatures of other bearings on the same axle, wagon, or fleet (Ex. 1001, 13:37–39, 14:31–48, 15:15–36) to determine if a bearing's temperature deviates from a temperature range defined by other bearings (*id.*; Reply RMTA 8–9 (arguing that temperature thresholds define ranges).

LeFebvre similarly compares temperatures of single bearings to the temperatures of other bearings, long term trends, alarm thresholds, and alarm levels to determine if a bearing's temperature is outside an acceptable range defined by other bearings, trends, or alarm levels/thresholds. Ex. 1005 ¶ 58.

If a bearing's temperature falls outside (above) an acceptable range of temperatures defined by other bearings, alarm thresholds, alarm levels, or long term trends, an alarm message is issued to avoid a potential for bearing burn off and possible derailment. Ex. 1005 ¶ 58. An alarm threshold or a temperature value defines an acceptable temperature range. Temperatures below a threshold/level are acceptable; temperatures above are not. *Id.*

Dr. Shamos testifies that the temperatures of other bearings cannot provide an "acceptable range of temperatures" because "if all the bearings on a car are running hot, the system may miss a hot temperature reading because it [] does not deviate sufficiently from the car average." Ex. 2010 ¶ 50. His testimony does not address the '673 patent's description of similar acceptable ranges of bearing temperatures that use average temperatures of bearings on a wagon or a fleet or an axle mate bearing to "Flag any bearing with a certain standard deviation." Ex. 1001, 13:37–39, 14:39, 48. Claim 10 covers such embodiments and is not limited in scope as Dr. Shamos implies.

LeFebvre's description of "an alarm threshold," "trends," and "alarm levels" discloses or suggests to a skilled artisan that the temperature of a bearing is compared to temperatures of other bearings in trends that define an acceptable range of temperatures, and a bearing temperature is compared to alarm thresholds or levels that define acceptable temperature ranges for a bearing using direct measurements that avoid false alarms. Ex. 1005 ¶ 58. LeFebvre discloses, "[t]he well-being of a roller bearing can be inferred using either trends or alarm levels, avoiding a potential bearing burn off and possible derailment." *Id.* Trends and levels implicitly define acceptable ranges of temperatures that fall above, below, or within these trends/levels.

(4) Conclusion

Based on the parties' contentions and evidence, we agree with and adopt Petitioner's analysis that LeFebvre discloses or suggests element 10(c), and we determine Petitioner has demonstrated by a preponderance of evidence that LeFebvre discloses or suggests element 10(c).

d. 10(d): transmitting an alarm if in step (c) it is determined that the temperature of the desired part is outside an acceptable range.

(1) Petitioner's contentions

Petitioner contends that LeFebvre generates an alarm message if a monitored parameter, such as temperature, is outside the expected range and the magnitude of the deviation is sufficient to cause alarm. Pet. 31 (citing Section X.A.1.3. contentions for element 1(e); Ex. 1003 ¶¶ 109, 110).

(2) Patent Owner's arguments

Patent Owner argues that "since the steps in limitation 10(c) are not performed, then the limitations in 10(d) cannot be either" and "Lefebvre does not disclose monitoring parameters, such as temperature, outside an expected range; it discloses comparing it to other bearings." PO Resp. 17.

(3) Analysis

We determine that LeFebvre discloses or suggests element 10(d) by transmitting an alarm when the temperature of a bearing falls outside an acceptable range defined by temperatures and temperature changes of other bearings, long term trends, alarm thresholds, and alarm levels as discussed in Section II.E.5.c. *supra*. Ex. 1005 ¶¶ 52, 53, 55–58, 95; *see* Ex. 1001, 13:49–51, 14:1–3, 14:23–25. Each alarm threshold, trend, or alarm level defines an acceptable range of temperatures as Patent Owner recognizes. *See* Reply RMTA 8–9 (arguing that temperature thresholds define ranges).

(4) Conclusion

Based on the parties' contentions and evidence, we agree with and adopt Petitioner's analysis that LeFebvre discloses or suggests element 10(d), and we determine Petitioner has demonstrated by a preponderance of evidence that LeFebvre discloses or suggests element 10(d).

e. Conclusion

We determine that Petitioner has established by a preponderance of evidence that claim 10 is unpatentable over LeFebvre.

6. Claim 11: further comprising the step of determining the temperature of the ambient air, which temperature is used in the determination of step (b).

a. Petitioner's contentions

Petitioner asserts that LeFebvre uses a second temperature sensor to monitor ambient air temperature and the distributed inference engine uses that measurement to perform statistical analysis of the collected data. Pet. 31 (citing Ex. 1005 ¶ 37; Ex. 1003 ¶ 111). Petitioner asserts that sending ambient temperature data to instrumented pads would be understood to be used to calibrate the temperature data received from the sensors. *Id.* (citing Ex. 1005 ¶ 93; Ex. 1003 ¶ 112). Petitioner asserts that a skilled artisan would understand that ambient temperatures are used to calibrate readings from temperature sensors in an outdoor environment, and "[t]he only plausible reason that LeFebvre's system would collect information about ambient temperature, and then transmit it to the instrumented pads . . . is for precisely this purpose." Pet. 32 (citing Ex. 1005 ¶ 93; Ex. 1003 ¶ 113).

b. Patent Owner's arguments

Patent Owner does not contest Petitioner's assertions that LeFebvre discloses or suggests claim 11. *See generally* PO Resp.; Sur-reply.

c. Conclusion

Based on the parties' contentions and evidence, we agree with and adopt Petitioner's undisputed analysis that LeFebvre discloses or suggests claim 11. Accordingly, we determine Petitioner has demonstrated by a preponderance of evidence, that claim 11 is unpatentable over LeFebvre.

7. Claim 12: wherein steps (a) through (d) are carried out by a single unit attached to said railcar.

a. Petitioner's contentions

Petitioner contends that LeFebvre discloses an instrumented pad that can carry out steps 10(a)–10(d) as recited in claim 12. Pet. 32–33 (citing Ex. 1003 ¶ 119). Petitioner asserts that the instrumented pad can include a temperature sensor that senses the temperature of a part of the railcar other than the desired part as recited in step 10(a) and determines the temperature of the desired part using this sensed temperature as recited in step 10(b). *Id.* (citing Sections X.A.1.b. and X.A.8.b. contentions for elements 1(a), 10(a), and 10(b); Ex. 1003 ¶ 116). Petitioner asserts that the instrumented pad has a microprocessor unit that uses heuristics to determine the presence of an alarm condition as recited in step 10(c) by collecting measurements as a time series, using inference engine heuristics to perform statistical analysis of the measurements, and detecting whether a bearing temperature falls outside an acceptable temperature range. Pet. 32–33 (citing Ex. 1005 ¶¶ 21, 54, 55, 58; Section X.A.8.c. contentions for element 10(c); Ex. 1003 ¶ 117). Petitioner asserts that the instrumented pad sends an alarm message with the relevant data to the data control unit if an issue is detected and "the magnitude is sufficient to cause alarm." Pet. 33 (citing Ex. 1005 ¶ 55; Section X.A.8.d. contentions for element 10(d); Ex. 1003 ¶ 118).

b. Patent Owner's arguments

Patent Owner does not contest Petitioner's assertions that LeFebvre discloses or suggests claim 12. *See generally* PO Resp.; Sur-reply.

c. Conclusion

Based on the parties' contentions and evidence, we agree with and adopt Petitioner's undisputed analysis that LeFebvre discloses or suggests claim 12. Accordingly, we determine Petitioner has demonstrated by a preponderance of evidence, that claim 12 is unpatentable over LeFebvre.

8. Claim 13: The method of claim 1 wherein steps (a) through (d) can be carried out at different event engines distributed among at least two of said sensor units, a communication management unit, and a mobile or land base station.

a. Petitioner's contentions

Petitioner asserts that LeFebvre analyzes data collected from sensors at the instrumented pads and the data control unit. Pet. 33 (citing Ex. 1005 ¶ 53). Petitioner asserts that part of the data analysis is done at the pads and only relevant information is transmitted to the data control unit from the pads for further analysis and recognition of faults. *Id.* Petitioner asserts that the instrumented pads on each railcar perform a first pass analysis of sensor data corresponding to steps 10(a)–10(d) and, if a potential fault condition is detected, the relevant data is passed to the data control unit, where further analysis is conducted. *Id.* at 34 (citing Ex. 1003 ¶ 121). Petitioner asserts that LeFebvre's system conducts data analysis on at least two different event engines, one of which is located on the instrumented pads and another of which is located on the data control unit, and these two systems work in tandem to form what LeFebvre calls a "distributed inference engine." *Id.* (citing Ex. 1005, ¶ 53; Ex. 1003 ¶ 121).

b. Patent Owner's arguments

Patent Owner does not contest Petitioner's assertions that LeFebvre discloses or suggests claim 13. *See generally* PO Resp.; Sur-reply.

c. Analysis

We agree with Petitioner that LeFebvre's distributed inference engine performs essential functions at microprocessors on instrumented pads and data control unit 23. Pet. 33; Ex. 1005 ¶ 53. Instrumented pads 16 receive sensor data regarding an operational characteristic of a railcar as recited in step 1(a). Ex. 1005 ¶¶ 33–35. They apply inference engine algorithms to the data to identify behavior detectable at pad level as recited in element 1(b) and severe enough to cause alarm (severity level) as recited in element 1(c). *Id.* ¶¶ 54, 55. Instrumented pads 16 send an alarm to the data control unit if the magnitude level of deviation is sufficient to warrant an alarm as recited in element 1(d). *Id.*

Data control units 23 apply inference engine techniques (heuristics) to such data and information to determine deviations from nominal operating conditions for the whole truck as recited in element 1(b). Ex. 1005 ¶¶ 36, 56, 95. Data control units 23 assign a severity level to determined deviations by assessing whether a problem (trouble, unsatisfactory behavior) is serious or a freight car, trucks, wheels, or axles are behaving sufficiently poorly that an alarm to the central data handling location is needed as recited in element 1(c). *Id.* ¶¶ 36, 54, 56, 62, 95. Finally, data control units 23 determine an alarm condition based on the assigned severity level as recited in element 1(d) by sending an alarm report to the (1) central data handling location, (2) owner, (3) operator, and/or (4) locomotive because it is determined that an alarm report to one or more of these entities is needed. *Id.* ¶¶ 56, 95.

d. Conclusion

Based on the parties' contentions and evidence, we agree with and adopt Petitioner's undisputed analysis that LeFebvre discloses or suggests claim 13. Accordingly, we determine Petitioner has demonstrated by a preponderance of evidence, that claim 13 is unpatentable over LeFebvre.

9. Independent Claim 14

a. 14 Preamble: A method for monitoring the operation of a railcar performed by a communication management unit disposed on said railcar comprising the steps of:

(1) Petitioner's contentions

Petitioner asserts that LeFebvre's data control unit is a communication management unit that performs each step recited in claim 14. Pet. 35 (citing Section X.A.1.a. contentions for element 1 Preamble; Ex. 1003 ¶ 123).

(2) *Patent Owner's arguments*

Patent Owner does not contest Petitioner's assertions that LeFebvre discloses or suggests claim 14 Preamble. *See generally* PO Resp.; Sur-reply.

(3) Conclusion

Based on the parties' contentions and evidence, we agree with and adopt Petitioner's undisputed analysis that LeFebvre discloses or suggests 14 Preamble, and we determine Petitioner has demonstrated by a preponderance of evidence, that LeFebvre discloses or suggests 14 Preamble.

b. 14(a): wirelessly receiving data from one or more sensing units which periodically collect readings from one or more sensors disposed on said railcar;

(1) Petitioner's contentions

Petitioner asserts that LeFebvre uses instrumented pads with sensors to measure parameters of a railcar and communicate wirelessly with a data control unit mounted on the railcar body. Pet. 35 (citing Ex. 1003 ¶ 124).

Petitioner asserts that LeFebvre's instrumented pad sends an alarm message to a data control unit when the magnitude of a fault is sufficient to cause alarm. Pet. 35–36 (citing Ex. 1005 ¶ 55; Ex. 1003 ¶ 125). Petitioner asserts that the instrumented pads periodically collect readings from sensors when the pads awake on a schedule or detect indications of fault or failure. *Id.* (citing Ex. 1005 ¶¶ 34, 35, claim 22; Ex.1003 ¶¶ 126, 127).

(2) Patent Owner's arguments

Patent Owner does not contest Petitioner's assertions that LeFebvre discloses or suggests claim 14(a). *See generally* PO Resp.; Sur-reply.

(3) Conclusion

Based on the parties' contentions and evidence, we agree with and adopt Petitioner's undisputed analysis that LeFebvre discloses or suggests 14(a). Accordingly, we determine that Petitioner has demonstrated by a preponderance of evidence, that LeFebvre discloses or suggests 14(a).

c. 14(b): heuristically analyzing said received data to determine if an actual failure exists on said railcar or to predict potential or imminent failures based on a statistical analysis of said received data; and

(1) Petitioner's contentions

Petitioner asserts that the data control unit of LeFebvre's system acts as an aggregator of information by collecting data from each instrumented pad on the railcar and using "inference engine techniques" (i.e., heuristics) to analyze the data collected from one or more sensor units to determine the existence of actual failure conditions, such as a flat spot or shelled wheel tread or a wheel derailment. Pet. 36–37 (citing Ex. 1005 ¶¶ 36, 56, 58–66, 95; Section X.A.1.c. contentions for element 1(b); Ex. 1003 ¶¶ 128, 129).

Petitioner asserts that LeFebvre applies heuristics to the data collected from sensor units to predict *potential or imminent* failures using a statistical analysis to identify "long term trends" in wheel bearing temperatures to avoid a potential bearing burn off and derailment or to infer bearing defects from frequency spectrum analysis, preferably in early stages for preventative maintenance. Pet. 37 (citing Ex. 1005 ¶¶ 58–66; Ex. 1003 ¶ 130).

(2) Patent Owner's arguments

Patent Owner argues that paragraphs 57–66 in LeFebvre describe certain conditions that are directly measured such as bearing temperature. PO Resp. 18. Patent Owner argues that Petitioner does not explain how Lefebvre's disclosure can be used to determine an actual failure or predict potential or imminent failures because the analysis is entirely conclusory. *Id.* Patent Owner asserts that "Petitioner also relies on the same disclosure in Lefebvre for both heuristic analysis and statistical analysis, ignoring that the different words 'heuristics' and 'statistical analysis' are recited in different claim elements." *Id.* at 18–19.

(3) Analysis

We agree with Petitioner that LeFebvre's system uses heuristics and statistical analysis to determine/predict actual/imminent failures such as wheel damage and derailment. Pet. 37 (citing Ex. 1005 ¶¶ 60, 61). High amplitude loads detected by a load sensor are analyzed to determine if they repeat periodically as a function of wheel diameter and speed to identify an actual wheel failure, e.g., a flat spot or shelled wheel tread. Ex. 1005 ¶ 60. Using the same instruments as for the Wheel Condition but looking for a higher frequency and similar signal from both wheels in the set can identify another type of actual failure, i.e., full derailment. *Id.* ¶ 61; Tr. 16:24–17:21.

LeFebvre uses heuristics and statistical analysis of load sensor data for longitudinal, lateral, and yawing forces and rapidly changing loads at wheel sets on a truck(s) of a car to determine truck and axle hunting and truck warp potential failures that occur at frequencies determined by truck geometry and wheel rotation speed. Ex. 1005 ¶¶ 54, 62. Potential car swaying and rocking failures are identified by statistical analysis of frequencies of mass spring systems of suspension or load. *Id.* ¶ 54 (periodicities, cross-correlations).

LeFebvre predicts other potential or imminent failures using statistical analysis. Ex. 1005 ¶¶ 58–66 (cited in Pet. 37). LeFebvre uses heuristics of its inference engine algorithms to perform statistical analysis to identify "*periodicities and cross correlations* in and between time series so that any behavior detectable at pad level will be seen" at the data control unit. Ex. 1005 ¶ 54; Reply 9–10. To avoid a potential bearing burn off and potential derailment, the heuristic analysis considers *long term trends* to link bearing temperatures to bearing conditions. *Id.* ¶ 58. LeFebvre also uses frequency spectrum statistical analysis of *repeating patterns or trends* in data sets to identify failing bearings. *Id.* ¶ 59; Ex. 1030 ¶ 16. Heuristic and statistical analysis of periodically repeating high impact loads can identify a potential flat spot or shelled wheel or actual wheel failure. Ex. 1005 ¶ 60. Higher frequency statistical analysis can prevent potential derailment. *Id.* ¶ 61.

Mr. Ricca testifies, "a [skilled artisan] would understand that in the course of performing Frequency Spectrum Analysis, statistical methods are used that expose minimums, maximums, mean values, degrees of deviation, and rates of change from previous data." Ex. 1030 ¶ 16; Ex. 1003 ¶ 130 (frequency spectrum analysis and heuristic analysis of long term trends in bearing temperature are types of statistical analysis); *see* Tr. 16:24–18:16.

(4) Conclusion

Based on the parties' contentions and evidence, we agree with and adopt Petitioner's analysis that LeFebvre discloses or suggests 14(b). Accordingly, we determine Petitioner has demonstrated by a preponderance of evidence, that LeFebvre discloses or suggests 14(b).

d. 14(c): communicating the results of said analysis to an off-railcar location.

(1) Petitioner's contentions

Petitioner contends that LeFebvre discloses that the data control unit is capable of transmitting the data and alarm messages to a remote location. Pet. 38 (citing Section X.a.6 contentions for claim 6; Ex. 1003 ¶ 131).

(2) Patent Owner's arguments

Patent Owner does not contest Petitioner's assertions that LeFebvre discloses or suggests claim 14(c). *See generally* PO Resp.; Sur-reply.

(3) Analysis

We find that LeFebvre's system identifies trouble and sends alarms. Ex. 1005 ¶ 53. Data control unit 23 sends alarms to remote locations when it detects faults of sufficient magnitude. *Id.* ¶¶ 52–66. Reports are sent to a central data handling location, operator, or locomotive when components are "behaving sufficiently poorly." *Id.* ¶ 95. When serious trouble is identified, alerts are sent to a locomotive or remote data service. *Id.* ¶ 56. Alerts can identify actual and potential defects requiring maintenance. *Id.* ¶¶ 58–66.

(4) Conclusion

Based on the parties' contentions and evidence, we agree with and adopt Petitioner's undisputed analysis that LeFebvre discloses or suggests 14(c). Accordingly, we determine that Petitioner has demonstrated by a preponderance of evidence that LeFebvre discloses or suggests 14(c).

e. Conclusion

We determine that Petitioner has established by a preponderance of evidence that claim 14 is unpatentable over LeFebvre.

10. Claim 15: wherein each of said sensing units can make a determination of an alarm condition based on data collected by the sensing unit, said method further comprising the step of: a. wirelessly receiving notice of said alarm condition from said sensing unit; and

b. communicating said alarm condition to an off-railcar location.

Petitioner asserts that LeFebvre's instrumented pad collects data from its sensors, analyzes the collected data using heuristics, determines whether an alarm should be raised, and, if needed, sends an alarm message upstream to the data control unit via wireless communications as recited in element 15(a). Pet. 38 (citing Sections X.A.2, X.A.10, X.A.12.b. contentions for claims 2, 12, and element 14(a); Ex. 1003 ¶¶ 133, 134). Petitioner contends that LeFebvre communicates an alarm condition to an off-railcar location as recited in element 15(b). Pet. 38 (citing Section X.A.12.d. contentions for element 14(c); Ex. 1003 ¶¶ 135, 136).

a. Patent Owner's arguments

Patent Owner does not contest Petitioner's assertions that LeFebvre discloses or suggests elements 15(a) and 15(b). *See generally* PO Resp.; Sur-reply.

b. Conclusion

Based on the parties' contentions and evidence, we agree with and adopt Petitioner's undisputed analysis that LeFebvre discloses or suggests elements 15(a) and 15(b). We determine that Petitioner has established by a preponderance of evidence that claim 15 is unpatentable over LeFebvre.

11. Claims 16: further comprising the steps of:
a. making a determination of an alarm condition based on data received from two or more of said sensing units; and
b. communicating said alarm condition to an off-railcar location.

a. Petitioner's contentions

Petitioner contends that LeFebvre's data control unit aggregates data from instrumented pads and analyzes the data to determine if an alarm condition exists as recited in element 16(a). Pet. 39 (citing Section X.A.12.c. contentions for element 14(b); Ex. 1003 ¶ 137). Petitioner asserts that LeFebvre's data control unit sends an alarm message to the locomotive or a remote data handling location if the detected condition is sufficiently severe that an alarm is warranted as recited in element 16(b). Pet. 39 (citing Section x.A.1.e. contentions for element 1(d); Ex. 1003 ¶ 138).

b. Patent Owner's arguments

Patent Owner does not contest Petitioner's assertions that LeFebvre discloses or suggests elements 16(a) and 16(b). *See generally* PO Resp.; Sur-reply.

c. Conclusion

Based on the parties' contentions and evidence, we agree with and adopt Petitioner's undisputed analysis that LeFebvre discloses or suggests elements 16(a) and 16(b). Accordingly, we determine that Petitioner has established by a preponderance of evidence that claim 16 is unpatentable over LeFebvre.

12. Claim 17: further comprising the step of placing said one or more sensing units in a stand-by state when said one or more sensing units is not reading data from any of said sensors or transmitting data.

a. Petitioner's contentions

Petitioner contends that LeFebvre periodically places the instrumented pad in a low-power or "standby" state as recited in claim 17. Pet. 39 (citing Section X.A.12.b. contentions for element 14(a); Ex. 1003 ¶ 140).

b. Patent Owner's arguments

Patent Owner does not contest Petitioner's assertions that LeFebvre discloses or suggests claim 17. *See generally* PO Resp.; Sur-reply.

c. Conclusion

Based on the parties' contentions and evidence, we agree with and adopt Petitioner's undisputed analysis that LeFebvre discloses or suggests claim 17, and we determine Petitioner has established by a preponderance of evidence that claim 17 is unpatentable over LeFebvre.

13. Claim 18: further comprising the step of joining a mesh network consisting of one or more sensing units located on said railcar.

a. Petitioner's contentions

Petitioner contends that LeFebvre discloses the step of joining a mesh network of one or more sensing units as recited in claim 18. Pet. 39 (citing Section X.A.2. contentions for claim 2; Ex. 1003 ¶ 142).

b. Patent Owner's arguments

Patent Owner does not contest Petitioner's assertions that LeFebvre discloses or suggests claim 18. *See generally* PO Resp.; Sur-reply.

c. Conclusion

Based on the parties' contentions and evidence, we agree with and adopt Petitioner's undisputed analysis that LeFebvre discloses or suggests claim 18, and we determine Petitioner has established by a preponderance of evidence that claim 18 is unpatentable over LeFebvre.

14. Claim 20: further comprising the steps of:
a. saving data received from said one or more sensing units in memory; and
b. comparing data received with said saved data to identify trends or deviations from normal readings of said data stored in memory.

a. Petitioner's contentions

Petitioner contends that LeFebvre discloses that each data control unit contains a microprocessor, and a skilled artisan would understand that data control units include memory that stores data received from the instrumented pads so the stored data can be analyzed using heuristics, a determination can be made whether an alarm should be raised, and an alarm can be sent to the locomotive. Pet. 39–40 (citing Ex. 1005 ¶ 24; Section X.A.1. contentions for claim 1; Ex. 1003 ¶¶ 143, 144). Petitioner asserts that LeFebvre uses heuristics to compare currently collected data to data stored in memory on a data control unit to identify trends and deviations such as changes in bearing temperatures or long term trends in bearing conditions in element 20(b). *Id.* at 40 (citing Ex. 1005 ¶ 58; Ex. 1003 ¶¶ 145, 147, 148).

b. Patent Owner's arguments

Patent Owner does not contest Petitioner's assertions that LeFebvre discloses or suggests elements 20(a) and 20(b). *See generally* PO Resp.; Sur-reply.

c. Conclusion

Based on the parties' contentions and evidence, we agree with and adopt Petitioner's undisputed analysis that LeFebvre discloses or suggests elements 20(a) and 20(b), and we determine Petitioner has established by a preponderance of evidence that claim 20 is unpatentable over LeFebvre.

15. Independent Claim 21

a. 21 Preamble: A method for monitoring the operation of a railcar comprising:

(1) Petitioner's contentions

Petitioner asserts that LeFebvre discloses 21 Preamble. Pet. 41 (citing Section X.A.12.a. contentions for 1 Preamble; Ex. 1003 ¶ 149).

(2) Patent Owner's arguments

Patent Owner does not contest Petitioner's assertions that LeFebvre discloses or suggests 21 Preamble. *See generally* PO Resp.; Sur-reply.

(3) Conclusion

Based on the parties' contentions and evidence, we agree with and adopt Petitioner's undisputed analysis that LeFebvre discloses 21 Preamble.

b. 21(a): collecting data at periodic intervals about one or more operating parameters of said railcar using one or more sensor units provided on said railcar;

(1) Petitioner's contentions

Petitioner contends that LeFebvre discloses or suggests element 21(a) for the reasons provided for element 14(a). Pet. 41 (citing Section X.A.12.b. contentions for element 14(a); Ex. 1003 ¶ 150).

(2) Patent Owner's arguments

Patent Owner does not contest Petitioner's assertions that LeFebvre discloses or suggests element 21(a). *See generally* PO Resp.; Sur-reply.

(3) Conclusion

Based on the parties' contentions and evidence, we agree with and adopt Petitioner's undisputed analysis that LeFebvre discloses or suggests element 21(a), and we determine that Petitioner has established by a preponderance of evidence that LeFebvre teaches or suggests element 21(a).

c. 21(b): communicating said collected data to a communication management unit;

(1) Petitioner's contentions

Petitioner asserts that LeFebvre discloses or suggests element 21(b), and LeFebvre's data control unit is a communication management unit. Pet. 41 (citing Section X.A.12.b. contentions for element 14(a); Ex. 1003 ¶ 151).

(2) Patent Owner's arguments

Patent Owner does not contest Petitioner's assertions that LeFebvre discloses or suggests element 21(b). *See generally* PO Resp.; Sur-reply.

(3) Conclusion

Based on the parties' contentions and evidence, we agree with and adopt Petitioner's undisputed analysis that LeFebvre discloses or suggests element 21(b), and we determine that Petitioner has established by a preponderance of evidence that LeFebvre teaches or suggests element 21(b).

d. 21(c): analyzing said collected data by applying heuristics thereto to (i) determine if an actual failure exists and (ii) to predict potential or imminent failures based on a statistical analysis of said collected data.

(1) Petitioner's contentions

Petitioner contends that LeFebvre discloses or suggests element 21(c) for the reasons provided for element 14(b). Pet. 41 (citing Section X.A.12.c. contentions for element 14(b); Ex. 1003 ¶¶ 152, 153).

(2) Patent Owner's arguments

Patent Owner argues that Petitioner does not show that LeFebvre uses heuristics to (1) determine if an actual failure exists and (2) predict potential or imminent failures based on statistical analysis as recited in element 21(c). PO Resp. 21.

(3) Analysis

For the reasons discussed in Section II.E.9.c. *supra*, in our analysis of the parties' contentions for the similar subject matter in element 14(b), we determine that LeFebvre teaches or suggests element 21(c).

(4) Conclusion

Based on the parties' contentions and evidence, we agree with and adopt Petitioner's analysis that LeFebvre discloses or suggests element 21(c), and we determine that Petitioner has established by a preponderance of evidence that LeFebvre teaches or suggests element 21(c).

e. Conclusion

We determine that Petitioner has established by a preponderance of evidence that claim 21 is unpatentable over LeFebvre.

16. Claim 22: further comprising the steps of: 22(a) assessing the collected data to determine if an alarm condition exists; 22(b) and wirelessly communicating said alarm condition to an off railcar location.

a. Petitioner's contentions

Petitioner contends that LeFebvre discloses or suggests assessing the collected data to determine if an alarm condition exists in element 22(a) for the reasons asserted in its contentions for element 16(a), and wirelessly communicating the alarm condition to an off railcar location in element 22(b) for the reasons asserted in its contentions for element 16(b). Pet. 41 (citing Sections X.A.14.a. and X.A.14.b.; Ex. 1003 ¶¶ 154, 155).

b. Patent Owner's arguments

Patent Owner does not contest Petitioner's assertions that LeFebvre discloses or suggests elements 22(a) and 22(b). *See generally* PO Resp.; Sur-reply.

c. Conclusion

Based on the parties' contentions and evidence, we agree with and adopt Petitioner's undisputed analysis that LeFebvre discloses or suggests elements 22(a) and 22(b). We determine that Petitioner has established by a preponderance of evidence that claim 22 is unpatentable over LeFebvre.

F. Ground 2: Obviousness Over LeFebvre and Barone

Petitioner asserts the unpatentability of claims 8 and 9 under 35 U.S.C. § 103(a) over LeFebvre and Barone. Pet. 42–49.

1. Barone

Barone discloses a system that collects sensor data for railcar wheels and bearings over a wireless mesh network, analyzes the data to determine if a failure is approaching, and transmits alerts to a locomotive. Ex. 1007 ¶¶42, 45, 85–88, 158, 159, 161, 201–220, Figs. 1, 2. Barone also monitors bearing temperatures, vibrations, and acoustic signatures and reports critical situations to a monitoring station. *Id.* ¶ 45. A locomotive receiver processes data from railcar sensors and reports urgent situations. *Id.* ¶¶ 87–89. Barone performs low frequency analysis, filtering, time domain analysis, and Fast Fourier Transform analysis to identify defects. *Id.* ¶¶ 158, 159, 161, 201.

2. Motivation to combine

a. Petitioner's contentions

Petitioner contends that a skilled artisan would have combined the teachings of LeFebvre and Barone to monitor the condition of railcar wheels and bearings using sensors connected over a wireless mesh network and to analyze collected data to determine if a wheel bearing failure is imminent and issue an alert to the locomotive or central station. Pet. 42–43 (citing Ex. 1007, code (57), Abstr., ¶¶ 45, 86, 201–220; Ex. 1003 ¶¶ 157–162).

b. Patent Owner's arguments

Patent Owner does not contest these assertions regarding a motivation to combine LeFebvre and Barone. *See generally* PO Resp.; Sur-reply.

c. Conclusion

We determine a skilled artisan would have combined the teachings of LeFebvre and Barone in the manner asserted by Petitioner for the reasons asserted by Petitioner (Pet. 42–49) with a reasonable expectation of success, and we agree with and adopt Petitioner's undisputed contentions.

3. Claim 8: further comprising the steps of:
a. receiving data from a plurality of railcars;
b. applying a heuristic to said received data to determine deviations from nominal operating conditions;
c. assigning a severity level to said deviations from nominal operating conditions;
d. determining an alarm condition based on said assigned severity level;
e. transmitting said raised alarm to a display unit on a train of which said plurality of railcars are a part.

a. Petitioner's contentions

Petitioner contends that LeFebvre and Barone disclose receiving data from plural railcars at a locomotive or data handling location, applying heuristics to collected data to detect serious issues for multiple railcars, and displaying alarms. Pet. 43–49 (citing Ex. 1005 ¶¶ 3, 38, 52, 61, 95, claim 23; Ex. 1007 ¶¶ 37–42, 45, 87–89, 269; Section X.A.6., X.A.1.c., X.A.1.d., and X.A.1.e. contentions for claim 6 and elements 1(b)–1(d); Ex. 1010 2:24–34; Ex. 1003 ¶¶ 165–178).

b. Patent Owner's arguments

Patent Owner argues that LeFebvre fails to teach or suggest elements 1(b)–1(d), and Barone does not cure those deficiencies. PO Resp. 21–22.

c. Analysis

Because we determine that claim 1 is unpatentable over LeFebvre as discussed in Section II.E.2. *supra*, we disagree that claim 8 has not been shown to be unpatentable due to alleged deficiencies in claim 1 in Ground 1.

d. Conclusion

Based on the parties' contentions and evidence, we agree with and adopt Petitioner's analysis that LeFebvre and Barone disclose or suggest elements 8(a)–8(e), and Petitioner has established by a preponderance of evidence that claim 8 is unpatentable over LeFebvre and Barone.

4. Claim 9: further comprising the steps of
a. determining a recommended course of action based on said alarm condition; and
b. transmitting said recommended course of action to a display unit on a train of which said railcar is a part.

a. Petitioner's contentions

Petitioner asserts that LeFebvre and Barone determine recommended remedial action as recited in element 9(a) and transmit alarms with the recommended action based on the alarm condition as recited in element 9(b). Pet. 48–49 (citing Ex. 1005 ¶¶ 59–61, 64; Ex. 1007 ¶¶ 36, 191; Section X.B.1.d. contentions for element 8(e); Ex. 1003 ¶¶ 180–183).

b. Patent Owner's arguments

Patent Owner argues that LeFebvre fails to teach or suggest elements 1(b)–1(d), and Barone does not cure those deficiencies. PO Resp. 21–22.

c. Analysis

Because we determine that claim 1 is unpatentable over LeFebvre as discussed in Section II.E.2. *supra*, we disagree that claim 9 has not been shown to be unpatentable due to alleged deficiencies in claim 1 in Ground 1.

d. Conclusion

We determine that Petitioner has established by a preponderance of evidence that claim 9 is unpatentable over LeFebvre and Barone.

G. Ground 3: Obviousness Based on Armitage

Petitioner asserts that claims 1, 2, 4, 6–11, and 13 are unpatentable under 35 U.S.C. § 103(a) over Armitage. Pet. 50–69. We determine, for the reasons below, that Armitage is not prior art to the ’673 patent.

1. Armitage

Armitage was published on November 17, 2011, from Application No. 13/105,293, filed on May 11, 2011, claiming priority from Provisional Application No. 61,333,428, filed May 11, 2010. Ex. 1006, codes (21), (22), (43), (60).

a. Alleged conception prior to May 11, 2010

(1) Patent Owner’s arguments

Patent Owner argues that “the Amsted inventors had a definite and permanent idea of the complete invention set forth the ’673 Patent as it was intended to be applied in practice, evidenced in a presentation emailed from Andrew Martin SCT Logistics on April 4 [2010].” PO Resp. 26 (citing Ex. 2020; Ex. 2013 (Declaration of Andrew Martin (inventor)) ¶ 12).

(2) Petitioner’s contentions

Petitioner asserts that Patent Owner’s Response lacks a claim chart, table, or argument that addresses the language of any challenged claim. Reply 14. Petitioner asserts that it contains a conclusory statement that the Challenged Claims were conceived prior to May 2010 and cites declarations of Dr. Stamos (Ex. 2010) and Andrew Martin (Ex. 2013) that fail to address the claim language or provide a claim-by-claim analysis. *Id.* at 14–15.

(3) Analysis

(a) Claim 1

We determine Patent Owner has shown that, prior to May 11, 2010, the inventors conceived of a system that continuously monitors bearing temperatures using wireless sensor nodes positioned on bearing adapters and applies heuristics to sensor data at communications management units to determine deviations from nominal operating conditions, assign severity levels, and determine an alarm condition as recited in claim 1. PO Resp. 24–29; Sur-reply 9–11; Ex. 2013 ¶¶ 10 (March 21, 2010 presentation of new condition monitoring system using wireless sensor nodes (WSNs) attached to bearing sidewalls and IONX Series 3 communication management units (CMUs)), 11 (revised alarm stages use tiered alerts based on severity levels), 12 (April 4, 2010 presentation with overview of system of sensor motes attached to bearing adapter to communicate with IONX receiver on a railcar and display messages in a cab with an alert type based on a heuristic of ambient temperature level compared to a bearing temperature and Stage 1–4 alert stages), 14 (temperature thresholds for Stage 1–4 alerts sent in April 6, 2020 email (Ex. 2023)), 16 (different temperature thresholds for Stage 1–4 alerts sent in April 8, 2010 email (Ex. 2022)); Ex. 2017 (March 21, 2010 presentation (per Ex. 2018 metadata) 2 (condition monitoring), 5 (Series 3 CMU and WSNs mounted on freight car to communicate sensor data to off-railcar locations), 8 (smart pad sensors mounted on bearing adapter and IONX tracker unit/wireless manager), 9 (IONX Series 3 CMU forms wireless mesh network of WSNs). Comparing bearing temperatures sensed at bearing adapters to ambient temperature thresholds applies a heuristic to data as claimed under our interpretation. Section II.B.1.; *see* PO Resp. 28.

(b) Claim 10

We determine that Patent Owner has established that the inventors conceived of a method that senses the temperature of a part of a railcar other than the desired part (i.e., a bearing adapter) to determine the temperature of the desired part (wheel bearing), determine if the temperature of the bearing is outside an acceptable range of temperatures (Stage 1–4 temperatures), and transmit an alarm to a display in a locomotive. PO Resp. 24–29; Ex. 2013 ¶¶ 12 (display of bearing temperature outside ambient temperature range), 14 (temperature ranges of Stages 1–4), 16 (same).

(c) Claim 14

We determine that Patent Owner has established that the inventors conceived of a system that uses a communication management unit to wirelessly receive data from sensing units that periodically collect readings from sensors on the railcar, heuristically analyze received data to determine actual failures and potential/imminent failures using statistical analysis, and communicate results to an off-railcar location in claim 14 as discussed for claim 1 and in PO Resp. 28 (asserting Ex. 2013 ¶ 12 shows "a cab display indicating messages determined from applying heuristics to the received data"); Sur-reply 9–11, 21–22; Ex. 2013 ¶ 18 (shows field trials of bearing temperature motes by SCT Logistics in April 2010); Ex. 2146, 8 (sample data every minute); Ex. 2147, 14 (sample data at one-minute intervals during SCT field test); Ex. 2047, 5 (IONX Glossary describes a proprietary power management "wake/sleep" mode that minimizes the draw on the batteries when CMU wakes to get information from sensors); Ex. 2020 (Apr. 1, 2010 email with revised alarm levels that include Stage 1 Bearing Trending that is applied to trending recommendations and repeat offender identifications).

Petitioner asserts that LeFebvre applies heuristics to the data collected from sensor units to predict potential or imminent failures using statistical analysis of "long term trends" in wheel bearing temperatures. Pet. 36–37. Patent Owner describes similar analysis of bearing temperature trends and repeat offenders, which provides a statistical analysis. Ex. 2020.

(d) Claim 21

We determine that Patent Owner has established that the inventors conceived of a method that collects data at periodic intervals for operating parameters of the railcar using sensor units, communicates the data to a CMU, and analyzes the data by applying heuristics to determine an actual failure and predict potential/imminent failures based on statistical analysis (claim 21) for the reasons discussed for claim 14.

(e) Claims 2–9 and 13

We determine that Patent Owner has established that the inventors conceived of a method that establishes wireless communication with remote sensing units (claim 2) in a mesh network (claim 3), steps a–d of claim 1 are executed by a processing unit (CMU) on the railcar (claim 4), the CMU is part of the mesh network (claim 5), an alarm condition is transmitted to a location remote from the railcar (locomotive) (claim 6), data is transmitted to a location remote from the railcar (locomotive) (claim 7), receiving data from plural railcars, applying heuristics, assigning a severity level to determine an alarm condition, and transmitting an alarm to a display unit on a train (claim 8), determining a recommended course of action to send to a display unit on a train (claim 9), and different event engines (claim 13). PO Resp. 24–29; Sur-reply 11–14; Ex. 2013 ¶¶ 8, 10–12, 14, 16; Ex. 2017, 3, 5, 8, 9; Ex. 2020; Ex. 2031, 3 (WSN and CMU alerts); Ex. 2047; Ex. 2050 4–5.

Ex. 2031 describes WSN Absolute Bearing Temp and CMU Above Ambient/Axle Differential *Inference* alerts indicating sensors (WSNs) and CMUs apply heuristics to assign severity levels. *See* Sur-reply 15–16 (using sensors to monitor railcar performance); Ex. 2010, App. B 3–4 (element 1b); Ex. 2013 ¶ 18 (calibrating sensors with updated temperature algorithms and settings); Ex. 2050 4–5 (using improved CMU predictive algorithms and alarms), 11 (transmit data to central office when useful data is found), 18 (discuss a need to improve alarms and predictive algorithms on the CMU).

(f) Claims 11 and 12

We determine that Patent Owner has established that the inventors conceived of a method that determines the ambient air temperature to use in heuristics (claim 11) and performs steps 1a–1d at a single unit attached to a railcar (claim 12). PO Resp. 24–29; Sur-reply 15; Ex. 2013 ¶¶ 12, 14, 16.

(g) Claims 15–20

We determine that Patent Owner has established that the inventors conceived of a method wherein sensing units determine an alarm condition and wirelessly send notice of the alarm condition to a CMU that sends the alarm condition to an off-railcar location (locomotive display) (claim 15), an alarm condition is determined based on data received from two or more sensing units (a bearing and ambient temperature alarm) and communicated to an off-railcar location (claim 16), placing a sensing unit(s) in a stand-by state where it does not read data from sensors or transmit data (claim 17), joining a mesh network of sensing units (claim 18), and saving data to compare to identify trends and deviations (claim 20). PO Resp. 24–29; Sur-reply 17–18; Ex. 2013 ¶¶ 11–18; Ex. 2020 (Stage 1 Bearing Trending applied to trending recommendations and repeat offender identifications).

We do not find evidence of conception of joining a mesh network of CMUs as recited in claim 19. *See* PO Resp. 24–29; Sur-reply 18. Evidence of sensor units forming a mesh network on a single railcar with a CMU in Exhibit 2017 (page 9) does not describe a mesh network being forming with CMUs located on other railcars. However, claim 19 is not one of the Challenged Claims in this proceeding. *See* Pet. 5.

(h) Claim 22

We determine that Patent Owner has established that the inventors conceived of a method that assesses collected data to determine if an alarm condition exists and wirelessly communicates the alarm condition to an off railcar location. PO Resp. 24–29; Sur-reply 19; Ex. 2013 ¶¶ 11–16.

(4) Conclusion

We determine that Patent Owner has demonstrated that the inventors conceived of the invention of claims 1–18 and 20–22 before May 11, 2010.

b. Alleged reduction to practice

(1) Patent Owner's contentions

Patent Owner asserts that "[b]y August 2, 2011, the invention claimed in the '673 Patent was reduced to practice." PO Resp. 45. Patent Owner provides a detailed account of research, development, and testing conducted by the inventors to reduce the invention to practice with reasonable diligence between April 2010 and August 2011. *Id.* at 31–47.

(2) Petitioner's arguments

Petitioner argues that all of the development work involved a system for monitoring bearing temperature, and Patent Owner must show that it completed an invention commensurate with the invention in Armitage and the much broader invention claimed in the '673 patent. Reply 22.

(3) Analysis

To establish an actual reduction to practice, Patent Owner must show that it made an embodiment or performed a process that met all limitations of the claimed invention and determined that the invention would work for its intended purpose. *In re Steed*, 802 F.3d 1311, 1318 (Fed. Cir. 2015); *Cooper v. Goldfarb*, 154 F.3d 1321, 1327 (Fed. Cir. 1998).

We determine that Patent Owner established a reduction to practice of a temperature monitoring system that meets all limitations of claims 1–18 and 20–22 with reasonable diligence from (a) the inventors' conception of that invention in April 2010 (before Armitage's earliest filing date of May 11, 2010 (Ex. 1006, codes (21), (60)) to (b) the actual reduction to practice of that invention by August 2011. PO Resp. 30–47; Sur-reply 23–24.

Petitioner does not dispute that this temperature monitoring system meets the limitations of claims 1–18 and 20–22 but argues that "[t]here is no evidence that the inventors conceived of embodiments comprising different types of sensors." Reply 22–23. Patent Owner's conception and reduction to practice of a temperature monitoring system, however, need not antedate Armitage's description of other monitoring systems. The holding in *Mylan Pharma. Inc. v. Merck Sharp & Dohme Corp.*, 50 F.4th 147, 154–155 (Fed. Cir. 2022) is inapposite because in that case the prior art did not disclose *any* embodiment within the scope of the claims.

(4) Conclusion

We determine that Patent Owner has demonstrated that the inventors reduced to practice an embodiment that met all limitations of claims 1–18 and 20–22 with reasonable diligence from their conception in April 2010, before Armitage's earliest filing date of May 11, 2010, until August 2011.

c. Conclusion

Armitage is not prior art to the Challenged Claims.

H. Patent Owner's Revised Motion to Amend

Patent Owner filed a Revised Motion to Amend ("RMTA") original challenged claims 1–18 and 20–22 contingent on a finding of unpatentability of any of those claims. RMTA 1.

1. Proposal of a reasonable number of substitute claims

Patent Owner proposes a reasonable number of substitute claims. Patent Owner proposes a one-to-one substitution of substitute claims 23–43 for original claims 1–18 and 20–22. RMTA 1, 2–3; App. A. Petitioner does not argue otherwise. *See generally* Opp. RMTA; Sur-reply RMTA.

2. Amendments responsive to a ground of unpatentability

The amendments respond to the grounds of unpatentability involved in this proceeding. *See* RMTA § VI. Petitioner does not argue otherwise. *See generally* Opp. RMTA; Sur-reply RMTA.

3. No enlargement of the scope of the claims

The amendments do not enlarge the scope of the claims but include narrowing limitations to the original claims. *See* RMTA App. A. Petitioner does not argue otherwise. *See generally* Opp. RMTA; Sur-reply RMTA.

4. Introduction of new matter

a. Claim 23: "one or more sensing units, each mounted on a sidewall of a bearing adapter"

(1) Petitioner's contentions

Petitioner asserts that the '673 patent discloses the sensing units can be any sensor but does not specify where to mount sensing units other than a temperature sensor. Opp. RMTA 2–3. Petitioner argues that other sensors would serve no purpose if mounted on a bearing adapter sidewall. *Id.* at 3.

Petitioner asserts that the table spanning columns 7–12 of the ’673 patent describes two examples of an adapter mounted accelerometer but “neither example states that the accelerometer is mounted specifically to the ***sidewall*** of a bearing adapter as expressly required by the claim [substitute claim 23].” Opp. RMTA 3.

(2) Patent Owner’s arguments

Patent Owner argues that the absence of embodiments described in the specification of the exact configuration claimed does not preclude written description when a skilled artisan would reasonably conclude based on the patent’s disclosures and the knowledge of a person skilled in the art that the applicant possessed the claimed limitation. RMTA 2. Patent Owner argues

> the ’673 Patent ***does*** disclose an adapter mounted sensor unit and the sidewall is the ***only*** adapter mounting location expressly disclosed in the specification. *See* EX1001, Fig. 3, 4:48-56, 5:10-18; 5:23-35; 5:42-59, 8:16-19, Table spanning cols. 7-12; EX2164, ¶13; EX2163, ¶¶21-22; RMTA, 8-9. Figures 3 and 3A, when viewed on their own, do not in any way limit the sensor device to only a temperature sensor.

Id. at 3.

(3) Analysis

The parties agree that the ’673 patent describes temperature sensing mote 10 mounted to bearing adapter 12. *See* RMTA 6; Opp. RMTA 3. Temperature sensing mote 10 includes temperature sensor 20a thermally coupled to thermal transfer brass plug 22 that extends through housing 14 to be in thermal communication with bearing adapter 12. Ex. 1001, 4:35–48, 5:43–53. Alternatively, temperature sensors are mounted on railcar body 38 and tank car 38 as discussed in Section I.C. *supra* to measure ambient and liquid temperatures at those locations. *Id.* at 5:43–57, 6:55–61, Figs. 4, 5B.

The ’673 patent indicates that “[s]ensor 20 can be any type of sensor, including for example, a temperature sensor, a pressure sensor, a load cell, a strain gauge, a hall effect sensor, a vibration sensor, an accelerometer, a gyroscope, a displacement sensor, an inductive sensor, a piezo resistive microphone or an ultrasonic sensor.” Ex. 1001, 4:51–56. The ’673 patent explains that “one of ordinary skill would recognize the configuration of the motes 10 with respect to the sensor 20 is dependent upon the type of sensor and the type of data desired.” *Id.* at 4:48–51. Sensor configurations depend on the type of sensor and the data measured. *See* Tr. 13:22–15:19.

Patent Owner provides no evidence that a skilled artisan would mount an accelerometer “on a sidewall of a bearing adapter” to measure a condition of a bearing proximate to the bearing adapter just because a temperature sensor is mounted there in some embodiments to place heat transfer element 22 in thermal communication with the bearing adapter sidewall. We have no evidence that mounting a temperature sensor to a bearing adapter sidewall to measure temperatures describes mounting accelerometers there to measure various forces and loads rather than bearing temperatures.

Mr. Ricca testifies that a skilled artisan would understand that strain gauges, gyroscopes, reed switches, and limit switches would not work if they are mounted on a bearing adapter sidewall. Ex. 1035 ¶ 35. We agree with Petitioner that LeFebvre (Ex. 1005) teaches to mount temperature and load sensors to “the upper rectangular surface of the bearing adapter.” Opp. RMTA (citing Ex. 1005 ¶ 20). LeFebvre discloses sensor pads 16 mounted to a top surface of bearing adapter 4 to measure dynamic and static vertical loads and shear or lateral forces on bearings, axles, and railcars. Ex. 1005 ¶¶ 19, 20, 33, Fig. 4; Tr. 13:2–15:23.

The portions of the ’673 patent cited by Patent Owner do not address this issue either. Reply RMTA 3. The first citation explains that a skilled artisan would recognize that the configuration of motes depends upon the type of sensor and type of data desired for the different sensors listed there. Ex. 1001, 4:48–56. Further citations describe circuitry 26 of temperature sensor mote 10. *Id.* at 5:10–18, 5:23–35. Other citations emphasize that the temperature sensing mote is attached to ensure good heat transfer to it. *Id.* at 5:42–59. The ’673 patent indicates that the temperature sensor is calibrated so the temperature reading of the bearing adapter is indicative of the bearing temperature. *Id.* at 5:59–62. These portions do not describe placing other sensors such as accelerometers on a sidewall of a bearing adapter as recited in claim 23. *Ariad Pharma, Inc. v. Eli Lilly and Co.*, 598 F.3d 1336, 1352 (Fed. Cir. 2010) (explaining that a description that merely renders a claimed invention obvious does not satisfy the written description requirement).

(4) Conclusion

Based on the parties’ contentions and evidence, we find that Patent Owner has not shown that there is sufficient written description of “one or more sensing units, each mounted on a sidewall of a bearing adapter” as recited in substitute claim 23.

b. Claim 23: “a plurality of defined severity levels that are each assignable based on respective possible values for a magnitude of the deviations of one or more numeric values from nominal operating conditions for the bearing during operation of the railcar”

(1) Petitioner’s contentions

Petitioner argues that no criteria are used to define the tiered alarm level or alarm levels assignable using such criteria. Opp. RMTA 5.

Petitioner also contends that plotting a Fast Fourier Transform on data sets does not assign severity levels. Opp. RMTA 5–6.

(2) Patent Owner's arguments

Patent Owner argues that the Table spanning columns 7–12 describes a "Bearing Fault Indicator" that measures relative amplification that a skilled artisan would understand discloses a severity level based on a magnitude of the deviation of one or more numeric values from nominal operating conditions for the bearing during operation. Reply RMTA 10–11.

(3) Analysis

We agree with Petitioner that none of the portions cited by Patent Owner provides a written description of a plurality of defined severity levels assignable based on respective possible values for a magnitude of deviations of one or more numeric values from nominal operating conditions for the bearing as recited in substitute claim 23.

As discussed in Section II.E.2.d. for element 1(c) in Ground 1, and our interpretation of severity levels in Section II.B.3. *supra*, the '673 patent describes different severity levels of alarms as different bearing faults that require different actions. Ex. 1001, 13:30–14:3. The inventors conceived of severity levels based on different bearing temperatures representing different magnitudes of deviation from nominal operation conditions as shown below, but they did not disclose these severity level values in the '673 patent:

> Stage 1 – 93°C (~200F) --- this alarm would not be displayed, but I am tracking these.
> Stage 2 – 124°C (~255F) --- this is the axle differential alarm, which is any bearing that is 41°C hotter than is axle mate
> Stage 3 – 136°C (~276F) --- this is the above ambient alarm, which is any bearing that is 190F (105°C) above ambient.
> Stage 4 – 160°C (~320F) --- this is the absolute alarm.

Ex. 2013 ¶ 14 ("The critical temperature for a bearing is around 110ºC, which is approximately the drop point of the grease."); *id.* ¶ 16 (describing temperatures of >200ºF for Stage 1, >105ºF for Stage 2, >190ºF for Stage 3, and >320ºF for Stage 4 Alarms); Ex. 2050 11 (default value 5.5 ºC), 14. *None of these values are disclosed in the '673 patent for Stage 1–4 alarms*.

Because no severity levels based on a magnitude of deviations of bearing temperatures from nominal operating conditions are disclosed in the '673 patent, Patent Owner has not demonstrated written description support for this limitation. Opp. RMTA 6–7; *see* Reply RMTA 5–6.

(4) Conclusion

Based on the parties' contentions and evidence, we find that Patent Owner has not demonstrated that the '673 patent provides sufficient written description for "a plurality of defined severity levels that are each assignable based on respective possible values for a magnitude of the deviations of one or more numeric values from nominal operating conditions for the bearing during operation of the railcar" as recited in claim 23.

c. Claims 27, 28, 30, and 31: "accelerometer"/ "acceleration data"

(1) Petitioner's contentions

Petitioner argues that claims 27, 28, 30, and 31 depend from claim 23 and also lack written description support for mounting an accelerometer on the sidewall of a bearing adapter as recited in claim 23. Opp. RMTA 7–8.

(2) Patent Owner's arguments

Patent Owner argues that the original claims 17 and 23 of the '673 patent's parent application recite a sensor mounted on a railcar having an accelerometer. Reply 6–7.

(3) Analysis

As discussed in Section II.H.4.a. *supra*, Patent Owner has not shown written description support for mounting accelerometers on a sidewall of a bearing adapter as recited in claim 23 from which claims 27, 28, 30, and 31 depend. Mounting a temperature sensor on *a railcar* (Ex. 1001, 5:64–67, Fig. 4) does not describe amounting an accelerometer on a *sidewall of a bearing adapter*. *See* Reply RMTA 6–7; Ex. 2004, 31–32; Ex. 1002, 43–44.

(4) Conclusion

Based on the parties' contentions and evidence, we find that Patent Owner has not set forth sufficient written description support for the claimed accelerometer and acceleration data in claims 27, 28, 30, and 31.

d. Claim 33: temperatures, temperature values

(1) Petitioner's contentions

Petitioner asserts that there is no written description of "a plurality of temperature values for the desired part" or "a plurality of temperatures that are expected for the part during standard operations of the railcar" as recited in element 33(b), "at least one defined temperature value associated with the desired part" in element 33(c), or how a "defined temperature value" relates to "an acceptable range of temperatures" or "a predetermined reference temperature value" in elements 33(c) and 33(d). Opp. RMTA 9–10.

(2) Patent Owner's arguments

Patent Owner argues that a skilled artisan would understand there are descriptions of temperature thresholds that define ranges. Reply RMTA 9. Patent Owner asserts that a series of escalating thresholds produces a range. *Id.* Patent Owner asserts that the specification reasonably conveys to a skilled artisan that the inventors possessed this subject matter. *Id.*

(3) Analysis

The ’673 patent describes calibrating temperatures read at a bearing adapter to a bearing’s temperature. Ex. 1001, 5:59–6:4. Patent Owner has not identified a description of “calibrated correlations between a plurality of temperature values for the desired part and a plurality of temperatures that are expected for the part during operations of the railcar.” Temperatures of bearings are compared to ambient temperatures and temperatures of other bearings, but those temperatures vary. They are not *expected* during normal operation. *Id.* at 13:9–67. Critical Alarms are unexpected temperatures that indicate a bearing *failure* requiring a train to stop. *Id.* at 14:1–3.

Nor has Patent Owner identified any description of determining the temperature of a part “is within one of a plurality of severity levels defined by a deviation of said temperature from a predetermined reference temperature value” in element 33(d). Stage 1–4 Alarm Levels are different bearing faults rather than severity levels defined by deviations of bearing temperatures from a predetermined reference temperature value. Ex. 1001, 13:30–14:3. As discussed in Section II.I.4.b. *supra*, the inventors did not disclose the following temperature reference values and severity levels:

> Stage 1 – 93°C (~200F) --- this alarm would not be displayed, but I am tracking these.
> Stage 2 – 124°C (~255F) --- this is the axle differential alarm, which is any bearing that is 41°C hotter than is axle mate
> Stage 3 – 136°C (~276F) --- this is the above ambient alarm, which is any bearing that is 190F (105°C) above ambient.
> Stage 4 – 160°C (~320F) --- this is the absolute alarm.

Ex. 2013 ¶¶ 14 (critical temperature is 110ºC); 16 (Stage 1 is >200ºF, Stage 2 is >105ºF axle differential, Stage 3 is >190ºF above ambient, Stage 4 is >320ºF).

(4) Conclusion

Based on the parties' contentions and evidence, we find that Patent Owner has not identified sufficient written description support for claim 33.

e. Claims 36: "on a sidewall of a bearing adapter," "a plurality of possible values indicative of the condition of the bearing"

(1) Petitioner's contentions

Petitioner contends that written description support is lacking for "on a sidewall of a bearing adapter" for the reasons discussed in Section I.A. for the same terms in claim 23. Opp. RMTA 11. Petitioner asserts that there is no written description support for "a plurality of possible values indicative of the condition of the bearing" for the same reasons discussed for numeric values in Section I.C. for claim 23. *Id.* at 11–12.

(2) Patent Owner's arguments

Patent Owner incorporates its arguments in Sections I.B.1.for claim 23 and Section I.B.4. for claims 27, 28, 30, and 31. Reply RMTA 10.

(3) Analysis

As discussed in Section II.H.4.a. *supra*, for claim 23, we find there is inadequate written description support for sensors disposed "on a sidewall of a bearing adapter." As discussed in Section II.H.4.b. *supra*, for claim 23, we find there is inadequate written description of "a plurality of possible values indicative of the condition of the bearing." *See* Ex. 2013 ¶¶ 14, 16.

(4) Conclusion

Based on the parties' contentions and evidence, we find that Patent Owner has not set forth sufficient written description support for sensors disposed "on a sidewall of a bearing adapter" and "a plurality of possible values indicative of the condition of the bearing" in claim 36.

f. Claim 42: "on a sidewall of a bearing adapter," "three of more defined severity levels based on the one or more numeric values"

(1) Petitioner's contentions

Petitioner contends that written description support is lacking for "on a sidewall of a bearing adapter" for the reasons discussed in Section I.A. for the same terms in claim 23. Opp. RMTA 12. Petitioner asserts that there is no written description support for "three or more defined severity levels based on the one or more numeric values" for the same reasons discussed in Sections I.B. and I.C. for claim 23. *Id.*

(2) Patent Owner's arguments

Patent Owner argues that antecedent basis has been provided by the Corrected Claim Appendix in Exhibit 2165. Reply RMTA 11.

(3) Analysis

As discussed in Section II.H.4.a. *supra*, for claim 23, we find that there is inadequate written description support for sensors disposed "on a sidewall of a bearing adapter." As discussed in Sections II.H.4.b. *supra* for claim 23, we find inadequate written description support for "three of more defined severity levels based on the one or more numeric values."

(4) Conclusion

Based on the parties' contentions and evidence, we find that Patent Owner has not set forth sufficient written description support for sensors disposed "on a sidewall of a bearing adapter" and "three of more defined severity levels based on the one or more numeric values" in claim 42.

g. Conclusion

We determine that substitute independent claims 23, 33, 36, and 42 lack written description support for one or more limitations discussed above.

5. Indefiniteness

a. Claim 33: "temperatures"/"temperature value(s)"

(1) Petitioner's contentions

Petitioner contends that "claim 33 includes a multiplicity of terms relating to [']temperatures' and 'temperature value(s)' that do not appear in the specification, and it is not clear what each term represents or how the terms relate to one another." Opp. RMTA 12.

(2) Patent Owner's arguments

Patent Owner argues, "there are ample disclosures in the specification that provide written description support for these claim terms and it is of no moment that the terms are not used *in haec verba* in the specification." Reply RMTA 10–11.

(3) Analysis

Element 33(b) determines the temperature of the desired part by using the temperature sensed of a part other than the desired part "and calibrated correlations between a plurality of temperature values for the desired part and a plurality of temperatures that are expected for the part during standard operations of the railcar." The '673 patent describes correlating (calibrating) electrical circuitry 26 of a sensor mote 10 "so that the temperature reading [of the bearing adapter] is indicative of the bearing temperature." Ex. 1001, 5:59–62. The calibration "takes into account the temperature of the bearing adapter at the point measured (see FIG. 3*a*), the ambient temperature as measured by the second temperature sensor mote mounted elsewhere on the rail car so as to sense ambient temperature (see FIG. 4), and information about the type of bearing adapter." *Id.* at 5:62–6:1. It does not correlate temperatures of a part to temperatures expected during normal operations.

It is unclear how the temperature of the desired part can be determined based on the temperature of another part without calibrating temperatures of the other part to temperatures of the desired part as the '673 patent describes. Ex. 1001, 5:55–6:4. It is unclear how temperatures of a bearing can be determined by calibrating bearing temperatures to temperatures expected for a bearing during normal operations as recited in element 33(b). *See id.*

Because Alarm Stages 2–4 are deviations from different temperature values (axle mate bearing temperature and ambient temperature) that are not predetermined but vary with axle and ambient temperatures, it is unclear how the temperature of a bearing (desired part) can be within one of a plurality of severity levels defined by a deviation of a bearing temperature "from ***a*** predetermined reference temperature value" in element 33(d). Ex. 1001, 13:30–14:3. It also is unclear if the "at least one defined temperature value associated with the desired part" in element 33(c) is the temperature of an axle mate bearing for Stage 2 alarms and ambient temperature for Stage 3 alarms, which temperature values vary with conditions, or the defined temperature value is some predetermined value for each of those stages as was withheld by the inventors. *Id.* at 13:37–51; *see* Ex. 2013 ¶¶ 14, 16.

(4) Conclusion

We determine that the above-described lack of clarity in the meaning of claim 33 renders that claim indefinite.

b. Claims 33 and 42: lack of antecedent basis

Petitioner's arguments regarding a lack of antecedent basis for "alarm condition" in element 33(c) and "the one or more numeric values" in claim 42 are obviated by Patent Owner's amendments. Opp. RMTA 13; Reply RMTA 11; Ex. 2165.

6. Enablement

a. Petitioner's contentions

Petitioner asserts that claim 23 encompasses any heuristic but the '673 patent does not provide any teachings to enable methods of monitoring acceleration as required by claims 27, 28, 30, and 31. Opp. RMTA 14.

b. Patent Owner's arguments

Patent Owner argues that the '673 patent specification describes numerous heuristics that a skilled artisan would be able to implement to practice the claimed invention without undue experimentation to measure temperature, vibration, and acceleration. Reply RMTA 12–13.

c. Analysis

"[T]he specification must enable the full scope of the invention as defined by its claims. The more one claims, the more one must enable." *Amgen Inc. v. Sanofi*, 598 U.S. 594, 610 (2023). Factors to consider in determining whether a claim is enabled include:

> (1) the quantity of experimentation necessary, (2) the amount of direction or guidance presented, (3) the presence or absence of working examples, (4) the nature of the invention, (5) the state of the prior art, (6) the relative skill of those in the art, (7) the predictability or unpredictability of the art, and (8) the breadth of the claims.

In re Wands, 858 F.2d 731, 737 (Fed. Cir. 1988). Petitioner does not apply any *Wands* factors to establish that a skilled artisan would be unable to make and use substitute claims 23–43 without undue experimentation.

d. Conclusion

We determine that Petitioner has not established by a preponderance of evidence that claims 23–43 are unpatentable for lack of enablement.

7. Invalidity under 35 U.S.C. § 101

a. Alice Step 1: Revised Guidance, Step 2A, Prong One

(1) Petitioner's contentions

Petitioner contends that substitute claims 23–43 recite an abstract idea of performing mathematical calculations on data collected using generic, conventional components commonly used in the railcar industry such as "sensing units," "a bearing adapter," and "a bearing proximate to the bearing adapter" and reporting the results of the calculations. Opp. RMTA 33–34. Petitioner contends that the steps 23(b)–23(d) can be performed by a human. *Id.* at 33. Petitioner asserts that claims 24–43 recite the same abstract concepts. *Id.* at 34.

(2) Patent Owner's arguments

Patent Owner argues that "the claims are directed to patentable subject matter [and] Petitioner offers little of consequence in opposition beyond conclusory statements." Reply RMTA 17.

(3) Analysis

We determine that the focus of the claimed advance over the prior art is collecting data about operational characteristics of a railcar bearing using generic sensing units, analyzing that data using mathematical concepts to determine deviations from nominal operating conditions, and assigning a severity level and alarm condition. A claim to collecting information and analyzing that information by mathematical algorithms or mental steps, without more, is an abstract idea. *E.g.*, *In re Killian*, 45 F.4th 1373, 1380 (Fed. Cir. 2022); *Elec. Power Grp., LLC v Alstom S.A.*, 830 F.3d 1350, 1351–52, 1353–54 (Fed. Cir. 2016); 2019 Revised Patent Subject Matter Eligibility Guidance, 84 Fed. Reg. 50 (Jan. 7, 2019) ("Revised Guidance").

The ’673 patent specification reflects this focus on gathering data for various operating parameters and conditions from remote sensors on railcars and applying heuristics to analyze the data to detect and predict operational failures. Ex. 1001, 1:16–22. According to the ’673 patent, current systems lack the ability to apply heuristics to data gathered from more than one sensor at multiple levels (individual sensor, railcar, and train levels) or detect operational deviations or trends that show deviations from nominal operating parameters and communicate this data wirelessly to a central data gathering facility. *Id.* at 2:3–14. The ’673 patent’s title “System and Method for Monitoring Railcar Performance” evidences this focus. *Id.* at code (54).

Claim 23 recites a method of monitoring operational characteristics of a railcar by receiving data from sensing units mounted on a sidewall of a bearing adapter to monitor a condition of a bearing, applying a heuristic to the data to correlate numeric values derived from the data to the condition of the bearing, assigning a severity level to the deviations, and determining an alarm condition based on the assigned severity level. RMTA App. A, i–ii.

Claim 33 recites a method of monitoring a temperature of a railcar part based on the temperature of another part by calibrated correlations and temperature values, determining if the temperature is outside an acceptable range by comparing temperatures and values, and transmitting an alarm if the temperature is outside the acceptable range. RMTA, App. A, iv–v.

Claim 36 recites a method of heuristically analyzing data received from sensing units to determine a bearing condition based on correlations, determine an actual failure or predict a potential, or imminent failure using statistical analysis, and assign a severity level and alarm condition. RMTA, App. A, v–vi.

Claim 42 recites a method of monitoring railcar operations by collecting data at periodic intervals using sensor units, communicating the data to a communication management unit, analyzing the collected data by applying heuristics, assigning a severity level to the bearing condition, and determining an alarm condition and action to take. RMTA, App. A, vii–viii.

Dependent claims 24–32, 34, 35, 37–41, and 43 recite other aspects of the data collection, analysis, and transmission using generic components such as an "event engine" to perform steps 23 (a)–(d), establishing wireless communications with remote sensing units, forming a mesh network, receiving data from an accelerometer in a sensing unit, a processing unit on a railcar is part of a mesh network, and transmitting the alarm to a location remote from the railcar, receiving acceleration data, determining a recommended action, determining ambient air temperature, placing sensing units in a stand-by state, and saving data. RMTA, App. A.

The '673 patent describes heuristics as mathematical calculations and formulas used to process data by correlating temperatures, measuring and converting displacements and relative positions, estimating temperatures using conduction/convection laws, using Fast Fourier Transforms (FFTs) and mathematical calculations on data, converting acceleration to speed, computing a probability density function, using heat conduction equations to convert surface temperature to fluid temperature or pressure, correlating displacement to force, computing a probability density function and kurtosis, using algorithms and FFT, correlating temperatures, and measuring angles and tilt. Ex. 1001, cols. 8–12. Temperatures are compared to values and thresholds, and averages and standard deviations are calculated and compared to identify trends and deviations. *Id.* at 12:48–15:46.

Electric Power reviewed similar claims to data collection, analysis, and reporting of results shown by claim 12, which is reproduced below.

> 12. A method of detecting events on an interconnected electric power grid in real time over a wide area and automatically analyzing the events on the interconnected electric power grid, the method comprising:
>
> receiving a plurality of data streams, each of the data streams comprising sub-second, time stamped synchronized phasor measurements wherein the measurements in each stream are collected in real time at geographically distinct points over the wide area of the interconnected electric power grid, the wide area comprising at least two elements from among control areas, transmission companies, utilities, regional reliability coordinators, and reliability jurisdictions;
>
> receiving data from other power system data sources, the other power system data sources comprising at least one of transmission maps, power plant locations, EMS/SCADA systems;
>
> receiving data from a plurality of non-grid data sources;
>
> detecting and analyzing events in real-time from the plurality of data streams from the wide area based on at least one of limits, sensitivities and rates of change for one or more measurements from the data streams and dynamic stability metrics derived from analysis of the measurements from the data streams including at least one of frequency instability, voltages, power flows, phase angles, damping, and oscillation modes, derived from the phasor measurements and the other power system data sources in which the metrics are indicative of events, grid stress, and/or grid instability, over the wide area;
>
> displaying the event analysis results and diagnoses of events and associated ones of the metrics from different categories of data and the derived metrics in visuals, tables, charts, or combinations thereof, the data comprising at least one of monitoring data, tracking data, historical data, prediction data, and summary data;
>
> displaying concurrent visualization of measurements from the data streams and the dynamic stability metrics directed to the wide area of the interconnected electric power grid;

> accumulating and updating the measurements from the data streams and the dynamic stability metrics, grid data, and non-grid data in real time as to wide area and local area portions of the interconnected electric power grid; and
>
> deriving a composite indicator of reliability that is an indicator of power grid vulnerability and is derived from a combination of one or more real time measurements or computations of measurements from the data streams and the dynamic stability metrics covering the wide area as well as non-power grid data received from the non-grid data source.

Elec. Power, 830 F.3d at 1351–52 (claim 12 of U.S. Patent No. 8,401,710).

Like claim 12 in *Electric Power*, here, "[t]he focus of the asserted claims . . . is on collecting information, analyzing it, and displaying certain results of the collection and analysis." *Elec. Power*, 830 F.3d at 1353; *see Univ. of Florida Research Found., Inc. v. Gen. Elec. Co.*, 916 F.3d 1363, 1367–68 (Fed. Cir. 2019) (data synthesis technology of drivers that interpret device specific protocols to present data in a single interface and convert data from a machine-specific to a machine-independent format is the quintessential do it on a computer patent); *SAP Am., Inc. v. InvestPic, LLC*, 898 F.3d 1161, 1164–65, 1167 (Fed. Cir. 2018) (calculating, analyzing, and displaying data by receiving a statistical analysis and performing a resampled statistical analysis to generate a resampled distribution and provide a report focused on selecting certain information, analyzing it using mathematical techniques, and reporting the results is an abstract idea); *iLife Techs., Inc. v Nintendo of Am., Inc.*, 839 F. App'x 534, 536 (Fed. Cir. 2021) (a motion sensor system that evaluates and communicates relative body movement using static and dynamic acceleration data collected from sensors is a system for sensing information, processing the collected information, and transmitting processed information as an abstract idea).

"[A] claim for a *new* abstract idea is still an abstract idea." *Synopsys, Inc. v. Mentor Graphics Corp.*, 839 F.3d 1138, 1151 (Fed. Cir. 2016); *see also RecogniCorp, LLC v. Nintendo Co.*, 855 F.3d 1322, 1327 (Fed. Cir. 2017) ("Adding one abstract idea (math) to another abstract idea (encoding and decoding) does not render the claim non-abstract."); *Apple, Inc. v. Ameranth, Inc.*, 842 F.3d 1229, 1240 (Fed. Cir. 2016) ("An abstract idea can generally be described at different levels of abstraction."). Even if the techniques are groundbreaking, innovative, or brilliant, that is not enough for eligibility. *SAP*, 898 F.3d at 1163 ("No matter how much of an advance in the finance field the claims recite, the advance lies entirely in the realm of abstract ideas, with no plausibly alleged innovation in the non-abstract application realm. An advance of that nature is ineligible for patenting."); *Clarilogic, Inc. v. FormFree Holdings Corp.*, 681 F. App'x 950, 954 (Fed. Cir. 2017) ("But a method for collection, analysis, and generation of information reports, where the claims are not limited to how the collected information is analyzed or reformed, is the height of abstraction.").

Here, data is collected and analyzed by a generic heuristic without any technical implementation details. The claimed heuristics, determinations, and comparison of values involve mathematical concepts and calculations. "[A]nalyzing information by steps people go through in their minds, or by mathematical algorithms, without more, [are] essentially mental processes within the abstract-idea category." *Elec. Power*, 830 F.3d at 1354. Steps of transmitting alarm conditions and recommended actions is abstract as an ancillary part of the collection and analysis because it merely presents the results of abstract processes of collecting and analyzing information, without more, such as identifying a particular tool for the presentation. *Id.*

b. Alice Step 1: Revised Guidance, Step 2A, Prong Two

(1) Petitioner's contentions

Petitioner asserts that the abstract nature of the claims is underscored by the fact that "they are directed to ***results***, rather than defining ***how*** the abstract concepts are carried out." Opp. RMTA 34. Petitioner contends that claim 23 does not limit which operational characteristic is measured, how the heuristic correlates collected data to the condition of the bearing, which possible values are used to define the severity levels, or what recommended actions should be taken. *Id.*

(2) Patent Owner's arguments

Patent Owner argues that "the claims are directed to patentable subject matter [and] Petitioner offers little of consequence in opposition beyond conclusory statements." Reply RMTA 17.

(3) Analysis

We determine that additional elements of railcars, a bearing adapter, sensing units, event engines, a mesh network, accelerometer, processing unit, display unit, temperature sensor, and communication management unit are generic components used to perform generic functions to implement the abstract idea. They do not improve the functioning of computers or other technology. They do not effect a particular treatment or a prophylaxis for a disease or a medical condition. They do not implement the abstract idea on a particular machine that is integral to the claim. They do not transform or reduce a particular article to a different state or thing. Nor do they apply the abstract idea in a meaningful way beyond linking its use to a particular technological environment. *See* Revised Guidance at 55 (identifying these considerations as indicative of an integration into a practical application).

The description of the additional elements confirms their status as "generic, conventional components that are commonly used in the railcar industry" (Opp. RMTA 33) to perform generic functions to implement the abstract idea without improving computers or other technology or technical field. "The sensors monitor and/or collect data on particular parameters and conditions of the railcar." Ex. 1001, 3:61–62. They may be any type of sensor including a temperature sensor, a pressure sensor, a load cell, a strain gauge, an accelerometer, a hall effect sensor, or a switch. *Id.* at 4:51–60. The sensors are contained in housing 14 of motes 10 with electrical circuitry 26 that can include analog and digital circuitry, CPUs, processors, circuit boards, memory, firmware, controllers, and other electrical items required to operate the sensor and process information. *Id.* at 4:64–5:9. Motes 10 include a long-term power source 34 such as a battery and circuitry for wireless communications to form an ad-hoc mesh network with other motes 10 and with a communication management unit 32. *Id.* at 5:23–42.

To impose a meaningful limit on the scope of a claim, the addition of a machine must play a significant part in permitting the claimed method to be performed, rather than function solely as an obvious mechanism for permitting a solution to be achieved more quickly such as by using a computer to perform calculations. *Versata Dev. Grp., Inc. v. SAP Am., Inc.*, 793 F.3d 1306, 1335 (Fed. Cir. 2015); *see Ultramercial, Inc. v. Hulu, LLC*, 772 F.3d 709, 716–717 (Fed. Cir. 2014) ("The claims of the '545 patent . . . are not tied to any particular novel machine or apparatus, only a general purpose computer. . . . Any transformation from the use of computers or the transfer of content between computers is merely what computers do and does not change the analysis.").

"Software can make non-abstract improvements to computer technology just as hardware improvements can, and . . . the improvements can be accomplished through either route." *Enfish, LLC v. Microsoft Corp.*, 822 F.3d 1327, 1335 (Fed. Cir. 2016). However, "to be directed to a patent-eligible improvement to computer functionality, the claims must be directed to an improvement to the functionality of the computer or network platform itself." *Customedia Techs., LLC v. Dish Network Corp.*, 951 F.3d 1359, 1365 (Fed. Cir. 2020) (citing *Enfish*, 822 F.3d at 1336–39).

Here, the sensing system uses generic sensors to collect and analyze information using mathematical concepts and operations. "Information as such is an intangible." *Elec. Power*, 830 F.3d at 1353 ("Accordingly, we have treated collecting information, including when limited to particular content (which does not change its character as information), as within the realm of abstract ideas."). No technical details are recited to indicate an improvement to computers, sensors, or another technical field.

"Merely claiming 'those functions in general terms, without limiting them to technical means for performing the functions that are arguably an advance,' does not make a claim eligible at step one." *Ericsson Inc. v. TCL Commc'n Tech. Holdings Ltd.*, 955 F.3d 1317, 1328 (Fed. Cir. 2020) (citation omitted); *SAP*, 898 F.3d at 1167 (to avoid being abstract, a claim must have the specificity to transform it from one claiming only a result to one claiming a way of achieving the result); *Elec. Power*, 830 F.3d at 1356 (the result-focused, functional nature of the claim language is a frequent feature of claims that are patent-ineligible); *see* Opp. RMTA 34 (the claims "are directed to ***results***, rather than defining ***how*** the abstract concepts are carried out").

c. Alice Step 2: Revised Guidance, Step 2B

(1) Petitioner's contentions

Petitioner contends that the recited physical elements are conventional and used in a conventional way that is disclosed in the prior art and does not provide significantly more than the abstract idea itself. Opp. RMTA 35.

(2) Patent Owner's arguments

Patent Owner argues that "the claims are directed to patentable subject matter [and] Petitioner offers little of consequence in opposition beyond conclusory statements." Reply RMTA 17.

(3) Analysis

Individually, the additional elements are conventional elements that perform known functions of sensing and processing data and reporting the results of the analysis. These components and functions are conventional. Heuristics and severity levels are part of the abstract idea without improving computers, sensors, or technology beyond the mathematical concepts and mental steps used to process the data. As discussed under Prong Two above, Patent Owner does not purport to have invented or improved the components or their functions beyond the abstract mathematical operations performed.

The ordered combination of elements recites no more than when they are considered individually. "If a claim's only 'inventive concept' is the application of an abstract idea using conventional and well-understood techniques, the claim has not been transformed into a patent-eligible application." *BSG Tech LLC v. BuySeasons, Inc.*, 899 F.3d 1281, 1290–91 (Fed. Cir. 2018). "[A] claimed invention's use of the ineligible concept to which it is directed cannot supply the inventive concept that renders the invention 'significantly more' than that ineligible concept." *Id.* at 1290.

The prior art LeFebvre discloses that it is known and conventional to place instrumented pads 16 with sensors 5 on bearing adapters of railcars. Ex. 1005 ¶¶ 19–23, Figs. 3, 4. LeFebvre discloses operation of pads 16 with temperature sensors in a passive, low power state programmed to switch on periodically to gather readings, perform analysis, and send a message via radio to data control unit 23 on the railcar if the pads detect indications of fault or impending failure. *Id.* ¶¶ 33–35. LeFebvre describes the use of temperature sensors and accelerometers. *Id.* ¶¶ 33, 37. LeFebvre uses a data control unit 23 to receive sensor readings from instrument pads 16 and to communicate data to the locomotive or other remote receivers. *Id.* ¶¶ 35–38.

As claimed, the arrangement and operation of the sensing units and other generic components is not inventive. Comparing sensor readings to other values and thresholds indicative of levels of severity is not inventive. *See TDE Petroleum Data Solutions, Inc. v AKM Enter., Inc.*, 657 F. App'x 991, 992–93 (Fed. Cir. 2016) (receiving mechanical and hydraulic data for well operations and comparing the data to a limit indicative of a threshold to select states of the well operation recited data gathering and processing steps that was an abstract idea as in *Electric Power*). *Electric Power* considered a system that collected, analyzed, and updated sensor measurements in *real time* based on limits, sensitivities, rates of change, and other metrics using conventional components and found an inventive step lacking. *Elec. Power*, 830 F.3d at 1356. "Wirelessly communicating status information about a system is similar to abstract ideas we have found in our previous cases." *Chamberlain Grp., Inc. v. Techtronic Indus. Co.*, 935 F.3d 1341, 1346 (Fed. Cir. 2019); *id.* at 1347 ("As such, the broad concept of communicating information wirelessly, without more, is an abstract idea.").

(4) Conclusion

We determine that substitute claims 23–43 are directed to an abstract idea without significantly more.

8. Unpatentability under Ground 1: Armitage, LeFebvre, Barone, Moretti, Inbarajan, and Betters

Petitioner asserts that substitute claims 23–43 are invalid under 35 U.S.C. § 103 over Armitage, LeFebvre, Barone, Moretti, Inbarajan, and Betters. Opp. RMTA 17–32.

a. Motivation to combine

(1) Petitioner's contentions

Petitioner asserts that a skilled artisan would have found it obvious to combine disclosures of Armitage, LeFebvre, Barone, and Moretti because all of them describe systems for wirelessly monitoring railcars using a plurality of sensors to monitor wheel bearings and communicate with a control unit on the railcar to determine if a bearing failure is approaching or imminent and raise an alarm when a failure condition is detected. Opp. RMTA 17–18.

Petitioner asserts that Inbarajan relates to a vehicle email notification system that is applicable to a variety of vehicle types, and Betters relates to an aircraft monitoring system that enables problems to be predicted and addressed earlier than is possible using conventional methodology. Opp. RMTA 18. Petitioner contends that a skilled artisan would have understood that the monitoring and reporting systems of Inbarajan and Betters are broadly applicable to a variety of vehicle types including railcars and would have been motivated to combine their teachings for reasons such as defining multiple severity levels in claims 23, 36, and 42 to better communicate the severity of a problem condition. *Id.* at 22–23.

(2) Patent Owner's arguments

Patent Owner argues that Petitioner does not explain why a skilled artisan would have combined the references as asserted. Reply RMTA 15. Patent Owner asserts that "Inbarajan and Betters are not from the same field as the '673 Patent or directed to any type of rail technology, and they are not reasonably pertinent because they do not have the same purpose as the '673 Patent." *Id.* at 16. Patent Owner argues that Inbarajan's email system would not provide real-time notification to a recipient driving a car, and Betters' use of aircraft data for preventive maintenance is not pertinent to monitoring railcars that are connected serially and move consecutively along a limited number of tracks so every car must be monitored for prompt, accurate prediction and identification of cars that can damage tracks or derail. *Id.* at 16–17. Patent Owner asserts that neither reference uses heuristics. *Id.* at 17.

(3) Analysis

Petitioner reasonably contends that a skilled artisan would have been motivated to combine the complementary teachings of Armitage, LeFebvre, Barone, and Moretti to improve the operability of the overall combination. "The combination of familiar elements according to known methods is likely to be obvious when it does no more than yield predictable results." *KSR*, 550 U.S. at 416. Similarly, "if a technique has been used to improve one device, and a person of ordinary skill in the art would recognize that it would improve similar devices in the same way, using the technique is obvious unless its actual application is beyond his or her skill." *Id.* at 417. The references monitor operational conditions of vibration and temperature, and Barone and Moretti mount sensor nodes on sidewalls of bearing adapters to align them with an axis of rotation for better readings. Opp. RMTA 19–20.

Barone's and Moretti's teachings to locate sensor nodes on sidewalls of a bearing adapter aligned with the axis of rotation so accelerometers can detect vibrations more accurately would improve the methods and systems of Armitage and LeFebvre similarly. *KSR*, 550 U.S. at 416, 417. The use of multiple severity levels in Inbarajan and Betters would improve the accuracy of communicating the severity of a problem. Opp. RMTA 22–23.

We agree with Petitioner that Inbarajan and Betters are from the same field of endeavor as the invention because they are "directed to vehicular monitoring systems that collect data regarding operating parameters of the vehicle, analyze the collected, assign severity levels to any detected problems, and send appropriate alerts to a user." Sur-reply RMTA 14. Inbarajan's onboard system triggers messages regarding maintenance issues and severity levels of diagnosed problems. Ex. 1036, Abstr., 5:49–65. Betters' system analyzes aircraft data for preventative maintenance based on acceptable ranges of values and thresholds to trigger a maintenance alert. Ex. 1037, Abstr. Their methods and techniques are broadly applicable to a variety of vehicle types including railcars and therefore reasonably pertinent to railcar monitoring addressed by the '673 patent. Sur-reply RMTA 14 (citing Ex. 1035 ¶ 53). Inbarajan's system can be used on mobile vehicles such as marine vessels, aircraft, automobiles, and diesel trucks. Ex. 1036, 5:58–65. Betters' system processes data for preventative maintenance of highly complex machines such as aircraft. Ex. 1037, 1:7–36.

(4) Conclusion

Petitioner has established by a preponderance of evidence that Inbarajan and Betters are analogous art and that a skilled artisan would have combined the prior art in the manner asserted for predictable results.

b. Claim 23

(1) Petitioner's contentions

Petitioner contends that Armitage, LeFebvre, Barone, and Moretti each discloses sensor nodes for monitoring operational characteristics of a railcar wheel bearing such as vibration and temperature in element 23(a), and it would have been obvious to mount the sensing node on a sidewall of a bearing adapter in element 23(a) based on Barone's teaching to mount an accelerometer on a bearing adapter sidewall and Moretti's teaching to mount a vibration sensor on a bearing box wall vertically aligned with the axis of rotation of a bearing where vibrations are more intense. Opp. RMTA 19–20.

Petitioner contends that Armitage and LeFebvre perform heuristic calculations on collected bearing sensor data to generate numeric values that represent or correlate to the operational state of the bearing in element 23(b). Opp. RMTA 21–22; Sur-reply RMTA 13.

Petitioner asserts that LeFebvre discloses different severity levels such as lower level deviations and higher levels of severity where the magnitude of the deviation is sufficient to cause alarm in element 23(c). Opp. RMTA 22–23. Petitioner asserts that Armitage's color-coded system indicates the severity level of a detected condition, Inbarajan's color coded system uses three severity levels, and Betters defines multiple severity levels. *Id.* at 23. Petitioner asserts that a skilled artisan would have used plural severity levels to communicate more clearly the severity of a problem condition. *Id.*

Petitioner contends that Armitage describes a railway car health scorecard that recommends a course of action based on the level of the alarm that is raised and Barone recommends actions based on the severity of the fault in element 23(d). Opp. RMTA 24.

(2) Patent Owner's arguments

Patent Owner argues that LeFebvre compares the temperature of a bearing to other bearing temperatures to infer the well-being of the bearing but LeFebvre does not correlate numeric values to the condition of a bearing. RMTA 31. Patent Owner argues that LeFebvre does not disclose severity levels for a bearing with each assignable based on a magnitude of deviations of the numeric values from nominal operating conditions because LeFebvre uses a simple threshold alarm that all is well, which is not a severity level, or something is amiss. *Id.* at 31–32.

Patent Owner asserts that Armitage uses dynamic normalization that changes the range of operational values for an undercarriage element in real time rather than correlate numeric values to the condition of a bearing in element 23(b). RMTA 32–33. Patent Owner also argues that none of the art of record discloses an alarm condition that defines recommended actions to take. *Id.* at 33.

(3) Analysis

As discussed in Section II.B.1. *supra*, we interpret "heuristic" as "a rule, algorithm, function, formula, graphing function, or similar mechanism applied to data to assist in analyzing and/or interpreting the data" as we did in our Decision. Decision 8. LeFebvre applies algorithm heuristics of an inference engine to identify periodicities and *cross correlations* to identify truck hunting, swaying, rocking, changing loads, wheel irregularities. Ex. 1005 ¶ 54. LeFebvre applies heuristics to correlate bearing temperatures to identify bearing conditions and deviations from nominal conditions based on comparison to numeric values such as alarm thresholds, alarm levels, and trends. *Id.* ¶¶ 58–64.

The ’673 patent describes similar use of bearing temperatures of an axle mate, wagon mates, or fleet mates of a bearing or ambient temperatures that are used to define an alarm level of a bearing deviation condition. Ex. 1001, 13:30–14:3. As discussed in Section II.H.4.b. *supra*, the inventors chose not to disclose absolute temperature values that they had developed. *See* Ex. 2013 ¶¶ 14, 16. Absolute numeric values are not required by element 23(b) nor supported by the written description.

LeFebvre identifies a failing bearing in its early stages (lower level of severity) based on heuristics from frequency spectrum analysis values. Ex. 1005 ¶ 59. Similarly, high amplitude loads at lower frequency values can identify a less severe deviation of a flat spot or shelled wheel tread whereas loads at higher frequency values can identify more severe wheel derailments. *Id.* ¶¶ 60, 61. Comparison of heuristics to different frequency values yields different levels of severity and different recommended actions of schedule a wheel change before a problem is more severe and requires unscheduled maintenance or is even more sever and causes a derailment. *Id.*

Armitage also uses heuristics to derive operational values of bearings that are compared to numeric values to determine a degree of deviation and severity of a problem condition as a bearing value reaches higher numeric values that indicate more deviation and more severity of yellow that requires service and red that indicates a more serious deviation. Ex. 1006 ¶¶ 43, 44.

(4) Conclusion

We determine that Petitioner has established by a preponderance of evidence that claim 23 is unpatentable over Armitage, LeFebvre, Barone, Moretti, Inbarajan, and Betters, and we adopt Petitioner’s contentions.

c. Claims 24–32

(1) Petitioner's contentions

Petitioner contends that substitute dependent claims 24, 25, 27, and 29–32 correspond to original claims 13, 2, 4, and 6–9, respectively, and are disclosed by Armitage. Opp. RMTA 25 (citing Pet. 58–68; Ex. 1003 ¶¶ 204–215; 240–242; Ex. 1035 ¶ 71). Petitioner contends that claims 26 and 28 correspond to original claims 3 and 5 and are disclosed by Armitage in view of LeFebvre. *Id.* (citing Pet. 70–71; Ex. 1003 ¶¶ 250–253).

(2) Patent Owner's arguments

Patent Owner does not contest Petitioner's assertions regarding claims 24–32. *See generally* RMTA; Reply RMTA.

(3) Conclusion

We determine Petitioner has established by a preponderance of evidence that claims 24–32 are unpatentable over Armitage, LeFebvre, Barone, Moretti, Inbarajan, and Betters and adopt Petitioner's contentions.

d. Claim 33

(1) Petitioner's contentions

Petitioner asserts that Armitage and LeFebvre disclose the limitations of claim 33 that are present in claim 10. Opp. RMTA 26–27 (citing Pet. 28–31, 65–67; Ex. 1003 ¶¶ 100–110, 227–235; Ex. 1035 ¶¶ 76, 77). Petitioner contends Armitage discloses a temperature sensor attached to a non-rotating structure of a bearing mount to measure bearing temperatures, and a skilled artisan would understand that measuring bearing temperatures indirectly requires correlating a temperature of the bearing with the temperature of the non-rotating component and to use the full range of temperatures that would occur in operation as recited in element 33(b). Opp. RMTA 27.

Petitioner contends that a skilled artisan would understand that comparing a measured value (or a calculated value) to a predefined range or temperature threshold as recited in element 33(c) is the simplest way to detect a defect or failure. Opp. RMTA 28. Petitioner contends that Barone and Moretti expressly disclose this principle by comparing measured temperature values with predetermined reference values that are correlated with the maximum safe operating temperatures of the bearing. *Id.* at 28–31.

Petitioner contends that defining a plurality of severity levels by a deviation of the temperature from a predetermine reference temperature value and transmitting an alarm in element 33(d) are disclosed for the same reasons asserted for elements 23(c) and 23(d). Opp. RMTA 30.

(2) Patent Owner's arguments

Patent Owner argues that LeFebvre, Armitage, and Barone do not disclose using calibrated correlations to determine deviations from expected operating conditions. RMTA 33–34. Patent Owner argues that Petitioner has interpreted Armitage's silence regarding how the sensor nodes are coupled to the railcar. PO Resp. 51.

(3) Analysis

Armitage discloses that control node 130 receives sensor information from sensor nodes to determine a fault condition such as bearing temperature and sensor nodes 320–327 "are each attached or coupled to the associated wheel assembly, preferably to a non-rotating portion." Ex. 1006 ¶¶ 27, 34. Petitioner asserts, supported by testimony of Mr. Ricca, that a skilled artisan would understand that indirect measurements of bearing temperatures use calibrated correlations of temperature of a non-rotating part to the bearing temperature over range of values. Opp. RMTA 27 (citing Ex. 1035 ¶ 79).

Barone and Moretti both compare measured values such as bearing temperatures to preselected threshold levels or values to determine if the failure or defect of a bearing is imminent or likely and generate an alarm or alert responsive to the determination. Ex. 1007 ¶¶ 241, 253; Ex. 1022, 4:8–12; *see also* Ex. 1008 ¶ 104 (indicating knowledge in the art that temperature is compared to a prescribed alarm level to trigger an alarm); Opp. RMTA 28–29 (citing the same). We agree with Petitioner that such comparisons of measured or calculated values to a predetermined threshold are "a simple and reliable way to detect a defect or failure" and this heuristic could be used in the systems of LeFebvre and Armitage to detect dangerously high bearing temperatures. *Id.* at 29–30 (citing Ex. 1035 ¶¶ 85, 86).

(4) Conclusion

We determine that Petitioner has established by a preponderance of evidence that claim 33 is unpatentable over Armitage, LeFebvre, Barone, Moretti, Inbarajan, and Betters, and we adopt Petitioner's contentions.

e. Claims 34 and 35

(1) Petitioner's contentions

Petitioner contends that the limitations added by claim 34 correspond to original claim 11 and are disclosed by Armitage, and the limitations added by claim 35 correspond to original claim 12 and are disclosed by Armitage and LeFebvre. Opp. RMTA 30 (citing Pet. 67–68, 71–72; Ex. 1003 ¶¶ 236–239, 254–259; Ex. 1035 ¶ 88).

(2) Patent Owner's arguments

Patent Owner does not contest Petitioner's assertions regarding claims 34 and 35. *See generally* RMTA; Reply RMTA.

(3) Conclusion

We determine that Petitioner has established by a preponderance of evidence that claims 34 and 35 are unpatentable over Armitage, LeFebvre, Barone, Moretti, Inbarajan, and Betters, and we adopt those contentions.

f. Claim 36

(1) Petitioner's contentions

Petitioner contends that most limitations of claim 36, including all of the limitations present in original claim 14, are obvious over Armitage and LeFebvre. Opp. RMTA 31 (citing Pet. 73–74; Ex. 1003 ¶¶ 261–268; Ex. 1035 ¶ 90). Petitioner relies on its contentions for element 23(a) that Armitage discloses temperature sensors and accelerometers attached to a non-rotating structure such as a bearing mount, Barone discloses to mount accelerometers to a sidewall of a bearing adapter, and Moretti teaches to mount a vibration sensor on a bearing box wall to teach and suggest the similar subject matter recited in element 36(a). *Id.* (citing contentions for element 23(a) in Section III.A.2.). Petitioner relies on its contentions for claims 23 and 33 to support its contentions that elements 36(b) and 36(c) are taught or suggested by the asserted prior art. *Id.* (citing contentions for elements 23(a), 23(b), 23(c), 23(d), 33(c)).

(2) Patent Owner's arguments

Patent Owner does not contest Petitioner's assertions regarding claim 36 apart from challenging claim 23. *See generally* RMTA; Reply RMTA.

(3) Conclusion

We determine that Petitioner has established by a preponderance of evidence that claim 36 is unpatentable over Armitage, LeFebvre, Barone, Moretti, Inbarajan, and Betters, and we adopt Petitioner's contentions.

g. Claims 37–41

(1) Petitioner's contentions

Petitioner contends that limitations added by claims 37–41 correspond to original claims 15–18 and 20 and are disclosed by Armitage in view of LeFebvre. Opp. RMTA 31–32 (citing Pet. 74–77; Ex. 1003 ¶¶ 269–281; Ex. 1035 ¶ 97).

(2) Patent Owner's arguments

Patent Owner does not contest Petitioner's assertions regarding claims 37–41. *See generally* RMTA; Reply RMTA.

(3) Conclusion

We determine that Petitioner has established by a preponderance of evidence that claims 37–41 are unpatentable over Armitage, LeFebvre, Barone, Moretti, Inbarajan, and Betters, and we adopt those contentions.

h. Claim 42

(1) Petitioner's contentions

Petitioner contends that most limitations of claim 42, including all limitations present in original claim 21, are obvious over Armitage and LeFebvre. Opp. RMTA 32 (citing Pet. 77; Ex. 1003 ¶¶ 282–286; Ex. 1035 ¶ 99). Additionally, Petitioner cites its contentions for elements 23(a) for element 42(a), its contentions for element 23(a), 23(b), and 33(c) for element 42(c), and its contentions for elements 23(c) and 23(d) for elements 42(d) and 42(e). *Id.*

(2) Patent Owner's arguments

Patent Owner does not contest Petitioner's assertions regarding claim 42 apart from challenging claim 23. *See generally* RMTA; Reply RMTA.

(3) Conclusion

We determine that Petitioner has established by a preponderance of evidence that claim 42 is unpatentable over Armitage, LeFebvre, Barone, Moretti, Inbarajan, and Betters, and we adopt Petitioner's contentions.

i. Claim 43

(1) Petitioner's contentions

Petitioner contends that Armitage and LeFebvre disclose claim 43. Opp. RMTA 32 (citing Pet. 77; Ex. 1003 ¶¶ 287–289; Ex. 1035 ¶ 103).

(2) Patent Owner's arguments

Patent Owner does not contest Petitioner's assertions regarding claim 43. *See generally* RMTA; Reply RMTA.

(3) Conclusion

We determine that Petitioner has established by a preponderance of evidence that claim 43 is unpatentable over Armitage, LeFebvre, Barone, Moretti, Inbarajan, and Betters, and we adopt Petitioner's contentions.

9. Unpatentability under Ground 2: LeFebvre, Armitage, Barone, Moretti, Inbarajan, and Betters

Petitioner asserts that claims 23–43 are unpatentable under § 103 over LeFebvre, Armitage, Barone, Moretti, Inbarajan, and Betters. Opp. RMTA 17–32.

a. Motivation to combine

(1) Petitioner's contentions

Petitioner provides the same contentions as for Ground 1. *See* Opp. RMTA 17–18, 22–23.

(2) Patent Owner's arguments

Patent Owner presents the same arguments as Ground 1. Reply RMTA 15–17.

(3) Analysis

We determine that Petitioner has established that a skilled artisan would have been motivated to combine the teachings of the references as asserted by Petitioner for the reasons discussed in Section II.H.8.a. *supra*.

(4) Conclusion

Petitioner has established by a preponderance of evidence that a skilled artisan would have combined the prior art in the manner asserted for predictable results, and we adopt Petitioner's contentions.

b. Claim 23–43

(1) Petitioner's contentions

Petitioner provides detailed contentions supported by testimony of Mr. Ricca (Declaration of Steven Ricca, Ex. 1035) explaining how the asserted prior art teaches and suggests the limitations of claims 23–43 and renders those claims unpatentable. Opp. RMTA 19–32.

(2) Patent Owner's arguments

Patent Owner raises the same arguments for Ground 2 as Patent Owner asserted for Ground 1. Reply RMTA 14–17.

(3) Analysis

We find that the asserted prior art teaches and suggests the limitations of claims 23–43 and renders those claims unpatentable for the reasons asserted by Petitioner and adopt those contentions in our findings in addition to our analysis of the similar issues in Section II.H.8. for Ground 1 *supra*.

(4) Conclusion

We determine that Petitioner has established by a preponderance of evidence that claims 23–43 are unpatentable over LeFebvre, Armitage, Barone, Moretti, Inbarajan, and Betters, and we adopt those contentions.

I. Motions to Exclude

Because our Final Written Decision does not rely on Exhibits 2011, 2012, and 2157, Petitioner's motion to exclude those exhibits is moot.

Because our Final Written Decision does not rely on Exhibits 1028 and 1031, Patent Owner's motion to exclude those exhibits is moot.

III. CONCLUSION

Petitioner has demonstrated by a preponderance of evidence that original claims 1–18 and 20–22 of the '673 patent are unpatentable and that substitute claims 23–43 are ineligible for patenting under 35 U.S.C. § 101 and unpatentable under 35 U.S.C. §§ 112, first paragraph, and 35 U.S.C. § 103(a). Our determinations are summarized below.

Claims	35 U.S.C. §	Reference(s)	Claims Shown Unpatentable	Claims Not Shown Unpatentable
1–7, 10–18, 20–22	103(a)	LeFebvre	1–7, 10–18, 20–22	
8, 9	103(a)	LeFebvre, Barone	8, 9	
1, 2, 4, 6–11, 13	103(a)	Armitage		1, 2, 4, 6–11, 13
3, 5, 12–18, 20–22	103(a)	Armitage, LeFebvre		3, 5, 12–18, 20–22
Overall Outcome			1–18, 20–22	

Motion to Amend Outcome	Claims
Original Claims Cancelled by Amendment	
Substitute Claims Proposed in Amendment	23–43
Substitute Claims: Motion to Amend Granted	
Substitute Claims: Motion to Amend Denied	23–43
Substitute Claims: Determined Unpatentable	23–43
Substitute Claims: Not Reached	

IV. ORDER

In consideration of the foregoing, it is hereby:

ORDERED that original claims 1–18 and 20–22 of the ’673 patent have been shown to be unpatentable;

FURTHER ORDERED that Patent Owner’s Revised Motion to Amend is denied;

FURTHER ORDERED that proposed substitute claims 23–43 have been shown to be ineligible for patenting and unpatentable;

FURTHER ORDERED that Petitioner’s and Patent Owner’s Motions to Exclude are dismissed as moot; and

FURTHER ORDERED that because this is a Final Written Decision, parties to this proceeding seeking judicial review of this Decision must comply with the notice and service requirements of 37 C.F.R. § 90.2.[7]

[7] Should Patent Owner wish to amend the challenged claims in a reissue or reexamination proceeding, we draw Patent Owner’s attention to the *Notice Regarding Options for Amendments by Patent Owner Through Reissue or Reexamination During a Pending AIA Trial Proceeding*. *See* 84 Fed. Reg. 16654 (Apr. 22, 2019). If Patent Owner files a reissue application or request for reexamination of the challenged patent, we remind Patent Owner of its continuing obligation to notify the Board of such related matters in updated mandatory notices. *See* 37 C.F.R. § 42.8(a)(3), (b)(2).

PETITIONER:

Eric J. Rakestraw
Daisy Manning
Husch Blackwell LLP
PTAB-ERakestraw@huschblackwell.com
PTAB-DManning@huschblackwell.com

PATENT OWNER:

Jeff E. Schwartz
P. Marshall Ticer
Gary A. Hecht
Ryan North Miller
Fox Rothschild LLP
jeschwartz@foxrothschild.com
mticer@foxrothschild.com
ghecht@foxrothschild.com
rmiller@foxrothschild.com