US010137915B2

(12) **United States Patent**
LeFebvre et al.

(10) **Patent No.: US 10,137,915 B2**
(45) **Date of Patent: Nov. 27, 2018**

(54) **SYSTEM AND METHOD FOR DETECTING OPERATIONAL ANOMALIES IN TRAIN CONSISTS AND RAILCARS**

(71) Applicant: **Amsted Rail Company, Inc.**, Chicago, IL (US)

(72) Inventors: **William LeFebvre**, West Chester, PA (US); **Andrew Martin**, West Chester, PA (US); **Francis James Cooper**, Downingtown, PA (US); **Rachel W. Adamec**, Norristown, PA (US)

(73) Assignee: **AMSTED RAIL COMPANY, INC.**, Chicago, IL (US)

(*) Notice: Subject to any disclaimer, the term of this patent is extended or adjusted under 35 U.S.C. 154(b) by 0 days.

(21) Appl. No.: **15/108,065**

(22) PCT Filed: **Dec. 24, 2014**

(86) PCT No.: **PCT/US2014/072380**

§ 371 (c)(1),
(2) Date: **Jun. 24, 2016**

(87) PCT Pub. No.: **WO2015/100425**

PCT Pub. Date: **Jul. 2, 2015**

(65) **Prior Publication Data**

US 2016/0325767 A1 Nov. 10, 2016

Related U.S. Application Data

(60) Provisional application No. 61/920,700, filed on Dec. 24, 2013.

(51) **Int. Cl.**
B61L 27/00 (2006.01)
B61L 15/00 (2006.01)
(Continued)

(52) **U.S. Cl.**
CPC ***B61L 27/0094*** (2013.01); ***B61K 9/00*** (2013.01); ***B61K 9/04*** (2013.01); ***B61L 15/0027*** (2013.01);
(Continued)

(58) **Field of Classification Search**
CPC B60T 17/22; B61L 15/00; B61L 15/0018; B61L 15/0027; B61L 15/0054;
(Continued)

(56) **References Cited**

U.S. PATENT DOCUMENTS

3,718,040 A 2/1973 Freeman et al.
5,446,451 A 8/1995 Grosskopf, Jr.
(Continued)

FOREIGN PATENT DOCUMENTS

EP 1548419 A1 6/2005
EP 2650191 A1 10/2013
(Continued)

OTHER PUBLICATIONS

●ffice Action dated Jul. 3, 2018 issued by Japanese Patent ●ffice in related Japanese Patent application 2016-542732.
(Continued)

Primary Examiner — Jason C Smith
(74) *Attorney, Agent, or Firm* — Fox Rothschild LLP

(57) **ABSTRACT**

A system for monitoring railcar and tram consist operational parameters and detecting anomalies in the operation and condition thereof using sensors to feed data to a distributive complex event processing engine.

37 Claims, 14 Drawing Sheets

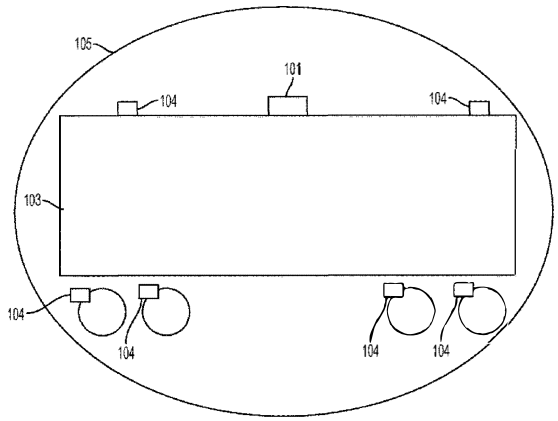

(51) **Int. Cl.**

B61K 9/00	(2006.01)
B61K 9/04	(2006.01)
B61L 25/02	(2006.01)
G01M 17/10	(2006.01)

(52) **U.S. Cl.**
CPC ***B61L 15/0081*** (2013.01); ***B61L 25/021*** (2013.01); ***B61L 25/025*** (2013.01); ***B61L 27/0077*** (2013.01); ***G01M 17/10*** (2013.01); *B61L 15/0036* (2013.01)

(58) **Field of Classification Search**
CPC ... B61L 15/0072; B61L 15/0081; G01K 7/02; G06F 19/00; G08B 21/18
See application file for complete search history.

(56) **References Cited**

U.S. PATENT DOCUMENTS

5,603,556	A	2/1997	Klink	
5,682,139	A	10/1997	Pradeep et al.	
5,691,980	A	11/1997	Welles, II et al.	
6,175,784	B1	1/2001	Jicha et al.	
6,184,798	B1	2/2001	Egri	
6,301,531	B1	10/2001	Pierro et al.	
6,339,397	B1	1/2002	Baker	
6,668,216	B2	12/2003	Mays	
7,336,156	B2 *	2/2008	Arita	H04B 3/60 180/2.1
7,688,218	B2 *	3/2010	LeFebvre	B61K 9/00 246/169 R
7,698,962	B2 *	4/2010	LeFebvre	B61F 5/305 177/136
8,244,411	B2	8/2012	Baker	
8,370,006	B2 *	2/2013	Kumar	B61L 3/006 701/19
8,672,273	B2	3/2014	Brown et al.	
8,751,290	B2	6/2014	Schullian et al.	
9,365,223	B2	6/2016	Martin et al.	
9,663,092	B2	5/2017	Martin et al.	
2004/0201464	A1	10/2004	Oonishi	
2005/0259619	A1	11/2005	Boettle et al.	
2006/0264221	A1	11/2006	Koike et al.	
2007/0241610	A1 *	10/2007	Smith	B60T 13/66 303/22.6
2008/0195265	A1 *	8/2008	Searle	B61K 9/04 701/19
2009/0001226	A1 *	1/2009	Haygood	B61K 9/00 246/169 S
2009/0173840	A1 *	7/2009	Brown	B61L 15/0027 246/1 R
2010/0200307	A1 *	8/2010	Toms	G01G 19/042 177/163
2011/0270475	A1 *	11/2011	Brand	B61L 15/0027 701/20
2011/0282540	A1 *	11/2011	Armitage	H04Q 9/00 701/31.4

FOREIGN PATENT DOCUMENTS

JP	05213195	A	8/1993
JP	05343294		12/1993
JP	08015099		1/1996
JP	10217968		8/1998
JP	11192948		7/1999
JP	2004294419	A1	10/2004
JP	2009210301	A	9/2009
WO	2001015001	A2	1/2001
WO	2005105536	A1	10/2005

OTHER PUBLICATIONS

"Mechanical Engineering Test Technologies", Han Jianhai, et al., Beijing China: Tsinghua University Press, pp. 77-80, May 2010.
Office Action dated Aug. 31, 2018 issued by the CPO in related Chinese patent application 201480076070.3. References D1 and D2 as cited in the Office Action, or US equivalents thereof, were previously made of record in the present application. D1 (CN101346268A) is a Chinese equivalent of U.S. Pat. No. 7,688,218.

* cited by examiner

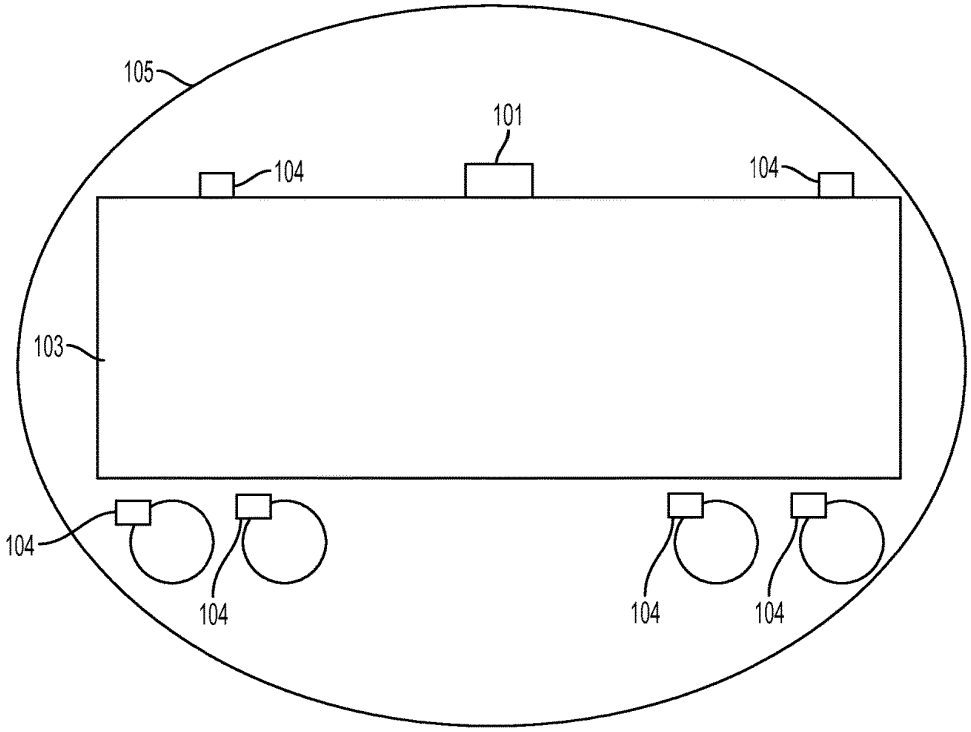

FIG. 1

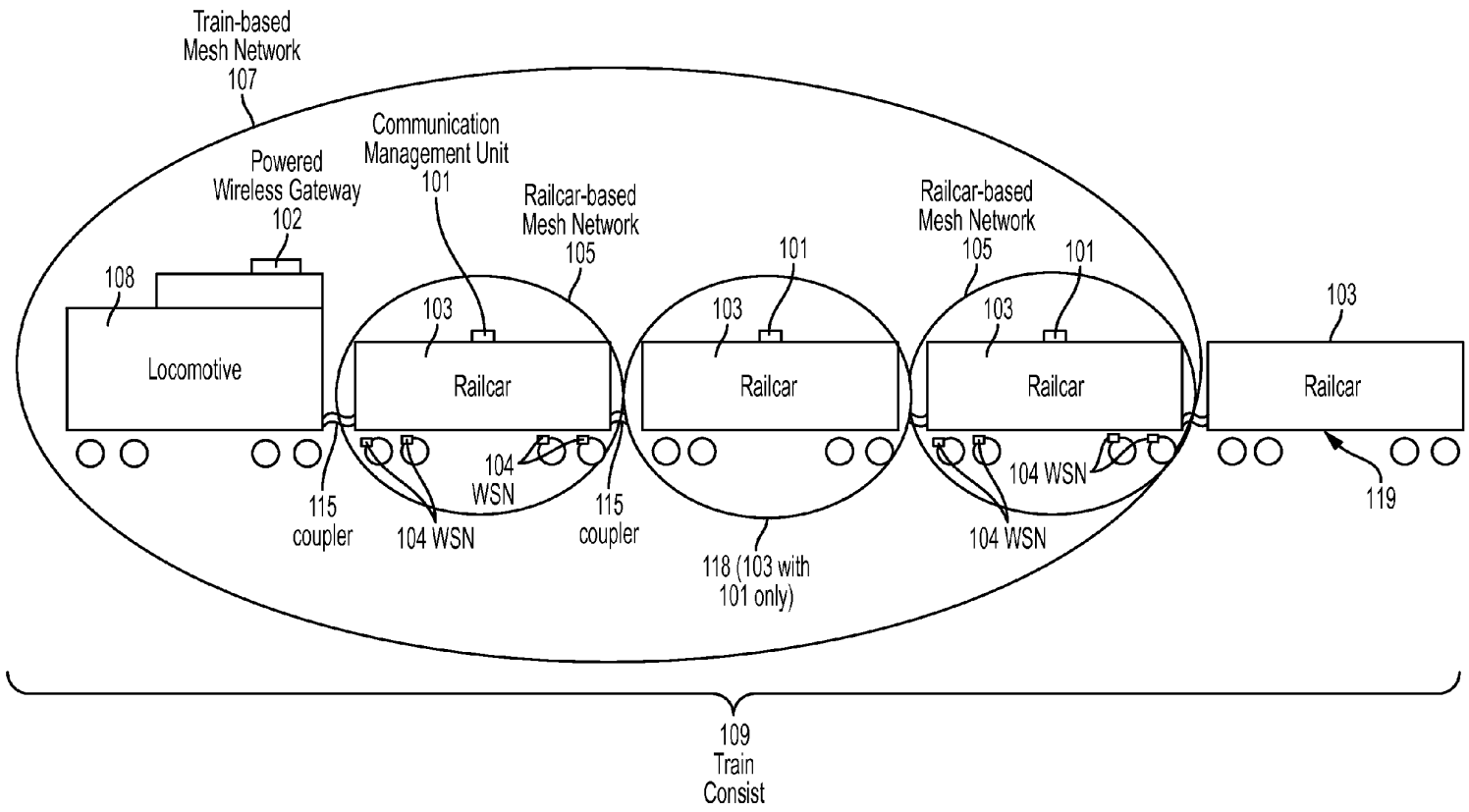
Train-based
Mesh Network
107
Powered
Wireless Gateway
102
Communication
Management Unit
101
Railcar-based
Mesh Network
105
Railcar-based
Mesh Network
105
101
101
108
103
103
103
103
Locomotive
Railcar
Railcar
Railcar
Railcar
104
WSN
104 WSN
104 WSN
104 WSN
115
coupler
115
coupler
118 (103 with
101 only)
119
109
Train
Consist

FIG. 2

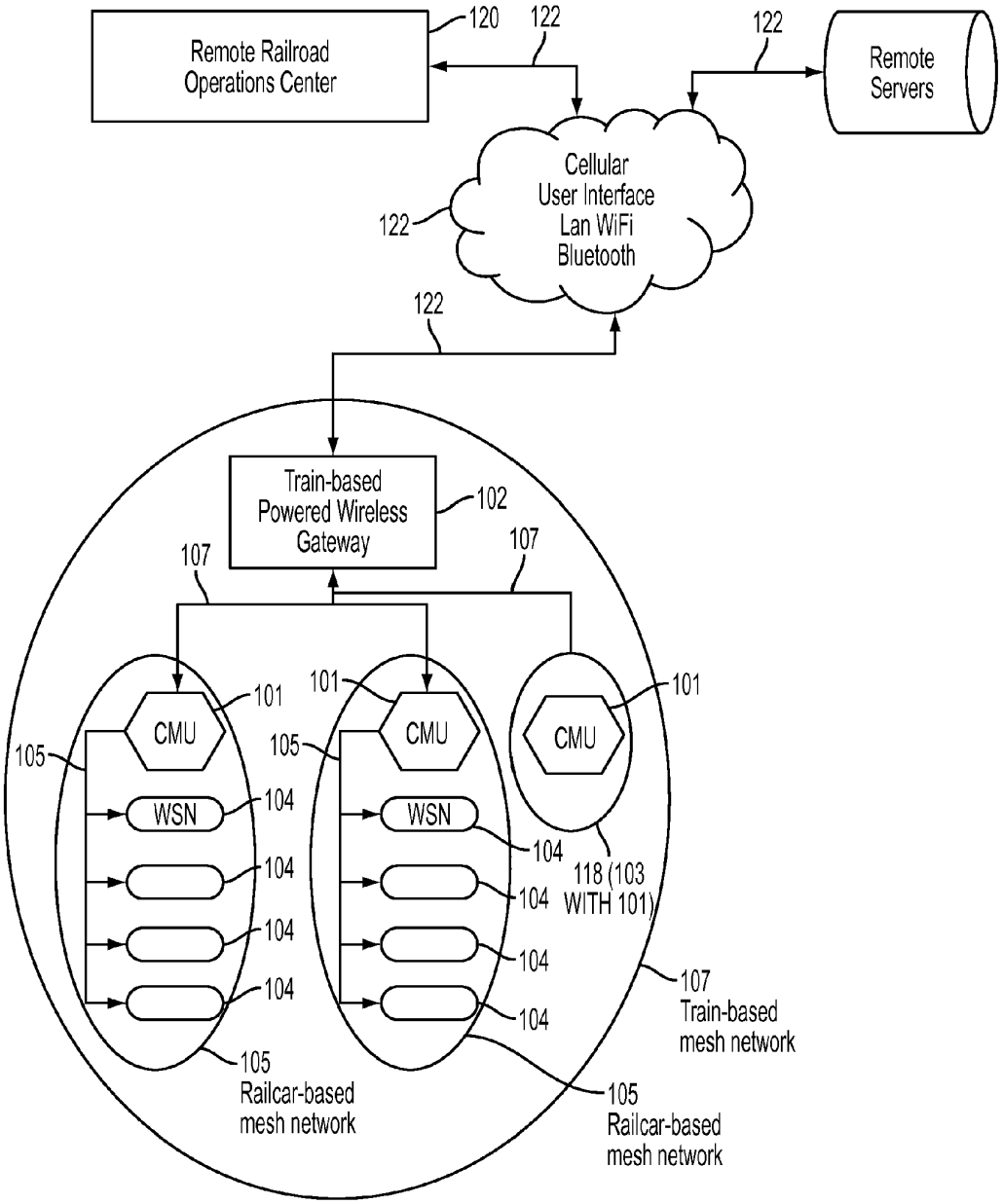
Remote Railroad Operations Center
120
122
122
Remote Servers
Cellular User Interface Lan WiFi Bluetooth
122
122
Train-based Powered Wireless Gateway
102
107
107
101
CMU
105
WSN
104
104
104
104
101
CMU
105
WSN
104
104
104
104
101
CMU
118 (103 WITH 101)
107 Train-based mesh network
105 Railcar-based mesh network
105 Railcar-based mesh network

FIG. 3

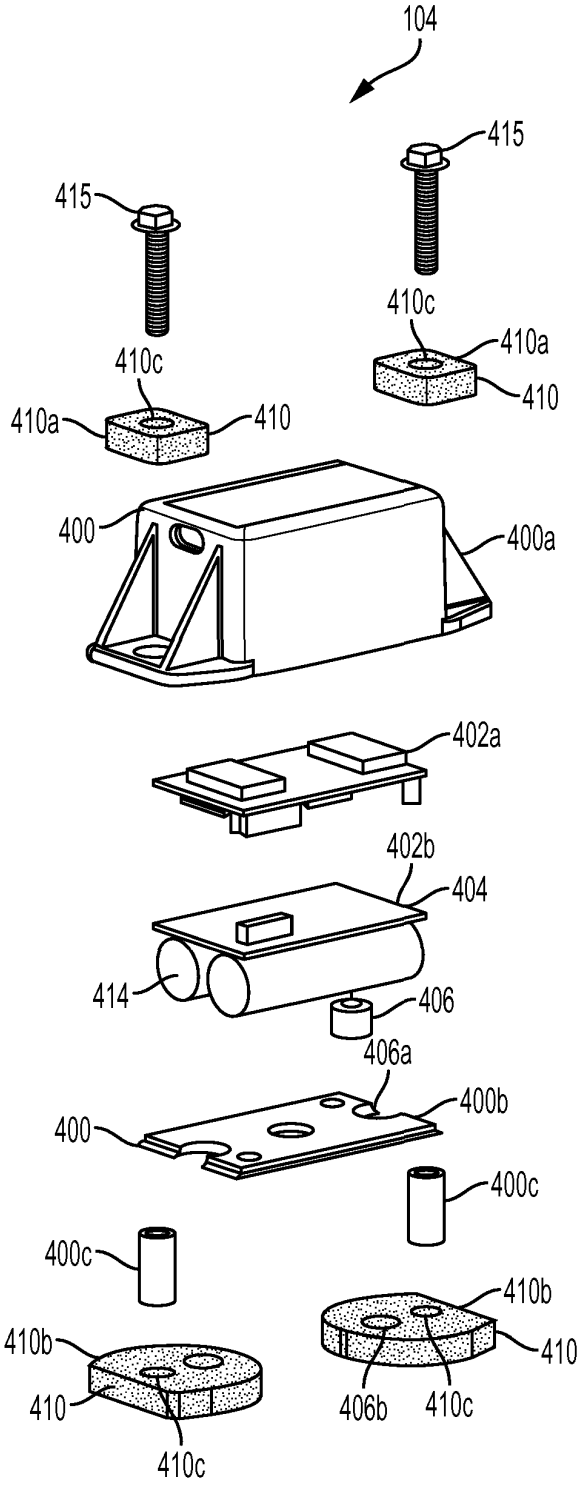
104
415
415
410c
410a
410
410c
410a
410
400
400a
402a
402b
404
414
406
406a
400
400b
400c
400c
410b
410
410b
410
406b
410c
410c

FIG. 4

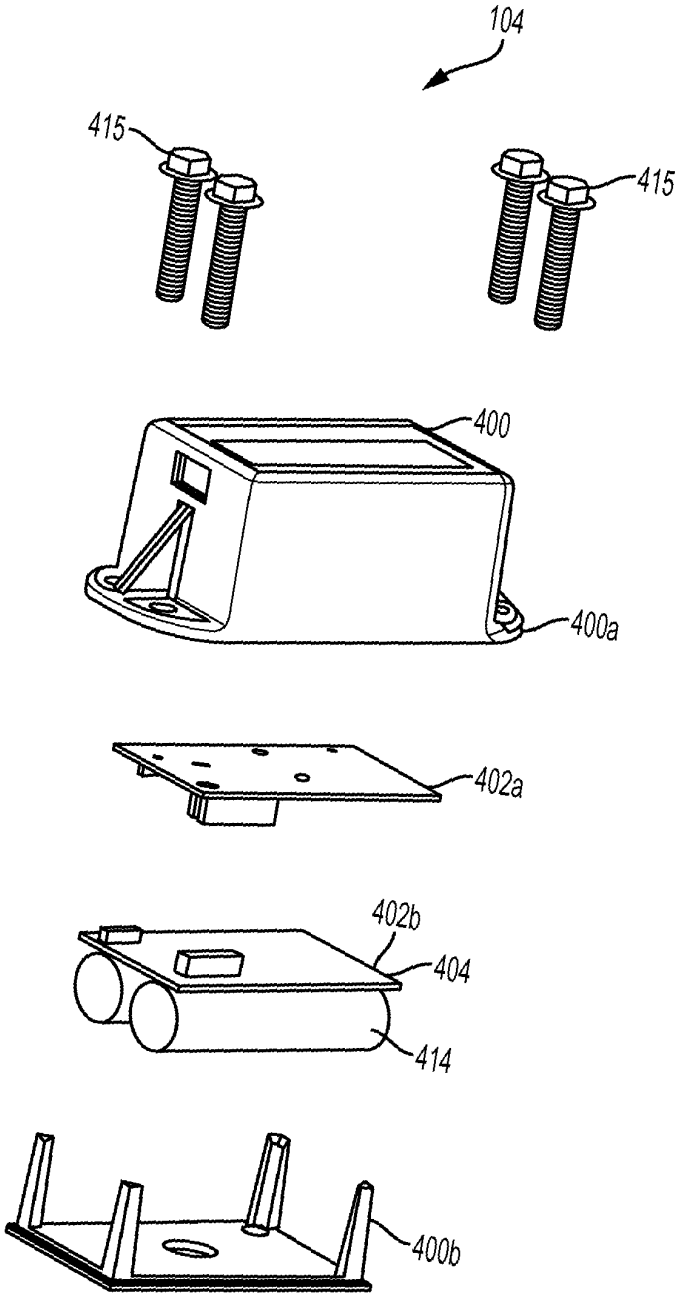

FIG. 5

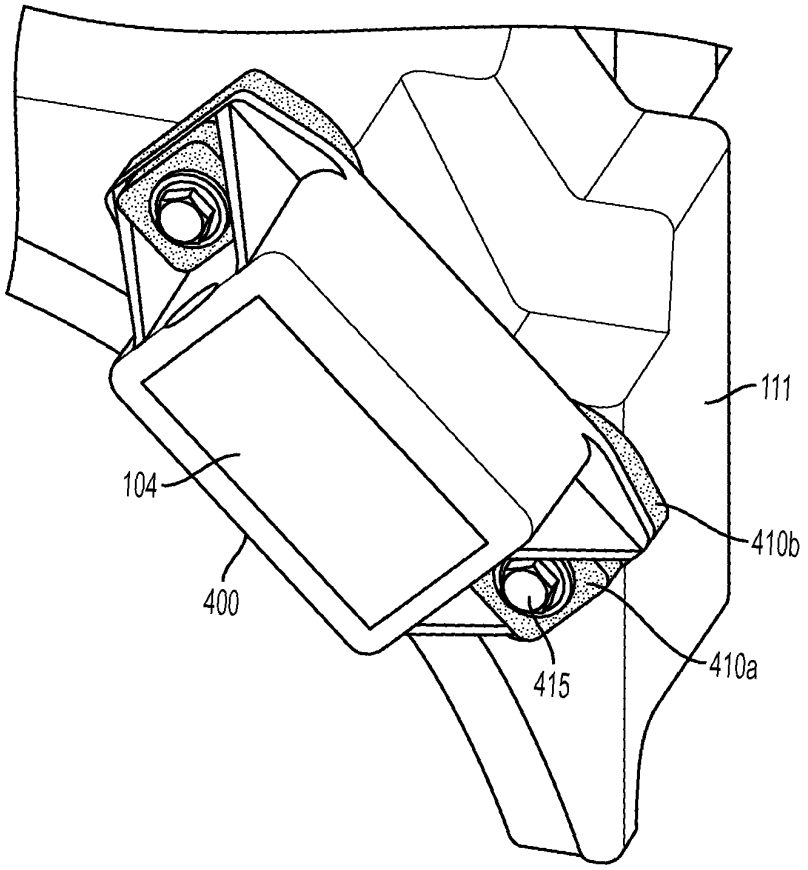

FIG. 6

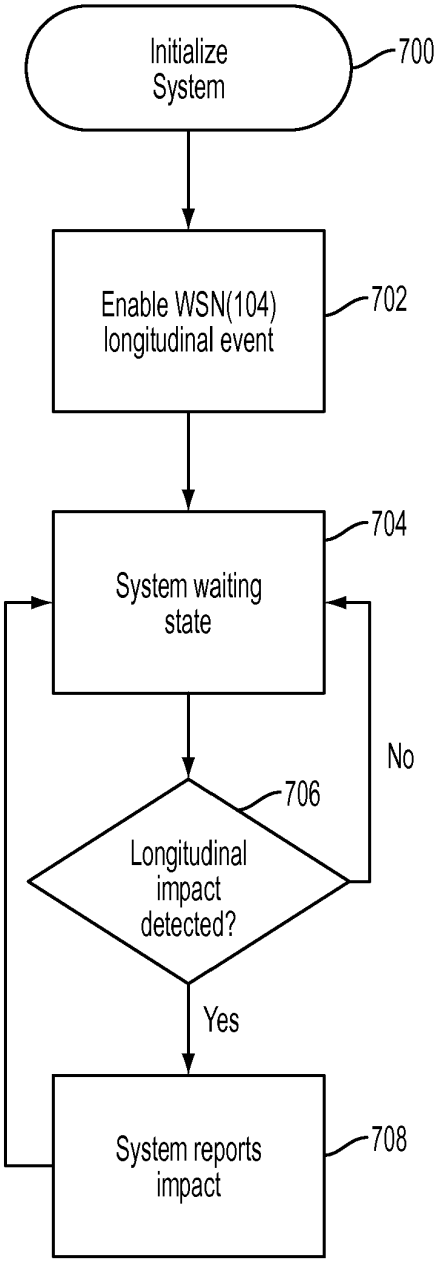
Initialize System
700
Enable WSN(104) longitudinal event
702
System waiting state
704
No
Longitudinal impact detected?
706
Yes
System reports impact
708

FIG. 7

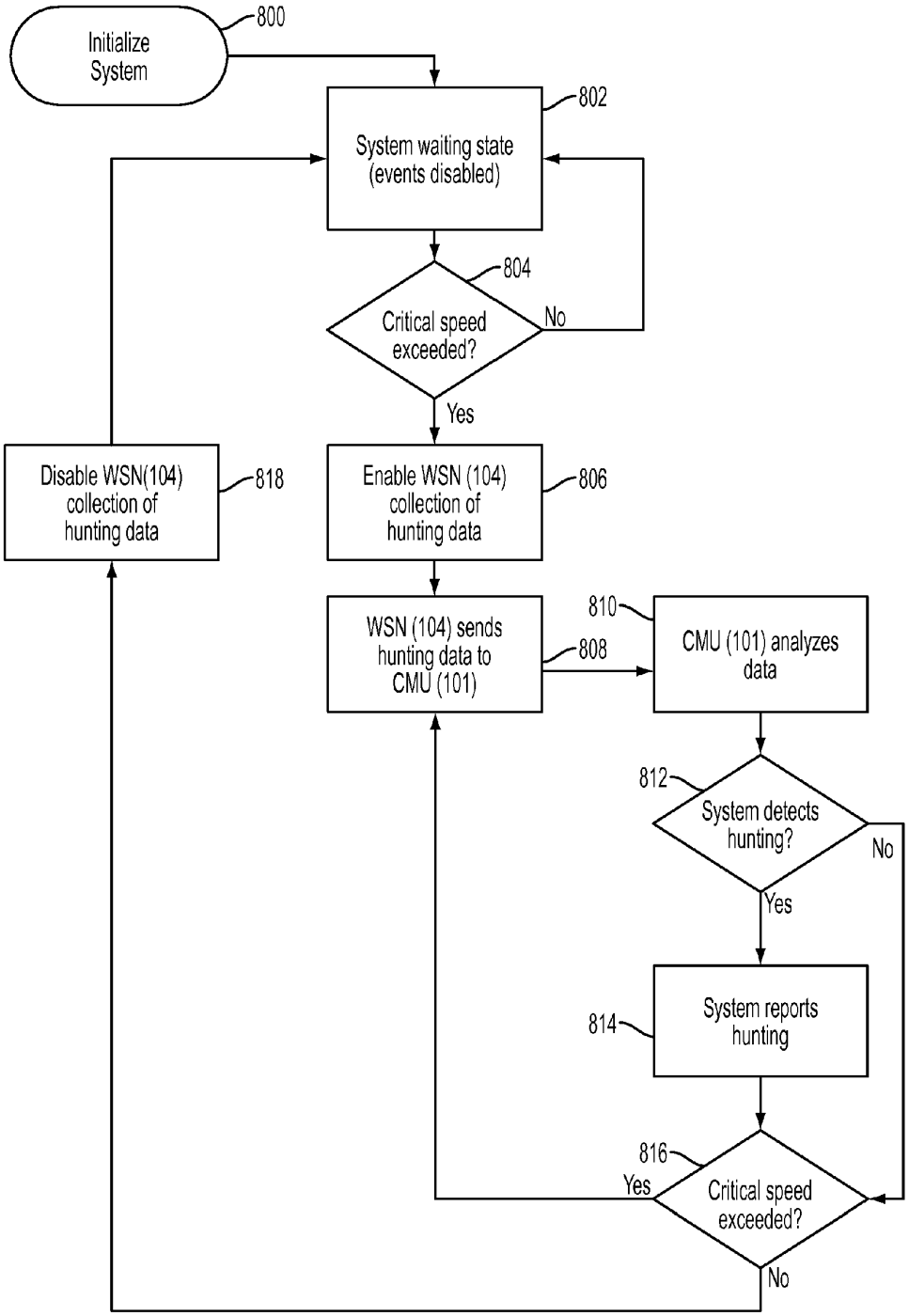
Initialize System
800
System waiting state (events disabled)
802
Critical speed exceeded?
804
No
Yes
Disable WSN(104) collection of hunting data
818
Enable WSN (104) collection of hunting data
806
WSN (104) sends hunting data to CMU (101)
808
CMU (101) analyzes data
810
System detects hunting?
812
No
Yes
System reports hunting
814
Critical speed exceeded?
816
Yes
No

FIG. 8

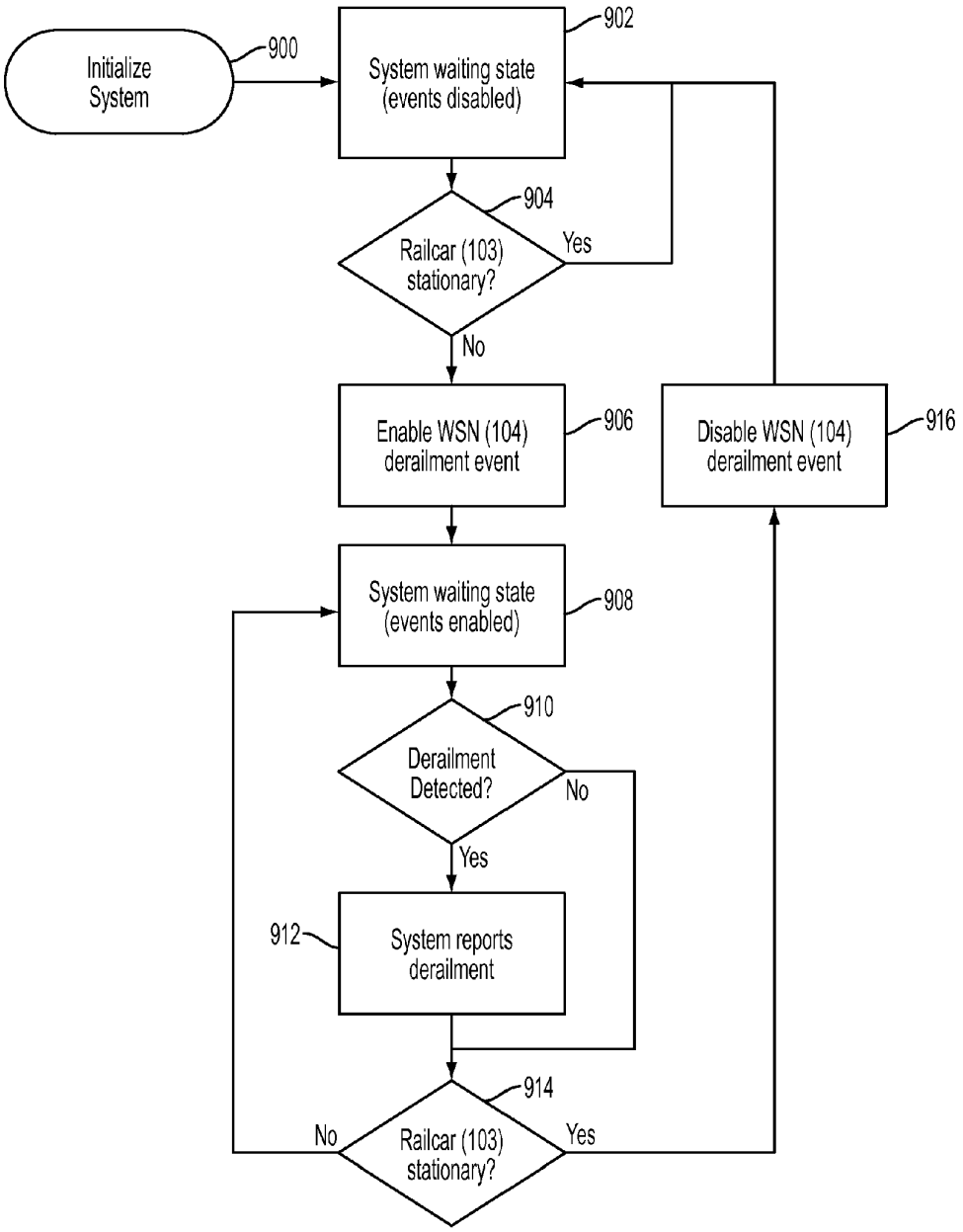
Initialize System
900
System waiting state (events disabled)
902
Railcar (103) stationary?
904
Yes
No
Enable WSN (104) derailment event
906
Disable WSN (104) derailment event
916
System waiting state (events enabled)
908
Derailment Detected?
910
No
Yes
System reports derailment
912
Railcar (103) stationary?
914
No
Yes

FIG. 9

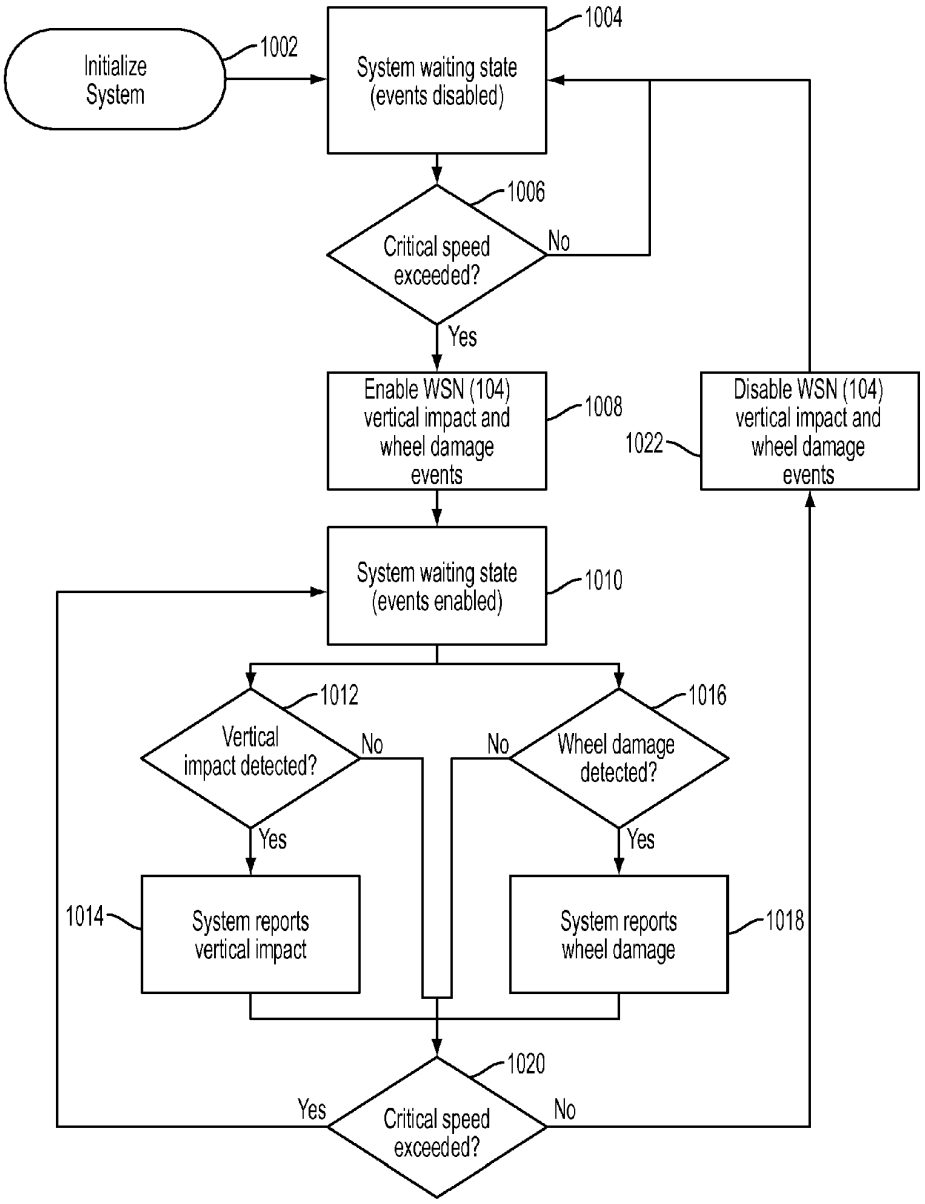
Initialize System
1002
System waiting state (events disabled)
1004
Critical speed exceeded?
1006
No
Yes
Enable WSN (104) vertical impact and wheel damage events
1008
Disable WSN (104) vertical impact and wheel damage events
1022
System waiting state (events enabled)
1010
Vertical impact detected?
1012
No
Yes
Wheel damage detected?
1016
No
Yes
System reports vertical impact
1014
System reports wheel damage
1018
Critical speed exceeded?
1020
Yes
No

FIG. 10

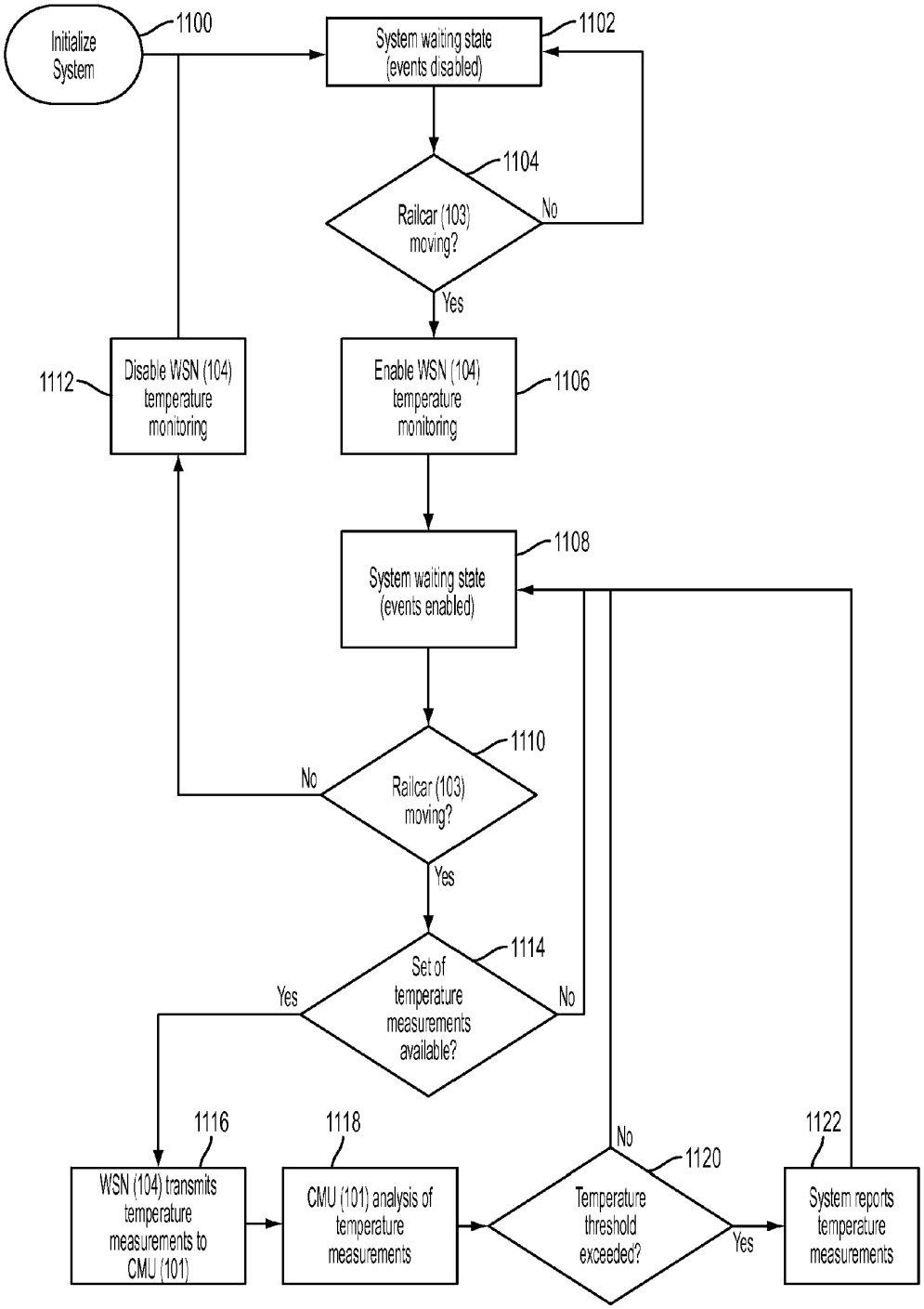
Initialize System
1100
System waiting state (events disabled)
1102
Railcar (103) moving?
1104
No
Yes
Disable WSN (104) temperature monitoring
1112
Enable WSN (104) temperature monitoring
1106
System waiting state (events enabled)
1108
Railcar (103) moving?
1110
No
Yes
Set of temperature measurements available?
1114
Yes
No
WSN (104) transmits temperature measurements to CMU (101)
1116
CMU (101) analysis of temperature measurements
1118
Temperature threshold exceeded?
1120
No
Yes
System reports temperature measurements
1122

FIG. 11

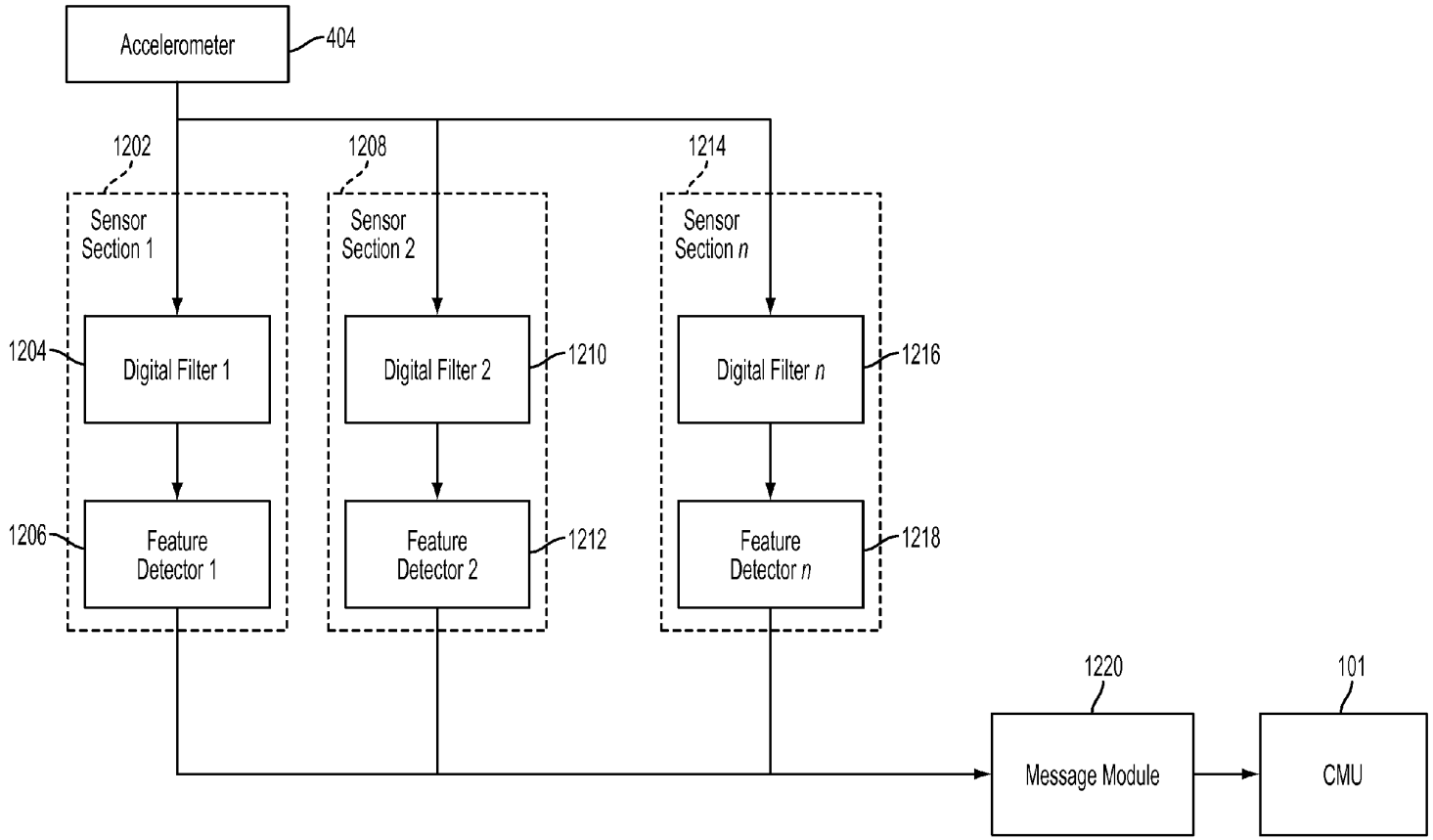
Accelerometer
404
1202
Sensor Section 1
1204
Digital Filter 1
1206
Feature Detector 1
1208
Sensor Section 2
Digital Filter 2
1210
Feature Detector 2
1212
1214
Sensor Section n
Digital Filter n
1216
Feature Detector n
1218
1220
Message Module
101
CMU

FIG. 12

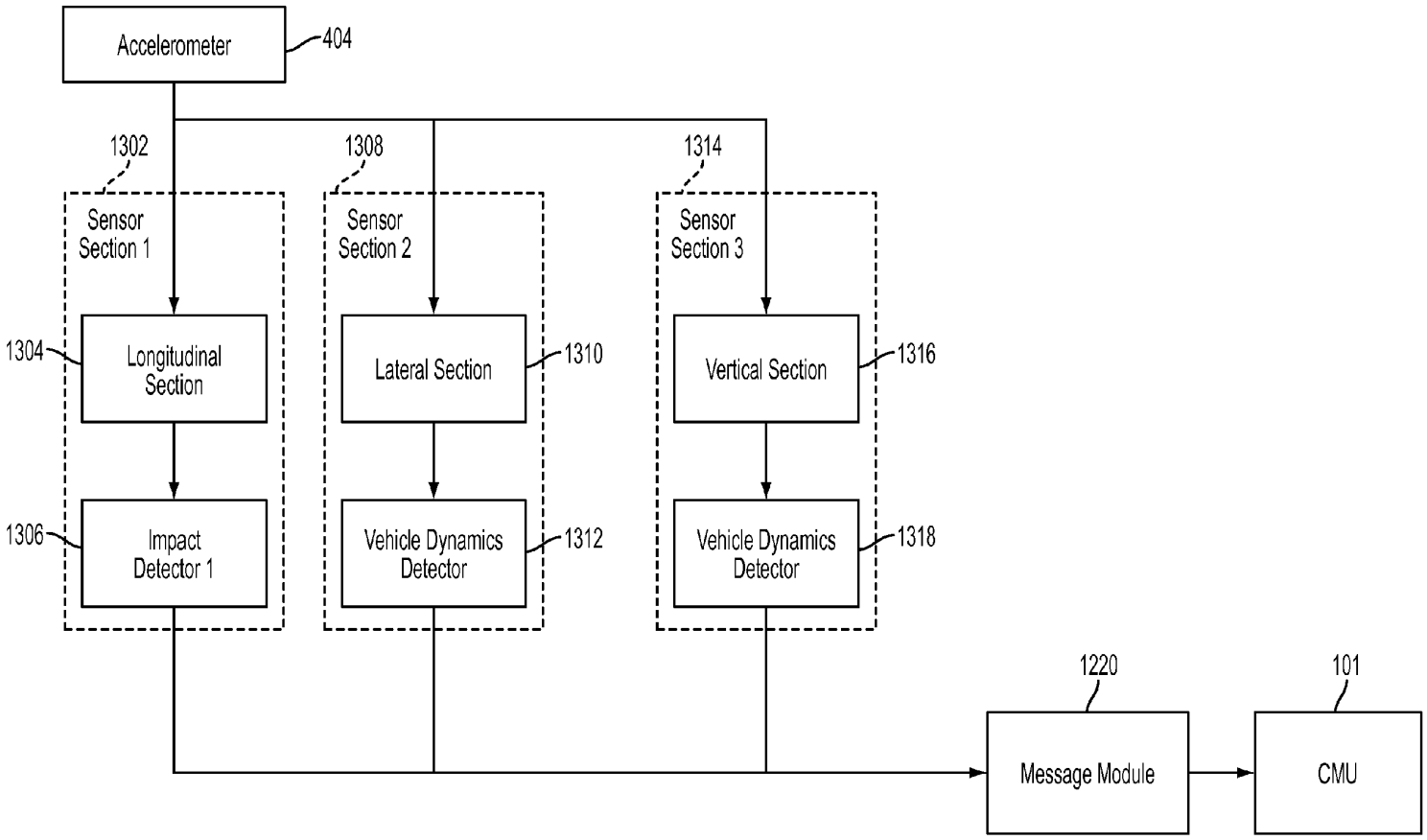
Accelerometer
404
1302
Sensor Section 1
1304
Longitudinal Section
1306
Impact Detector 1
1308
Sensor Section 2
Lateral Section
1310
Vehicle Dynamics Detector
1312
1314
Sensor Section 3
Vertical Section
1316
Vehicle Dynamics Detector
1318
1220
Message Module
101
CMU

FIG. 13

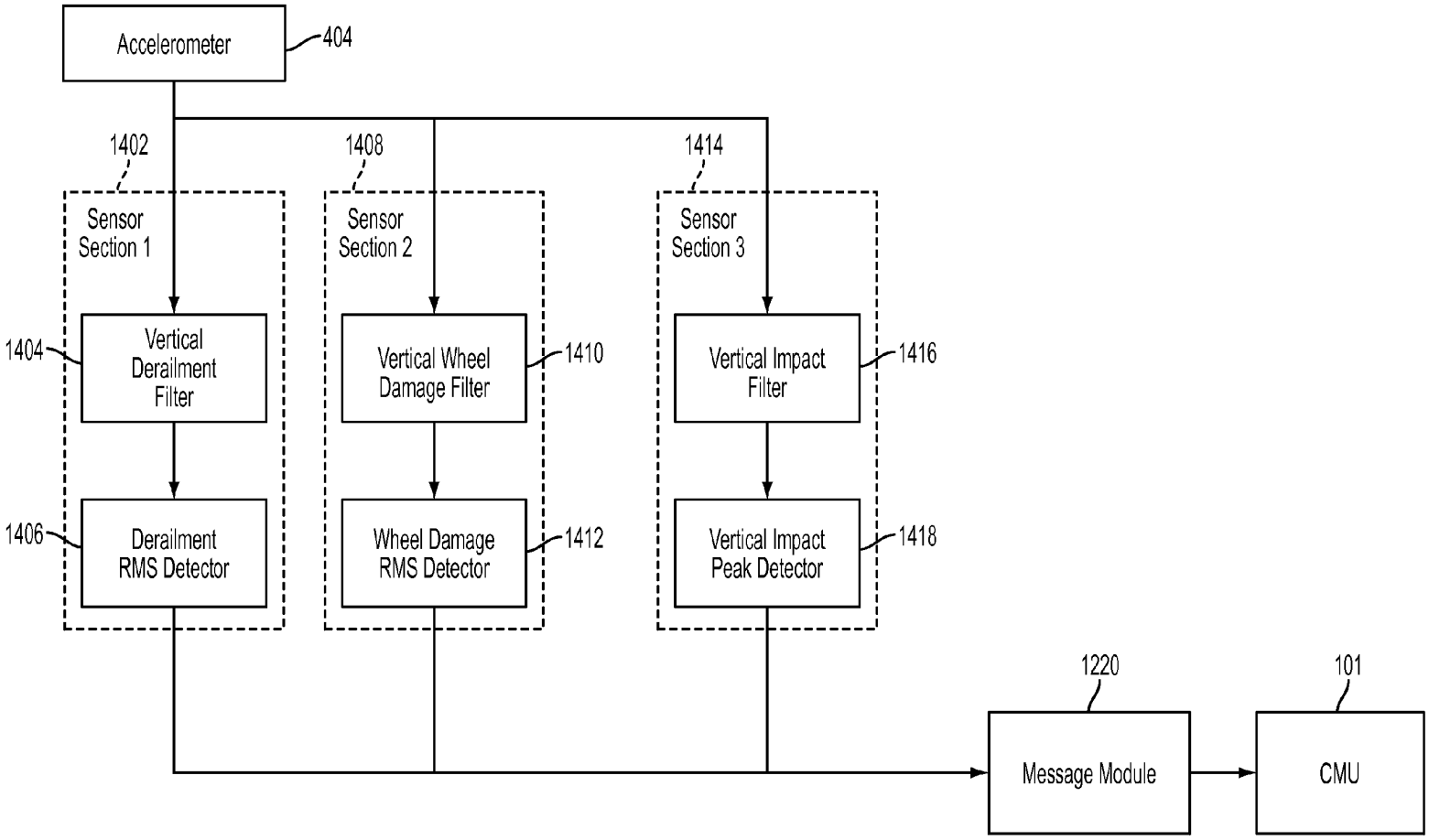
Accelerometer
404
1402
Sensor Section 1
1404
Vertical Derailment Filter
1406
Derailment RMS Detector
1408
Sensor Section 2
Vertical Wheel Damage Filter
1410
Wheel Damage RMS Detector
1412
1414
Sensor Section 3
Vertical Impact Filter
1416
Vertical Impact Peak Detector
1418
1220
Message Module
101
CMU

FIG. 14

SYSTEM AND METHOD FOR DETECTING OPERATIONAL ANOMALIES IN TRAIN CONSISTS AND RAILCARS

RELATED APPLICATIONS

The application claims the benefit of U.S. provisional application 61/920,700, filed Dec. 24, 2013, the entirety of which is hereby incorporated herein by reference.

FIELD OF THE INVENTION

The present invention relates to the field of railcar and train safety management, and is specifically directed to a system and method for continuously collecting and analyzing operational parameters of railcars and train consists to detect anomalous operating conditions.

BACKGROUND OF THE INVENTION

Current prior art monitoring of bearings and wheel to rail interactions on train consists has been managed primarily through the use of wayside detectors located throughout the rail system, which includes detectors for monitoring the temperature of railcar wheel bearings, and wheel impact load detectors which identify damaged wheels by monitoring impacts of wheels on the rails. These detectors are installed at fixed points in the rail network.

Since their introduction, these methods have provided railroad operators with information to improve railcar and train consist performance. However, these detectors lack the benefits of a wireless network capable of transmitting information and data regarding operational anomalies, such as when a railcar derails, the condition of the bearings and wheels when not in range of detectors, and wheel damage. Further, these prior methods do not provide a mechanism to continuously monitor assets at any location in the rail network.

Wheel damage in the railroad industry is responsible for significant maintenance costs related to the railcar wheels, railcar body, railcar components, rail tracks and rail ties. Wheels that are slid flat have an uneven section on the wheel where it comes into contact with the rail. As the wheel rotates this section creates an abnormal impact pattern, which can cause further damage to the wheel, damage to the railcar and damage to the rail and track structure.

Presently, however, there is no reliable system for continuously monitoring the temperature of wheel bearings or wheel to rail interactions where a wheel impact load detector is not installed on a section of rail or in the area between detectors. Accordingly, it is desirable to provide a system and method for the real-time, on-board monitoring of various operational parameters of a railcar and/or train consists, and for analyzing the readings in real time to predict or timely detect anomalous operational conditions.

SUMMARY OF THE INVENTION

The system presented herein addresses the deficiencies in prior art monitoring systems for railcars and train consists. The system consists of a hierarchical arrangement of components which provide a distributed data analysis capability that is capable of detecting operational anomalies at various levels of the hierarchy, and which provides for the flow of data, events and alerts to a central point.

At the lowest level of the hierarchy, each railcar is equipped with multiple wireless sensor nodes (referred to in the singular as a "WSN"), which are arranged in a mesh network controlled by a communication management unit ("CMU"), usually on the same railcar, referred to herein as a railcar-based mesh network. The wireless sensor nodes collect data regarding various operational parameters of the railcar and are capable of detecting certain anomalies based on the collected data. When anomalous operational data is detected, an alert may be raised and the data may be communicated to the communication management unit located on the railcar. Although mesh networks are used in the embodiments illustrated herein, other types of network topologies may be used.

The communication management units located on each railcar are also arranged in a mesh network which is controlled by a powered wireless gateway, typically located in the locomotive. This is referred to herein as a train-based mesh network. Again, although mesh networks are used in the embodiments illustrated herein, other types of network topologies may be used.

The train-based wireless mesh network communicates the length of the train consist and delivers information about the railcars to a powered host or control point, such as the locomotive or an asset with access to a power source and to a railroad remote operations center.

BRIEF DESCRIPTION OF THE DRAWINGS

The present invention will be more fully and completely understood from a reading of the Detailed Description of the Invention in conjunction with the drawings, in which:

FIG. **1** is a schematic of a railcar **103** equipped with a communication management unit (CMU) **101** and a plurality of wireless sensor nodes (WSNs) **104** installed thereon, forming a railcar-based mesh network **105**.

FIG. **2** is a schematic of a train-based mesh network with two railcars **103** each equipped with a CMU **101** and multiple WSNs **104**, a railcar **103** equipped with just a CMU **101** (no WSNs), a railcar **103** without a CMU or WSN, and a powered wireless gateway device **102** installed on a locomotive **108**.

FIG. **3** shows a train-based mesh network **107** and various means of communicating data off-train.

FIG. **4** is an exploded view of a first variety of WSN **104** which can be used, for example, for monitoring bearing temperature and wheel acceleration.

FIG. **5** is an exploded view of a second variety of WSN **104** which can be used, for example, for monitoring railcar body acceleration, and which can include a temperature sensor (not shown) for monitoring temperature.

FIG. **6** shows the WSN **104** of FIG. **4** installed on a railcar wheel bearing fitting **111**.

FIG. **7** is a flow chart showing the conditions under which longitudinal impact acceleration event processing is enabled and disabled.

FIG. **8** is a flow chart showing the conditions under which vertical and lateral hunting acceleration event processing is enabled and disabled.

FIG. **9** is a flow chart showing the conditions under which derailment monitoring event processing is enable and disabled.

FIG. **10** is a flow chart showing the conditions under which wheel damage or vertical impact event processing is enabled and disabled.

FIG. **11** is a flow chart showing the conditions under which bearing temperature event processing is enabled and disabled.

FIG. **12** is an architectural diagram showing a generalized model for implementation of the data analysis portion of a WSN **104**.

FIG. **13** is a specific implementation of the model shown in FIG. **12** directed to detection of railcar body events.

FIG. **14** is another specific implementation of the model shown in FIG. **12**, this one directed to detection of wheel bearing events.

DETAILED DESCRIPTION OF THE INVENTION

A railcar, as the term is used herein, may be a single railcar **103**, see FIG. **1**, or may consist of two or more railcars **103** which are permanently connected, often referred to by those of skill in the art as a "tandem pair", "three-pack", "five-pack", etc.

A train consist, shown in the drawings as reference number **109**, see FIG. **2**, is defined as a connected group of railcars **103** and locomotives **108**.

A communication management unit ("CMU"), shown in the drawings as reference number **101**, is preferably located on a railcar **103** and controls the railcar-based mesh network **105** (defined below) overlaid on railcar **103** which may consist of one or more individual railcars **103** which are permanently connected together. The CMU **101** hardware preferably includes a processor, a power source (e.g. a battery, solar cell, energy harvester, or internal power-generating capability), a global navigation satellite system (GNSS) device such as a global positioning system ("GPS") receiver, Wi-Fi, satellite, and/or cellular capability, a wireless communications capability for maintaining the railcar-based mesh network **105**, wireless communication with a train-based mesh network **107** and, optionally, one or more sensors, including, but not limited to, an accelerometer **404**, gyroscope, or temperature sensor **406**.

The CMU **101** supports one or more WSNs **104** (defined below) in a mesh network configuration using open standard protocols, such as the IEEE 2.4 GHz 802.15.4 radio standard. Additionally, the CMU **101** is also a member of a train-based mesh network **107**, which consists of the CMUs **101** from all enabled railcars **103** in the train consist **109**, controlled by a powered wireless gateway **102**, typically located on a locomotive **108**. The CMU **101** thus supports four functions: 1) to manage a low-power railcar-based mesh network **105** overlaid on a railcar **103**; 2) to consolidate data from one or more WSNs **104** in the railcar-based mesh network **105** and to apply logic to the data gathered to generate warning alerts to a host such as a locomotive **108** or remote railroad operations center **120**; 3) to support built-in sensors, such as an accelerometer **404**, within the CMU **101** to monitor specific attributes of the railcar **103** such as location, speed, and accelerations, and to provide an analysis of this data to generate alerts; and 4) to support bi-directional communication upstream to the host or control point, such as a locomotive **108** and/or an off-train monitoring and remote railroad operations center **120**, and downstream to one or more WSNs **104**, located on the railcar **103**. CMUs **101** may communicate wirelessly to a powered wireless gateway (PWG **102** as defined below) in a mesh network configuration, or may be configured to communicate through a wired connection, for example, through the ECP (electronically controlled pneumatic) brake system. Those skilled in the art will appreciate that GPS is just one form of a global navigation satellite system (GNSS). Other types of GNSS include GLONASS and BeiDou with others in development. Accordingly, although GPS is used in the embodiments described herein, any type of GNSS system or devices may be used.

The CMU **101** is capable of receiving data and/or alarms from one or more WSNs **104** and is capable drawing inferences from this data or alarms regarding the performance of railcar **103**, and of transmitting data and alarm information to a remote receiver. The CMU **101** is preferably a single unit that would serve as a communications link to other locations, such as a powered wireless gateway **102** (preferably located in locomotive **108**), or a remote railroad operations center **120**, and have the capability of processing the data received. The CMU **101** also communicates with, controls and monitors WSNs **104** in the local railcar-based mesh network **105**.

A powered wireless gateway ("PWG"), shown in the drawings as reference number **102** (see, e.g., FIG. **2**), is preferably located on a locomotive **108** or elsewhere on a train consist **109** where there is a source of external power. It typically will include a processor; a GPS receiver; one or more sensors, including, but not limited to, an accelerometer **404**, gyroscope, or temperature sensor **406**; a satellite and or cellular communication system; local wireless transceiver (e.g. WiFi); an Ethernet port; a high capacity mesh network manager and other means of communication. The PWG **102** will have power supplied by the locomotive **108**, if located on a powered asset, such as a locomotive **108**, or will derive its power from another source, for example, from a solar power generator or from a high-capacity battery. The PWG **102** controls a train-based mesh network **107** overlaid on a train consist **109**, consisting of multiple CMUs **101** from each railcar **103** in a train consist **109**.

The components and configuration of the PWG **102** are similar to that of a CMU **101**, with the exception that the PWG **102** typically draws power from an external source, while the CMU **101** is self-powered. Additionally, the PWG **102** collects data and draws inferences regarding the performance of the train consist **109**, and train-based mesh network **107**, as opposed to CMUs **101**, which draw inferences regarding the performance of individual railcars **103** and railcar-based mesh network **105** or **118**.

A railcar-based mesh network shown in the drawings as reference number **105**, see, e.g., FIGS. **1** and **2**, consists of a CMU **101** on a railcar **103**, which is part of and manages a railcar-based mesh network **105** of a plurality of WSNs **104**, each deployed, preferably on the same railcar **103**.

A wireless sensor node ("WSN"), shown in the drawings as reference number **104**, see, e.g., FIGS. **1** and **2**, is located on a railcar **103**, and provides the functions of collecting data from internal sensors and analyzing the data collected from the sensors to determine if the data needs to be transmitted immediately, held for later transmission, or aggregated into an event or alert. The WSN **104** is used for sensing a parameter to be monitored (e.g. temperature of bearings or ambient air) or status (e.g., position of a hatch or hand brake). In a preferred embodiment, each WSN **104** is equipped with one or more accelerometers or gyroscopes and one or more temperature sensors. Examples of WSNs **104** are disclosed in published U.S. patent application 2013/0342362, the disclosure of which is hereby incorporated by reference herein. A typical WSN **104** is shown in exploded view in FIG. **4** and FIG. **5** and will now be explained in more detail.

With reference to FIG. **4**, an example of a first variety of WSN **104** is now described. The WSN **104** shown in FIG. **4** is configured and tuned to detect certain kinds of acceleration and temperature events and is typically located on

the wheel bearing fitting **111** of railcar **103**, where it is likely to be subjected to various degrees of accelerations and where it can easily collect data regarding the temperature of the wheel bearing. The components of WSN **104** are contained in a housing **400** having an enclosure **400***a* and an enclosure base **400***b*. Preferably, housing sections **400***a*, **400***b* are composed of a hard plastic resistant to environmental damage, such as a UV rated polymer, e.g., a polycarbonate/ABS blend, and when fully assembled is weatherproof. After the various components are installed within the housing as described below, a potting material (not shown) is provided through openings in the housing **400** to isolate, encapsulate and environmentally seal the components within. Such materials include epoxies, polyurethanes and silicone compounds. A flexible urethane suitable for electrical use and through which wireless signals can be transmitted is preferred. It has been found that the particular potting material used is also critical in the proper tuning of the WSN **104** to detect various types of accelerations. A potting material having a durometer of 59 Shore 00 is preferred.

Additionally, a mechanical filter **410** consisting of upper sections **410***a* and lower sections **410***b* further serve to mechanically filter high and low frequency types of accelerations that are considered noise and which are preferably removed from the signal of interest. Preferably, these components are composed respectively of silicone of durometer 70 Shore A (the upper filter sections **410***a*) and 30 Shore A (the lower filter sections **410***b*) in view of the differences of the surface areas of each section and this affect on the filtering characteristics.

In a preferred embodiment, each WSN **104** may have one or more accelerometers **404** and one or more temperature sensors **406**. The tuning of WSN **104** is accomplished by a combination of the selection of the potting material, the durometer of upper and lower silicone mechanical filtering elements **410***a* and **410***b*, and software filtering performed by software executing on a processor on main PC board **402***a*. The software filter used is a digital filter to decrease noise from unwanted acceleration frequencies and increase signals from acceleration frequencies of interest.

Temperature sensor **406**, includes a heat transfer element which extends through an opening **406***a* in the enclosure base **400***b*, and opening **406***b* in the filter section **410***b*. Preferably, the heat transfer element is a copper plug. This configuration is preferred for monitoring the surface temperature of the surface to which WSN **104** is attached, as the heat transfer element will make contact with the surface. In preferred embodiments of the invention, the temperature sensor **406** is a thermistor, thermocouple or silicone temperature sensor which are ideal for electronic circuits. In this embodiment, WSN **104** will be mounted to place the heat transfer element in thermal communication with the portion of the railcar **103** for which a temperature reading is desired. Additionally, the lower sections **410***b* of the mechanical filter are of a suitable thickness to create an air gap between the enclosure base **400***b* and the surface to which the WSN **104** is mounted. The lower sections **410***b* of the mechanical filter and the air gap create good thermal protection and low heat transfer from the surface to which the WSN **104** is mounted. This thermal protection keeps the electronics (all except for the temperature sensor **406**) and the power source from being exposed to excess and potentially damaging heat. WSN **104** may also be equipped with additional temperature sensors (not shown) for sensing the ambient temperature.

In the preferred embodiment, self-taping screws **415** serve to attach WSN **104** to the railcar **103** and to hold upper and lower portion **410***a* and **410***b* of mechanical filter in place. Spacers **400***c* which fit within the screw openings **410***c* of the filter pads are chosen in length to control the amount of compression force on the filter sections **410***a* and **410***b* due to the tightening of the screws **415**. Without the spacers **400***c*, the filtering characteristics of the filters could be changed due to compression from over tightening of the screws **415**. The spacers are chosen from a suitably stiff material.

As one of ordinary skill would recognize, the configuration of WSNs **104** may vary with respect to the number and types of sensors. Virtually any type of sensor could be used, including, for example, a temperature sensor **406**, a pressure sensor, a load cell, a strain gauge, a hall effect sensor, a vibration sensor, an accelerometer **404**, a gyroscope, a displacement sensor, an inductive sensor, a piezio resistive microphone or an ultrasonic sensor, depending on the specific operational parameter that is desired to be monitored. In addition, the sensor may be a type of switch, including, for example, reed switches and limit switches. An example of another type of mote sensor which uses a strain gauge, e.g. a hand brake monitor sensor, is described in U.S. patent publication 2012/0046811 (U.S. patent application Ser. No. 12/861,713 filed Aug. 23, 2010), the disclosure of which is hereby incorporated herein by reference.

Electrical circuitry is provided for the operation of WSN **104**. The electrical circuitry includes the components and wiring to operate and/or receive and process the signals from the sensors. This can include, but is not limited to, analog and digital circuitry, CPUs, processors, circuit boards, memory, firmware, controllers, and other electrical items, as required to operate the accelerometers and temperature sensors **406** and to process the information as further described below.

In the illustrated embodiment in FIG. **4**, the circuitry includes a main board **402***a* which includes the communications circuitry, antennae and microprocessor and a daughter board **402***b* which includes circuitry to read the data from accelerometers **404** and temperature sensors **406**. Main board **402***a*, daughter board **402***b* or the sensors may also include a processor executing firmware to provide intelligence sufficient to perform low-level analysis of the data, and may accept parameters from outside sources regarding when alarms should be raised, as described below.

Each WSN **104** also includes circuitry for wireless communications and a long-term power source **414** (e.g. a battery, solar cell, energy harvester, or internal power-generating capability), preferably a military grade lithium-thionyl chloride battery. The circuitry also provides power conditioning and management functions and may include a feature to conserve battery life which keeps WSN **104** in a standby state and periodically wakes WSN **104** to deliver readings from the sensors.

FIG. **5** shows an exploded view of a second variety of WSN **104**, which is preferably mounted on the body of railcar **103**. The variety of WSN **104** shown in FIG. **5** is substantially identical to the variety shown in FIG. **4** (and thus similar elements are identified with the same reference number), with the following differences. First, as this variety of WSN **104** will be mounted to the body of railcar **103**, where it is likely to be subjected to more gentle accelerations, there is no need for the additional mechanical filtering provided by mechanical filters **410** of FIG. **4**. Thus, using four screws, two on each side, and given that this WSN is not exposed to the more violent accelerations of the other

variety, the screws or bolts of this second variety can be smaller in diameter. Second, the illustrated embodiment does not include a temperature sensor **406**, although one or more temperature sensors **406** may be provided with a heat transfer element, as discussed above for the first variety, extending through an opening in the housing to sense the desired temperature, e.g., the ambient temperature. Lastly, although this variety of WSN **104** includes an accelerometer **404** like the prior described WSN **104** of FIG. **4**, it preferably will be programmed with different firmware to detect different types of acceleration events, as discussed below. As understood by one of ordinary skill, the WSNs of both varieties could also contain just a temperature sensor, although there would be no need for filtering as described with reference to FIG. **4**.

Individual WSNs **104** are mounted on the areas of interest on a railcar **103**. As an example, FIG. **6** shows WSN **104** of the type shown in FIG. **4** mounted to a roller bearing fitting **111** of a railcar wheel bearing of a railcar **103**. The unit may be attached using a thermally conductive epoxy adhesive between the heat transfer element and the roller bearing fitting **111** to ensure good heat transfer to the temperature sensor **406**, and mechanical fasteners such as self-tapping screws **415** to hold WSN **104** in place.

System Operation

In broad terms, with reference to FIGS. **1** and **2**, the present invention provides a novel means for monitoring the performance and operation of a railcar **103** and train consist **109**. This includes a plurality of sensors **104** deployed on the railcars **103** in the consist **109** for sensing various operational parameters of the railcar **103** and distributed complex event processing (DCEP) engine, which is a hierarchical system for collecting and analyzing the data and for communicating data, events and alerts to a final destination where they can be acted upon.

The DCEP is responsible for implementing the intelligence used to draw conclusions based on the data collected from WSNs **104**, CMUs **101** and PWGs **102**. Preferably, the data processing platform is distributed among all WSNs **104**, CMUs **101** and the PWG **102** on the locomotive **108**, as well as utilizing a cloud-based infrastructure optimized to work closely with train-based mesh networks **107**, in conjunction with a variety of data streams from third-party providers or external sources.

With further reference to FIG. **1** of the drawings, a railcar-based mesh network is shown generally as reference number **105**. Railcar-based mesh network **105** comprises a CMU **101** installed on a railcar **103** and one or more WSNs **104** installed on the same railcar **103**. Railcar **103** may consist of one or more individual railcars **103**, which are permanently connected together. The railcar-based mesh network **105** is a critical component in the processing of events and alerts on the railcar **103**. CMU **101** and WSNs **104** work together to collect and analyze the data collected from sensors in the WSNs **104**. CMU **101** controls the railcar-based mesh network **105** on railcars **103** and is able to configure one or a more WSNs **104** in a local mesh network to transmit, listen, or sleep at precise times, or to change the parameters under which WSNs **104** operate and detect events.

With further reference to FIG. **2**, a schematic of a train-based mesh network **107** is shown with two railcars **103** each equipped with a CMU **101** and multiple WSNs **104** installed near the wheel bearings of the railcar **103**, a railcar **103** equipped with just a CMU **101** with no WSNs **104** attached, a railcar **103** without a CMU **101**, and a PWG **102** installed on a locomotive **108**. The CMU **101** and multiple WSNs **104** installed on railcars **103** form a railcar-based mesh network **105** and communicate with the PWG **102** on a host or control point, such as a locomotive **108** or other asset, forming the train-based mesh network **107**. The railcar-based mesh network for the railcar **103** having a CMU **101** only and no WSNs is designated **118**.

If an alert or event condition is detected by a WSN **104**, as described in more detail below, a message is forwarded by WSN **104** to CMU **101** for further analysis and action, for example, to confirm or coordinate alert or event conditions reported by one WSN **104** with other WSNs **104** in the railcar-based mesh network **105**. If an alert or event is confirmed by CMU **101**, a message is sent to PWG **102** installed on an asset, preferably with access to a power source and/or to an off train monitoring and remote railroad operations center **120**.

CMU **101** on each railcar **103** is capable of supporting an optional global navigation satellite system (GNSS) sensor to determine location, direction and/or speed of railcar **103**. This information can be used to determine whether or not WSNs **104** should be looking for certain types of events. For example, it is fruitless for a WSN **104** to attempt to detect derailments when the train consist **109** is stationary. Additionally, the PWG **102** can send instructions for the CMU **101** to start or stop looking for certain types of events. Additionally, CMU **101** on each railcar **103** is capable of using built-in sensors and/or managing a railcar-based mesh network **105** on the railcar **103** to generate messages that need to be sent to a host or control point, such as a locomotive **108**.

Alert and Event Detection and Reporting

Each WSN **104** is capable of analyzing the data collected from its sensors in determining if the an event or alert message, as well as the data should be uploaded to the next higher level in the hierarchy, in this case CMU **101**. With respect to accelerometers **404**, each WSN **104** can be programmed with multiple thresholds for peak and root mean square (RMS) level of magnitude values acceleration readings received from the one or more accelerometers **404**. When one of the peak or RMS acceleration thresholds are exceeded, it is an indication of a possible event or alert condition, and a message is generated and sent to CMU **101** in the same railcar-based mesh network **105**. The thresholds for each variety of WSN **104** may be dynamically programmed by commands either generated internally or received externally from CMU **101**.

In the preferred embodiment, WSNs **104** are programmed with thresholds which indicate specific types of alerts or events. For the WSNs **104** mounted on wheel roller bearing fittings **111**, these units may generate a possible derailment message, a vertical impact message or a wheel damage message depending upon the threshold which is exceeded. For WSNs **104** located on the body of railcar **103**, examples of messages generated are longitudinal impact, extreme lateral railcar dynamics, extreme vertical railcar dynamics, vertical hunting and lateral hunting. In the illustrated embodiments, the WSNs **104** do not determine if each of the possible conditions actually exists. This determination is preferably made at the next level up of the hierarchy, at CMU **101**, which utilizes the readings from multiple WSN **104** to make a determination that an actual event has occurred. As would be readily realized by one of skill in the art, different thresholds suggesting the occurrence of other types of events may be programmed into WSNs **104**.

Regarding the temperature sensors **406** in each WSN **104**, which are capable of sensing the temperature of the surface on which a WSN **104** is installed and/or the temperature of

ambient air around the WSN **104**, the temperature readings from each WSN are periodically reported to the CMU **101**. The CMU **101** must coordinate the collecting of temperature data from all WSNs **104** in the railcar-based mesh network **105** and, as such, the period for reporting of temperatures, as well as the timing of the reporting of temperature data is programmed for each WSN **104** by CMU **101**.

Each WSN **104** is able to make a determination of when to report data that may indicate a possible event or alarm condition to CMU **101**. CMU **101** is able to collect such notifications from each WSN **104** under its control and coordinate the data to make a final determination as to whether or not an event or alarm condition actually exists. For example, in the preferred embodiment each wheel roller bearing fitting **111** in a railcar **103** will have a WSN **104** attached thereto to monitor accelerations and temperature. Thus, on a typical railcar **103** having two trucks (bogies), each with two axles, a total of eight WSNs **104** mounted to wheel roller bearing fitting **111** will be present. In addition, and also in accordance with a preferred embodiment, each railcar **103** will preferably have an additional WSN **104** located at each end of the railcar **103** attached directly to the railcar body. CMU **101** also may include acceleration, temperature or any other type of sensors and may replace one or more of the WSN **104***s* on the body of railcar **103** or may be supplemental to the set of WSN **104***s* that are installed on the body of railcar **103**. The railcar-based mesh network **105** may include any combination of WSNs **104**, including a configuration wherein the CMU **101** is the only component installed on the railcar **103**. Additionally, CMU **101** may also monitor WSNs **104** installed on other railcars **103** such as in the case where railcar **103** may consist of one or more individual railcars **103** which are permanently connected together.

In the preferred embodiment, the logic in the CMU **101** is capable of analyzing both acceleration and temperature events received from each of the WSNs **104** under its control and determining if an alarm or event condition actually exists. It should be noted that acceleration events are independent of temperature events and the CMU **101** may be configured to either analyze only acceleration events, or to analyze only temperature events. Thus the CMU **101**, and WSNs **104** under its control, form a distributed event processing engine which is capable of determining various types of events.

The acceleration events which CMU **101** is capable of detecting in the preferred embodiment will now be discussed in greater detail. It should be noted that when CMU **101** determines that an alarm or event has occurred, a message is sent to the next level in the hierarchy that is either to a PWG **102** located elsewhere on train consist **109** or off train consist **109** to a remote railroad operation center **120**, depending upon the severity of the event and the need to immediately address the event, perhaps by altering the train consist's **109** operating condition. Examples of events that can be analyzed using the features described above are provided below.

Derailment—A derailment event is regarded as a high priority type of event and is an example of the type of events that can be analyzed by the illustrated embodiment. When a derail message is received from a WSN **104**, the CMU **101** starts a derailment processing timer and also immediately generates a possible derailment message to the PWG **102**. CMU **101** then waits to determine if any other WSNs **104** are generating derailment messages. If other WSNs **104** have generated derailment messages within a predetermined time interval, they are all presumed to have originated from the same physical event and a derailment message is generated and sent to PWG **102**.

FIG. **9** is a flow chart showing the conditions under which the derailment event is enabled or disabled. At **900**, the system is initialized and, at **902**, the system is placed in a waiting state in anticipation of the railcar **103** moving, wherein the derail event is disabled. It should be noted that derailment events are disabled when the railcar **103** is stationary. At **904**, the system checks to see if the railcar **103** is stationary and, if it is, it returns to the waiting state at **902**. If the railcar **103** is moving control moves to **906** where the derailment event is enabled. The derailment event is enabled by having CMU **101** send a message to each of the WSNs **104** under its control. At **908**, the system is again placed in a waiting state: however, the derailment event is now enabled. At **910**, the system queries as to whether a derailment has been detected and, if not, control proceeds to **914** where the system queries as to whether the railcar **103** is stationary. If the railcar **103** is moving, control returns to **908**, the system waiting state, having the derailment event enabled. If at **910** a derailment is detected, control proceeds to **912** where a system report of a derailment is made and control then proceeds to **914** as before. If, at **914**, it is determined that the railcar **103** is again stationary, the derailment event is disabled at **916** and control returns to **902**, where the system waits in a state where the derailment event is disabled.

Vertical Impact—A vertical impact message is regarded as a medium priority type of event. When a vertical impact event is received from a WSN **104**, CMU **101** starts a vertical impact processing timer during which CMU **101** waits to see if any other vertical impact events are received from other WSN **104***s*. Depending on which side of the railcar **103** vertical impact messages are being generated, it can be determined, for example, that a broken rail or other track condition may exist.

Wheel Damage—A wheel damage message is regarded as a low priority type of event. When a wheel damage event is received from a WSN **104**, CMU **101** starts to listen for additional wheel damage events from the same WSN **104**. Thus, if CMU **101** receives multiple wheel damage messages from the same WSN **104**, it can generate a wheel damage message. In such cases, CMU **101** may instruct WSN **104** to stop looking for wheel damage events as these will likely continue to recur and generate a barrage of messages from WSN **104** to CMU **101**. In addition, the WSN **104** will have a counter to determine if it is sending wheel damage messages to the CMU **101** at a certain rate. If that rate is exceeded, the WSN **104** stops checking for wheel damage messages for a certain time period. After the time period has expired, the WSN **104** will check to see if the rate of wheel damage messages are still too high to send to the CMU **101**.

FIG. **10** is a flow chart showing the conditions under which the wheel damage and vertical impact events are enabled or disabled. At **1002**, the system is initialized and, at **1004**, the system is placed in a waiting state wherein the events are disabled, as the critical speed required for event enablement has not yet been reached. Wheel damage and vertical impact events are only enabled when railcar **103** has reached a specific critical speed. Note that the speed of railcar **103** can be determined by several means, one preferred way is for a message to be sent from PWG **102** to all CMUs **101** in train consist **109**. At **1006**, the system checks to see if the critical speed has been reached or exceeded. The critical speed is a configurable setting of the system, typi-

cally set by each individual user, based on track and operational conditions, and is used to identify that the train is moving at a speed when such data is relevant. If not, control returns to **1004** where the system is again placed in a waiting state with the events disabled. If, at **1006**, the critical speed has been reached or exceeded, control proceeds to **1008** where both the vertical impact and wheel damage events are enabled. Control then proceeds to **1010**, where the system is placed in a waiting state having both types of events enabled. At **1012**, if a vertical impact event has been detected, control proceeds to **1014** where the system reports the vertical impact. At **1016**, the system checks to see if a wheel damage event has been detected and, if so, reports the wheel damage at **1018**. In any event, control then proceeds to **1020**, where the system checks to see if the railcar **103** is still at the critical speed necessary for the enablement of events. If it is, the system proceeds back to **1010** where the system is placed in a waiting state with events enabled. If the speed of railcar **103** has fallen below the critical speed, control proceeds to **1022** where both the vertical impact and wheel damage events are disabled, and then to **1004** where the system is placed in a waiting state with events disabled.

The proceeding acceleration events are all events which are detected by the variety of WSN **104** which is attached to the wheel roller bearing fitting **111** on railcar **103**. The following events are all generated by the variety of WSN **104** which is attached to the body of railcar **103**.

Longitudinal Impact—A longitudinal impact occurs when an acceleration is detected along the length of railcar **103**, and is regarded as a medium priority type of event. When a longitudinal impact message is received from a WSN **104**, the CMU **101** starts a timer during which it looks for other longitudinal impact events from other WSNs **104**. Longitudinal impact events are likely to occur, for example, during the coupling process and when the train consist **109** starts and stops. CMU **101** may coordinate with other CMUs **101** on other railcars **103** to determine if longitudinal impact events which are generated on each railcar **103** originate from the same physical event.

FIG. **7** is a flow chart showing the conditions under which longitudinal events are enabled. At **700**, the system is initialized and at **702** the longitudinal events are enabled. The control then proceeds to **704** where the system is placed in a wait state with the events enabled and enters a detection loop. At **706** the system determines whether a longitudinal impact has been occurred and, if not, returns to **704** where the system again enters the wait state. At **706**, if a longitudinal impact has been detected, control transfers to **708** where the system generates and reports a message regarding the impact. Control then returns to **704** where the system again enters the wait state.

Vertical Extreme Vehicle Dynamics—A vertical extreme vehicle dynamics event occurs when an acceleration is detected in the vertical direction of railcar **103**, and is regarded as a medium priority type of event. An event is detected by a peak acceleration threshold being exceeded by an acceleration along the vertical axis. When a vertical extreme vehicle dynamics message is received from a WSN **104**, the CMU **101** starts a timer during which it looks for other vertical extreme vehicle dynamics events from other WSNs **104**. Vertical extreme vehicle dynamics events are likely to occur, for example, from a subsidence in the track or change in track modulus at a bridge abutment. CMU **101** may coordinate with other CMUs **101** on other railcars **103** to determine if vertical extreme vehicle dynamics events which are generated on each railcar **103** originate from the same physical event.

Lateral Extreme Vehicle Dynamics—A lateral extreme vehicle dynamics event occurs when an acceleration is detected in the lateral, or cross line, direction of railcar **103**, and is regarded as a medium priority type of event. An event is detected by a peak acceleration threshold being exceeded by an acceleration along the lateral axis. When a lateral extreme vehicle dynamics message is received from a WSN **104**, the CMU **101** starts a timer during which it looks for other lateral extreme vehicle dynamics events from other WSNs **104**. Lateral extreme vehicle dynamics events are likely to occur, for example, from a subsidence in the track or change in track modulus at a bridge abutment. CMU **101** may coordinate with other CMUs **101** on other railcars **103** to determine if lateral extreme vehicle dynamics events which are generated on each railcar **103** originate from the same physical event.

Vertical Hunting—Vertical hunting is a condition that can last a long time with certain dynamic conditions such as track corrugation. The WSN **104***s* located on each end of the railcar **103** body are commanded to periodically check for vertical hunting simultaneously, which allows a phase comparison of the readings from each WSN **104**. When CMU **101** receives a vertical hunting message, a vertical hunting processing timer is started and CMU **101** waits to see if another WSN **104** has reported a vertical hunting event during a predetermined time interval. If multiple events are received within the time interval, CMU **101** examines the messages received and if the data indicates similar periodic oscillations at each end of the railcar **103**, then the phase relationship between events occurring at each end of the railcar **103** is determined. For an in phase oscillation, the CMU **101** generates a railcar "body bounce" event. When the data indicates out of phase oscillation, CMU **101** generates a railcar "body pitch" event. In both cases the vertical hunting message is reported by CMU **101**.

Lateral Hunting—Lateral hunting is a condition that can last a long time with certain dynamic conditions. Factors that contribute to lateral hunting include: high center of gravity railcars **103**, worn trucks (bogies), and worn tangent track. The lateral hunting event detection works in a fashion similar to the detection of the vertical hunting events. When CMU **101** receives a lateral hunting event from one of the WSNs **104***s* on one end of the railcar **103** (e.g., the front end), a timer is started and, if another event is received from another WSN **104** on the other end of the same railcar (e.g., the back end) within a predetermined period of time then the events are compared for their phase relationship. If the data indicates an out of phase oscillation, then a "body yaw" event is generated. However, if the data indicates an in phase oscillation a "body roll" event is generated. In either case, a lateral hunting message is reported by CMU **101**.

FIG. **8** is a flow chart showing the enabling, disabling, and reporting of vertical and lateral hunting events. At **800**, the system is initialized and, at **802**, the system is placed in a waiting state with the events disabled. Events, in this case, are disabled when the speed of railcar **103** is below a critical speed. Vertical and lateral hunting events are only enabled when the speed of railcar **103** exceeds the critical speed. At **804**, the system checks to see whether critical speed has been exceeded and, if not, returns to the system waiting state in **802**. However, if the critical speed has been exceeded, at **806**, the vertical and lateral hunting events are enabled and, at **808**, the system enters a loop wherein the hunting data is sent to CMU **101** and then analyzed to see if a hunting event has occurred. At **810**, CMU **101** analyzes the data and, at **812**, determines whether or not a hunting event has been detected. If a hunting event has been detected, control

proceeds to **814** where the event is reported. If no hunting event has been detected in **812**, control proceeds directly to **816** where the system again checks to see if the speed of railcar **103** is over the critical speed. If the speed of railcar **103** is still high enough for hunting events to be enabled, control returns to **808** and the system again enters the loop. If the speed of railcar **103** has fallen below the critical speed, control proceeds to **818**, where the hunting events are disabled, and then to **802**, where the system is placed in the waiting state with events disabled.

With reference to FIGS. **4** and **12**, a general implementation model of the analysis system of a WSN **104** is now described. As depicted in the preferred embodiment, the analyzed signal (what is not filtered out by the mechanical filter **410** or potting material), originates with accelerometer hardware **404** and is passed to one or more sensor sections **1202**, **1208** or **1214**. These sensor sections select the data to be analyzed using a digital data filter **1204**, **1210** or **1216**, and passes this data on to a feature detector **1206**, **1212** or **1218**. Data selection can be based on, for example, direction (e.g. vertical or longitudinal components), frequency (e.g. high-frequency clangs or low frequency rocking), overall magnitude (combination of 2 or 3 directional components), or other variations of the collected data.

The feature detectors may use a variety of techniques to determine if specific features are present. Features may include but are not limited to, pulse peaks or duration, root mean square (RMS) level of magnitude values, or presence or lack of specific frequency components. Once a feature is detected, a message is passed on to message module **1220** to be delivered to the CMU **101**. The sensor section may also perform periodic tests to determine if the feature is still present. If it is, the section can also determine if continued messages should be sent or if a message should be sent only when the feature is no longer present.

One possible implementation of the analysis system of FIG. **12** is shown in FIG. **13**. Here, accelerometer **404** passes data on to three sensor sections. The first section **1302** selects data from the longitudinal direction down the length of the railcar **103** and uses Longitudinal Section **1304** to extract longitudinal impact data. Longitudinal impacts are detected in Impact Detector **1306** when the peak value of the longitudinal data exceeds a longitudinal impact threshold. The second section **1308** selects data from the lateral direction across the railcar **103** and uses Lateral Section **1310** to extract lateral oscillation data. Lateral oscillations are detected in Vehicle Dynamics Detector **1312** when the RMS value of the oscillations exceeds a lateral oscillation threshold. The third section **1314** selects data from the vertical direction and uses Vertical Section **1316** to extract vertical oscillation data. Vertical oscillations are detected in Vehicle Dynamics Detector **1318** when the RMS value of the oscillations exceeds a vertical oscillation threshold. Each of these sensor sections sends its messages on to message module **1220** which, in turn, passes these messages on to the CMU **101**.

Another possible implementation of the analysis system is shown in FIG. **14**. Here, accelerometer **404** passes data on to three sensor sections. The first section **1402** looks at data from the vertical direction and uses Vertical Derailment Filter **1404** to extract the characteristic frequencies of a derailment. Derailment events are detected in Derailment RMS Detector **1406** when the RMS value of the filtered data exceeds a derailment threshold. The second section **1408** also selects data from the vertical direction, but uses Vertical Wheel Damage Filter **1410** to extract the characteristic frequencies of wheel damage. Wheel damage is detected in Wheel Damage RMS Detector **1412** when the RMS value of the filtered data exceeds a wheel damage threshold. The third section **1414** also selects data from the vertical direction and uses Vertical Impact Filter **1416** to extract vertical impact data. Vertical impacts are detected in Vertical Impact Peak Detector **1418** when the peak value of the filtered data exceeds a vertical impact threshold. Each of these sensor sections sends its messages on to message module **1220** which, in turn, passes these messages on to the CMU **101**.

When a derailment occurs, the wheels of one or more axles fall off the rails and run along the track bed. The rough nature of the track bed causes the derailed wheels to experience high-energy vertical accelerations for the duration of the derailment. In a preferred embodiment, a derailment is readily identified by calculating the RMS value of a series of consecutive vertical acceleration measurements and comparing the result with a threshold. If the CMU sees such data from the WSNs on both sides of the same axle, this could indicate a derailment. On the other hand, acceleration data from a single WSN regarding just one wheel processed through sensor section **1408** is more likely to indicate a damaged wheel.

CMU **101** also collects temperature data from each WSN **104**. The collection of temperature data from each WSN **104** must be synchronized to avoid conflicts between WSNs **104** while transmitting the data to CMU **101**, and to allow timely comparison and coordination of the temperature data from the readings from WSNs **104**. This is achieved by storing the temperature data in a rotating buffer organized as one data set comprising one reading from each WSN **104** temperature sensor **406**. In the preferred embodiment, each WSN **104** samples its temperature sensors **406** once per minute, four consecutive samples are averaged once every 4 minutes. The WSN **104** then sends a message containing 8 consecutive sample averages to the CMU **101** once every 32 minutes. CMU **101** keeps twenty samples in its rotating buffer for each temperature sensor **406**, however, one of skill in the art would realize that other sampling intervals and buffer sizes could be used. It should be noted that WSNs **104** may have more than one temperature sensor **406**. After each temperature message is received, the oldest set of data in the rotating buffer is discarded. When the data set is complete, the temperature data is examined for any significant temperature trends or events and then cleared so that the temperature data is used only once. As newer temperature messages are received, the buffer wraps around so that new data overwrites the oldest time slots. It should be noted that the WSNs **104** do not analyze the temperature data for specific events, but instead merely report it to the CMU **101**. The CMU **101** examines the temperature data for trends and reports when certain thresholds have been detected. It should be noted that the temperature analysis is only performed when the train consist **109** is moving and is disabled when the train consist **109** is stationary. Therefore, WSNs **104** will not collect or report temperature data unless the train consist **109** is moving.

The following table is a listing of the alarms and warnings generated by the statistical analysis performed by the CMU **101** on the temperature data.

Peak Analysis	Greater than x % of the temperature readings in the analysis statistics exceed the absolute temperature analysis threshold
Ambient Analysis	Greater than y % of temperature readings in the analysis statistics exceed the

-continued

	above ambient temperature analysis threshold
Rate Analysis	z % of the operational time exhibits a temperature rise exceeding the temperature rate analysis threshold

The variables x, y and z, in the above table indicate that these numbers are configurable depending on the preferences of the user or customer. As an example of a Peak Analysis operation, if x (as configured by the user, e.g., 20, 25 or 30) percentage of temperature readings on a bearing over a period of time exceed the absolute temperature analysis threshold, an alarm or warning may be sent. As an example of the usefulness of carrying out the different analyses, it is possible that the Ambient Analysis on a hot bearing, if the train is running in very hot weather conditions, might not indicate a problem when in fact there might be one, while the Peak Analysis which looks just at the bearing temperature will provide a warning or alarm. On the other hand, in very cold weather, the Peak Analysis may not indicate a problem with a hot bearing due to the cold weather cooling down the bearing, while the Ambient Analysis would. An example of Rate Analysis—when the railcar is not moving, a bad bearing will be at ambient temperature, but once the railcar starts moving, the bad bearing may heat up quicker than the other bearings on the railcar, and therefore will have a higher percentage of operational time it exceeds the threshold temperature rate.

As with acceleration events, WSNs **104** are also able to check for temperature events and report when the measured temperature exceeds certain thresholds. The table below lists these temperature-related alarms and events that can be provided immediately:

Peak Alarm	Absolute temperature alarm threshold is exceeded
Peak Warning	Absolute temperature warning threshold is exceeded
Ambient Alarm	Temperature above ambient alarm threshold is exceeded
Ambient Warning	Temperature above ambient warning threshold is exceeded
Differential Alarm	Temperature difference alarm threshold is exceeded between bearings on the same axle

The first four Alarms and Warnings in the above table are based on data preferably collected by individual WSNs and do not require any analysis other than the exceeding of a threshold and thus can be initiated by the WSN that collected the data. The last one, the Differential Alarm, requires data from at least two WSNs located on bearing fittings on opposite sides of an axle, and therefore the analysis and Alarm will preferably be carried out by the CMU.

FIG. **11** is a flow chart showing the processing of events related to the measurement of temperatures of the wheel bearings of railcar **103**. At **1100**, the system is initialized and, at **1102**, the system enters a waiting state wherein the temperature monitoring events are disabled. Events are disabled, in this case, when the railcar **103** is not moving. At **1104**, the system checks to see if the railcar is moving and, if not, returns to **1002** where it again enters the waiting state with events disabled. If the railcar is moving, control proceeds to **1106** where the temperature monitoring events are enabled. The system then proceeds to **1108** where it enters a loop wherein events are checked. Control proceeds to **110** where the system again checks to see make sure the railcar **103** is moving. If the railcar **103** is not moving, control proceeds to **1112** where the temperature monitoring events are disabled and then back to **1102** where the system is placed in a waiting state with events disabled. If, at **1110**, the railcar **103** is still moving, control proceeds to **1114** where the system checks to see if a set of temperature measurements are available. If not, control returns to **1108** where the system is in the waiting state with events enabled. If a set of temperature measurements is available in **1114**, control proceeds to **1116** wherein the WSN **104** transmits the set of temperature measurements to CMU **101**. At **1118**, CMU **101** performs an analysis of the temperature measurements, including all those in the rotating buffer and, in at **1120**, decides if a temperature threshold has been exceeded. If not, control returns to **1108** where the system is in a waiting state with events enabled. If a temperature threshold has been exceeded, the system reports the temperature measurements at **1122** and then returns to **1108** where it is again in the system waiting state with events enabled.

CMU **101** also detects long term trends and keeps data regarding trends in the analysis of bearing condition. The following statistics are collected for every bearing being monitored by a WSN **104** in the railcar-based mesh network **105**:

1. Total number of valid temperature readings;
2. Stun of valid temperature readings;
3. Sum of valid temperature readings squared;
4. Number of temperature readings greater than the absolute temperature threshold;
5. Number of temperature readings greater than the above ambient temperature threshold; and
6. Number of temperature change rates greater than the heating rate threshold.

The bearing temperature statistics are accumulated on a daily basis in a rotating buffer that can hold thirty-two sets of data, thus allowing trend analysis over a thirty-day period. The DCEP engine controls the time that statistics are accumulated as a new set of statistics has begun and the oldest is discarded. Normally the event engine is configured to generate an analysis once per day.

The collected statistics may be used to calculate information that indicates bearing wear trends. In a preferred embodiment, a CMU **101** provides a report upon request of the following quantities for every wheel bearing:

a. Average bearing temperature;
b. Variance of bearing temperature;
c. Percentage of bearing temperature readings that exceed an absolute threshold;
d. Percentage of bearing temperature readings above ambient that exceed a threshold; and
e. Percentage of measurements that the rate of increase of bearing temperature exceeds a threshold.

A train-based mesh network is shown generally as reference number **107** in FIGS. **2** and **3**. Train-based mesh network **107** is overlaid on a train consist **109** and includes a PWG **102** installed on a host or control point such as a locomotive **108**, or on another asset with access to a power source, and one or more CMUs **101**, each belonging to the train-based mesh network **107** and also to their respective railcar-based mesh networks **105**, if one or more WSNs **104** are present, or respective railcar-based mesh networks or network **118** for railcars **103** with a CMU **101** but no WSNs **104** (see FIG. **2**). (Note that there can also be railcars **103** in train consist **109** without a CMU **101** thereon, as shown by reference number **119** in FIG. **2**). Thus, here, CMUs **101** can belong to two mesh networks, railcar-based mesh network

105 (if railcar 103 is fitted with one or more WSNs 104) and train-based mesh network 107. Each CMU 101 is also optionally managing its respective railcar-based mesh network 105. FIG. 3 shows a case wherein the train-based mesh network 107 consists of three CMUs 101, two of which are part of railcar-based mesh networks 105, and one located on a railcar 103 (reference number 118) wherein no WSNs 104 are connected.

Train-based mesh network 107 uses an overlay mesh network to support low-power bi-directional communication throughout train consist 109 and with PWG 102 installed on locomotive 108. The overlaid train-based mesh network 107 is composed of wireless transceivers embedded in the CMU 101 on each railcar 103. Each CMU 101 is capable of initiating a message on the train-based mesh network 107 or relaying a message from or to another CMU 101. The overlay train-based mesh network 107 is created independently of, and operates independently of the railcar-based mesh networks 105 created by each railcar 103 in the train consist 109.

A bi-directional PWG 102 manages the train-based mesh network 107 and communicates alerts from the CMUs 101 installed on individual railcars 103 to the host or control point, such as the locomotive 108, wherein the alerts or event reports may be acted upon via human intervention, or by an automated system. Locomotive 108 may include a user interface for receiving and displaying alert messages generated by train-based mesh network 107 or any of the individual railcar-based mesh networks 105. Bi-directional PWG 102 is capable of receiving multiple alerts or events from CMUs 101 on individual railcars 103 and can draw inferences about specific aspects of the performance of train consist 109.

Bi-directional PWG 102 is also capable of exchanging information with an external remote railroad operations center 120, data system or other train management system. This communication path is shown in FIG. 3 as reference number 122, and can include cellular, LAN, Wi-Fi, Bluetooth, satellite, or other means of communications. This link can be used to send alerts off-train consist 109 when the train consist 109 is in operation.

It is appreciated that described above are novel systems, devices and methods. It is also understood that the invention is not limited to the embodiments and illustrations described above, and includes the full scope provided by the claims appended hereto.

We claim:

1. A system for detecting operational anomalies on a train consist or railcar comprising:
   (a) one or more communication management units mounted on one or more railcars;
   (b) one or more sensors located on said one or more railcars configured to sense an operational parameter of said one or more railcars, said sensors being in communication with said one or more communication management units, wherein the one or more sensors comprise one or more sensors configured to measure accelerations of the railcar; and
   (c) one or more filters configured to filter at least a portion of the accelerations,

   wherein said communication management units perform the functions of:
   (i) collecting data regarding said one or more railcar operational parameters;
   (ii) analyzing said collected data for trends or events indicative of an anomalous operational condition; and
   (iii) communicating a message to a remote receiver when said trend or event is detected.

2. The system of claim 1 further comprising one or more wireless sensor nodes in communication with one of said communication management units, said one or more sensors forming part of said one or more wireless sensor nodes;

   wherein each of said wireless sensor nodes is configured to:
   collect data from one or more sensors;
   compare said data against one or more rules; and
   send a message to said communication management unit when at least one of said rules is satisfied; and

   wherein said communication management unit and said wireless sensor nodes form a railcar-based wireless mesh network, said railcar-based mesh network being controlled by said communication management unit.

3. The system of claim 2 wherein one of said wireless sensor nodes comprises:
   a) a protective housing;
   b) said one or more sensors being mounted within said protective housing;
   c) a communication capability, for communicating with said communication management unit;
   d) a microprocessor, configured to execute firmware to control the operation of said wireless sensor node; and
   e) a mechanical filter which includes a resilient material selected to filter out undesirable accelerations, said mechanical filter disposed to remove said undesirable accelerations before said undesirable accelerations reach said accelerometer.

4. The system of claim 2 wherein one of said wireless sensor nodes comprises:
   a) a protective housing;
   b) said one or more sensors being mounted within said protective housing;
   c) a communication capability, for communicating with said communication management unit;
   d) a microprocessor, configured to execute firmware to control the operation of said wireless sensor node; and
   e) potting material disposed within said housing, said potting material configured to tune said wireless sensor node by absorbing undesirable accelerations.

5. The system of claim 2 wherein said communication management unit is configured to instruct each wireless sensor node to enable or disable the checking of individual rules by sending a message to said wireless sensor node.

6. The system of claim 2 wherein each of said wireless sensor nodes is configured to:
   a) collect data from one or more sensors; and
   b) periodically send said collected data to said communication management unit.

7. The system of claim 6 wherein said communication management unit is configured to instruct each wireless sensor node to enable or disable the periodic sending of data by sending a message to said wireless sensor node.

8. The system of claim 6 wherein said communication management unit, upon receiving said periodically sent data, is configured to:
   (a) store said data in a data store;
   (b) analyze said stored data for trends; and
   (c) generate a report when trends of interest are detected.

9. The system of claim 2 wherein said one or more rules are numerical thresholds which, when exceeded by said collected data, cause an alert message to be sent to said communication management unit.

10. The system of claim 2 wherein said communication management unit, upon receiving an alert message from one of said wireless sensor nodes, is configured to:

(a) wait to see if similar messages are received from one or more other wireless sensor nodes within a predetermined period of time and concluding that an actual event has occurred if said similar messages are received; and

(b) communicate a message reporting the occurrence of said actual event to a remote receiver.

11. The system of claim 10 wherein said communication management unit is configured to confirm that a lateral extreme vehicle dynamic event has occurred when lateral extreme vehicle dynamic messages have been received from a plurality of wireless sensors nodes within said predetermined period of time.

12. The system of claim 10 wherein said communication management unit is configured to confirm confirms that a vertical extreme vehicle dynamic event has occurred when vertical extreme vehicle dynamic messages have been received from a plurality of wireless sensors nodes within said predetermined period of time.

13. The system of claim 10 wherein said communication management unit is configured to confirm that vertical hunting is occurring when vertical hunting messages are received from wireless sensor nodes mounted on opposite ends of a railcar within a predetermined period of time.

14. The system of claim 13 wherein said communication management unit is configured to determine that a body bounce event has occurred when messages from said wireless sensor nodes indicate that vertical hunting messages received from said wireless sensor nodes indicate in phase accelerations were detected.

15. The system of claim 13 wherein said communication management unit is configured to determine that a body pitch event has occurred when messages from said wireless sensor nodes indicate that vertical hunting messages received from said wireless sensor nodes indicate out of phase accelerations were detected.

16. The system of claim 10 wherein said communication management unit is configured to confirm that lateral hunting is occurring when lateral hunting messages are received from wireless sensor nodes mounted on opposite ends of a railcar within a predetermined period of time.

17. The system of claim 16 wherein said communication management unit is configured to determine that a body yaw event has occurred when messages from said wireless sensor nodes indicate that lateral hunting messages received form said wireless sensor nodes indicate out of phase accelerations were detected.

18. The system of claim 16 wherein said communication management unit is configured to determine that a body roll event has occurred when messages from said wireless sensor nodes indicate that lateral hunting messages received form said wireless sensor nodes indicate in phase accelerations were detected.

19. The system of claim 1 further comprising a powered wireless gateway controlling a train-based wireless mesh network that includes said powered wireless gateway and a plurality of said communication management units.

20. The system of claim 19 wherein said powered wireless gateway serves as said remote receiver.

21. The system of claim 1 wherein at least one of said communication management units includes at least one of said sensors.

22. The system of claim 1 further comprising a powered wireless gateway configured to control a train-based network that includes said powered wireless gateway and a plurality of said communication management units.

23. The system of claim 1, wherein the one or more filters comprise one or more mechanical filters that include a resilient material configured to filter out undesirable accelerations from the accelerations, wherein the one or more mechanical filters are disposed to remove the undesirable accelerations before the undesirable accelerations reach the one or more sensors that are configured to measure accelerations.

24. The system of claim 1, further comprising one or more wireless sensor nodes in communication with at least one of the communication management units, wherein the one or more sensors form part of the one or more wireless sensor nodes, wherein one or more of the wireless sensor nodes comprise a protective housing, wherein the one or more sensors are mounted within the protective housing, wherein the protective housing comprises potting material configured to tune the wireless sensor nodes by absorbing at least a portion of undesirable accelerations.

25. The system of claim 1, further comprising one or more wireless sensor nodes in communication with at least one of the communication management units, wherein the one or more sensors form part of the one or more wireless sensor nodes, wherein one or more of the wireless sensor nodes comprises a microprocessor configured to execute firmware to control operation of the one or more of the wireless sensor nodes, wherein the firmware comprises one or more software filters configured to isolate one or more types of accelerations.

26. The system of claim 1, wherein the one or more filters comprise one or more mechanical filters.

27. The system of claim 1, wherein the one or more filters comprise one or more electronic filters.

28. The system of claim 1, wherein the one or more filters comprise one or more digital filters.

29. The system of claim 1 wherein said remote receiver is located off-train.

30. A method for detecting operational anomalies on a train consist or railcar comprising the steps of:

sensing, by one or more sensors located on one or more railcars, one or more operational parameters of the one or more railcars, wherein the one or more operational parameters comprise one or more accelerations of the one or more railcars;

filtering, by one or more filters, at least a portion of the accelerations; and

by one or more communication management units associated with the one or more railcars:

collecting data regarding said one or more railcar operational parameters;

analyzing said collected data for trends or events indicative of an anomalous operational condition; and

communicating a message to a remote receiver when said trend or event is detected.

31. The method of claim 30 wherein

said data is collected from one or more wireless sensor nodes on said railcar, said wireless sensor nodes being in communication with said communication management unit and comprising one or more of the sensors; and

wherein said communication management unit and said one or more wireless sensor nodes form a railcar-based mesh network.

32. The method of claim 31 wherein said wireless sensor nodes are each configured to:

(a) collect data from one or more sensors;

(b) compare said data against one or more rules; and

(c) send a message to said communication management unit when at least one of said rules is satisfied; and

wherein said one or more rules causes data collected from some sensors to be periodically sent to said communication management unit.

33. The method of claim **32** wherein said communication management units are configured to coordinate messages from two or more wireless sensor nodes to confirm that an event has occurred.

34. The method of claim **31** wherein multiple railcars in said train consist are configured with a communication management unit and further wherein all communication management units on said train consist are configured in a train-based wireless mesh network controlled by a powered wireless gateway.

35. A system for detecting operational anomalies on a train consist or railcar comprising:

(a) a train-based mesh network comprising a powered wireless gateway and one or more communication management units located on one or more railcars in said train consist;

(b) one or more railcar-based mesh networks each comprising at least said one or more communication management units, each arranged in a mesh network configuration with one or more wireless sensor nodes;

(c) a distributed event processing engine that executes within the said wireless sensor nodes, said communication management units and said powered wireless gateway, said distributed event processing engine detecting anomalous operating conditions on said train consist via data gathered by sensors controlled by said wireless sensor nodes and propagated upwards through said system.

36. A system for detecting operational anomalies on a railcar that is part of a train consist comprising:

(a) at least one communication management unit (CMU) mounted on the a railcar in said train consist;

(b) at least two sensors located on the said railcar for configured to sense operational parameters of the railcar, said sensors being in communication with said communication management unit, wherein the one or more sensors comprise one or more sensors configured to measure accelerations of the railcar; and

(c) one or more filters configured to filter at least a portion of the accelerations,

wherein said communication management unit performs the following functions:

(i) receiving data from said sensors;

(ii) drawing inferences from the data received from at least two of the sensors regarding the performance of the railcar; and

(iii) communicating a message to a remote receiver when an anomaly is detected.

37. The system of claim **36**,

wherein said sensors comprise accelerometers positioned at different locations of the railcar,

wherein said step of drawing inferences comprises the comparison of data from two or more of said accelerometers,

wherein said accelerometers are positioned on the railcar to provide data for carrying out one or more of the following functions:

i) compare accelerations from one railcar wheel with that of another railcar wheel on the same axle but opposite side of the railcar,

ii) compare accelerations from one railcar wheel with that of at least one other wheel on the same side of said railcar, and

iii) compare accelerations from one railcar wheel with that of at least one other railcar wheel on the same side of said one railcar wheel and which other wheel is on another railcar of the same train consist.

* * * * *