UNITED STATES DISTRICT COURT
WESTERN DISTRICT OF TEXAS
WACO DIVISION

Greenthread, LLC *Plaintiff*, *v*. Intel Corporation; Dell Inc.; and Dell Technologies Inc. *Defendants*.	Civil Action No. 6:22-cv-105-ADA JURY TRIAL DEMANDED

GREENTHREAD'S SUR-REPLY CLAIM CONSTRUCTION BRIEF

TABLE OF CONTENTS

TABLE OF AUTHORITIES ii

TABLE OF EXHIBITS iii

EXEMPLARY CLAIMS 195:1 & 842:1 v

DISPUTED CLAIM CONSTRUCTIONS vi

AGREED CLAIM CONSTRUCTIONS viii

I. INTRODUCTION 1

II. DISPUTED CLAIM TERMS 2

A. Claim Terms Found in Exemplary Claim 195:1 2

1. "surface layer" terms (195:1; 502:7; 222:44) 2

2. "substrate" (195:1; 502:7; 842:1, 9; 481:1, 20; 222:1, 21, 39, 41, 42, 44; 014:1, 21) 7

3. "active region" (195:1; 502:7; 842:1, 9; 481:1, 20; 222:1, 21, 39, 41, 42, 44; 014:1, 21) 8

4. "unidirectional electric drift field" terms (195:1; 502:7; 222:44) 10

5. "to aid the movement" terms (195:1; 502:7; 842:1, 9; 481:1, 20; 222:1, 21, 39, 41, 42, 44; 014:1, 21) 11

6. "well region" (195:1; 502:7; 842:1, 9; 481:1, 20; 222:1, 21, 39, 41, 42, 44; 014:1, 21) 16

B. Claim Term Found in Exemplary Claim 842:1 16

7. "active region…within which transistors can be formed" (842:1, 9; 481:1, 20; 222:1, 21, 39, 41, 42; 014:1, 21) 16

III. CONCLUSION 17

TABLE OF AUTHORITIES

Page(s)

CASES

ActiveVideo Networks, Inc. v. Verizon Communications, Inc.,
694 F.3d 1312 (Fed. Cir. 2012).....9

Baxalta Inc. v. Genentech, Inc.,
972 F.3d 1341 (Fed. Cir. 2020).....11

CFL Techs. LLC v. Osram Sylvania, Inc.,
No. 18-1445-RGA, 2022 WL 606329 (D. Del. Jan. 21, 2022).....12

Cies Bisker, LLC v. 3M Co.,
2009 U.S. Dist. LEXIS 110055 (E.D. Tex. Nov. 25, 2009).....4

Collins v. Western Digital Techs., Inc.,
2011 U.S. Dist. LEXIS 108973 (E.D. Tex. Sept. 23, 2011).....3, 4

Enzo Biochem, Inc. v. Applera Corp.,
599 F.3d 1325 (Fed. Cir. 2010).....14

GCP Applied Techs., Inc. v. AVM Indus., Inc.,
No. CV-19-7475-MWF, 2021 U.S. Dist. LEXIS 146446 (C.D. Cal. Aug. 4, 2021).....16

Multiform Dessicants, Inc. v. Medzam Ltd.,
133 F.3d 1473 (Fed. Cir. 1998).....16

Nautilus, Inc. v. Biosig Instruments, Inc.,
572 U.S. 898 (2014).....3, 5

NTP, Inc. v. Research in Motion, Ltd.,
418 F.3d 1282 (Fed. Cir. 2005).....9

Sonix Tech. Co. v. Publ'ns Int'l, Ltd.,
844 F.3d 1370 (Fed. Cir. 2017).....12

STATUTES

35 U.S.C. § 112.....1

TABLE OF EXHIBITS[1]

Exhibit	Description
1	Declaration of Dr. Konstantinos P. Giapis ("Giapis declaration")
2	U.S. Patent No. 8,421,195 to G.R. Mohan Rao (GREENTHREAD-WDTX-000027-000040) ("195 patent")
3	U.S. Patent No. 10,510,842 to G.R. Mohan Rao (GREENTHREAD-WDTX-000070-000084) ("842 patent")
4	Excerpts from Chen, J. Y., CMOS Devices and Technology for VLSI, Prentice-Hall (1990) (GREENTHREAD-WDTX-007426–007682) ("Chen")
5	*Greenthread, LLC v. Samsung Elecs. Co., Ltd.*, No. 2:19-cv-00147-JRG, Dkt. 67 (Claim Construction Memorandum Opinion and Order), E.D. Tex. Apr. 20, 2020 (GREENTHEAD-WDTX-002761-002792) ("EDTX *Markman* Order")
6	*Samsung Elecs. Co., Ltd. v. Greenthread, LLC*, IPR2020-00289, Ex. 1003 (Apr. 14, 2020) (GREENTHREAD-WDTX-003869–003959) ("Smith declaration")
7	The American Heritage Dictionary of the English Language, Third Edition (2002), at 1792 (defining "substrate") (GREENTHREAD-WDTX-007794–007797)
8	Excerpts from Webster's Third New International Dictionary of the English Language Unabridged, Merriam-Webster, Inc. (1992) (GREENTHREAD-WDTX-002826–002834, GREENTHREAD-WDTX-007793)
9	Excerpts from Baker, R. J., CMOS Circuit Design, Layout, and Simulation, IEEE (1998) (GREENTHREAD-WDTX-002674–002715) ("Baker")
10	Defendants' Preliminary Claim Constructions, No. 6:22-cv-105-ADA (W.D. Tex.) (served Sept. 19, 2022)
11	File History of U.S. Patent No. 10,510,842 (GREENTHREAD-WDTX-001059-1246) ("842 file history")
12	Excerpts from Howe, R. T., Microelectronics: An Integrated Approach, Prentice-Hall (1997) ("Howe") (GREENTHREAD-WDTX-002793–2813)
13	Excerpts from Wolf S., Silicon Processing for the VLSI Era Volume 2: Process Integration, Lattice Press (1990)
14	Excerpts from Wolf S., Silicon Processing for the VLSI Era Volume 3: The Submicron MOSFET, Lattice Press (1995) (GREENTHREAD-WDTX-002877–2883)

[1] When possible, Greenthread has cited to the exhibits previously attached to Defendants' Opening Claim Construction Brief (Dkt. 82) and Greenthread's Responsive Claim Construction Brief (Dkt. 96). Unless otherwise indicated, all docket numbers refer to the present case, *Greenthread, LLC v. Intel Corp. et al.*, No. 6:22-cv-105-ADA (W.D. Tex.), and all citations to page numbers of CM/ECF documents refer to the page number at the top of the page in the CM/ECF header.

15	U.S. Patent No. 7,071,129 (GREENTHREAD-WDTX-007798-007802)
16	U.S. Patent No. 11,275,201 (GREENTHREAD-WDTX-007803-007820)

EXEMPLARY CLAIMS 195:1 & 842:1

Term	U.S. Patent No. 8,421,195, Claim 1 (195:1)
1	A CMOS Semiconductor device comprising: a **surface layer**;
2	a **substrate**;
3	an **active region** including a source and a drain, disposed on one surface of said surface layer;
4 5	a single drift layer disposed between the other surface of said surface layer and said substrate, said drift layer having a graded concentration of dopants extending between said surface layer and said substrate, said drift layer further having a first static **unidirectional electric drift field** **to aid the movement of minority carriers from said surface layer to said substrate**; and
6	at least one **well region** disposed in said single drift layer, said well region having a graded concentration of dopants and a second static unidirectional electric drift field to aid the movement of minority carriers from said surface layer to said substrate.

Term	U.S. Patent No. 10,510,842, Claim 1 (842:1)
7	A semiconductor device, comprising: a substrate of a first doping type at a first doping level having first and second surfaces; a first **active region** disposed adjacent the first surface of the substrate with a second doping type opposite in conductivity to the first doping type and **within which transistors can be formed**; a second active region separate from the first active region disposed adjacent to the first active region and within which transistors can be formed; transistors formed in at least one of the first active region or second active region; and at least a portion of at least one of the first and second active regions having at least one graded dopant concentration to aid carrier movement from the first surface to the second surface of the substrate.

DISPUTED CLAIM CONSTRUCTIONS

#	Claim(s)	Terms[2]	Greenthread	Defendants
1	195:1 502:7 222:44	"surface layer" and related terms	Plain and ordinary meaning, where the plain and ordinary meaning is "a layer at the surface"	Indefinite
2	195:1 502:7 842:1, 9 481:1, 20 222:1, 21, 39, 41, 42, 44 014:1, 21	"substrate"	Plain and ordinary meaning, where the plain and ordinary meaning is an "underlying layer"	"the initial material within which or on which the semiconductor device is fabricated"
3	195:1 502:7 842:1, 9 481:1, 20 222:1, 21, 39, 41, 42, 44 014:1, 21	"active region"	Plain and ordinary meaning	**Original:** "region that forms the current path of a device" **New:** "the source, drain, and channel region of a device"
4	195:1 502:7 222:44	"said [drift layer further/well region …] having a [first/second] static unidirectional electric drift field"	Plain and ordinary meaning	"said [drift layer further/well region …] having a [first/second] static electric drift field that is unidirectional over the [drift layer/well region"
		"said [drift layer further/well region] having a graded concentration of dopants generating a [first/second] static unidirectional electric drift field"		"said [drift layer further/well region] having a graded concentration of dopants generating a [first/second] static electric drift field that is unidirectional over the [drift layer/well region]"

[2] All 7 terms were identified by Defendants.

DISPUTED CLAIM CONSTRUCTIONS (continued)

#	Claim(s)	Terms	Greenthread	Defendants
5	195:1 502:7 842:1, 9 481:1, 20 222:1, 21, 39, 41, 42, 44 014:1, 21	"to aid the movement of minority carriers from ... to …"	Plain and ordinary meaning	Indefinite Alternative construction: "to sweep the minority carriers from … to …
		"to aid carrier movement from ... [to/towards]"		Indefinite Alternative construction: "to sweep the carriers from … [to/towards] …
6	195:1 502:7 842:1, 9 481:1, 20 222:1, 21, 39, 41, 42, 44 014:1, 21	"well region"	Plain and ordinary meaning, where portions of a well are not well regions.	"A well, whether formed by single or multiple implants. Portions of a well are not well regions."
7	842:1, 9 481:1, 20 222:1, 21, 39, 41, 42 014:1, 21	"active region … within which transistors can be formed"	Plain and ordinary meaning	Indefinite

AGREED CLAIM CONSTRUCTIONS

#	Claim(s)	Terms	Agreed Construction
8	842:1, 9 481:1, 20 222:1, 21, 39, 41, 42 014:1, 21	"a substrate of a first doping type"	"a substrate with either p-type doping or n-type doping"
9	842:1, 9 481:1, 20 222:1, 21, 39, 41, 42 014:1, 21	"disposed adjacent"	Plain and ordinary meaning
10	842:7, 15 481:6, 26 222:6, 27 014:6, 27	"isolation region"	Plain and ordinary meaning

I. INTRODUCTION

As the old adage goes, if the facts and law are on your side, argue the facts and law; otherwise make lots of noise. Defendants do the latter in their Reply Brief (Dkt. 100). Rather than learning from the *Samsung* litigation and Judge Gilstrap's *Markman* Order, Defendants crafted new arguments that were not "fully baked." Realizing the shortcomings of those arguments, Defendants now advance another round of arguments that were not in its Opening Brief (Dkt. 82). These arguments are equally flawed and should also be rejected.

When arguing indefiniteness, Defendants ignored the facts and misapplied the law. For example, Defendants initially argued the "active region" *must* be on top of the "surface layer." Now that Greenthread has dispelled this misreading of the claims, Defendants argue Dr. Rao failed to specify the *exact* dimensions of the "surface layer." But implementation-specific details, like the thickness of a layer, are not required by 35 U.S.C. § 112. To argue otherwise would mean the unfathomable result that thousands of patents (including Defendants' own patents) are also invalid.

When arguing prosecution disclaimer for the "unidirectional" terms, Defendants misrepresented what Dr. Rao said about Kamins. Now Defendants make much ado about the middle layer in Kamins. But there is no disputing that there is ***no*** layer in Kamins that aids movement of minority carriers ***from*** the surface layer ***to*** the substrate. Therefore, there was no reason for Dr. Rao to limit his invention, as Defendants wrongly suggest. No matter what Defendants argue, they cannot possibly meet the high bar for prosecution disclaimer.

For the remaining terms, Defendants coined self-serving definitions that clearly stray from the plain meaning of those terms. For example, Defendants argue the "substrate" *must* be the "initial matter," even though the specification says the opposite. For "active region," Defendants pretend to side with Greenthread, but then read in so-called "clarifications." The Court should be wary of these arguments, and give all of the terms the full scope of their plain meaning.

II. DISPUTED CLAIM TERMS

For terms 1, 5, and 7, Defendants cannot prove by clear and convincing evidence that they are indefinite. Dr. Rao used "surface layer" consistent with its ordinary meaning to mean a "layer at the surface." He explained how the graded dopants create an electric field that "aids the movement" of the minority carriers from the "surface layer" to the substrate. And an "active region" is a region "within which transistors can be formed." These terms are not indefinite and they should be given their plain and ordinary meaning.

For term 4, Defendants have not met the high bar for prosecution history disclaimer. Kamins does not teach a "unidirectional electric drift field" that moves minority carriers *from the surface layer to the substrate*. Dr. Rao's claims were clearly patentable over Kamins and there was no reason for Dr. Rao to limit the scope of his claims to a single field over the entire layer.

For terms 2, 3, and 6, Defendants seek to introduce self-serving extraneous limitations that will only confuse the jury. A "substrate" does not have to be the "initial matter"; an "active region" does not have to be electrically active; and it is not necessary to specify the number of implants in a "well region." There is nothing in the intrinsic record that mandates these limitations. Accordingly, these terms should be given the full scope of their plain meaning.

A. Claim Terms Found in Exemplary Claim 195:1

1. "surface layer" terms (195:1; 502:7; 222:44)

Greenthread	Defendants
Plain and ordinary meaning, where the plain and ordinary meaning is "a layer at the surface"	Indefinite

In its Opening Brief, Defendants made the misstep of arguing the "active region" must be on top of the "surface layer." Dkt. 82, 11. But this illogical argument is at odds with the claim language, specification, preferred embodiment, prosecution history, and how "surface layer" is

ordinarily used in the art (and even Defendants' own patents). Faced with this reality, Defendants make a new argument that Dr. Rao did not specify the "depth" of the surface layer. Dkt. 100, 9.

To put everything in perspective, there is no dispute where the "surface" is. Common sense tells you that a "surface layer" is a layer at this surface, and the intrinsic record and extrinsic evidence confirms this. The only argument that Defendants have left is that Dr. Rao did not specify the *exact* dimensions of this "surface layer." But the Supreme Court made it clear in *Nautilus* that "patents are 'not addressed to lawyers, or even the public generally,' but to those skilled in the relevant art." *Nautilus, Inc. v. Biosig Instruments, Inc.*, 572 U.S. 898, 899 (2014) (internal citation omitted). And the definiteness standard "recogniz[es] that absolute precision is unattainable." *Id.* at 910. This is especially true in the field of semiconductors where microscopic layers are measured in micrometers, or even nanometers. The exact dimensions of the "surface layer" will depend on the specific implementation or application. Dr. Rao cannot reasonably be expected to specify the exact dimensions for every "surface layer" across every application. Dr. Rao did, however, specify that the active region is located inside the surface layer. This indicates the relative size of the surface layer. A POSITA would have readily recognized that in an older device where the source and drain are measured in micrometers, the "surface layer" would also be measured in micrometers, whereas in a newer, miniaturized device the "surface layer" would likely be measured in nanometers. These are implementation-specific details that will depend on the particular application. A POSITA would have recognized that Dr. Rao's invention does not depend on a specific "depth," as long as the other claim limitations are met (*e.g.*, the graded dopants aid the movement of minority carriers from the surface layer to the substrate).

Courts have routinely recognized that claims are not indefinite merely because the specification does not specify the thickness of a particular layer or region. For example, in *Collins*

v. Western Digital Techs., Inc., the patents-in-suit related to microscopic nanometer films used for coating objects to improve resistance to wear. No. 2:09-cv-219-TJW, 2011 U.S. Dist. LEXIS 108973, at *6 (E.D. Tex. Sept. 23, 2011). More specifically, some of the asserted claims related to creating a visual appearance called "Newton's rings of interference." *Id*. at *8. Much like here, the defendants argued the asserted claims were indefinite because the patent did not specify the "form or shape of the material" that creates the appearance of rings. *Id*. at *27. Judge Ward disagreed, recognizing that the particular form or shape will depend on a number of factors, and the claims do not require "a specific thickness of the film" as long as it creates the claimed visual appearance. *Id*. at *28. The same is true here. The claims do not require the "surface layer" to be a "particular form or shape," as long as the other claim limitations are met.

Similarly, in *Cies Bisker*, the defendants argued "transparent protective coating" "would be indefinite without a limitation that the thickness be 5 millimeters or more." *Cies Bisker, LLC v. 3M Co.*, 2009 U.S. Dist. LEXIS 110055, at *8-9 (E.D. Tex. Nov. 25, 2009). But Magistrate Judge Craven disagreed, recognizing the functionality of the claim element does not depend on a "specific thickness," but whether it achieves the claimed function. *Id.* at *15 ("[T]he functionality of the claim's transparent protective coating is not dependent on a specific thickness but whether it protects the print from foot traffic or the like."). The same is true here. Dr. Rao's invention does not depend on a "specific thickness" of the "surface layer" as long as it achieves the claimed function of aiding the movement of the minority carriers from the surface layer to the substrate.

Even a cursory review of Defendants' patents reveals they have used the term "surface layer" to mean "a layer at the surface." *See, e.g.*, Ex. 15 (U.S. Patent No. 7,071,129), 2:9-11 (*see* reference numeral 14 in Fig. 3); Ex. 16 (U.S. Patent No. 11,275,201), 7:49-55 (*see* reference numeral 404 in Fig. 4). Furthermore, the specifications of Intel and Dell's patents ***never*** indicate

any dimensions for the claimed "surface layers." Ex. 15, 2:44-46; Ex. 16, 14:1. It is rather hypocritical that Defendants want to hold Dr. Rao to a higher standard than their own patents. If *Nautilus* required such details, then it would have the unfathomable effect of invalidating thousands of patents, including Intel and Dell's.

In their Reply Brief, Defendants try to cast shade on Greenthread's positions as "newly minted." Dkt. 100, 9-10. But there is nothing "newly minted" about Greenthread's positions. Greenthread has consistently identified in its infringement contentions that the "surface layer" is a layer at the surface. *See, e.g.*, Dkt. 38-9 (195 patent claim chart), 49-50. And Greenthread's identification of the "surface layer" in Fig. 5B as the "blue region" (Dkt. 96, 21) should come as no surprise since it was Samsung (not Greenthread) that created the following figure and identified the "surface layer" as the ***exact*** same region.

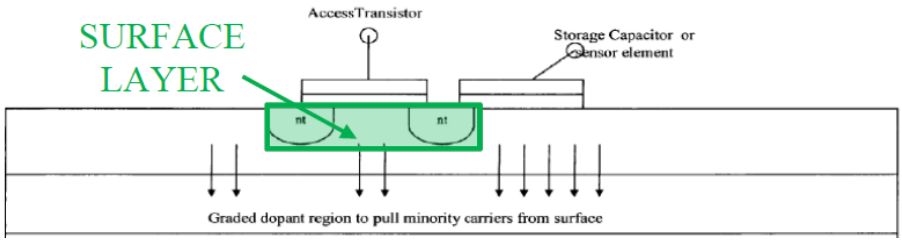

Dkt. 82-19, 20. Even more, Samsung explained that "the height/depth of the surface layer…should be sufficient enough to encompass the channel between the source and drain regions [] in addition the source and drain regions…" *Id*. It strains credibility that Defendants now argue that they cannot determine the "depth" of the surface layer. Dkt. 100, 9. The only thing that is "newly minted" here is Defendants' inconsistent positions. While Defendants might want to distance themselves from their counsel's previous positions, there is no disputing that their counsel agreed with Greenthread on behalf of Samsung that the "surface layer" terms do not need construction and should be given their plain meaning. Dkt. 96-5, 33.

All of Defendants' other arguments fail. ***First***, Defendants argue Greenthread has

eliminated "surface layer" as a separate claim element. Dkt. 100, 10. This is not true. The "surface layer" is a particular location in the silicon, and the "active region" is a region where a transistor can be formed (note the "access transistor"). These terms have different meanings, and the following figure shows how the "active region" is a portion of the "surface layer."

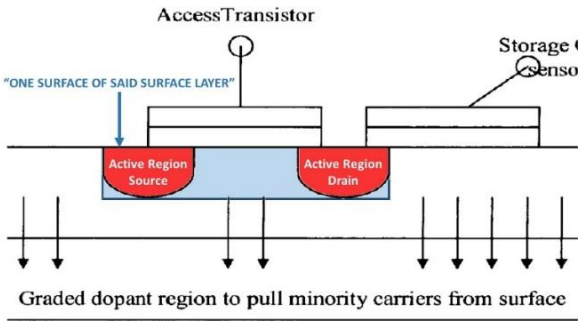

Dkt. 96, 21 (showing annotated Fig. 5B of 195 patent). ***Second***, Defendants repeat their failed argument that "disposed on" doesn't mean what is shown above. Dkt. 100, 10. But the source and drain are clearly disposed on the top surface of the surface layer, and this is how CMOS transistors are ordinarily formed. Dkt. 96-1, ¶¶18, 21-22, 25, 30, 53. ***Third***, Defendants baldly allege that Greenthread's construction is contrary to the specification. Dkt. 100, 11. But the specification says the access transistor can be a surface-channel MOSFET, and it is well known in the art that in such a device, the active region is located in the surface layer. Dkt. 96-1, ¶¶53, 56, 59; Dkt. 96-2, 3:41-43. ***Fourth***, Defendants make the nonsensical argument that the Examiner identified "an actual physical layer," but that doesn't change the fact that he identified a layer at the surface, which is exactly what Greenthread's construction says. Dkt. 100, 11. ***Fifth***, Defendants take aim at Wolf's illustration of the "surface layer," but just like Greenthread, Wolf uses "surface layer" to refer to "a layer at the surface." *Id.*, 11-12. So there is nothing inconsistent between Wolf and Greenthread's construction. Furthermore, Wolf never said the surface layer does not include the source and drain or that it stopped at their inside edge. Dkt. 96-1, ¶46; Dkt. 82-16, 6 (Wolf Vol. 2) (describing the "top surface of the body" as "consist[ing] of active or

transistor regions" and explaining "[t]he active regions are those in which transistor action occurs; i.e., the channel and the heavily doped source and drain regions"); Dkt. 82-17 (Wolf Vol. 3), 11 (showing the "surface layer" as "a layer at the surface" of the silicon); Dkt. 82-18 (Wolf Vol. 4), 7, 10 (describing "surface layer" as a doped silicon layer at the surface of the silicon).

2. "substrate" (195:1; 502:7; 842:1, 9; 481:1, 20; 222:1, 21, 39, 41, 42, 44; 014:1, 21)

Greenthread	Defendants
Plain and ordinary meaning, where the plain and ordinary meaning is "an underlying layer"	"the initial material within which or on which the semiconductor device is fabricated

Defendants maintain their indefensible position that the "substrate" must be the "initial material." Dkt. 100, 13-14. Ironically, Defendants criticize Greenthread for citing two "lay" dictionaries for the definition "underlying layer." *Id.* Meanwhile, Defendants cannot cite to ***any*** dictionary definition to support their construction. The closest Defendants could find is: "the physical material on which a microcircuit is fabricated." Dkt. 82-22, 5. The fact that Defendants had to alter this definition to insert "initial material" is proof that it is not the ordinary meaning.

There is nothing in the intrinsic record that mandates that the "substrate" has to be the "initial material." Scrambling to find something, Defendants misrepresent the prosecution history. Dkt. 100, 13. The actual quote reads: "a critical feature of the invention is that the dopant region of Figure 5b disposed just above the P-substrate forms a distinct drift layer disposed between an active region and a substrate layer." Dkt. 82-8, 175. This sentence merely refers to the importance of the graded dopants. It never says the "substrate" must be the initial material. In fact, the specification says the opposite. Dkt. 96-2, 3:1-3, 3:35-37 ("One or more of such layers can also be implanted through wafer to wafer bondings or similar 'transfer' mechanisms."); Dkt. 96, 26.

Defendants are also wrong about the specification's description of Fig. 5A as a "substrate

with two wells, and, an underlying layer." Dkt. 96-2, 2:27-28. Defendants argue this means that "not all 'underlying layers' are substrates." Dkt. 100, 13. But Defendants overlook that in Fig. 5A the "underlaying layer" (shaded gray) ***is*** referred to as a "substrate."

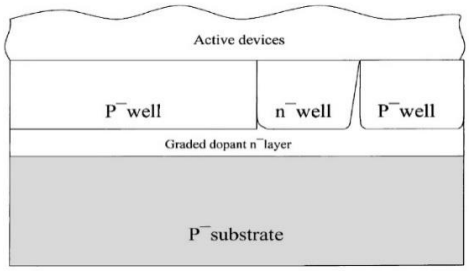

Ex. 96-2, Fig. 5A. Rather than supporting Defendants, this is compelling proof that Greenthread's construction is correct. As seen above, the specification uses "substrate" and "underlying layer" interchangeably, confirming that a "substrate" is an "underlying layer." Furthermore, Fig. 5A shows how "substrate" is a relative term. As seen above, the "P^- substrate" is a "substrate" for the wells because it is underneath the wells. But collectively, the wells and P- substrate are also a "substrate." In Dr. Rao's own words, they are a "substrate with two wells, and, an underlying layer." Dkt. 96-2, 2:27-28. And they are a "substrate" for the active devices shown in Fig. 5A because they are underneath the devices. In both cases, the "substrate" is an "underlying layer."

3. "active region" (195:1; 502:7; 842:1, 9; 481:1, 20; 222:1, 21, 39, 41, 42, 44; 014:1, 21)

Greenthread	Defendants
Plain and ordinary meaning	**Original:** "region that forms the current path of a device" **New:** "the source, drain, and channel region of a device"

"Active region" is a term that POSITAs readily understand and can easily explain to jurors. Dkt. 96-1, ¶¶71-75. A POSITA would understand that an active region is a doped silicon region at the surface of a semiconductor device where a transistor can be formed. *Id.* This is how the term is used in the relevant claims and throughout the intrinsic record. *Id.*, ¶71. There is no need

to construe the term, and to do so would only introduce ambiguity where there is none. *ActiveVideo Networks, Inc. v. Verizon Communications, Inc.*, 694 F.3d 1312, 1324-26 (Fed. Cir. 2012) (affirming that the rejection of an overly narrow and confusing construction in favor of plain and ordinary meaning properly "resolved the dispute between the parties.").

In its Responsive Brief, Greenthread showed why Defendants' original construction was wrong. Dkt. 96, 28-29. Now, Defendants regroup with a new construction. Dkt. 100, 7 (adding "the source, drain, and channel region of a device"). In doing so, Defendants pretend they are agreeing with Greenthread. *Id.*, 6. But don't be fooled. There is no agreement, and Defendants' have loaded up their construction with extraneous limitations.

In its Responsive Brief, Greenthread explained that in certain contexts, like exemplary claim 195:1, the "active region" may be the "source and drain and silicon between them." Dkt. 96, 29. But other claims, like exemplary claim 842:1, do not require a source or a drain. To construe "active region" as Defendants propose would insert source and drain limitations into claims where they don't exist. The Federal Circuit has instructed that when construing the same term in related patents, the same construction must be used for all of the patents. *NTP, Inc. v. Research in Motion, Ltd.*, 418 F.3d 1282, 1293 (Fed. Cir. 2005). Thus, Defendants' construction cannot possibly be the correct construction.

Furthermore, Defendants have changed the clear language "silicon between them" to a less clear term "channel region." Dkt. 100, 7. To make matters worse, Defendants tip their hand that they intend to use the term "channel region" as a hook for additional limitations. Defendants imply that this "channel region" must be a "thin layer below the surface." *Id.*, 15. While this may be true for a surface-channel MOSFET, it may not be true for other types of transistors, like a buried-channel MOSFET. Dkt. 82-17, 9-10. Dr. Rao did not disclaim other types of transistors, and there

is no reason to limit the claims in this manner. Defendants have not identified any disclaimer or disavowal (nor can they) that would justify limiting this claim term as Defendants propose.

4. "unidirectional electric drift field" terms (195:1; 502:7; 222:44)

Greenthread	Defendants
Plain and ordinary meaning	"said [drift layer further/well region…] having a [first/second] static electric drift field that is unidirectional over the [drift layer/well region]" "said [drift layer/well region] having a graded concentration of dopants generating a [first/second] static electric drift field that is unidirectional over the [drift layer/well region]"

For this term, Defendants maintain there was prosecution disclaimer where there was none. In its Opening Brief, Defendants misrepresented what Dr. Rao said about Kamins. Here, Defendants make much ado about the following figures contending that the middle layer 21 (shaded green) contains graded dopants that create two electric fields.

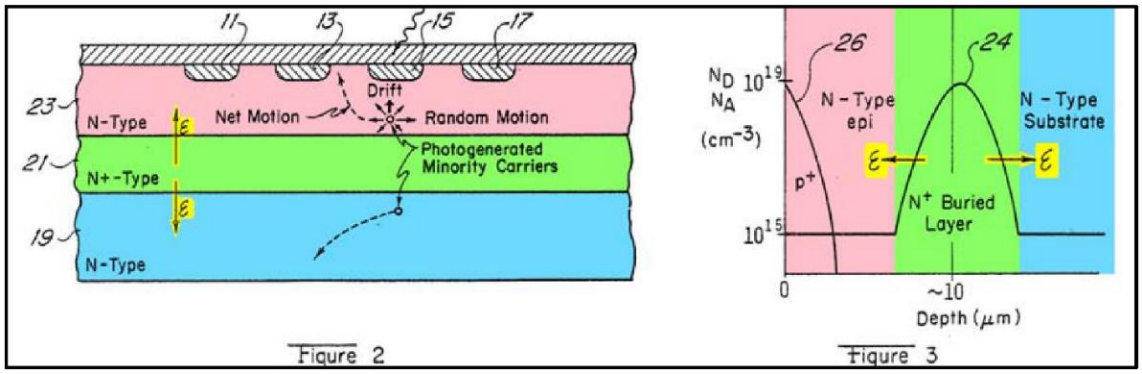

Dkt. 82, 23. Even if this is true, this does not change the end result that there was no prosecution disclaimer. This is because Dr. Rao distinguished Kamins on the basis that there was no "single drift layer" that aids the movement of "minority carriers ***from*** said surface layer ***to*** the substrate." During prosecution, the Examiner identified the "surface layer" as the top pink layer 23 and the "drift layer" as the middle green layer 21. Dkt. 82-8, 223 ("a surface layer (23)" and "a drift layer (21)"). As Dr. Rao pointed out, the middle green layer cannot be the claimed "single drift layer" because it does not move minority carriers ***from*** the surface layer ***to*** the substrate. *Id.*, 238. As he

explained, the middle green layer either accelerates minority carriers ***towards*** the surface, or merely moves them deeper into the substrate. *Id*. Thus, there is no layer in Kamins that moves minority carriers ***from the surface layer to the substrate***.

Figure 2 above refers to "photogenerated" carriers in the green layer 21. Dkt. 82-10, 2:11-20. These carriers include electrons and holes with the latter being the minority carriers in the Kamins device. *Id.* There are only two possible scenarios for "aid[ing] the movement" of the minority carriers. In the first scenario, the minority carrier will move from the green buried layer to the cross hatched surface of the pink layer (*see* dashed line labeled "Net Motion"). This is certainly *not* movement from the surface layer to the substrate. In the second scenario, the minority carriers will move from the green buried layer to the blue underlying layer. Again this is not movement from the pink surface layer to the substrate. Thus, Dr. Rao's claims were clearly patentable over Kamins for these reasons alone. There is no logical reason that Dr. Rao would have limited his claims to require the electric field to be unidirectional over the entire drift layer, or disclaimed multiple electric fields in any of the layers. It was not necessary to overcome the prior art. When, as here, there is another explanation for the amendment (*e.g.*, to clarify that the movement is from the surface layer to the substrate), Defendants cannot meet the high bar for prosecution disclaimer. *Baxalta Inc. v. Genentech, Inc.*, 972 F.3d 1341, 1348-49 (Fed. Cir. 2020) (finding the patentee's claim amendment did "not clearly establish disclaimer" where another "plausible" explanation for the introduction of the amendment was presented).

5. "to aid the movement" terms (195:1; 502:7; 842:1, 9; 481:1, 20; 222:1, 21, 39, 41, 42, 44; 014:1, 21)

Greenthread	Defendants
Plain and ordinary meaning	Indefinite. Alternative constructions: "to sweep the minority carriers from…to…" or "to sweep the carriers from…[to/towards]…"

Defendants spend nearly a quarter of their Reply Brief on this term, making long and convoluted arguments. But the reality is this is a simple term that needs little, if any, explanation. This is not a purely subjective term, like "aesthetically pleasing" or "unobstrusive." Or a term of degree, like "high pressure" or "extended duration of time." It is not like the claim says "to aid the movement a lot." Rather, it simply says "to aid the movement." Moreover, the claims, specification, and prosecution history provides numerous examples of what is meant by this term. When, as here, the specification provides specific examples of what is meant by the term, the Federal Circuit has consistently held before and after *Nautilus* that the term is not indefinite. *See, e.g.*, *Sonix Tech. Co. v. Publ'ns Int'l, Ltd.*, 844 F.3d 1370, 1376-79 (Fed. Cir. 2017) (holding that "the requirements and examples in the written description would have allowed a skilled artisan to know the scope of the claimed invention with reasonable certainty"); *CFL Techs. LLC v. Osram Sylvania, Inc.*, No. 18-1445-RGA, 2022 WL 606329, at *14 (D. Del. Jan. 21, 2022) (rejecting defendant's argument that "distinctly shorter" was indefinite, where the specification provided at least two examples allowing for objective boundaries that a POSITA could use to determine the scope of the term).

In *Sonix*, the Northern District of Illinois concluded that "visually negligible" was indefinite. 844 F.3d at 1375. The Federal Circuit disagreed. *Id*. at 1376. Notwithstanding the subjective nature of "visually negligible," and the "low level of detail" in the specification, the Federal Circuit determined that a skilled artisan could use the examples in the specification, and the manner in which the term was consistently used in the prosecution history to determine with reasonable certainty what is meant by the term. *Id*. at 1376-81. Here, the term "to aid the movement" is far clearer than "visually negligible." And like *Sonix*, Dr. Rao provided examples of what he meant by the term. More specifically, Dr. Rao explained that the graded dopants will

create an electric field that will move the minority carriers from the surface layer to the substrate, and Fig. 5B uses arrows to show the direction of the movement. Dkt. 96-2, 2:42-47; Fig. 5B. Furthermore, the term "to aid the movement of minority carriers from the surface layer to the substrate" was consistently used in the prosecution history to distinguish Kamins where minority carriers were accelerated towards the surface. Dkt. 82-8, 287, 291. When, as here, the intrinsic record provides examples of what is meant by the term, the term is not indefinite.

Defendants make numerous scattershot arguments in their Reply Brief, but all of their arguments fail. ***First***, Defendants argue the claim language "recites graded dopant(s) without guidance as to what particular graded dopant profile would fall within (or outside) the scope of the claims." Dkt. 100, 19. But there is no requirement for the claims to specify a particular graded dopant profile, and the specification provides numerous examples of such profiles. Dkt. .96-2, 2:40-42. As Greenthread previously noted, a POSITA would have understood that the electric drift field recited in the claims aids the movement of minority carriers, *e.g.*, because the drift field points to one direction and charge carriers, when free to move, respond to the drift field by moving in one direction or the other based on the polarity of the carriers. Dkt. 96, 35-36.

Second, Defendants argue that Greenthread's position "would read out the claim language entirely." Dkt. 100, 19. Greenthread is not reading out any claim language and Defendants have not explained how, exactly, any claim language is allegedly being read out. If there is not an electric drift field present, then clearly there cannot be an electric drift field to aid the movement of minority carriers in the manner recited in the claim, but that would not mean Greenthread is reading anything out. The claim language is straightforward (*e.g.*, claim 195:1 requiring a drift field to aid the movement of minority carriers from the surface layer to the substrate), and Defendants are needlessly complicating it.

Third, Defendants argue that a prior IPR supports their position. Dkt. 100, 20. Not true. Greenthread stated in the prior IPR of the 195 patent that Figure 11 of the Payne reference was inadequate for determining Payne's doping gradient or electric fields, or the resulting impact on minority carrier movement. Dkt. 82-20, 78. Defendants complain that Greenthread's statement is allegedly inconsistent with Greenthread's claim construction position, but that complaint is misplaced. That statement addresses an issue of evidentiary sufficiency that was certainly a relevant consideration for claim 195:1 in the IPR, since that claim recites an "electric drift field to aid the movement of minority carriers." The phrase "to aid the movement of minority carriers" clarifies the role of the electric drift field, but it is still a limitation of the claim.

Fourth, Defendants incorrectly argue that the Howe textbooks supports their position. Dkt. 100, 20-21. Defendants argue that Howe mentions carriers in "agitated, random motion" and shows three random trajectories of carriers. *Id.* But Defendants' Reply Brief merely refers to "random motion" and "random path changes" (*id.*, 20) of compensated carriers in thermal equilibrium, conveniently ignoring the fact that the claim language specifically recites "movement of minority carriers from said surface layer to said substrate." As Greenthread explained in its Responsive Brief, the claim language refers to uncompensated minority carriers, expelled from the active region in the surface layer, which carriers must move downward. Dkt. 96, 35. And Dr. Giapis has explained that uncompensated charge carriers, when free to move, respond to an electric drift field by moving in one direction or the other depending on their charge polarity. Dkt. 96-1, ¶88. Defendants' argument is merely an attempt to draw attention away from the straightforward claim language, and the Court should reject that argument.

Fifth, Defendants argue that *Enzo* fails to support Greenthread's position, but Defendants are incorrect. Dkt. 100, 21. As Greenthread explained in its Responsive Brief, "[t]he face of the

claim and the preferred embodiment in Fig. 5B explain exactly what is meant by 'to aid the movement of the minority carriers from the surface layer to the substrate.'" Dkt. 96, 35. In their Reply Brief, Defendants mention "the two short paragraphs of the specification" but appear to ignore the figure itself—the figure that Greenthread has described in great detail in its Responsive Brief (Dkt. 96) and above in this Sur-Reply Brief. Dkt. 100, 21.

Sixth, Defendants incorrectly argue that Greenthread "severs any linkage between the 'to aid movement' claim terms and the embodiment [of] Figure 5B of the specification by rejecting Defendants' alternative proposed construction.…" *Id.* As Greenthread noted in its Responsive Brief, there is no reason to replace the three simple words "to aid movement" with the new words "to sweep," particularly since Defendants intend to use "sweep" to import a narrower meaning than plain meaning. Dkt. 96, 39. Greenthread's recognition of the defects in Defendants' alternative construction does not in any way "sever[] any linkage" to the Figure 5B embodiment.

Seventh, Defendants incorrectly comment on the prior Samsung litigation. Dkt. 100, 22. Regardless of whatever Samsung argued or did not argue in its invalidity contentions—contentions that only limited what Samsung could ultimately argue later in the case—at the stage of the case where Samsung had the chance to actually argue indefiniteness of the "aid the movement" terms, Samsung (through the same law firm representing Defendants here) did not do so.

Eighth, Defendants incorrectly assert that "Dr. Smith's declaration confirms that the 'aid' terms are indefinite." *Id*. Dr. Smith's declaration from the 195 patent IPR does not state that the "aid" terms are indefinite or that a POSITA would not have been able to understand the scope of the claims. Defendants cited four paragraphs (93-96) of his declaration, but those paragraphs do not state that he could not understand the claim language, and Samsung did not cite those paragraphs as a basis for asserting indefiniteness of the 195 patent. Dkt. 96-6, ¶¶93-96.

6. "well region" (195:1; 502:7; 842:1, 9; 481:1, 20; 222:1, 21, 39, 41, 42, 44; 014:1, 21)

Greenthread	Defendants
Plain and ordinary meaning, where portions of a well are not well regions.	"A well, whether formed by single or multiple implants. Portions of a well are not well regions."

The parties agree that portions of a well are not well regions. But Defendants maintain that the Court should tack on unnecessary language that goes well beyond the plain meaning of this term and introduces unnecessary ambiguity that may confuse the jury. Dkt. 100, 22-23. Even a cursory review of technical textbooks confirms that "well regions" are frequently discussed without any discussion of the number of implants. Dkt. 96-13, 8-11. Therefore, this additional information goes beyond the plain meaning. Defendants do not claim prosecution disclaimer (nor can they). Instead, they argue that Greenthread's expert in a prior IPR commented about using more than one implant to form a well. Dkt. 100, 23. It should go without saying that not every comment about a claim term belongs in the construction of that term. When, as here, the additional language would only serve to confuse the jury, it should be omitted. *Multiform Dessicants, Inc. v. Medzam Ltd.*, 133 F.3d 1473, 1477 (Fed. Cir. 1998); *GCP Applied Techs., Inc. v. AVM Indus., Inc.*, No. CV-19-7475-MWF, 2021 U.S. Dist. LEXIS 146446, at *18-19 (C.D. Cal. Aug. 4, 2021).

B. Claim Term Found in Exemplary Claim 842:1

7. "active region…within which transistors can be formed" (842:1, 9; 481:1, 20; 222:1, 21, 39, 41, 42; 014:1, 21)

Greenthread	Defendants
Plain and ordinary meaning	Indefinite

As explained in Section III.A.3 *supra*, a POSITA reading the claims and intrinsic record would understand this term means exactly what it says: an active region (*i.e.*, a doped region at the surface of a semiconductor device) where a transistor can be formed. Dkt. 96-1, ¶94. Claim 195:1

specifies, for example, that an active region includes a source and drain (two doped regions at the surface of a semiconductor device where a transistor can be formed).

Defendants maintain their argument that "active region" requires an electrical current. Dkt. 100, 24. Greenthread has already shown numerous times why this is not true. Dkt. 96, 29, 41; Dkt. 96-1, ¶96; Dkt. 96-9, 28; 96-4, 6. While an active region can be electrically active, it doesn't have to be. The fact that POSITAs use "electrically active region" to distinguish from mere "active regions" indicates that not all "active regions" have to be electrified. Dkt. 96-1, ¶100.

When "active region" is properly viewed from this perspective, all of Defendants' other indefiniteness arguments quickly unravel. ***First***, Defendants argue that "Dr. Rao argued during prosecution that a device is 'active when a voltage (or current) is applied' causing current to flow." Dkt. 100, 24. But Defendants neglected to mention that the applicant was merely describing that active elements of a device "***can*** be active" when a voltage/current is applied and was not stating that a current ***must*** be applied for a region to be an active region. *Id.* ***Second***, Defendants argue that Greenthread's construction are contradicted by its infringement contentions. Dkt. 100, 24-25. This is not true. It is not surprising that Greenthread identified electrically active transistors in its infringement contentions. But this certainly does not mean that only an electrically active transistor has an active region. ***Third***, Defendants argue again that the Examiner was unable to ascertain the scope of the claims. *Id.*, 25. But as Greenthread explained in its Responsive Brief, Dr. Rao did not agree with the Examiner's construction for the "first active region" and did not dispute that a source/drain region could be an active region. Dkt. 96-11, 130-131; Dkt. 96, 43-44.

III. CONCLUSION

For the reasons above, terms 1, 5, and 7 are not indefinite, and all of the terms should be given their plain and ordinary meaning.

Dated: November 28, 2022

McKool Smith, P.C.

/s/ *Alan L. Whitehurst*

Alan L. Whitehurst
D.C. Bar No. 484873
awhitehurst@mcKoolsmith.com
Nicholas T. Matich
D.C. Bar No. 1024907
nmatich@mckoolsmith.com
Arvind Jairam
D.C. Bar No. 1017133
ajairam@mckoolsmith.com
McKool Smith, P.C.
1999 K Street, NW, Suite 600
Washington, DC 20006
Tel: (202) 370-8300
Fax: (202) 370-8344

John B. Campbell
Texas State Bar No. 24036314
jcampbell@mckoolsmith.com
McKool Smith, P.C.
303 Colorado Street, Suite 2100
Austin, TX 78701
Tel: (512) 692-8700
Fax: (512) 692-8744

Kaitlyn M. Dawson
Texas Bar No. 21401683
McKool Smith, P.C.
600 Travis Street, Suite 7000
Houston, TX 77002
Tel: (713) 485-7300
Fax: (713) 485-7344

Attorneys for Plaintiff Greenthread, LLC

CERTIFICATE OF SERVICE

I hereby certify that a true and correct copy of the above and foregoing document has been served on all counsel of record via the Court's ECF system on November 28, 2022.

/s/ *Alan L. Whitehurst*
Alan L. Whitehurst

EXHIBIT 15

US007071129B2

(12) **United States Patent**
Jan et al.

(10) **Patent No.: US 7,071,129 B2**
(45) **Date of Patent: Jul. 4, 2006**

(54) **ENHANCING ADHESION OF SILICON NITRIDE FILMS TO CARBON-CONTAINING OXIDE FILMS**

(75) Inventors: **Chia-Hong Jan**, Portland, OR (US); **Tracey Scherban**, Portland, OR (US); **Ying Zhou**, Portland, OR (US); **Adam Schafer**, Portland, OR (US); **Brett Robert Schroeder**, Portland, OR (US)

(73) Assignee: **Intel Corporation**, Santa Clara, CA (US)

(*) Notice: Subject to any disclaimer, the term of this patent is extended or adjusted under 35 U.S.C. 154(b) by 295 days.

(21) Appl. No.: **10/242,086**

(22) Filed: **Sep. 12, 2002**

(65) **Prior Publication Data**

US 2004/0051176 A1 Mar. 18, 2004

(51) **Int. Cl.**

H01L 21/26	(2006.01)
H01L 21/324	(2006.01)
H01L 21/31	(2006.01)
H01L 23/48	(2006.01)

(52) **U.S. Cl.** **438/798**; 438/778; 438/788; 438/964; 257/760

(58) **Field of Classification Search** 438/699, 438/724, 771, 787, 788, 789, 790, 791, 624, 438/778, 783, 798, 964, 710, 711; 257/758, 257/760

See application file for complete search history.

(56) **References Cited**

U.S. PATENT DOCUMENTS

5,633,208	A *	5/1997	Ishikawa	438/699
6,329,297	B1 *	12/2001	Balish et al.	438/714
6,407,013	B1 *	6/2002	Li et al.	438/788
6,602,806	B1 *	8/2003	Xia et al.	438/786
6,767,836	B1 *	7/2004	San et al.	438/710
2004/0084412	A1 *	5/2004	Waldfried et al.	216/67
2005/0032392	A1 *	2/2005	Goh et al.	438/763

OTHER PUBLICATIONS

Jeff Snodgrass, Christopher Litteken, Dan Maidenberg, Jim Rim, Seung-Yeop Kook, Michael Lane, Anna Vainchtein, and Reinhold H. Dauskardt, "Adhesion and Mechanical Reliability of Low-k Interconnect Structures," Proc. 4th Annual Topical Conf. on Relibility (SRC), Stanford, CA. (2000) pp. 1-23.*

(Continued)

Primary Examiner—Nitin Parekh
(74) *Attorney, Agent, or Firm*—Trop, Pruner & Hu, P.C.

(57) **ABSTRACT**

Adhesion between silicon nitride etch-stop layers and carbon doped oxide films may be improved by using plasma argon densification treatments of the carbon doped oxide films. The resulting surface layer of the carbon doped oxide films may be carbon-depleted and may include a relatively rough interface to improve the adhesion of deposited silicon nitride films.

9 Claims, 1 Drawing Sheet

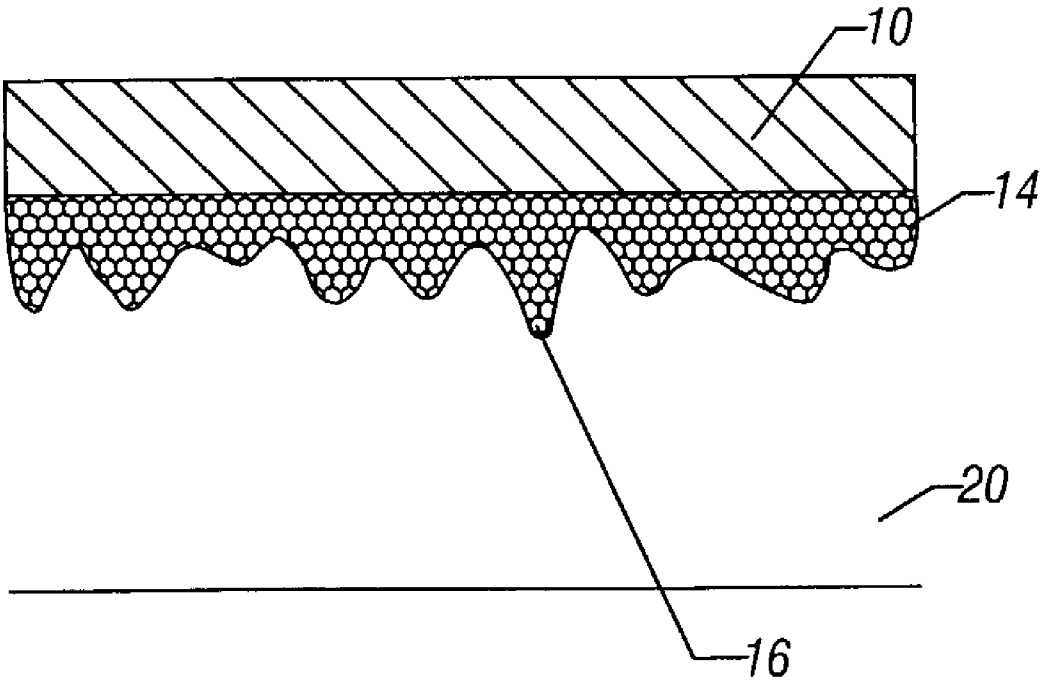

OTHER PUBLICATIONS

Kuo-Lung Fang, Bing-Yue Tsui, Chen-Chi Yang, Mao-Chieh Chen, Shyh-Dar Lee, Knut Beekmann, Tony Wilby, Kath Giles, and Sajid Ishaq, Electrical and Material Stability of ORION™ CVD Ultra Low-k Dielectric Film for Copper Interconnection, Technical Report, National Chiao-Tung University, Taiwan (2001) pp. 1-3.*

H. Donohue, K. Buchanan, R.E. Dunin-Borkowski, and S.B. Newcomb, "The Effects of Resist Strip Processing on a Porous Low k Dielectric Oxide," Proc. Microscopy of Semiconductor Materials, Mar. 31, 2003, pp. 1-4.*

S.KI. Almera, P.D. Matz, J. Kim, P.B. Smith, S. Grunow, S.S. Papa, C. Jin, and T.Q. Hurd, "Plasma Damage and Pore Sealing: Increasingly Coupled ULK Integration Challenges," Future Fab Internationalm vol. 17, Jun. 21, 2004, pp. 1-8.*

S. Wolf and R.N. Tauber, "Silicon Processing for the VLSI Era, vol. 1: Process Technology," Lattice Press, Sunset Beach, CA. (1986), p. 324.*

* cited by examiner

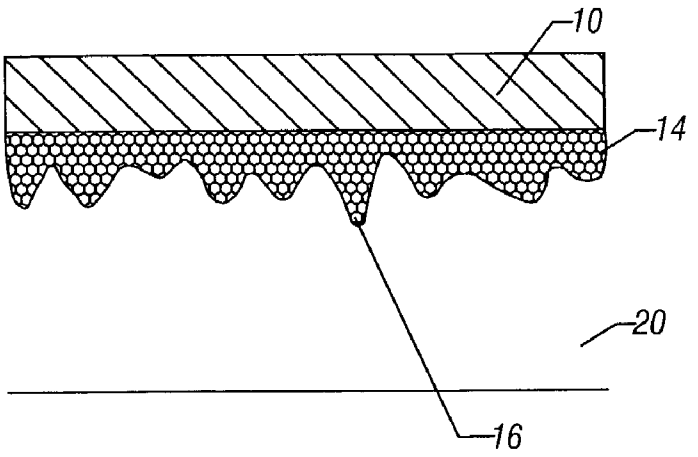

FIG. 1

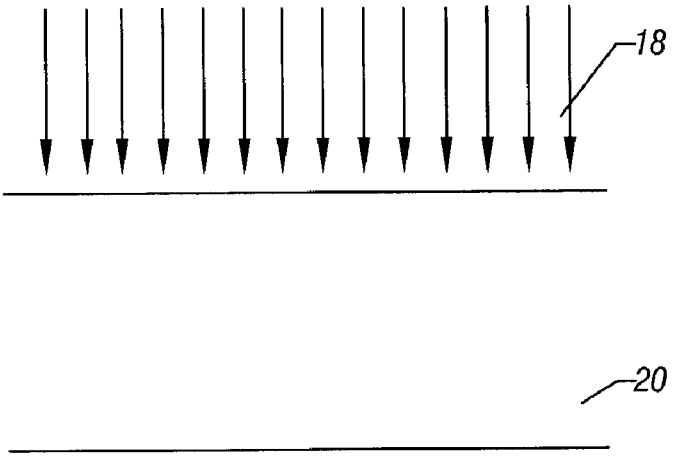

FIG. 2

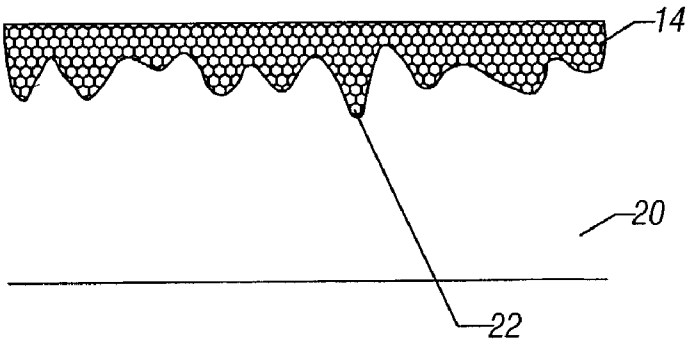

FIG. 3

ENHANCING ADHESION OF SILICON NITRIDE FILMS TO CARBON-CONTAINING OXIDE FILMS

BACKGROUND

This invention relates generally to adhering silicon nitride films to carbon-containing silicon oxide films.

In interconnect systems, it is desirable to integrate low dielectric constant interlayer dielectric carbon doped oxide films. Carbon doping of the oxide improves the overall performance of the interconnect system by lowering its dielectric constant. However, the carbon doping also degrades the interface adhesion between the carbon doped oxide interlayer dielectric films and silicon nitride etch-stop films. As a result of the poor adhesion, thermomechanical failures may occur due to packaging induced stress. These failures may occur at the top and bottom of the carbon doped oxide films.

Current techniques for solving this problem involve using a downstream plasma ammonia pretreatment of the carbon doped oxide film surface before the silicon nitride film deposition. However, this treatment merely removes surface contaminants and does not reduce or solve the adhesion problem.

Thus, there is a need for better ways to adhere silicon nitride films to carbon-doped oxide films.

BRIEF DESCRIPTION OF THE DRAWINGS

FIG. **1** is an enlarged cross-sectional view of one embodiment of the present invention;

FIG. **2** is an enlarged cross-sectional view of the embodiment shown in FIG. **1** in the course of fabrication in accordance with one embodiment of the present invention; and

FIG. **3** is an enlarged cross-sectional view of the embodiment shown in FIG. **2** in the course of further fabrication in accordance with one embodiment of the present invention.

DETAILED DESCRIPTION

A directional plasma argon densification treatment of carbon doped oxide films prior to silicon nitride deposition improves the adhesion between the silicon nitride etch-stop film layer and a carbon doped oxide film layer. The densified surface layer creates a buried interface to the bulk carbon doped oxide film. Adhesion between the silicon nitride and the carbon doped oxide film may be improved by more than 50 percent in some embodiments.

The use of the argon densification process modifies the carbon doped oxide film chemically by producing a carbon-depleted or silicon dioxide-like surface layer. It also modifies the carbon doped oxide film physically by densifying the surface layer. In particular, it creates a rough, buried interface between the dense, carbon-depleted surface layer and the bulk carbon doped oxide film. At the same time, the actual carbon doped oxide surface is not roughened.

Thus, referring to FIG. **1**, the carbon doped oxide film **20** may have a roughened, carbon-depleted surface layer **14** which includes protrusions **16**. The silicon nitride etch-stop layer **10** may be formed, for example by deposition, on top of the densified, carbon-depleted surface layer **14**.

Referring to FIG. **2**, the substrate may be prepared using the conventional interconnect dual damascene processing where parts of the exposed surface are carbon doped oxide films **20**. The top surfaces of the carbon doped oxide films

20 are carbon-rich and relatively porous as a bulk film and the adhesion to the silicon nitride is poor compared to undoped oxide films.

The entire surface of the carbon doped oxide film **20** may be treated with a directional argon plasma. The power and dose of the argon plasma may be high enough to create a densified, carbon-depleted layer with a buried, rough interface to the bulk films.

Thus, as shown in FIG. **3**, the densified, carbon-depleted surface layer **14** may be created in the carbon doped oxide film **20** resulting in an interface with protrusions **16**. Finally, the silicon nitride etch stop layer **10** is formed on the carbon-depleted surface layer **20** as an etch-stop layer for the downstream process steps. The densified, carbon-depleted layer **14** with its roughened interface can enhance the silicon nitride adhesion to the carbon doped oxide films.

For example, in some embodiments through the use of argon sputtering, the ratio of $SiCH_3$ to SiOH may be lowered from 0.42 to 0.02 (measured using time-of-flight secondary ion mass spectrometry (TOFSIMS)) on the top five atomic layers), the near surface density may be increased from 1.6 g/cc to 3.9 g/cc (measured with X-ray reflectivity at 20–100 Angstroms) and the roughness of the carbon doped oxide film can be reduced from 0.19 to 0.14 nanometers, measured with atomic force microscopy (AFM). In the same example, the interface adhesion energy may be improved from 3.2 J/m^2 using ammonia plasma pretreatment or 4.2 j/m^2 using H_2 plasma to 5.1 J/m^2 with argon sputtering two times. The fracture interface root mean squared (rms) roughness in nanometers may be improved from 0.23 for ammonia pretreatment or 0.31 for H_2 plasma surface treatment to 0.44 with argon sputtering two times. The adhesion energy may be measured with a 4-point bending on the silicon nitride/carbon doped oxide blanket film stacks. The fracture interface roughness may be measured with an atomic force microscopy of delaminated 4-point bend samples.

While the present invention has been described with respect to a limited number of embodiments, those skilled in the art will appreciate numerous modifications and variations therefrom. It is intended that the appended claims cover all such modifications and variations as fall within the true spirit and scope of this present invention.

What is claimed is:

1. A method comprising:

forming a carbon depleted surface layer with protrusions that extend into carbon doped oxide film.

2. The method of claim **1** comprising:

depleting carbon in the carbon doped oxide film using an argon plasma; and

forming a silicon nitride layer over said depleted carbon doped oxide film.

3. The method of claim **1** including forming a densified surface layer.

4. An integrated circuit comprising:

a substrate;

a carbon doped oxide film over said substrate, said film having a carbon depleted, densified upper surface, wherein said carbon doped oxide film has protrusions that extend downwardly into said film from said densified upper surface; and

a silicon nitride layer adhered to said carbon doped oxide film on said surface.

5. A method comprising:

densifying a carbon doped oxide film and forming a carbon depleted surface layer on said carbon doped oxide film;

forming a silicon nitride layer over said densified carbon doped oxide film; and

forming protrusions that extend into said carbon doped oxide film from said carbon depleted surface layer.

6. The method of claim **5** including exposing said carbon doped film to an argon plasma.

7. A method comprising:

forming a carbon depleted surface layer on a carbon doped oxide film;

forming a silicon nitride layer over said surface layer of said carbon doped oxide film; and

forming protrusions that extend into said carbon doped oxide film from said surface layer.

8. The method of claim **7** wherein said surface of said carbon doped oxide film is densified.

9. The method of claim **7** including exposing the surface of said carbon doped film to an argon plasma.

* * * * *

EXHIBIT 16

US011275201B2

(12) **United States Patent**
Aurongzeb

(10) **Patent No.: US 11,275,201 B2**
(45) **Date of Patent: Mar. 15, 2022**

(54) **DISPLAY DEVICE INCLUDING POROUS LAYERS**

(71) Applicant: **Dell Products L.P.**, Round Rock, TX (US)

(72) Inventor: **Deeder M. Aurongzeb**, Austin, TX (US)

(73) Assignee: **Dell Products L.P.**, Round Rock, TX (US)

(*) Notice: Subject to any disclaimer, the term of this patent is extended or adjusted under 35 U.S.C. 154(b) by 96 days.

(21) Appl. No.: **16/893,755**

(22) Filed: **Jun. 5, 2020**

(65) **Prior Publication Data**

US 2021/0382204 A1 Dec. 9, 2021

(51) **Int. Cl.**

G02B 1/118	(2015.01)
G02F 1/1368	(2006.01)
H01L 51/52	(2006.01)
G02F 1/1335	(2006.01)
G02B 1/11	(2015.01)

(52) **U.S. Cl.**
CPC ***G02B 1/118*** (2013.01); ***G02B 1/11*** (2013.01); ***G02F 1/1368*** (2013.01); ***G02F 1/133502*** (2013.01); ***G02F 1/133528*** (2013.01); ***H01L 51/5281*** (2013.01)

(58) **Field of Classification Search**
CPC G02F 1/133502; G02F 2201/38; G02F 2201/04; G02F 1/133504; H01L 51/5281; G02B 1/11; G02B 5/021; G02B 5/0221; B60J 3/06
See application file for complete search history.

(56) **References Cited**

U.S. PATENT DOCUMENTS

2006/0049745	A1*	3/2006	Handa	H01L 51/5268 313/503
2008/0316602	A1*	12/2008	Kameshima	G02B 1/11 359/599
2011/0181810	A1*	7/2011	Miyamoto	G02F 1/133606 349/64
2013/0215513	A1*	8/2013	Liang	C23C 18/122 359/601
2014/0049822	A1*	2/2014	Gollier	G02B 5/021 359/488.01
2018/0348577	A1*	12/2018	Pousthomis	H01L 33/50
2020/0333593	A1*	10/2020	Bard	B32B 17/10036
2021/0149245	A1*	5/2021	Li	G02F 1/133528

* cited by examiner

Primary Examiner — Michael H Caley
Assistant Examiner — Jonathan Y Jung
(74) *Attorney, Agent, or Firm* — Baker Botts L.L.P.

(57) **ABSTRACT**

A display structure for an information handling system, including a top surface layer; a first nanoporous layer; a first polarizer layer; a thin-film-transistor (TFT) layer; a second polarizer layer; and a back light layer, wherein the first nanoporous layer is positioned between the top surface layer and the first polarizer layer, and wherein the first nanoporous layer has an index of refraction less than the index of refraction of the top surface layer to reduce specular reflection of the display structure.

18 Claims, 9 Drawing Sheets

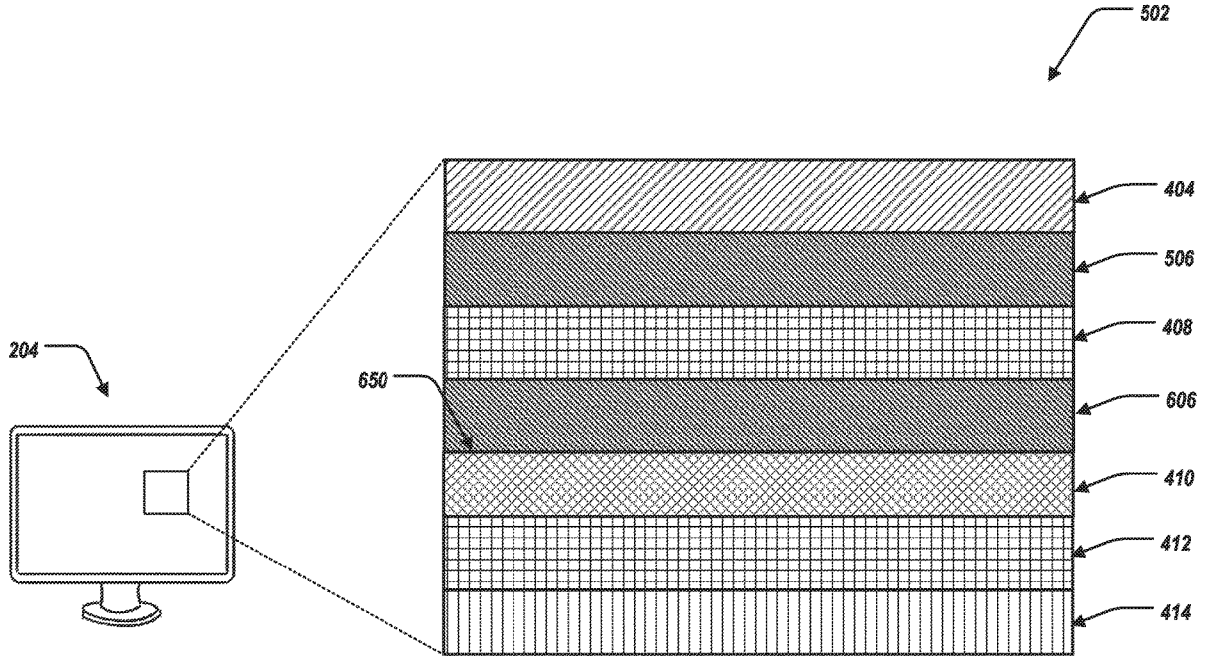

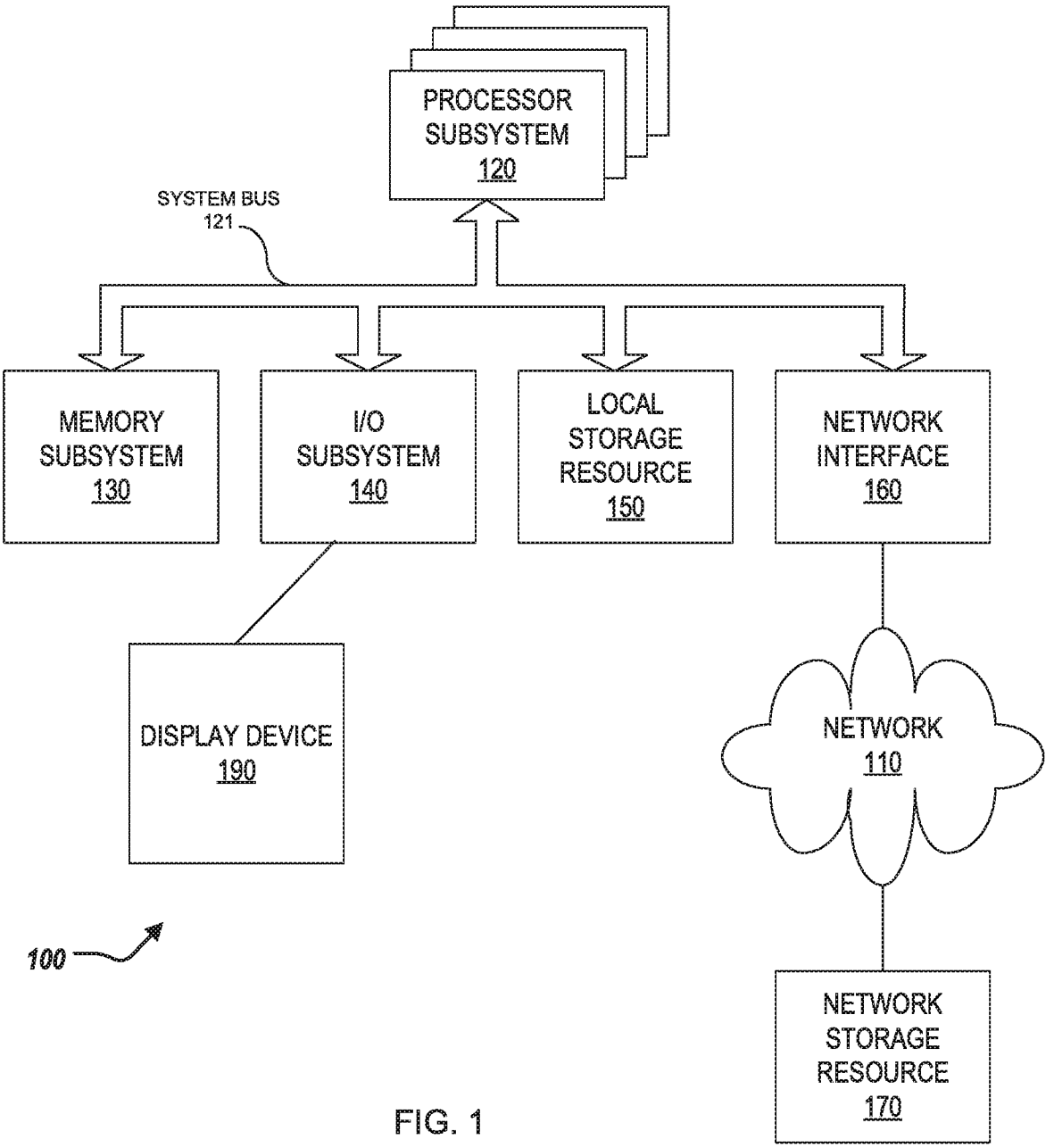
PROCESSOR SUBSYSTEM 120
SYSTEM BUS 121
MEMORY SUBSYSTEM 130
I/O SUBSYSTEM 140
LOCAL STORAGE RESOURCE 150
NETWORK INTERFACE 160
DISPLAY DEVICE 190
NETWORK 110
NETWORK STORAGE RESOURCE 170
100

FIG. 1

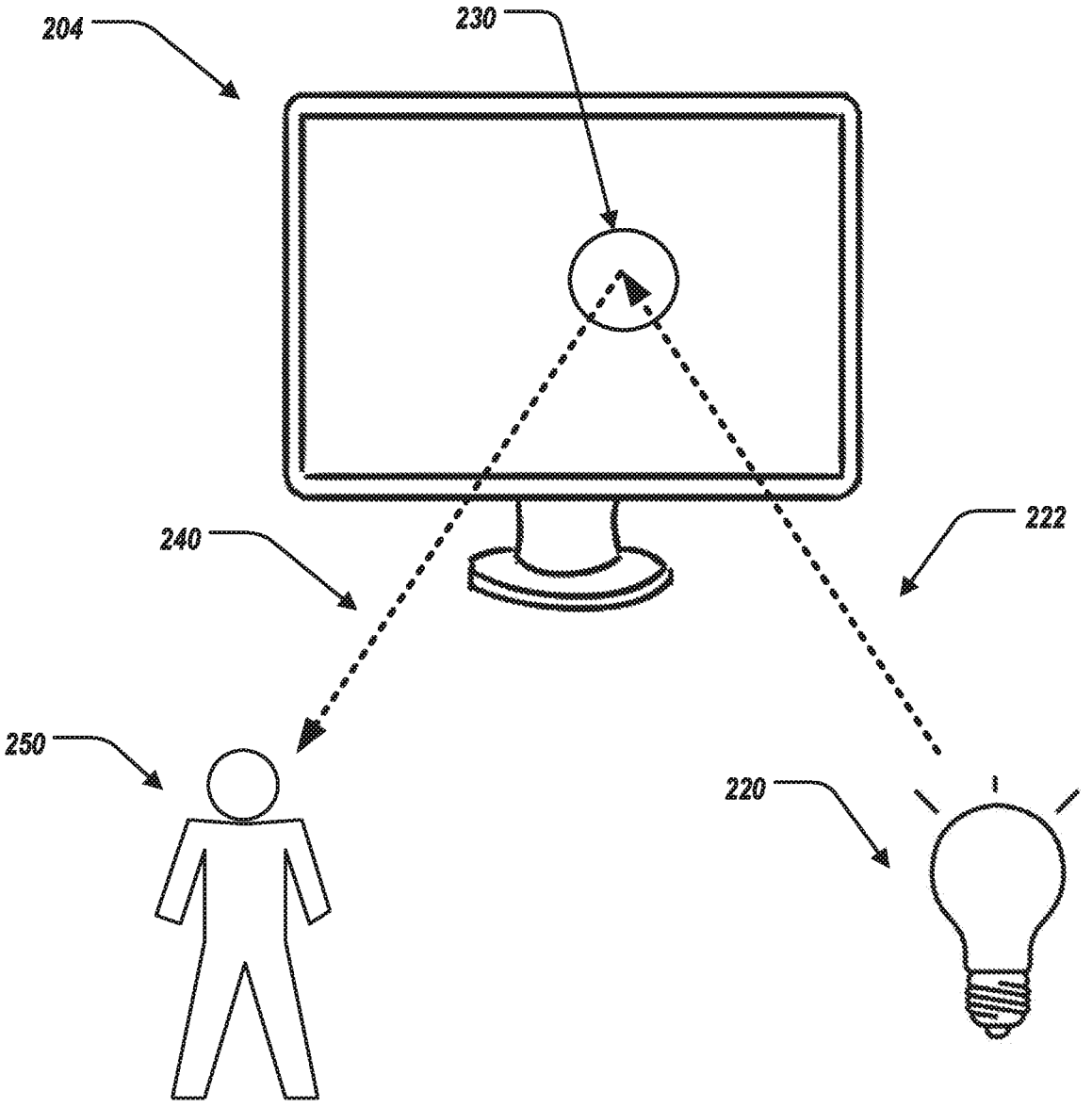

FIG. 2

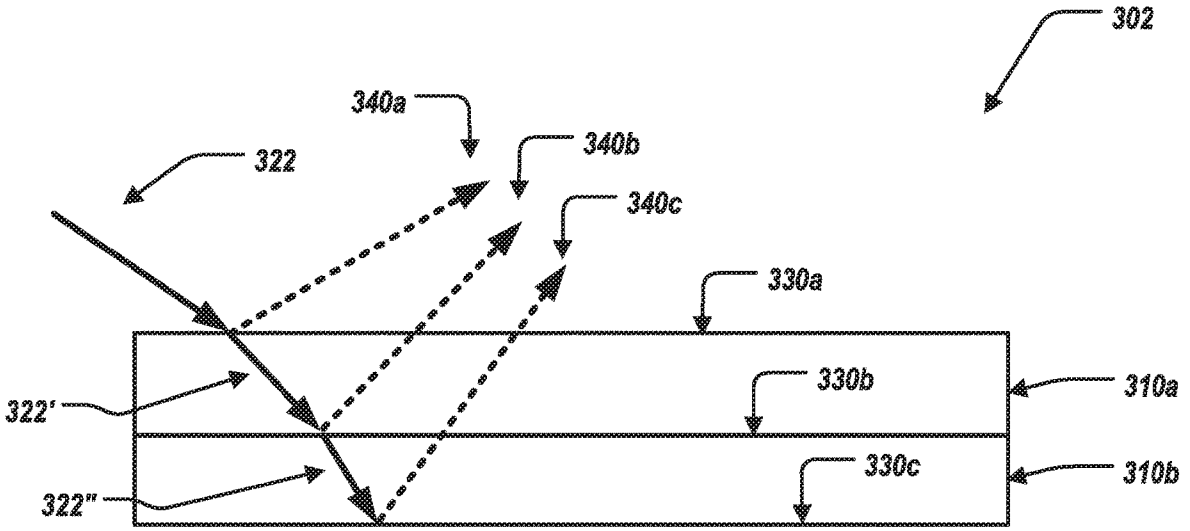

FIG. 3

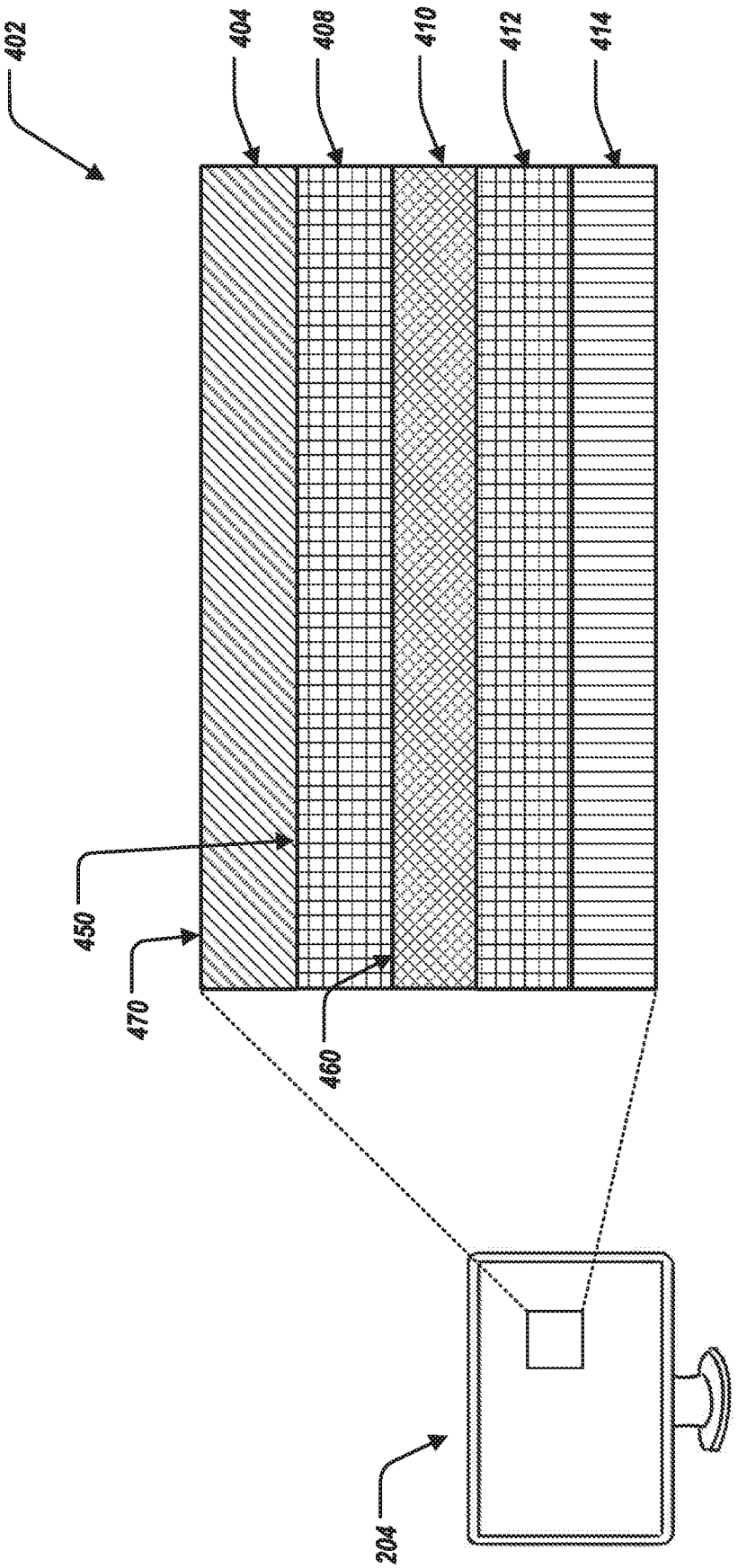

FIG. 4

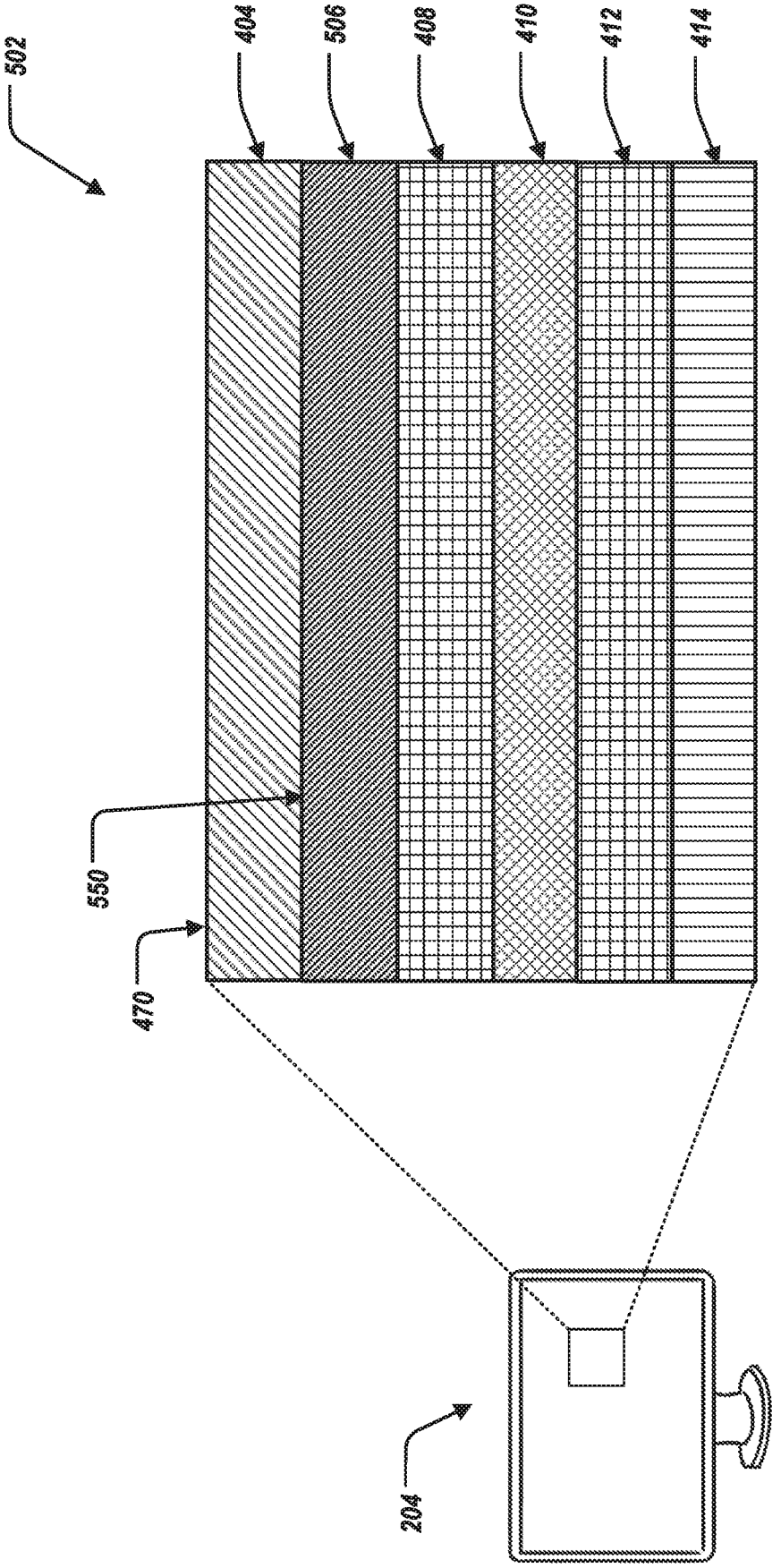

FIG. 5

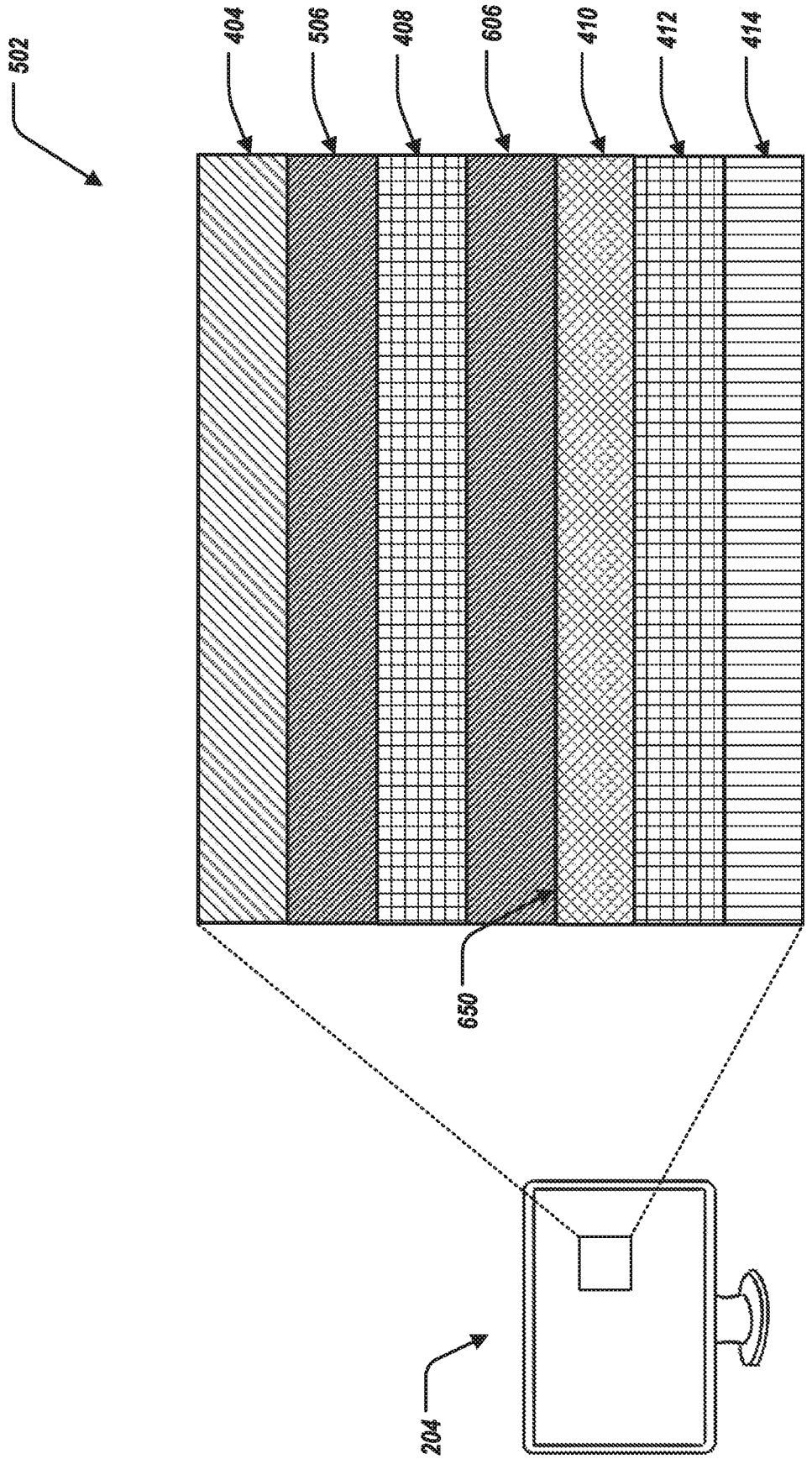

FIG. 6

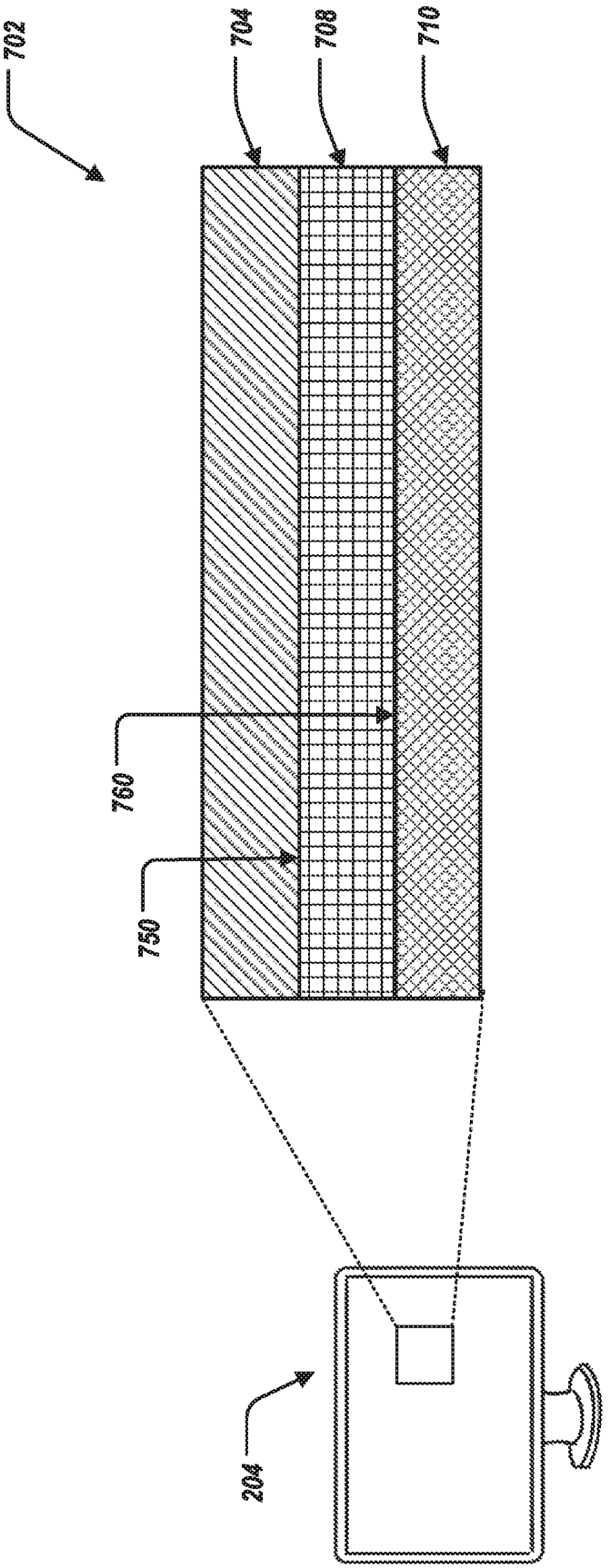

FIG. 7

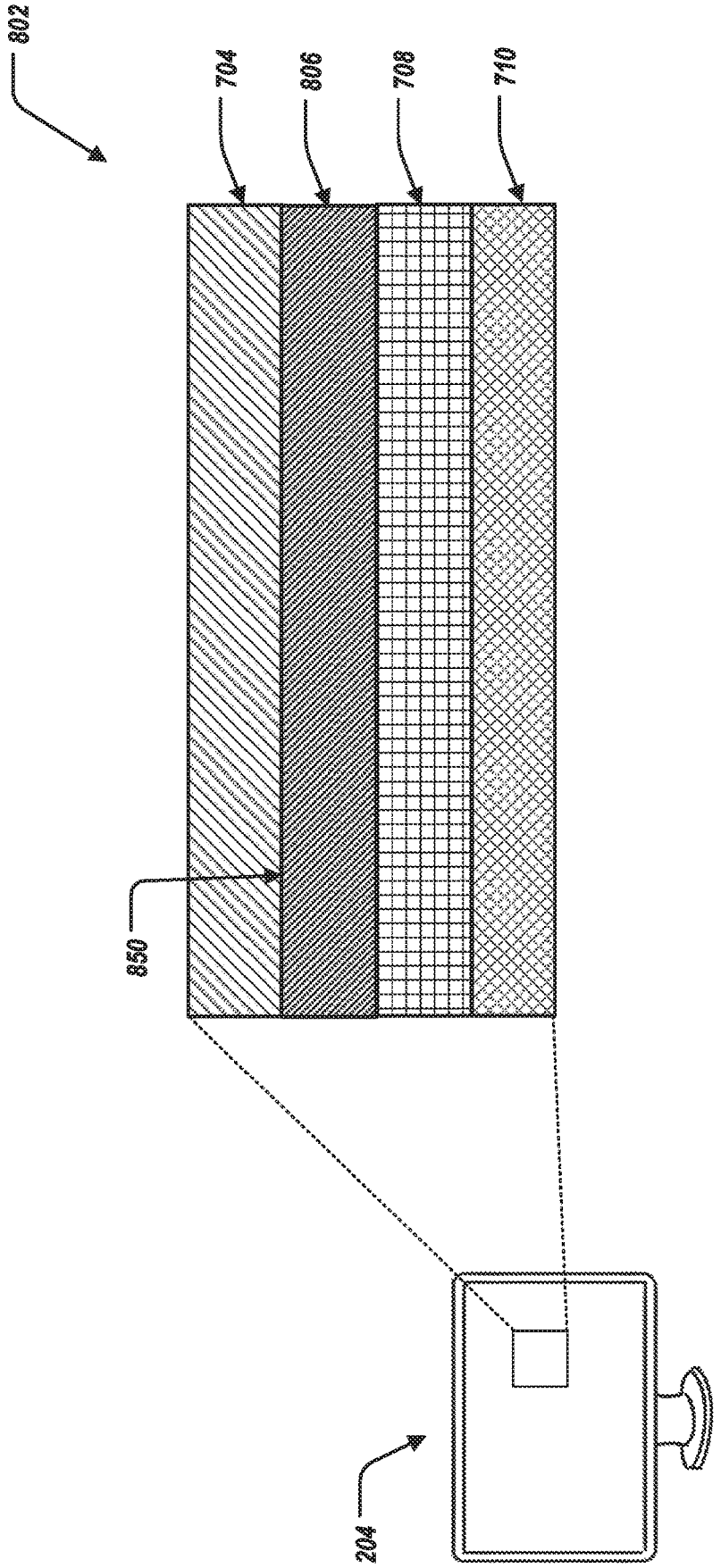

FIG. 8

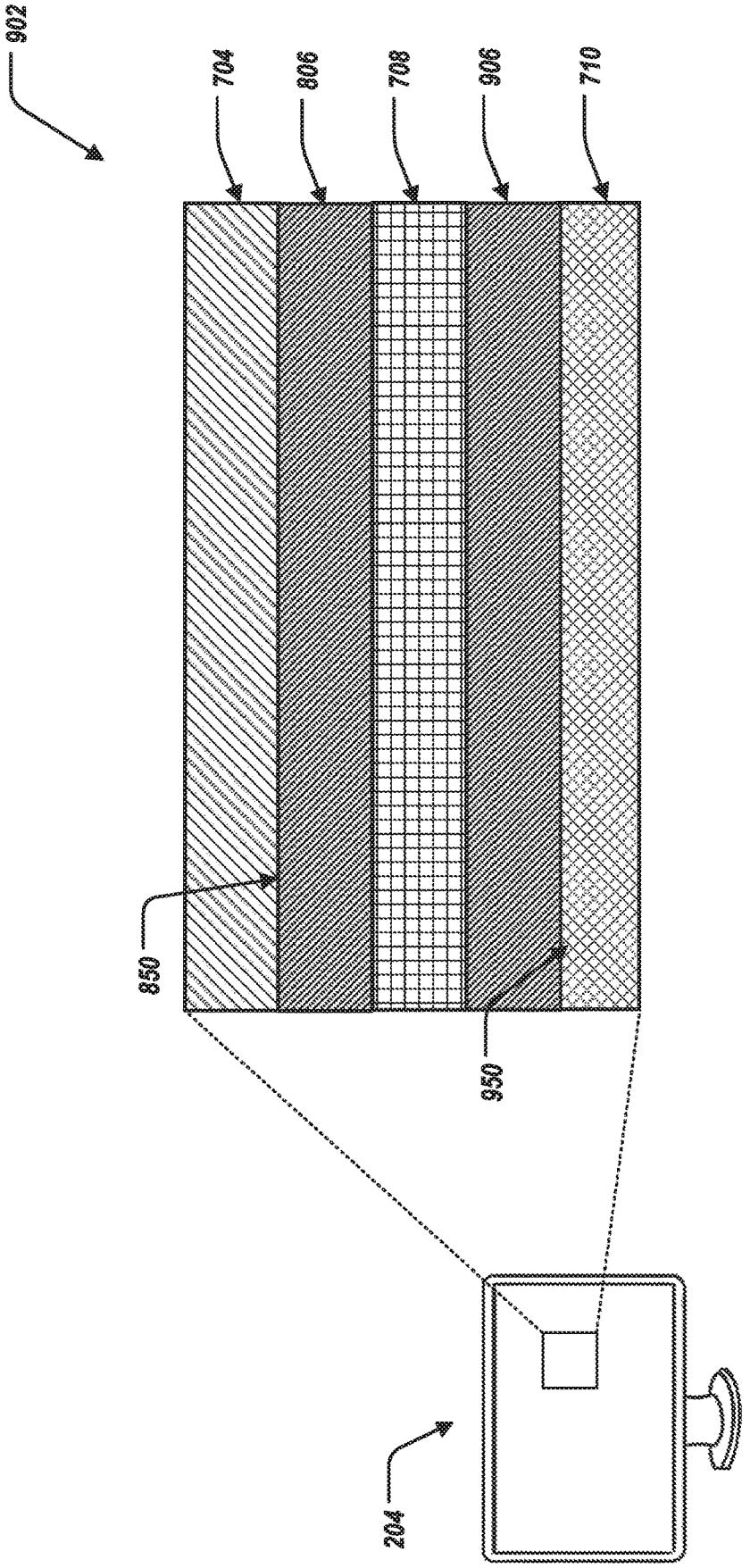

FIG. 9

DISPLAY DEVICE INCLUDING POROUS LAYERS

BACKGROUND

Field of the Disclosure

The disclosure relates generally to information handling systems, and specifically, a display device of the information handling system that includes porous layers.

Description of the Related Art

As the value and use of information continues to increase, individuals and businesses seek additional ways to process and store information. One option available to users is information handling systems. An information handling system generally processes, compiles, stores, and/or communicates information or data for business, personal, or other purposes thereby allowing users to take advantage of the value of the information. Because technology and information handling needs and requirements vary between different users or applications, information handling systems may also vary regarding what information is handled, how the information is handled, how much information is processed, stored, or communicated, and how quickly and efficiently the information may be processed, stored, or communicated. The variations in information handling systems allow for information handling systems to be general or configured for a specific user or specific use such as financial transaction processing, airline reservations, enterprise data storage, or global communications. In addition, information handling systems may include a variety of hardware and software components that may be configured to process, store, and communicate information and may include one or more computer systems, data storage systems, and networking systems.

To mitigate display surface reflectivity, the industry is using such approaches as anti-reflection (AR), anti-glare (AG), or a combination of both. Light sources present in an office environment can present a challenge to the AR as the brightness of the light source is concentrated, specular reflection (point source or line source), and is several orders of magnitude higher than the average office illumination environment.

SUMMARY

Innovative aspects of the subject matter described in this specification may be embodied in a display structure for an information handling system including a top surface layer; a first nanoporous layer; a first polarizer layer; a thin-film-transistor (TFT) layer; a second polarizer layer; and a back light layer, wherein the first nanoporous layer is positioned between the top surface layer and the first polarizer layer, and wherein the first nanoporous layer has an index of refraction less than the index of refraction of the top surface layer to reduce specular reflection of the display structure.

These and other embodiments may each optionally include one or more of the following features. For instance, further comprising a second nanoporous layer positioned between the first polarizer layer and the TFT layer, wherein the second nanoporous layer has an index of refraction less than the index of refraction of the TFT layer to reduce specular reflection of the display structure. Further comprising a first mesoporous layer positioned on the top surface layer. Further comprising a second mesoporous layer positioned between the first nanoporous layer and the first polarizer layer. The top surface layer is glass. The top surface layer is plastic. The index of refraction of the first nanoporous layer is less than 1.5. The index of refraction of the first nanoporous layer is approximately 1.3. The index of refraction of the first nanoporous layer is approximately 1.13. The specular reflection of the display structure is approximately 1.6 percent of incident light upon the display structure. The display structure is a liquid crystal display (LCD) display structure.

Innovative aspects of the subject matter described in this specification may be embodied in a display structure for an information handling system, including a top surface layer; a first nanoporous layer; a polarizer layer; and an organic light emitting diode (OLED) film layer, wherein the first nanoporous layer is positioned between the top surface layer and the polarizer layer, and wherein the first nanoporous layer has an index of refraction less than the index of refraction of the top surface layer to reduce specular reflection of the display structure.

These and other embodiments may each optionally include one or more of the following features. For instance, further comprising a second nanoporous layer positioned between the polarizer layer and the OLED film layer, wherein the second nanoporous layer has an index of refraction less than the index of refraction of the OLED film layer to reduce specular reflection of the display structure. Further comprising a mesoporous layer positioned on the top surface layer. The top surface layer is glass. The top surface layer is plastic. The index of refraction of the nanoporous layer is less than 1.5. The index of refraction of the nanoporous layer is approximately 1.3. The index of refraction of the nanoporous layer is approximately 1.13. The display structure is an OLED display structure.

The details of one or more embodiments of the subject matter described in this specification are set forth in the accompanying drawings and the description below. Other potential features, aspects, and advantages of the subject matter will become apparent from the description, the drawings, and the claims.

BRIEF DESCRIPTION OF DRAWINGS

FIG. **1** illustrates a block diagram of selected elements of an embodiment of an information handling system.

FIG. **2** illustrates a diagram of a user with respect to a display device of the information handling system.

FIG. **3** illustrates an example cross-sectional view of the display device, showing reflected light.

FIG. **4** illustrates an example cross-sectional view of a liquid crystal display (LCD) display device.

FIG. **5** illustrates an example cross-sectional view of the display device of FIG. **4**, including a porous layer.

FIG. **6** illustrates an example cross-sectional view of the display device of FIG. **5**, including a nanoporous layer.

FIG. **7** illustrates an example cross-sectional view of an organic light emitting diode (OLED) display device.

FIG. **8** illustrates an example cross-sectional view of the display device of FIG. **7**, including a nanoporous layer.

FIG. **9** illustrates an example cross-sectional view of the display device of FIG. **8**, including an additional nanoporous layer.

DESCRIPTION OF PARTICULAR EMBODIMENT(S)

This disclosure discusses a display structure for a display device of an information handling system. The display

structure can be a liquid crystal display (LCD) display structure or an organic light emitting diode (OLED) display structure. The display structure can include multiple layers. Incoming light (e.g., from a light source such as a light stand or sunlight from a window) can be incident on the display structure. The display structure can reflect a portion of such incident light. The incident light can be concentrated on a particular section of the display structure making viewing of such section difficult to a user (e.g., a specular reflection "hotspot"). To reduce such brightness of the reflection by the display structure, the display structure can include additional internal layers that have a low index of refraction. Specifically, internal layers of the display structure can each reflect the incident light at an interface of a change of layers. Furthermore, the reflection of such light is based on (directly correlated to) the index of refraction of such layers. By introducing additional layers that are of a lower of index of refraction internal to the display device, the brightness (or power) of such reflected light by the display structure is reduced, providing an improved user experience. The additional layers can include nanoporous layers and/or mesoporous layers that have a low index of refraction as compared to previous layers of the display structure.

In the following description, details are set forth by way of example to facilitate discussion of the disclosed subject matter. It should be apparent to a person of ordinary skill in the field, however, that the disclosed embodiments are exemplary and not exhaustive of all possible embodiments.

For the purposes of this disclosure, an information handling system may include an instrumentality or aggregate of instrumentalities operable to compute, classify, process, transmit, receive, retrieve, originate, switch, store, display, manifest, detect, record, reproduce, handle, or utilize various forms of information, intelligence, or data for business, scientific, control, entertainment, or other purposes. For example, an information handling system may be a personal computer, a PDA, a consumer electronic device, a network storage device, or another suitable device and may vary in size, shape, performance, functionality, and price. The information handling system may include memory, one or more processing resources such as a central processing unit (CPU) or hardware or software control logic. Additional components of the information handling system may include one or more storage devices, one or more communications ports for communicating with external devices as well as various input and output (I/O) devices, such as a keyboard, a mouse, and a video display. The information handling system may also include one or more buses operable to transmit communication between the various hardware components.

For the purposes of this disclosure, computer-readable media may include an instrumentality or aggregation of instrumentalities that may retain data and/or instructions for a period of time. Computer-readable media may include, without limitation, storage media such as a direct access storage device (e.g., a hard disk drive or floppy disk), a sequential access storage device (e.g., a tape disk drive), compact disk, CD-ROM, DVD, random access memory (RAM), read-only memory (ROM), electrically erasable programmable read-only memory (EEPROM), and/or flash memory (SSD); as well as communications media such wires, optical fibers, microwaves, radio waves, and other electromagnetic and/or optical carriers; and/or any combination of the foregoing.

Particular embodiments are best understood by reference to FIGS. **1-9** wherein like numbers are used to indicate like and corresponding parts.

Turning now to the drawings, FIG. **1** illustrates a block diagram depicting selected elements of an information handling system **100** in accordance with some embodiments of the present disclosure. In various embodiments, information handling system **100** may represent different types of portable information handling systems, such as, display devices, head mounted displays, head mount display systems, smart phones, tablet computers, notebook computers, media players, digital cameras, 2-in-1 tablet-laptop combination computers, and wireless organizers, or other types of portable information handling systems. In one or more embodiments, information handling system **100** may also represent other types of information handling systems, including desktop computers, server systems, controllers, and microcontroller units, among other types of information handling systems. Components of information handling system **100** may include, but are not limited to, a processor subsystem **120**, which may comprise one or more processors, and system bus **121** that communicatively couples various system components to processor subsystem **120** including, for example, a memory subsystem **130**, an I/O subsystem **140**, a local storage resource **150**, and a network interface **160**. System bus **121** may represent a variety of suitable types of bus structures, e.g., a memory bus, a peripheral bus, or a local bus using various bus architectures in selected embodiments. For example, such architectures may include, but are not limited to, Micro Channel Architecture (MCA) bus, Industry Standard Architecture (ISA) bus, Enhanced ISA (EISA) bus, Peripheral Component Interconnect (PCI) bus, PCI-Express bus, HyperTransport (HT) bus, and Video Electronics Standards Association (VESA) local bus.

As depicted in FIG. **1**, processor subsystem **120** may comprise a system, device, or apparatus operable to interpret and/or execute program instructions and/or process data, and may include a microprocessor, microcontroller, digital signal processor (DSP), application specific integrated circuit (ASIC), or another digital or analog circuitry configured to interpret and/or execute program instructions and/or process data. In some embodiments, processor subsystem **120** may interpret and/or execute program instructions and/or process data stored locally (e.g., in memory subsystem **130** and/or another component of information handling system). In the same or alternative embodiments, processor subsystem **120** may interpret and/or execute program instructions and/or process data stored remotely (e.g., in network storage resource **170**).

Also in FIG. **1**, memory subsystem **130** may comprise a system, device, or apparatus operable to retain and/or retrieve program instructions and/or data for a period of time (e.g., computer-readable media). Memory subsystem **130** may comprise random access memory (RAM), electrically erasable programmable read-only memory (EEPROM), a PCMCIA card, flash memory, magnetic storage, opto-magnetic storage, and/or a suitable selection and/or array of volatile or non-volatile memory that retains data after power to its associated information handling system, such as system **100**, is powered down.

In information handling system **100**, I/O subsystem **140** may comprise a system, device, or apparatus generally operable to receive and/or transmit data to/from/within information handling system **100**. I/O subsystem **140** may represent, for example, a variety of communication interfaces, graphics interfaces, video interfaces, user input interfaces, and/or peripheral interfaces. In various embodiments, I/O subsystem **140** may be used to support various peripheral devices, such as a touch panel, a display adapter, a

keyboard, an accelerometer, a touch pad, a gyroscope, an IR sensor, a microphone, a sensor, or a camera, or another type of peripheral device.

Local storage resource **150** may comprise computer-readable media (e.g., hard disk drive, floppy disk drive, CD-ROM, and/or other type of rotating storage media, flash memory, EEPROM, and/or another type of solid state storage media) and may be generally operable to store instructions and/or data. Likewise, the network storage resource may comprise computer-readable media (e.g., hard disk drive, floppy disk drive, CD-ROM, and/or other type of rotating storage media, flash memory, EEPROM, and/or other type of solid state storage media) and may be generally operable to store instructions and/or data.

In FIG. **1**, network interface **160** may be a suitable system, apparatus, or device operable to serve as an interface between information handling system **100** and a network **110**. Network interface **160** may enable information handling system **100** to communicate over network **110** using a suitable transmission protocol and/or standard, including, but not limited to, transmission protocols and/or standards enumerated below with respect to the discussion of network **110**. In some embodiments, network interface **160** may be communicatively coupled via network **110** to a network storage resource **170**. Network **110** may be a public network or a private (e.g. corporate) network. The network may be implemented as, or may be a part of, a storage area network (SAN), personal area network (PAN), local area network (LAN), a metropolitan area network (MAN), a wide area network (WAN), a wireless local area network (WLAN), a virtual private network (VPN), an intranet, the Internet or another appropriate architecture or system that facilitates the communication of signals, data and/or messages (generally referred to as data). Network interface **160** may enable wired and/or wireless communications (e.g., NFC or Bluetooth) to and/or from information handling system **100**.

In particular embodiments, network **110** may include one or more routers for routing data between client information handling systems **100** and server information handling systems **100**. A device (e.g., a client information handling system **100** or a server information handling system **100**) on network **110** may be addressed by a corresponding network address including, for example, an Internet protocol (IP) address, an Internet name, a Windows Internet name service (WINS) name, a domain name or other system name. In particular embodiments, network **110** may include one or more logical groupings of network devices such as, for example, one or more sites (e.g. customer sites) or subnets. As an example, a corporate network may include potentially thousands of offices or branches, each with its own subnet (or multiple subnets) having many devices. One or more client information handling systems **100** may communicate with one or more server information handling systems **100** via any suitable connection including, for example, a modem connection, a LAN connection including the Ethernet or a broadband WAN connection including DSL, Cable, Ti, T3, Fiber Optics, Wi-Fi, or a mobile network connection including GSM, GPRS, 3G, or WiMax.

Network **110** may transmit data using a desired storage and/or communication protocol, including, but not limited to, Fibre Channel, Frame Relay, Asynchronous Transfer Mode (ATM), Internet protocol (IP), other packet-based protocol, small computer system interface (SCSI), Internet SCSI (iSCSI), Serial Attached SCSI (SAS) or another transport that operates with the SCSI protocol, advanced technology attachment (ATA), serial ATA (SATA), advanced technology attachment packet interface (ATAPI), serial storage architecture (SSA), integrated drive electronics (IDE), and/or any combination thereof. Network **110** and its various components may be implemented using hardware, software, or any combination thereof.

The information handling system **100** can include display device **190**. For example, the display device **190** can be included by the I/O subsystem **140**, and/or in communication with the I/O subsystem **140**.

The display device **190** can include multiple internal layers, including layers to reduce a brightness (or power) of reflected light that is incident upon the display device **190**. For example, the display device **190** can include nanoporous layers that have a lower index of refraction as compared to existing layers of the display device **190**, which reduces and/or minimizes the brightness (or power) of such reflected light, described further herein.

FIG. **2** illustrates a display device **204**. The display device **204** can be substantially the same, or similar to, the display device **190** of FIG. **1**. The display device **204** can be a monitor for a desktop computing system, a display screen for a laptop computing device, or any display for any type of information handling system (e.g., smartphone computing device, tablet computing device, wearable computing device).

The display device **204** can experience specular reflection. Specifically, a light source **220** can provide incoming light **222** that is incident on the display device **204** predominantly at a location **230**. In some examples, the light source **220** can include multiple light sources of distinct sizes that provide different illumination intensities and/or different color temperatures. The location **230** can have a higher that normal distribution of incoming light from the light source **220** (e.g., the location **230** is a "hotspot") as compared to the rest of the display device **204**. The display device **204** can provide reflected light **240** from the light source **220** to the user **250**. The reflected light **240** can make viewing of the display device **204**, and in particular, the location **230** of the display device **204**, cumbersome and difficult for the user **250**.

FIG. **3** illustrates an example cross-sectional view of an example display stack **302** of the display device **204**. The display stack **302** can include display layers that constitute the display device **204**. To that end, each of the layers of the display device **204** can reflect at least a portion of light that is incident upon it. Specifically, at each interface of layers of the display device **204**, the layers of the display device **204** can reflect at least a portion of light that is incident upon an associated interface. That is, every "switch of materials" of the display stack **302** produces a refection of light that is incident upon it.

For example, the display stack **302** can include a first layer **310***a* and a second layer **310***b* (collectively referred to as layers **310**). Incoming light **322** can be incident upon the display stack **302**, and each layer **310**, such that each layer **310** provides reflected light (e.g., at an intersection of each layer **310**). Specifically, the incoming light **320** is incident upon a surface **330***a* of the first layer **310***a*. The surface **330***a* of the first layer **310***a* is at an interface between the first layer **310***a* and a surrounding environment (e.g., air). A portion of the incoming light **322** that is incident upon the surface **330***a* of the first layer **310***a* can be reflected by the first layer **310***a* as reflected light **340***a*. The brightness (or luminescence or power) of the reflected light **340***a* can be based on the index of refraction of the first layer **310***a* and the index of refraction of the surrounding environment (e.g., air). For example, the ratio of the amount of light that is reflected at surface **330***a* (the reflected light **340***a*) to the amount of light

incident at surface **330***a* (incoming light **322**) can be correlated (based on or a function of) the index of refraction of the first layer **310***a* and the index of refraction of the surrounding environment (e.g., air).

Furthermore, a portion of the incoming light **322** can transmit through the first layer **310***a* and become incident upon a surface **330***b* of the second layer **310***b*, shown as incoming light **322'**. The surface **330***b* of the second layer **310***b* is at an interface of the first layer **310***a* and the second layer **310***b*. A portion of the incoming light **322'** that is incident upon the surface **330***b* of the second layer **310***b* (interface between the first layer **310***a* and the second layer **310***b*) can be reflected by the second layer **310***b* as reflected light **340***b*. The brightness (or luminescence or power) of the reflected light **340***b* can be based on the index of refraction of the first layer **310***a* and the index of refraction of the second layer **310***b*. For example, the ratio of the amount of light that is reflected at surface **330***b* (the reflected light **340***b*) to the amount of light incident at surface **330***b* (incoming light **322'**) can be correlated (based on or a function of) the index of refraction of the first layer **310***a* and the index of refraction of the second layer **310***b*.

Additionally, a portion of the incoming light **322'** can transmit though the second layer **310***b* and become incident upon a surface **330***c* of the second layer **310***b*, shown as incoming light **322"**. The surface **330***c* of the second layer **310***b* is at an interface of the second layer **310***b* and a surrounding environment (e.g. air). A portion of the incoming light **322"** that is incident upon the surface **330***c* of the second layer **310***b* can be reflected by the second layer **310***b* as reflected light **340***c*. The brightness (or luminescence or power) of the reflected light **340***c* can be based on the index of refraction of the second layer **310***b* and the index of refraction of the surrounding environment (e.g., air). For example, the ratio of the amount of light that is reflected at surface **330***c* (the reflected light **340***c*) to the amount of light incident at surface **330***c* (incoming light **322"**) can be correlated (based on or a function of) the index of refraction of the second layer **310***b* and the index of refraction of the surrounding environment (e.g., air).

The reflected light **340***a*, **340***b*, **340***c* is herein referred to as reflected light **340**. The reflected light **340** of the display stack **302** can result in the "hotspot" as compared to the rest of the display stack **302**, similar to the location **230** as the "hotspot" of FIG. **2**.

To that end, it is desirable to mitigate, reduce, and/or minimize a brightness (power, luminescence) of the reflected light **240** and **340**.

FIG. **4** illustrates a cross-sectional view of an example display structure **402** of the display device **204**. The display structure **402** can be a liquid crystal display (LCD) display structure. The display structure **402** can include a top surface layer **404**, a first polarizer layer **408**, a thin-film transistor (TFT) glass layer **410**, a second polarizer layer **412**, and a back light layer **414**. The first polarizer layer **408** is positioned between the top surface layer **404** and the TFT glass layer **410**. The TFT glass layer **410** is positioned between the first polarizer layer **408** and the second polarizer layer **412**. The second polarizer layer **412** is positioned between the TFT glass layer **410** and the back light layer **414**. The top surface layer **404** can include glass, or plastic. The top surface layer **404** can include a cellulose triacetate film (TAC), a polystyrene material, or a cyclo-olefin polymer material.

The display device **204**, and specifically, each of the layers of the display structure **402** can be associated with an index of refraction. To that end, each of the layers of the display structure **402** reflect incident light (e.g., the incoming light **222**, **322**) as reflected light (e.g., reflected light **240**, **340**) based on the index of refraction of the layer. Specifically, the amount of reflection of light that is incident upon a surface (interface) between layers of the display structure **402** is directly correlated to the index of reflection of each such layer (the index of refraction is a physical property of a material of each layer). Thus, the brightness or luminescence (or power) of the reflected light by each layer of the display structure **402** that is incident thereupon is based on the index of refraction of each layer of the display structure **402**.

For example, incoming light can be incident upon a surface **450** of the top surface layer **404** that is at an interface between the top surface layer **404** and the first polarizer layer **408**. The incoming light that is incident upon the surface **450** can be reflected. The reflected light can be based on (directly correlated to) the index of refraction of the top surface layer **404** and the first polarizer layer **408**. That is, the brightness (luminescence, power) of the reflected light at the surface **450** between the top surface layer **404** and the first polarizer layer **408** can have a magnitude. For example, approximately 4% of the light that is incident upon the surface **450** between the top surface layer **404** and the first polarizer layer **408** can be reflected.

FIG. **5** illustrates a cross-sectional view of an example display structure **502** of the display device **204**. The display structure **502** can include the display structure **402** of FIG. **4**, and further include a porous layer **506**. Specifically, the porous layer **506** is positioned between the top surface layer **404** and the first polarizer layer **408**.

In some examples, the porous layer **506** includes a nanoporous material. For example, nanoporous materials can include a porous medium or a porous material that includes pores (voids). Nanoporous material can consist of a regular organic or inorganic framework supporting a regular, porous structure. The skeletal portion of the material is often called the "matrix" or "frame." The pores are typically filled with a fluid (liquid or gas). The size of the pores is generally 100 nanometers or smaller. Two examples of bulk nanoporous materials include activated carbon and zeolites.

In some examples, the porous layer **506** includes a mesoporous material. A mesoporous material is a material containing pores with diameters between 2 and 50 nm. Typical mesoporous materials include silica and alumina that have similarly-sized mesopores. Mesoporous oxides of niobium, tantalum, titanium, zirconium, cerium and tin are also possible. Another example of a mesoporous material is mesoporous carbon.

In some examples, that porous layer **506** can have an index of refraction less than the index of refraction of the top surface layer **404**. In some examples, the porous layer **506** can have an index of refraction less than the index of refraction of the first polarizer layer **408**. For example, when the porous layer **506** includes a nanoporous material, the porous layer **506** can have an index of refraction less than 1.5; in some examples, the porous layer **506** can have an index of refraction of approximately 1.3; and in some examples, the porous layer **506** can have an index of refraction of approximately 1.13. For example, when the porous layer **506** includes a mesoporous material, the porous layer **506** can have an index of refraction less than 1.5; in some examples, the porous layer **506** can have an index of refraction of approximately 1.34.

In some examples, the porous layer **506** can include mesoporous material and nanoporous material. That is, the porous layer **506** includes both a mesoporous layer and a

nanoporous layer. In some examples, when the porous layer **506** includes both a mesoporous layer and a nanoporous layer, the nanoporous layer is positioned between the top surface layer **404** and the mesoporous layer; and the mesoporous layer is positioned between the nanoporous layer and the first polarizer layer **408**.

Incoming light can be incident upon a surface **550** of the top surface layer **404** that is at an interface between the top surface layer **404** and the porous layer **506**. The incoming light that is incident upon the surface **550** can be reflected. The reflected light can be based on (directly correlated to) the index of refraction of the top surface layer **404** and the porous layer **506**. That is, the brightness (luminescence, power) of the reflected light at the surface **550** between the top surface layer **404** and the porous layer **506** can have a magnitude.

By introducing the porous layer **506** between the top surface layer **404** and the first polarizer layer **408**, the amount of light reflected by the top surface layer **404** can be reduced and/or minimized—the brightness (luminescence or power) of the reflected light is reduced. Specifically, as a result of the porous layer **506** having an index of refraction less than the index of refraction of the top surface layer **404** and/or the first polarizer layer **408**, the magnitude of the reflected light at the surface **550** between the top surface layer **404** and the porous layer **506** can be less than the magnitude of the reflected light at the surface **450** between the top surface layer **404** and the first polarizer layer **408** (as described above with respect to FIG. **4**). In short, the porous layer **506** has an index of refraction less than the index of refraction of the top surface layer **404** to reduce specular reflection of the display structure **502**.

For example, when the porous layer **506** includes a nanoporous material, less than 2.5 percent of the light that is incident upon the surface **550** between the top surface layer **404** and porous layer **506** is reflected. For example, approximately 1.6 percent of the light that is incident upon the surface **550** between the top surface layer **404** and porous layer **506** is reflected. For example, between 1-2.5% percent of the light that is incident upon the surface **550** between the top surface layer **404** and porous layer **506** is reflected.

Referring back to FIG. **4**, incoming light can be incident upon a surface **460** of the TFT glass layer **410** that is at an interface between the TFT glass layer **410** and the first polarizer layer **408**. The incoming light that is incident upon the surface **460** can be reflected. The reflected light can be based on (directly correlated to) the index of refraction of the TFT glass layer **410** and the first polarizer layer **408**. That is, the brightness (luminescence, power) of the reflected light at the surface **460** between the TFT glass layer **410** and the first polarizer layer **408** can have a magnitude.

FIG. **6** illustrates a cross-sectional view of an example display structure **602** of the display device **204**. The display structure **602** can include the display structure **502** of FIG. **5**, and further include a nanoporous layer **606**. Specifically, the nanoporous layer **606** is positioned between the first polarizer layer **408** and the TFT glass layer **410**. The additional nanoporous layer **606** is substantially the same as the porous layer **506** when the porous layer **506** includes the nanoporous material.

In some examples, that nanoporous layer **606** can have an index of refraction less than the index of refraction of the TFT glass layer **410**. In some examples, the nanoporous layer **606** can have an index of refraction less than the index of refraction of the first polarizer layer **108**. In some examples, the nanoporous layer **606** can have an index of refraction less than 1.5. In some examples, the nanoporous layer **606** can have an index of refraction of approximately 1.3. In some examples, the nanoporous layer **606** can have an index of refraction of approximately 1.13.

Incoming light can be incident upon a surface **650** of the TFT glass layer **410** that is at an interface between the TFT glass layer **410** and the additional nanoporous layer **606**. The incoming light that is incident upon the surface **650** can be reflected. The reflected light can be based on (directly correlated to) the index of refraction of the TFT glass layer **410** and the nanoporous layer **606**. That is, the brightness (luminescence, power) of the reflected light at the surface **650** between the TFT glass layer **410** and the additional nanoporous layer **606** can have a magnitude.

By introducing the additional nanoporous layer **606** between the TFT glass layer **410** and the first polarizer layer **408**, the amount of light reflected by the TFT glass layer **410** can be reduced and/or minimized—the brightness (luminescence or power) of the reflected light is reduced. Specifically, as a result of the additional nanoporous layer **606** having an index of refraction less than the index of refraction of the TFT glass layer **410** and/or the first polarizer layer **408**, the magnitude of the reflected light at the surface **650** between the TFT glass layer **410** and the additional nanoporous layer **606** can be less than the magnitude of the reflected light at the surface **460** between the TFT glass layer **410** and the first polarizer layer **408** (as described above with respect to FIG. **4**). In short, the additional nanoporous layer **606** has an index of refraction less than the index of refraction of the TFT glass layer **410** to reduce specular reflection of the display structure **602**.

For example, less than 2.5 percent of the light that is incident upon the surface **650** between the TFT glass layer **410** and the additional nanoporous layer **606** is reflected. For example, approximately 1.6 percent of the light that is incident upon the surface **650** between the TFT glass layer **410** and the additional nanoporous layer **606** is reflected. For example, between 1-2.5% percent of the light that is incident upon the surface **650** between the TFT glass layer **410** and the additional nanoporous layer **606** is reflected.

Referring back to FIG. **4**, incoming light can be incident upon a surface **470** of the top surface layer **404** that is at an interface between the top surface layer **404** and the surrounding environment (e.g., air). The incoming light that is incident upon the surface **470** can be reflected. The reflected light can be based on (directly correlated to) the index of refraction of the top surface layer **404** and the surrounding environment.

In some examples, either of the display structures **502**, **602** can include a mesoporous layer positioned on the top surface layer **404**. The mesoporous layer is substantially the same as the porous layer **506** when the porous layer **506** includes the mesoporous material. In some examples, that mesoporous layer positioned on the top surface layer **404** can have an index of refraction less than the index of refraction of top surface layer **404**. In some examples, the mesoporous layer can have an index of refraction of approximately 1.34.

By introducing the mesoporous layer on the surface of the top surface layer **404**, the amount of light reflected by the top surface layer **404** at the surface **470** can be reduced and/or minimized—the brightness (luminescence or power) of the reflected light is reduced. Specifically, as a result of the mesoporous layer having an index of refraction less than the index of refraction of the top surface layer **404**, the magnitude of the reflected light at the surface **470** of the top surface layer **404** can be reduced and/or minimized.

FIG. **7** illustrates a cross-sectional view of an example display structure **702** of the display device **204**. The display structure **402** can be an organic light emitting diode (OLED) display structure. The display structure **702** can include a top surface layer **704**, a polarizer layer **708**, and an organic light emitting diode (OLED) film layer **710**. The polarizer layer **708** is positioned between the top surface layer **704** and the OLED film layer **710**. The top surface layer **704** can be glass, or plastic. The top surface layer **704** can include a cellulose triacetate film (TAC), a polystyrene material, or a cyclo-olefin polymer material.

The display device **204**, and specifically, each of the layers of the display structure **702** can be associated with an index of refraction. To that end, each of the layers of the display structure **402** reflect incident light (e.g., the incoming light **222**, **322**) as reflected light (e.g., reflected light **240**, **340**) based on the index of refraction of the layer. Specifically, the amount of reflection of light that is incident upon a surface (interface) between layers of the display structure **702** is directly correlated to the index of reflection of each such layer (the index of refraction is a physical property of a material of each layer). Thus, the brightness or luminescence (or power) of the reflected light by each layer of the display structure **702** that is incident thereupon is based on the index of refraction of each layer of the display structure **702**.

For example, incoming light can be incident upon a surface **750** of the top surface layer **704** that is at an interface between the top surface layer **704** and the polarizer layer **708**. The incoming light that is incident upon the surface **750** can be reflected. The reflected light can be based on (directly correlated to) the index of refraction of the top surface layer **704** and the polarizer layer **708**. That is, the brightness (luminescence, power) of the reflected light at the surface **750** between the top surface layer **704** and the polarizer layer **708** can have a magnitude. For example, approximately 4% of the light that is incident upon the surface **750** between the top surface layer **704** and the polarizer layer **708** can be reflected.

FIG. **8** illustrates a cross-sectional view of an example display structure **802** of the display device **204**. The display structure **802** can include the display structure **702** of FIG. **7**, and further include a nanoporous layer **806**. Specifically, the nanoporous layer **806** is positioned between the top surface layer **704** and the polarizer layer **708**. The nanoporous layer **806** can be substantially the same as the nanoporous layer/material of the porous layer **506** described above with respect to FIG. **5**.

In some examples, that nanoporous layer **806** can have an index of refraction less than the index of refraction of the top surface layer **704**. In some examples, the nanoporous layer **806** can have an index of refraction less than the index of refraction of the polarizer layer **708**. In some examples, the nanoporous layer **806** can have an index of refraction less than 1.5. In some examples, the nanoporous layer **806** can have an index of refraction of approximately 1.3. In some examples, the nanoporous layer **806** can have an index of refraction of approximately 1.13.

Incoming light can be incident upon a surface **850** of the top surface layer **704** that is at an interface between the top surface layer **704** and the nanoporous layer **806**. The incoming light that is incident upon the surface **850** can be reflected. The reflected light can be based on (directly correlated to) the index of refraction of the top surface layer **704** and the nanoporous layer **806**. That is, the brightness (luminescence, power) of the reflected light at the surface **850** between the top surface layer **704** and the nanoporous layer **806** can have a magnitude.

By introducing the nanoporous layer **806** between the top surface layer **704** and the polarizer layer **708**, the amount of light reflected by the top surface layer **704** can be reduced and/or minimized—the brightness (luminescence or power) of the reflected light is reduced. Specifically, as a result of the nanoporous layer **806** having an index of refraction less than the index of refraction of the top surface layer **704** and/or the polarizer layer **708**, the magnitude of the reflected light at the surface **850** between the top surface layer **704** and the nanoporous layer **806** can be less than the magnitude of the reflected light at the surface **750** between the top surface layer **704** and the polarizer layer **708** (as described above with respect to FIG. **7**). In short, the nanoporous layer **806** has an index of refraction less than the index of refraction of the top surface layer **704** to reduce specular reflection of the display structure **802**.

For example, less than 2.5 percent of the light that is incident upon the surface **850** between the top surface layer **704** and nanoporous layer **806** is reflected. For example, approximately 1.6 percent of the light that is incident upon the surface **850** between the top surface layer **704** and nanoporous layer **806** is reflected. For example, between 1-2.5% percent of the light that is incident upon the surface **850** between the top surface layer **704** and nanoporous layer **806** is reflected.

Referring back to FIG. **7**, incoming light can be incident upon a surface **760** of the OLED film layer **710** that is at an interface between the OLED film layer **710** and the polarizer layer **708**. The incoming light that is incident upon the surface **760** can be reflected. The reflected light can be based on (directly correlated to) the index of refraction of the OLED film layer **710** and the polarizer layer **708**. That is, the brightness (luminescence, power) of the reflected light at the surface **760** between the OLED film layer **710** and the polarizer layer **712** can have a magnitude.

FIG. **9** illustrates a cross-sectional view of an example display structure **902** of the display device **204**. The display structure **902** can include the display structure **702** of FIG. **7**, and further include an additional nanoporous layer **906**. Specifically, the additional nanoporous layer **906** is positioned between the polarizer layer **708** and the OLED film layer **710**. The additional nanoporous layer **906** is substantially the same as the nanoporous layer **806**.

In some examples, that nanoporous layer **906** can have an index of refraction less than the index of refraction of OLED film layer **710**. In some examples, the nanoporous layer **906** can have an index of refraction less than the index of refraction of the polarizer layer **712**. In some examples, the nanoporous layer **906** can have an index of refraction less than 1.5. In some examples, the nanoporous layer **906** can have an index of refraction of approximately 1.3. In some examples, the nanoporous layer **906** can have an index of refraction of approximately 1.13.

Incoming light can be incident upon a surface **950** of the OLED film layer **710** that is at an interface between the OLED film layer **710** and the additional nanoporous layer **906**. The incoming light that is incident upon the surface **950** can be reflected. The reflected light can be based on (directly correlated to) the index of refraction of the OLED film layer **710** and the additional nanoporous layer **906**. That is, the brightness (luminescence, power) of the reflected light at the surface **950** between the OLED film layer **710** and the additional nanoporous layer **906** can have a magnitude.

By introducing the additional nanoporous layer **906** between the OLED film layer **710** and the polarizer layer

708, the amount of light reflected by the OLED film layer 710 can be reduced and/or minimized—the brightness (luminescence or power) of the reflected light is reduced. Specifically, as a result of the additional nanoporous layer 906 having an index of refraction less than the index of refraction of the OLED film layer 710 and/or the polarizer layer 708, the magnitude of the reflected light at the surface 950 between the OLED film layer 710 and the additional nanoporous layer 906 can be less than the magnitude of the reflected light at the surface 760 between the OLED film layer 710 and the polarizer layer 708 (as described above with respect to FIG. 7). In short, the additional nanoporous layer 906 has an index of refraction less than the index of refraction of the OLED film layer 710 to reduce specular reflection of the display structure 902.

For example, less than 2.5 percent of the light that is incident upon the surface 950 between the OLED film layer 710 and the additional nanoporous layer 906 is reflected. For example, approximately 1.6 percent of the light that is incident upon the surface 950 between the OLED film layer 710 and the additional nanoporous layer 906 is reflected. For example, between 1-2.5% percent of the light that is incident upon the surface 950 between the OLED film layer 710 and the additional nanoporous layer 906 is reflected.

The above disclosed subject matter is to be considered illustrative, and not restrictive, and the appended claims are intended to cover all such modifications, enhancements, and other embodiments which fall within the true spirit and scope of the present disclosure. Thus, to the maximum extent allowed by law, the scope of the present disclosure is to be determined by the broadest permissible interpretation of the following claims and their equivalents, and shall not be restricted or limited by the foregoing detailed description.

Herein, "or" is inclusive and not exclusive, unless expressly indicated otherwise or indicated otherwise by context. Therefore, herein, "A or B" means "A, B, or both," unless expressly indicated otherwise or indicated otherwise by context. Moreover, "and" is both joint and several, unless expressly indicated otherwise or indicated otherwise by context. Therefore, herein, "A and B" means "A and B, jointly or severally," unless expressly indicated otherwise or indicated other-wise by context.

The scope of this disclosure encompasses all changes, substitutions, variations, alterations, and modifications to the example embodiments described or illustrated herein that a person having ordinary skill in the art would comprehend. The scope of this disclosure is not limited to the example embodiments described or illustrated herein. Moreover, although this disclosure describes and illustrates respective embodiments herein as including particular components, elements, features, functions, operations, or steps, any of these embodiments may include any combination or permutation of any of the components, elements, features, functions, operations, or steps described or illustrated anywhere herein that a person having ordinary skill in the art would comprehend. Furthermore, reference in the appended claims to an apparatus or system or a component of an apparatus or system being adapted to, arranged to, capable of, configured to, enabled to, operable to, or operative to perform a particular function encompasses that apparatus, system, component, whether or not it or that particular function is activated, turned on, or unlocked, as long as that apparatus, system, or component is so adapted, arranged, capable, configured, enabled, operable, or operative.

What is claimed is:

1. A display structure for an information handling system, including:

a top surface layer;
a first nanoporous layer;
a first polarizer layer;
a second nanoporous layer;
a thin-film-transistor (TFT) layer;
a second polarizer layer; and
a back light layer,
wherein the first nanoporous layer is positioned between the top surface layer and the first polarizer layer, and the second nanoporous layer is positioned between the first polarizer layer and the TFT layer, and
wherein the first nanoporous layer has an index of refraction less than an index of refraction of the top surface layer to reduce specular reflection of the display structure, and the second nanoporous layer has an index of refraction less than an index of refraction of the TFT layer to reduce specular reflection of the display structure.

2. The display structure of claim 1, further comprising a mesoporous layer positioned on the top surface layer.

3. The display structure of claim 1, further comprising a mesoporous layer positioned between the first nanoporous layer and the first polarizer layer.

4. The display structure of claim 1, wherein the top surface layer is glass.

5. The display structure of claim 1, wherein the top surface layer is plastic.

6. The display structure of claim 1, wherein the index of refraction of the first nanoporous layer is less than 1.5.

7. The display structure of claim 1, wherein the index of refraction of the first nanoporous layer is approximately 1.3.

8. The display structure of claim 1, wherein the index of refraction of the first nanoporous layer is approximately 1.13.

9. The display structure of claim 1, wherein the specular reflection of the display structure is approximately 1.6 percent of incident light upon the display structure.

10. The display structure of claim 1, wherein the display structure is a liquid crystal display (LCD) display structure.

11. A display structure for an information handling system, including:

a top surface layer;
a first nanoporous layer;
a polarizer layer;
a second nanoporous layer; and
an organic light emitting diode (OLED) film layer,
wherein the first nanoporous layer is positioned between the top surface layer and the polarizer layer, wherein the second nanoporous layer is positioned between the polarizer layer and the OLED film layer, and
wherein the first nanoporous layer has an index of refraction less than an index of refraction of the top surface layer to reduce specular reflection of the display structure, and wherein the second nanoporous layer has an index of refraction less than an index of refraction of the OLED film layer to reduce specular reflection of the display structure.

12. The display structure of claim 11, further comprising a mesoporous layer positioned on the top surface layer.

13. The display structure of claim 11, wherein the top surface layer is glass.

14. The display structure of claim 11, wherein the top surface layer is plastic.

15. The display structure of claim 11, wherein the index of refraction of the nanoporous layer is less than 1.5.

16. The display structure of claim 11, wherein the index of refraction of the nanoporous layer is approximately 1.3.

17. The display structure of claim **11**, wherein the index of refraction of the nanoporous layer is approximately 1.13.

18. The display structure of claim **11**, wherein the display structure is an OLED display structure.

* * * * *