UNITED STATES PATENT AND TRADEMARK OFFICE

BEFORE THE PATENT TRIAL AND APPEAL BOARD

APPLE INC.,
Petitioner,

v.

SPEIR TECHNOLOGIES LTD.,
Patent Owner.

Case IPR2023-00542
U.S. Patent No. 7,765,399

PATENT OWNER'S PRELIMINARY RESPONSE TO PETITION

Mail Stop "PATENT BOARD"
Patent Trial and Appeal Board
U.S. Patent and Trademark Office
P.O. Box 1450
Alexandria, VA 22313-1450

TABLE OF CONTENTS

Page

I. INTRODUCTION 1

II. INSTITUTION SHOULD BE DENIED UNDER § 314(a) 3

A. Factor 1 weighs against institution. 4

B. Factor 2 weighs against institution and Factors 3, 4, 5, and 7 are neutral. 5

C. Factor 6 weighs heavily against institution, as only a subset of the claims in this Petition and none of the claims in the Second Petition are asserted in the litigation. 6

D. Summary of Factors 9

III. THE PETITION RELIES ON IMPERMISSIBLE HINDSIGHT RECONSTRUCTION TO JUSTIFY THE COMBINATION OF MAREK AND SKARINE. 9

A. Marek Teaches an Embodiment with a Portable Mobile Computing Device Rendering Any Purported Combination with Skarine Unnecessary. 9

IV. CONCLUSION 12

V. MANDATORY NOTICES – Related Matters – 37 C.F.R. §42.8(b)(2) 13

TABLE OF AUTHORITIES

Cases

Adobe Inc. v. Synkloud Techs., LLC,
IPR2020-01393, Paper 8 (PTAB Mar. 11, 2021) 7

Apple v. UUSI d/b/a Nartron,
IPR2019-00358, Paper 12 (PTAB Aug. 5, 2019) 7

ATD Corp. v. Lydall, Inc.,
159 F.3d 534 (Fed. Cir. 1998) 12

Dolby Labs., Inc. v. Intertrust Techns. Corp.,
IPR2020-01106, Paper 12 (PTAB Jan 5, 2021) 7

General Plastic Indus. Co. v. Canon Kabushiki Kaisha,
IPR2016-01357, Paper 19 (Sept. 6, 2017) (precedential) 1, 3, 4, 6, 7, 9, 12

Sensonics Inc. v. Aerosonic Corp.,
81 F.3d 1566 (Fed. Cir. 1996) 12

Statutes

35 U.S.C. § 314(a) 1, 2, 3, 9, 12

35 U.S.C. § 316(b) 6

PATENT OWNER'S EXHIBIT LIST

Exhibit No.	Description
2001	[Second Amended] Preliminary Disclosure of Asserted Claims and Infringement Contentions to Defendant Apple Inc., *Speir Technologies Ltd. v. Apple Inc.*, Case 6:22-cv-00077-ADA (WDTX) (December 7, 2022)

I. INTRODUCTION

Patent Owner Speir Technologies Ltd. ("Patent Owner") submits this preliminary response to Petitioner Apple Inc.'s ("Petitioner") Petition for *inter partes* review of U.S. Patent No. 7,765,399 ("the '399 patent") in IPR2023-00542.

First, the Board should exercise its discretion to deny the Petition under § 314(a) because this is the type of proceeding that the Board's precedential decision—*General Plastic*—was developed to prevent. Petitioner has filed two petitions challenging the claims of the '399 patent: the petition in this IPR, Petition for *Inter Partes* Review of United States Patent No. 7,765,399 Pursuant to 35 U.S.C. §§ 311–319, 37 C.F.R. § 42, ("Petition"), Paper 2, and the petition in IPR2023-0543, also titled Petition for *Inter Partes* Review of United States Patent No. 7,765,399 Pursuant to 35 U.S.C. §§ 311–319, 37 C.F.R. § 42 ("Second Petition"), IPR2023-0543, Paper 2.

Here, the majority of *General Plastic* factors weigh against institution in light of copending IPR2023-00543 challenging similar claims of the '399 patent with the same prior art refences - U.S. Patent No. 7,716,720 ("Marek") and U.S. Patent App. Pub. No. 2005/0190159 ("Skarine"). *See, e.g.*, Exhibit 1003, Declaration of Dr. Sandeep Chatterjee ("Chatterjee Dec.") at 2.[1] Notably, both IPR2023-00542 and

[1] References to Exhibit page numbers herein are to the numbered exhibit page numbers and not to the original page numbering. For example, the above citation is to page 2 of Exhibit 1003 which was originally numbered page i in the Chatterjee Declaration.

IPR2023-00543 rely on the same Declaration by Dr. Chatterjee. As such, the Board should deny the Petition under § 314(a). *See, e.g.*, Exhibit 1046, Memorandum: Interim Procedure for Discretionary Denials in AIA Post-Grant Proceedings with Parallel District Court Litigation (June 21, 2022), at 9 (explaining that PTAB "retains the right to deny institution for other reasons under 35 U.S.C. §§ 314(a), 324(a), and 325(d). For example, the PTAB may deny institution if other pertinent circumstances are present, such as abuse of process by a petitioner.").

Second, the Board should deny institution because Petitioner fails to establish a reasonable likelihood of unpatentability for the challenged independent claims – claims 1 and 9. As an initial matter, the Petition fails to establish why a person of ordinary skill in the art ("POSITA") would modify the System for Providing Secure and Trusted Computing Environments disclosed in Marek to include the limitations of the challenged claims absent hindsight reconstruction. Marek teaches a secure computing module with a wireless module 902 that is interfaced with an untrusted PDA 1014, although not in a way that teaches the limitations of the challenged claims. *See, e.g.*, Ex. 1004 at 12-13, Figs. 10, 11.

Petitioner does not rely on this disclosure in Marek but instead proposes that a POSITA would look to a reference entitled "Keyboard for Mobile Devices", U.S. Patent App. Pub. No. 2005/0190159 ("Skarine"). Petitioner's purported basis for combining the teachings of a Keyboard for Mobile Devices with a

System for Providing Secure and Trusted Computing Environments is to provide audio functionality in the untrusted host mobile device of the combination, (Paper 2, "Petition," at 14), but the challenged claims neither recite nor require audio functionality. There is no motivation to combine these references absent hindsight reconstruction because the primary reference, Marek, already teaches wireless communications with a Secure Computing Module interfaced with an untrusted PDA, just not in the way disclosed and claimed in the '399 patent.

Even if the Board concludes that a discretionary denial is not appropriate, Petitioner has not established a reasonable likelihood of unpatentability under any ground or challenged claim. Accordingly, the Board should deny institution.

II. INSTITUTION SHOULD BE DENIED UNDER § 314(a)

35 U.S.C. § 314(a) gives the Board discretion to deny instituting "follow on" petitions. *General Plastic Indus. Co. v. Canon Kabushiki Kaisha*, IPR2016-01357, Paper 19 (Sept. 6, 2017) (precedential).

The Board has set forth seven factors for determining whether discretionary denial is appropriate (the "*General Plastic* factors"):

1. whether the same petitioner previously filed a petition directed to the same claims of the same patent;

2. whether at the time of filing of the first petition the petitioner knew of the prior art asserted in the second petition or should have known of it;

3. whether at the time of filing of the second petition the petitioner already received the patent owner's preliminary response to the first petition or received the Board's decision on whether to institute review in the first petition;

4. the length of time that elapsed between the time the petitioner learned of the prior art asserted in the second petition and the filing of the second petition;

5. whether the petitioner provides adequate explanation for the time elapsed between the filings of multiple petitions directed to the same claims of the same patent;

6. the finite resources of the Board; and

7. the requirement under 35 U.S.C. § 316(a)(11) to issue a final determination not later than 1 year after the date on which the Director notices institution of review.

General Plastic Indus. Co., IPR2016-01357, Paper 19 at 16.

Here, the *General Plastic* factors weigh against institution or are neutral.

A. Factor 1 weighs against institution.

Factor 1 relates to successive petitions filed by the same petitioner, which is not precisely at issue here because petitioner filed simultaneous petitions that are directed against closely related claims of the same patent. In the instant Petition, petitioner challenges claims 1-7 and 9-10 of the '399 patent. Paper 2 at 2. In IPR2023-00543, petitioner challenges claims 12, 13, and 15-18 of the '399 patent. *See* Petitioner's Notice Ranking Petitions and Explaining Material Differences Between Petitions Against U.S. Patent No. 7,765,399 ("Notice"), Paper 3 at 1.

The claims are closely related because they are directed to the same inventive concepts and, notably, petitioner asserts that the same combination of the same two references renders all of the challenged claims obvious in both IPR2023-00542 and IPR-2023-00543. *See* Ex. 1003, Chatterjee Dec., at 2 (Ground 1A – Claims 1-7, 9-10, 12-13, and 15-18 would have been obvious over Marek and Skarine). If the claims were not closely related, then petitioner would not have been able to rely on the same combination of the same two references and the same declaration making essentially the same conclusory arguments against all of the claims.

B. Factor 2 weighs against institution and Factors 3, 4, 5, and 7 are neutral.

Factor 2 weighs against institution because petitioner relies upon the same combination of the same two references – Marek and Skarine – in both petitions.[2] Petitioner plainly knew of the prior art asserted in the first petition when it filed the second petition. Because both petitions were simultaneously filed, factors 3, 4, 5, and 7 are neutral.

[2] Petitioner's reliance on a third reference, U.S. Patent Pub. No. 2004/0082368 ("Yoon"), for a duplicative challenge to claims 4 and 5 that still relies on the combination of Marek and Skarine or a fourth reference, U.S. Patent No. 7,571,475 ("Moon"), for a duplicative challenge to claims 9 and 10 that also relies on the combination of Marek and Skarine does not change the basic fact that petitioner is relying on the same two references – Marek and Skarine – for every one of its invalidity challenges.

C. Factor 6 weighs heavily against institution, as only a subset of the claims in this Petition and none of the claims in the Second Petition are asserted in the litigation.

Factor 6 relates to efficiency and the finite resources of the Board. *See General Plastic* at 16. This factor weighs heavily against institution.

As stated in the Trial Practice Guide, "one petition should be sufficient to challenge the claims of a patent in most situations. Two or more petitions filed against the same patent at or about the same time (e.g., before the first preliminary response by the patent owner) may place **a substantial and unnecessary burden on the Board** and the patent owner and could raise fairness, timing, and **efficiency** concerns. *See* 35 U.S.C. § 316(b). In addition, multiple petitions by a petitioner are not necessary in the vast majority of cases. To date, a substantial majority of patents have been challenged with a single petition." Patent Trial and Appeal Board Consolidated Trial Practice Guide (November 2019), 59 (emphasis added).

This is not a situation where more than one petition is necessary. As an initial matter, Patent Owner has **not** asserted a large number of claims in litigation. In fact, Patent Owner has only asserted <u>eight (8)</u> claims in litigation. *See* Exhibit 2001, [Second Amended] Preliminary Disclosure of Asserted Claims and Infringement Contentions to Defendant Apple Inc., *Speir Technologies Ltd. v. Apple Inc.*, Case 6:22-cv-00077-ADA (WDTX) (December 7, 2022).

Nevertheless, petitioner has challenged **non-asserted** claims in both the instant petition (claim 10) and the Second Petition (claims 12, 13, and 15-18).

Petitioner's reliance on *Dolby Laboratories, Inc. v. Intertrust Technologies Corp.* is inapposite. *See* Notice, Paper 3 at 4. In *Dolby*, the patent owner asserted twenty-eight (28) claims in litigation. *Dolby Labs., Inc. v. Intertrust Techns. Corp.*, IPR2020-01106, Paper 12 at 19 (PTAB Jan 5, 2021). Even then, the Board denied institution on one of the petitions. Paper 12 at 20 ("Concurrently with this Decision, we are denying institution on one of these petitions (IPR2020-01104), which challenged ten of those twenty-eight claims."). Petitioner's citation to *Apple v. UUSI d/b/a Nartron* is equally inapposite. Paper 3 at 5. In that case, five of the *General Plastic* factors weighed against exercising the Board's discretion to deny institution and there were potentially 117 claims at issue, of which claims 37-39, 94, 96-99, 101-109, and 115-117 had been asserted in litigation. *Apple v. UUSI d/b/a Nartron*, IPR2019-00358, Paper 12 at 2, 19-20 (PTAB Aug. 5, 2019). In *Adobe Inc. v. Synkloud Techs., LLC*, the Patent Owner acquiesced to multiple petitions. *Adobe Inc. v. Synkloud Techs., LLC,* IPR2020-01393, Paper 8 at 9 (PTAB Mar. 11, 2021) ("Patent Owner did not file a response to Petitioner's Explanation or make any arguments in its Preliminary Response regarding the propriety of Petitioner having filed two petitions challenging the '686 patent.").

These petitions are remarkably similar, as petitioner acknowledges. Paper 3 at 4 ("the asserted grounds are similar between the two petitions"). In fact, pages 3-19 of the Petition and pages 3-19 of the Second Petition are essentially identical. *See* Paper 2 at 3-19 and Second Petition at 3-19. Although the claims of the '399 patent are patentably distinct, there are numerous common elements that preclude a reasonable justification for the substantial and unnecessary burdens on the Board and the patent owner, let alone the fairness and efficiency concerns that multiple petitions raise. For example, independent claims 1 and 12 both recite classified and unclassified data, a secure processor, a non-secure processor, a trusted microprocessor, an untrusted microprocessor, a trusted operating system, an untrusted operating system, a cryptographic engine, a secure human/machine interface, and a non-secure human/machine interface. *See* Paper 2 at vi (Claim Listing of Claim 1) and Second Petition at vi (Claim Listing of Claim 12). To that end, there is substantial overlap among the claims.

This case does not present circumstances in which more than one petition may be necessary. Accordingly, the Board should exercise its discretion to deny institution rather than unfairly and inefficiently subjecting itself and Patent Owner to substantial and unnecessary burdens.

D. Summary of Factors

Factor 1	Weighs against institution
Factor 2	Weighs against institution
Factor 3	Neutral
Factor 4	Neutral
Factor 5	Neutral
Factor 6	Weighs strongly against institution
Factor 7	Neutral

In summary, one *General Plastic* factor weigh strongly against institution; two factors weigh against institution and four factors are neutral. Under § 314(a) and the totality of *General Plastic* factors, institution should be denied.

III. THE PETITION RELIES ON IMPERMISSIBLE HINDSIGHT RECONSTRUCTION TO JUSTIFY THE COMBINATION OF MAREK AND SKARINE.

Although Patent Owner chooses to reserve the bulk of its arguments on the merits at this stage, there is a threshold issue which should be addressed at the outset. The Petition fails to establish why a person of ordinary skill in the art ("POSITA") would modify the System for Providing Secure and Trusted Computing Environments disclosed in Marek to include the limitations of the challenged claims absent hindsight reconstruction.

A. Marek Teaches an Embodiment with a Portable Mobile Computing Device Rendering Any Purported Combination with

Skarine Unnecessary.

Marek teaches a secure computing module with a wireless module 902 that is interfaced with an untrusted PDA 1014, although not in a way that teaches the limitations of the challenged claims. *See, e.g.,* Ex. 1004 at 12-13, Figs. 10, 11.

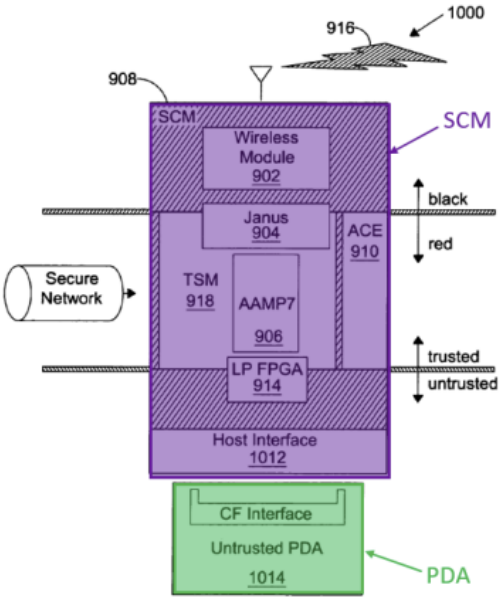

FIG. 10

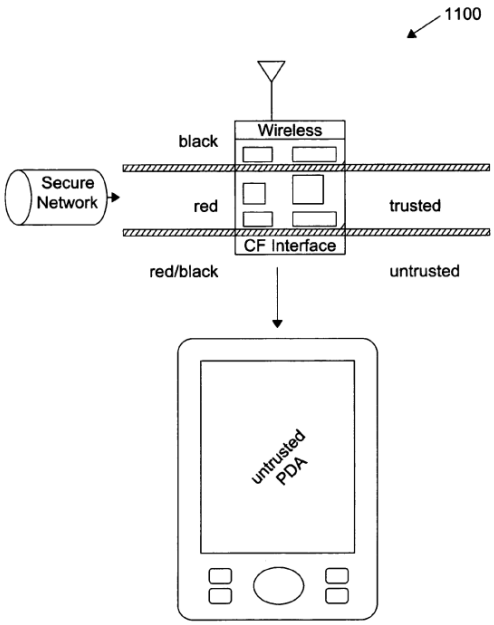

FIG. 11

Excerpt from Marek, Fig. 10 (annotated)

Paper 2 at 7, Ex. 1004 at 13. Petitioner does not rely on this disclosure in Marek and instead proposes that a POSITA would look to a reference entitled "Keyboard for Mobile Devices", U.S. Patent App. Pub. No. 2005/0190159 ("Skarine"). Paper 2 at 10-13.

Petitioner's purported basis for combining the teachings of a Keyboard for Mobile Devices with a System for Providing Secure and Trusted Computing

Environments is to provide audio functionality in the untrusted host mobile device of the combination. "[A] POSITA would have been motivated to pursue this implementation because doing so enables the mobile device to be used to carry out "'voice communications,' …." Paper 2 at 15. *See also*, *Id.* at 15-16.

But the challenged claims neither recite nor require audio functionality. Although certain of the unchallenged claims recite an "audio interface" or "communicating classified audio information" or "communicating unclassified audio information," none of the challenged claims include these limitations. *See, e.g.*, Exhibit 1001,'399 Patent at 12:49-52, 14:34-36 (claims 11 and 19).

There is no motivation to combine these references absent hindsight reconstruction because the primary reference, Marek, already teaches wireless communications with a Secure Computing Module interfaced with an untrusted PDA, just not in the way disclosed and claimed in the '399 patent. *See* Exhibit 1004 at 12:13-21. ("Referring now to FIG. **10**, a block diagram of a system **1000** including a SCM **908** interfacing with an untrusted PDA **1014** is shown. The SCM **908** may include Compact Flash (CF) interface **1012** for the host interface module. Untrusted application software and hardware may be implemented in the PDA **1014** while trusted applications are implemented in the SCM **908**. FIG. **11** illustrates a block diagram of a PDA computing environment **1100** utilizing the SCM shown in FIG. **10**.") (emphasis original).

It is plainly illogical to combine references to obtain unclaimed features, absent improper hindsight reconstruction to achieve the claimed invention. "To draw on hindsight knowledge of the patented invention, when the prior art does not contain or suggest that knowledge, is to use the invention as a template for its own reconstruction—an illogical and inappropriate process by which to determine patentability." *Sensonics Inc. v. Aerosonic Corp.*, 81 F.3d 1566, 1570 (Fed. Cir. 1996) (citing *W.L. Gore & Assoc. v. Garlock, Inc.*, 721 F.2d 1540, 1553 (Fed. Cir. 1983)). The "[d]etermination of obviousness cannot be based on the hindsight combination of components selectively culled from the prior art to fit the parameters of the patented invention." *ATD Corp. v. Lydall, Inc.*, 159 F.3d 534, 546 (Fed. Cir. 1998).

Nevertheless, that is exactly what the petitioner has done here. Accordingly, institution should be denied because Petitioner fails to establish a reasonable likelihood of unpatentability.

IV. CONCLUSION

The Board should exercise its discretion to deny the Petition under § 314(a) because the vast majority of *General Plastic* factors weigh against institution. This is the type of proceeding that the Board's precedential decision in *General Plastic* was developed to prevent. Moreover, petitioner has not established a reasonable likelihood of unpatentability under any ground or challenged claim because the only

motivation to combine the primary references is an unclaimed feature and the Petition is impermissibly relying on hindsight reconstruction.

V. MANDATORY NOTICES – Related Matters – 37 C.F.R. §42.8(b)(2)

The ’399 Patent is the subject of a second IPR Petition filed by Apple Inc. in IPR 2023-00543.

Respectfully submitted,

/Brett Cooper/

Brett Cooper, Reg. No. 55,085
BC Law Group, P.C.
200 Madison Avenue, 24th Floor
New York, NY 10016
(212) 951-0100

Date: June 13, 2023

CERTIFICATE OF WORD COUNT (37 C.F.R. § 42.24(d))

The undersigned hereby certifies that the word count in this Patent Owner Preliminary Response is 2,642 words, as counted by the word-processing program Microsoft Word that was used to generate this Patent Owner Preliminary Response, where such word count excludes the table of contents, table of authorities, mandatory notices, certificate of service, appendix of exhibits, claim listing, and this certificate of word count. This Patent Owner Preliminary Response is in compliance with the 14,000-word limit set forth in 37 C.F.R. § 42.24(b)(1).

Date: June 13, 2023

/Brett Cooper/

Brett Cooper, Reg. No. 55,085
BC Law Group, P.C.
200 Madison Avenue, 24th Floor
New York, NY 10016
(212) 951-0100

Counsel for Patent Owner

CERTIFICATE OF SERVICE (37 C.F.R. § 42.6(e))

The undersigned hereby certifies that the above document was served on June 13, 2023, by filing this document through the Patent Trial and Appeal Case Tracking System as well as delivering a copy via electronic mail upon the following attorneys of record for the Petitioner:

W. Karl Renner, Reg. No. 41,265
David Holt, Reg. No. 65,161
Gretchen A. DeVries, Reg. No. 72,505
Fish & Richardson P.C.
3200 RBC Plaza
60 South Sixth Street
Minneapolis, MN 55402
Tel: 612-335-5070
Fax: 612-288-9696

Email: IPR50095-0112IP1@fr.com

Date: June 13, 2023

/Brett Cooper/

Brett Cooper, Reg. No. 55,085
BC Law Group, P.C.
200 Madison Avenue, 24th Floor
New York, NY 10016
(212) 951-0100

Counsel for Patent Owner