UNITED STATES DISTRICT COURT
FOR THE WESTERN DISTRICT OF TEXAS
WACO DIVISION

SPEIR TECHNOLOGIES LTD., Plaintiff, v. APPLE INC., Defendant.	Case No. 6:22-cv-00077-ADA **JURY TRIAL DEMANDED**

PLAINTIFF SPEIR TECHNOLOGIES LTD.'S RESPONSIVE CLAIM CONSTRUCTION BRIEF

TABLE OF CONTENTS

I. INTRODUCTION 1

II. DISPUTED TERMS 1

A. U.S. Patent Nos. 7,110,779 ("the '779 Patent") and 7,321,777 ("the '777 Patent") 1

i. "known device latency," '779 Patent, Claim 18; '777 Patent Claims 1, 12, 20 1

B. U.S. Patent No. 7,765,399 ("the '399 Patent") 4

i. "human/machine interface", Claims 1, 2, 3, 4, 5, and 9 4

ii. "distinct", Claims 1, 7, and 9 8

1. No construction of "distinct" is necessary 8

2. The '399 Patent claims contradict Apple's construction 9

3. The specification and figures contradict Apple's construction 11

4. The prosecution history does not support Apple's construction 13

iii. "classified" / "unclassified", Claim 1, 7, and 9 14

1. The terms "classified" and "unclassified" are not subjective terms of degree 15

2. The terms "classified" and "unclassified" are easily understood in light of the intrinsic evidence 16

3. Apple's indefiniteness arguments are misguided 18

4. Apple's proposed construction should be rejected 19

iv. "The mobile PDA computer system according to claim 1", Claim 7 20

v. "physically secure enclosure", Claim 9 21

C. U.S. Patent No. 8,345,780 ("the '780 Patent") 22

i. "short term" / "long term", Claims 1, 9, and 12 22

1. The '780 Patent informs the scope of the invention with reasonable certainty 23

2. The prosecution history further informs the scope of the invention with reasonable certainty 26

ii. Apple's proposed alternative construction is wrong 27

iii. "self interference", Claims 1, 9, and 12 27

III. CONCLUSION 30

TABLE OF AUTHORITIES

Cases

AlexSam, Inc. v. Simon Prop. Grp. (Texas), L.P.,
No. 2:19-CV-331-RWS-RSP, 2022 WL 807434 (E.D. Tex. Mar. 16, 2022)..... 12

AlexSam, Inc. v. Simon Prop. Grp., L.P.,
No. 2:19-CV-331-RWS-RSP, 2021 WL 7709964 (E.D. Tex. Nov. 15, 2021) 12

Apple, Inc. v. Ameranth, Inc.,
842 F.3d 1229 (Fed. Cir. 2016) 8

Aristocrat Techs. Australia Pty Ltd. v. Int'l Game Tech.,
709 F.3d 1348 (Fed. Cir. 2013) 11

Bicon, Inc. v. Straumann Co.,
441 F.3d 945 (Fed. Cir. 2006) 2

CyWee Grp., Ltd. v. Huawei Device Co.,
No. 2:17-CV-00495-WCB-RSP, 2018 WL 6419484 (E.D. Tex. Dec. 6, 2018) 23

Energizer Holdings, Inc. v. Int'l Trade Comm'n,
435 F.3d 1366 (Fed. Cir. 2006) 20

Eolas Techs. Inc. v. Amazon.com, Inc.,
No. 6:15-CV-01038, 2016 WL 7155294 (E.D. Tex. Dec. 8, 2016) 19

Epos Techs Ltd. v. Pegasus Techs.,
766 F.3d 1338 (Fed. Cir. 2014) 11, 22

Exmark Mfg. Co. v. Briggs & Stratton Power Prods.,
879 F.3d 1332 (Fed. Cir. 2018) 25

Fractus, S.A. v. AT&T Mobility LLC,
No. 2:18-CV-00135-JRG, 2019 WL 1641357 (E.D. Tex. Apr. 16, 2019) 18

Guangdong Alison Hi-Tech Co. v. Int'l Trade Com'n,
936 F.3d 1353 (Fed. Cir. 2019) 25

Hill-Rom Servs., Inc. v. Stryker Corp.,
755 F.3d 1367 (Fed. Cir. 2014..... 1, 8, 19

Jack Guttman, Inc. v. Kopykake Enters., Inc.,
302 F.3d 1352 (Fed. Cir. 2002) 28

Microprocessor Enhancement Corp. v. Texas Instrus. Inc.,
520 F.3d 1367 (Fed. Cir. 2008) 20

Nautilus, Inc. v. Biosig Instrus., Inc.,
572 U.S. 898 (2014)..... 14, 23

Niazi Licensing Corp. v. St. Jude Med. S.C., Inc.,
30 F.4th 1339 (Fed. Cir. 2022) 23

One-E-Way, Inc. v. Int'l Trade Comm'n,
859 F.3d 1059 (Fed. Cir. 2017) 23

Ortho-McNeil Pharm., Inc. v. Caraco Pharm. Labs., Ltd.,
476 F.3d 1321 (Fed. Cir. 2007) 26

Phillips v. AWH Corp.,
415 F.3d 1303 (Fed. Cir. 2005) 9

Plantronics, Inc. v. Aliph, Inc.,
724 F.3d 1343 (Fed. Cir. 2013) 7

Prima Tek II, L.L.C. v. Polypap, S.A.R.L.,
318 F.3d 1143 (Fed. Cir. 2003) 5

RetailMeNot, Inc. v. Honey Sci. Corp.,
No. 18-937-CFC-MPT, 2019 WL 6337719 (D. Del. Nov. 27, 2019) 20, 21

Rodime PLC v. Seagate Tech., Inc.,
174 F.3d 1294 (Fed. Cir. 1999) 10

Ruckus Wireless, Inc. v. Innovative Wireless Sols., LLC,
824 F.3d 999 (Fed. Cir. 2016) 21, 27

Skedco, Inc. v. Strategic Operations, Inc.,
685 F. App'x 956 (Fed. Cir. 2017) 10

Sonix Tech. Co. v. Pubs. Int'l, Ltd.,
844 F.3d 1370 (Fed. Cir. 2017) 14, 18, 23

Thorner v. Sony Comput. Entm't Am. LLC,
669 F.3d 1362 (Fed. Cir. 2012) 1, 6, 10

Toshiba Corp. v. Imation Corp.,
681 F.3d 1358 (Fed. Cir. 2012) 4, 5, 22

Vitronics Corp. v. Conceptronic, Inc.,
90 F.3d 1576 (Fed. Cir. 1996) 28

Vstream Techs., LLC v. PLR Holdings, LLC,
No. 6:15-CV-974-JRG-JDL, 2016 WL 6159624 (E.D. Tex. Oct. 24, 2016) 16

Vstream Techs., LLC v. PLR Holdings, LLC,
No. 6:15CV974-JRG-JDL, 2016 WL 6211550 (E.D. Tex. Sept. 27, 2016)..... 16

Wright Med. Tech., Inc. v. Osteonics Corp.,
122 F.3d 1440 (Fed. Cir. 1997) 7

WSOU Invs., LLC v. F5 Networks, Inc.,
No. 2:20-CV-01878-BJR, 2022 WL 268825 (W.D. Wash. Jan. 28, 2022)..... 16

I. INTRODUCTION

Plaintiff Speir Technologies Ltd. ("Speir") submits this responsive claim construction brief in response to Defendant Apple Inc.'s Opening Claim Construction Brief (Dkt. No. 36, "Br.").

II. DISPUTED TERMS

A. U.S. Patent Nos. 7,110,779 ("the '779 Patent") and 7,321,777 ("the '777 Patent")

i. "known device latency," '779 Patent, Claim 18; '777 Patent Claims 1, 12, 20

Speir's Proposed Construction	Apple's Proposed Construction
No construction necessary[1]	"predetermined latency for the given device type of the target wireless communication device"

The term "known device latency" should be construed in light of its plain and ordinary meaning. Claim terms "are generally given their ordinary and customary meaning as understood by a person of ordinary skill in the art when read in the context of the specification and prosecution history." *Thorner v. Sony Comput. Entm't Am. LLC*, 669 F.3d 1362, 1365 (Fed. Cir. 2012). "There are only two exceptions to this general rule: 1) when a patentee sets out a definition and acts as his own lexicographer, or 2) when the patentee disavows the full scope of the claim term either in the specification or during prosecution." *Hill-Rom Servs., Inc. v. Stryker Corp.*, 755 F.3d 1367, 1371 (Fed. Cir. 2014) (citation omitted). Apple maintains that "known device latency" must be "predetermined." Br. at 3. But Apple does not point to any disclaimer or otherwise argue that the patentee acted as its own lexicographer in proposing its unduly narrow construction. Thus, the term's plain and ordinary meaning controls.

The teachings of the '779 and '777 Patent specifications undercut Apple's proposed

[1] For terms/phrases where Speir has indicated that no construction is necessary, Speir contends that either no construction is necessary or the term should be construed according to its plain and ordinary meaning.

construction. Specifically, the '779 and '777 Patents teach the following regarding the "known device latency":

> [T]he controller 42 will have access to the **known device latency** (i.e., a mean latency) for the given device type of the target device 34, **which provides a close approximation of the actual device latency t_{DL}**. **The known device latency could be a measured value based upon collected data**, it could be provided by manufacturers, or it could be based upon a value set in a communications standard, as discussed above, for example.

See '779 Patent at 7:12-19.[2] The specification is clear that the "known device latency" provides "a close approximation of the actual device latency." *See also id.*, 7:25-29 ("[A] close approximation of the total propagation delay (i.e., time t_{PD1}+time t_{PD2}) may therefore be obtained by substituting the known device latency for the actual device latency t_{DL}, and subtracting this value from the time between times t_1 and t_4."). The specification is also clear that the "known device latency" can "be a measured value based upon collected data." A "known device latency" that is "a measured value based upon collected data" is not "predetermined" (such as when the value is "provided by manufacturers"), as required by Apple's proposed construction. To that end, Apple's proposed construction excludes preferred embodiments and must be rejected. *See Bicon, Inc. v. Straumann Co.*, 441 F.3d 945, 951 (Fed. Cir. 2006) (rejecting construction that "would be contrary to the specification, which describes the features of the claimed abutment in detail … in the description of the preferred embodiments ….").

Apple is wrong that Speir seeks to construe "known device latency" as "actual device latency." Br. at 5. There is no dispute that the '779 and '777 Patents distinguish "known device latency" from "actual device latency." For context, the '779 and '777 Patents describe the "round trip" timing between the start of transmission of a location finding signal from the wireless device

[2] All emphasis added unless stated otherwise.

locator (WDL) to a target device and the complete reception at the WDL of the target device's reply. Figure 3 of the '779 and '777 Patents is illustrative:

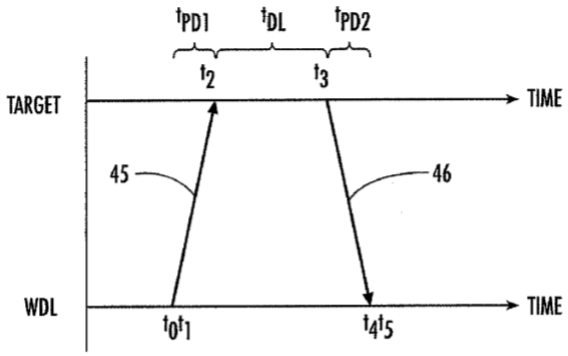

FIG. 3

'779 Patent, Fig. 3. The "round trip" timing includes the following transmission components: (1) the time it takes at the WDL "from the beginning of the location finding signal transmission (time t_0) to end thereof (time t_1)," *id.*, 6:53-54; (2) the propagation delay (t_{PD1}) from the WDL to the target "(i.e., from time t_1 to t_2)," *id.*, 6:60-62; (3) the propagation delay from the target back to the WDL (t_{PD2}) "(i.e., from time t_3 to t_4)," *id.*, 6:67 – 7:1; and (4) the reception time by the WDL "(i.e., from time t_4 to t_5)," *id.*, 7:2-3. The time from t_2 to t_3 is the "actual device latency" (t_{DL}), the time taken at the target device to "receive, process, and transmit a reply signal," *id.*, 6:62-66. The "actual device latency" "will likely vary somewhat from one transmission to the next for any wireless communications device, potentially by as little as a few nanoseconds to a few microseconds, depending upon device configurations, processing loads, etc." *Id.*, 7:20-25. In other words, the "actual device latency" will not always be consistent, or readily determined.

Instead of the "actual device latency," the '779 and '777 Patents provide for the "known device latency" to "provide[] a close approximation of the actual device latency." *Id.*, 7:13-15; *see also id.*, 7:25-29 ("[A] close approximation of the total propagation delay (i.e., time t_{PD1}+time t_{PD2}) may therefore be obtained by substituting the known device latency for the actual device

latency t_{DL} ….”). As noted above, the specification describes how the “known device latency” may be obtained: “The known device latency could be a measured value based upon collected data, it could be provided by manufacturers, or it could be based upon a value set in a communications standard, as discussed above, for example.” *Id.*, 7:15-19. These three sources for the “known device latency” are each exemplary, do not limit the “known device latency” to a predetermined value, and are distinguished from the “actual device latency.” There is no disavowal, either explicitly or implicitly, in the patents that would suggest that the “known device latency” cannot be actively determined, including from “a measured value based upon collected data.” *See Toshiba Corp. v. Imation Corp.*, 681 F.3d 1358, 1369 (Fed. Cir. 2012) (“Absent disclaimer or lexicography, the plain meaning of the claim controls.”). Because the ’779 and ’777 Patents clearly contemplate approximations of the “device latency” that are ***not*** predetermined, Apple’s construction should be rejected.

Apple’s proposed construction is also wrong because the ’779 and ’777 Patent specification does not use the term “predetermined” with respect to “known device latency.” This is notable because the specification uses “predetermined” in at least one other context, but does not use the term in connection with “known device latency.” *See* ’779 Patent at 1:35-40 (“[I]n one embodiment, … a plurality of locator signals may be sent from a locator at a standard repetition rate. The locator’s receiver then only listens for responses during predetermined windows following each transmission.”). Accordingly, Apple’s proposed construction is unjustified and the plain and ordinary meaning should govern.

B. U.S. Patent No. 7,765,399 (“the ’399 Patent”)

i. “human/machine interface”, Claims 1, 2, 3, 4, 5, and 9

Speir’s Proposed Construction	Apple’s Proposed Construction
No construction necessary	“an interface by which a user inputs information to, and receives information,

	from a device"

The parties agree that the plain and ordinary meaning applies to the term "human/machine interface" ("HMI"). Br. at 6. However, the parties disagree whether the secure and non-secure HMI must be a single "interface" that is capable of inputting and outputting information.[3] That is, Apple maintains that the secure/non-secure HMIs must each comprise a single component capable of *both* inputting and outputting information to a user. Apple's proposed construction is wrong—it imports extraneous limitations, excludes preferred embodiments, contradicts the intrinsic evidence, and is otherwise redundant of the surrounding claim language.

"Claim construction begins with the words of the claim." *Prima Tek II, L.L.C. v. Polypap, S.A.R.L.*, 318 F.3d 1143, 1148 (Fed. Cir. 2003). Independent claims 1, 9, and 12 all expressly require that the secure and non-secure HMI's "*enabl[e]* bi-directional communication" of information. *See* '399 Patent at Claims 1, 9, and 12. However, contrary to Apple's proposed construction, the claims do not require that the "bi-directional" communication of information utilize only a single "interface." "Absent disclaimer or lexicography, the plain meaning of the claim controls." *See Toshiba*, 681 F.3d at 1369. There is no definition or disavowal that justifies limiting the ordinary meaning of the term to Apple's narrow construction of a single HMI interface.

Apple's proposed construction is contradicted by Figures 4 and 5 of the '399 Patent and related disclosures. Both Figures 4 and 5 show that the secure and non-secure HMIs may comprise of several components for enabling "bi-directional" communication of information:

[3] Apple's suggestion that Speir accuses only "one half of a human/machine interface's claimed functionality" is wrong. Br. at 7. Apple mischaracterizes Speir's infringement contentions. As detailed in Speir's claim charts, Speir accuses functionality in the accused products that includes "bi-directional communication." *See, e.g.*, Ex. 1 ('399 Claim Chart) at 28-49.

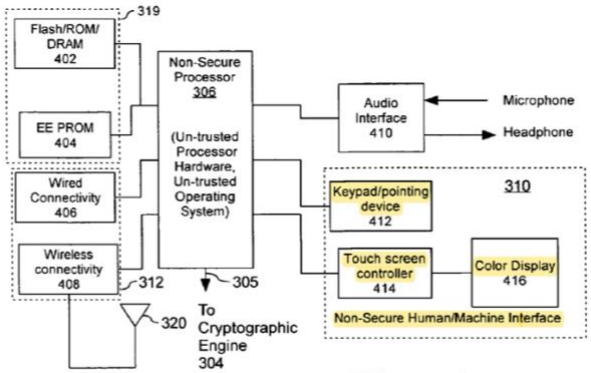

Fig. 4

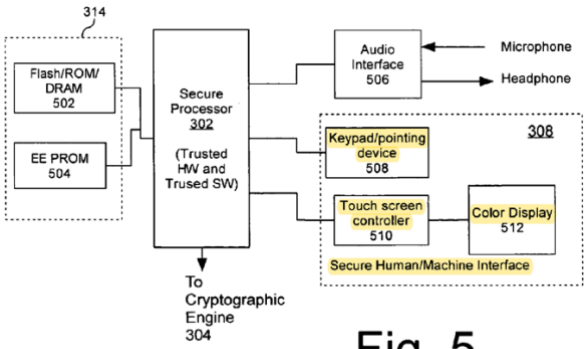

Fig. 5

For example, with respect to Figure 4, the '399 Patent specification teaches that "[n]on-secure HMI 310 can include a conventional color display 416 and touch screen controller 414…. [and] can also include a keypad/pointing device 412." '399 Patent at 6:44-47. Similarly, with respect to Figure 5 the '399 Patent teaches:

> Referring now to FIG. 5, it can be observed that **<u>the secure HMI 308 can be comprised of several components.</u>** For example, secure HMI 308 can include one or more input devices which allow a user to input control commands and input data. According to one embodiment, these input devices can include a pointing keypad/pointing device 508 and a touch screen controller 510. However, the invention is not limited in this regard. The secure HMI 308 can also include a display 512, which can present alphanumeric and graphical data. The display 512 can be a color or monochrome type display. Further, one or more data ports (not shown) can be provided as part of the human/machine interface.

'399 Patent at 7:62 – 8:13.

Based on the forgoing, the '399 Patent is clear that (1) the secure and non-secure HMIs may comprise of multiple components and (2) the component that inputs data may be *different* from the component that outputs data. That is, a user may use a "keypad" for inputting data and a "display" may be used to output data. Thus, Apple's proposed construction that the secure and non-secure HMI constitute a single interface is an extraneous limitation that is not supported by the teachings of the '399 Patent. *See Thorner*, 669 F.3d at 1366 ("We do not read limitations from the specification into claims; we do not redefine words."). Relatedly, Apple's proposed

construction excludes the preferred embodiments of Figures 4 and 5 and is therefore incorrect as a matter of law. *See, e.g., Plantronics, Inc. v. Aliph, Inc.*, 724 F.3d 1343, 1349-50 (Fed. Cir. 2013) (proposed construction "would improperly limit the broadly drafted claims to one preferred embodiment (thereby excluding others) or would be the result of improperly importing a limitation from the specification into the claims.").

Further, dependent claims 2, 3, 4, and 5 also undercut Apple's proposed construction. For example, dependent claim 2 recites that the secure HMI of claim 1 "comprises *at least one input device* to allow said user to control the secure user processor." '399 Patent, Claim 2. Dependent claim 3 (which depends on claims 1 and 2), recites that the secure HMI of claims 1 and 2 further "comprises *at least one output device* to allow the secure user processor to inform said user." *Id.*, Claim 3. Dependent claims 4 and 5 recite the same limitations regarding the use of at least one "input" and at least one "output" device for the non-secure HMI. *Id.*, Claims 4 and 5. The fact that these dependent claims contemplate the use of "*at least one*" "input" or "output" device for the secure and non-secure HMIs underscores that the HMIs recited in independent claim 1 are understood to cover (1) one or more interfaces and (2) the use of *separate* input and output devices for the HMIs. Thus, contrary to Apple's proposed construction, the term "human/machine interface" is not limited to a single interface of inputting and outputting information. *See Wright Med. Tech., Inc. v. Osteonics Corp.*, 122 F.3d 1440, 1445 (Fed. Cir. 1997) ("we must not interpret an independent claim in a way that is inconsistent with a claim which depends from it.").

Finally, Apple's proposed construction adds redundancy to the '399 Patent claims and is not helpful to the jury. As noted above, the '399 Patent claims already require that the secure and non-secure HMIs enable "bi-directional" communication of information. However, under Apple's proposal, the term "human machine interface" requires that a user "input" and "receive"

information, which adds redundancy to the claims and renders the "bi-directional communication" limitation superfluous. *See, e.g.*, *Apple, Inc. v. Ameranth, Inc.*, 842 F.3d 1229, 1238 (Fed. Cir. 2016) (rejecting proposed construction because "construing a claim term to include features of that term that are already recited in the claims would make those expressly recited features redundant."). Apple's proposed construction should be rejected.

ii. "distinct", Claims 1, 7, and 9

Speir's Proposed Construction	Apple's Proposed Construction
No construction necessary Plain and ordinary meaning	"physically separate"

Apple improperly seeks a construction of "distinct" in Claims 1 and 9 to require the secure HMI and non-secure HMI to be "physically separate"—a requirement that is expressly contradicted by the intrinsic record. Further, Apple requests that the Court also construe dependent Claim 7 to require the first and second "file system[s]" be "physically separate." But Claim 7 *already requires that* the two file systems be distinct "so as to provide physical separation," meaning Apple's proposed construction is redundant and renders that claim language superfluous. The Court should reject Apple's proposed construction because it is contradicted by the intrinsic record, imports extraneous limitations, and is unhelpful to the jury.

1. No construction of "distinct" is necessary

Courts "depart from the plain and ordinary meaning of claim terms based on the specification in only two instances: lexicography and disavowal." *Hill-Rom*, 755 F.3d at 1371. Apple cannot identify any definition or disavowal that justifies limiting the ordinary meaning of "distinct" to its unduly narrow construction—there is nothing in the intrinsic record that precludes the HMIs from sharing any physical components.

Further, the term "distinct" is a word that is readily understandable by the jury and does

not require construction. Contrary to Apple's proposal, the term "distinct" is not readily understood to require complete and total "physical separation" between two objects:

- "distinct": "distinguishable to the eye or mind as being discrete or not the same." Ex. 2 (Merriam-Webster Dictionary).
- "distinct": "distinguished as not being the same; not identical; separate" or "different in nature or quality; dissimilar." Ex. 3 (dictionary.com).

See also Phillips v. AWH Corp., 415 F.3d 1303, 1314 (Fed. Cir. 2005) ("the ordinary meaning of claim language … may be readily apparent even to lay judges, and claim construction in such cases involves little more than the application of the widely accepted meaning of commonly understood words…. In such circumstances, general purpose dictionaries may be helpful."). Indeed, Apple's own cited dictionary definitions further demonstrate that the term "distinct" does not require "physical separation":

- "distinct": "1. Readily distinguishable from all others…; 3. clearly defined…." Ex. 4 (The American Heritage Dictionary at -199); Ex. 5 (Webster's II New College Dictionary at -471) (same).
- "distinct": "1. Recognizably different in nature from something else of a similar type…." Ex. 6 (The Oxford American College Dictionary at -235).[4]

Because the term "distinct" is not readily understood to require total and complete "physical separation," there is no reason to depart from its plain and ordinary meaning.

2. The '399 Patent claims contradict Apple's construction

Claims 1 and 9 of the '399 Patent recite that the secure HMI is "distinct" from the non-

[4] While the Oxford American College Dictionary does include "physically separate" as a potential definition of "distinct," it is not the only definition provided which underscores that "distinct" can mean something less than "physical separate." *Id.*

secure HMI, but are otherwise silent as to whether the HMIs are required to otherwise be "physically separate." To that end, it is improper to limit the scope of Claims 1 and 9 to require complete and total physical separation of the secure and non-secure HMIs when the claims are otherwise silent. *See, e.g., Skedco, Inc. v. Strategic Operations, Inc.*, 685 F. App'x 956, 959 (Fed. Cir. 2017) ("nothing in the claims requires the pump and valve to be physically separated."); *Thorner*, 669 F.3d at 1367 ("The patentee is free to choose a broad term and expect to obtain the full scope of its plain and ordinary meaning ….").

Dependent Claims 7 and 18 make clear that the patentee knew how to write claims that require physical separation between certain claimed components and deliberately decided *not to* require that the secure and non-secure HMIs be "physically separate" in Claims 1 and 9. Specifically, Claim 7 provides:

> The mobile PDA computer system according to claim 1, further comprising a first file system exclusively accessible to said secure user processor for storing classified data and a second file system for storing unclassified data, said second file system ***distinct*** from said first file system ***so as to provide physical separation*** of said classified data from said unclassified data within said portable mobile computing device.

Dependent Claim 18 also requires that the first and second file systems be "distinct" in order to "provid[e] physical separation of [] classified data from [] unclassified data." If the patentee desired to require the secure and non-secure HMIs be "physically separate," the patentee could have written Claims 1 and 9 with that express requirement, as it did in Claims 7 and 18 with respect to the first and second file systems. *See Rodime PLC v. Seagate Tech., Inc.*, 174 F.3d 1294, 1305 (Fed. Cir. 1999) ("Had Rodime intended or desired to claim thermal compensation as a function of the positioning means in the asserted claims, it could have done it explicitly, as in claim 11.").

Additionally, because Claims 7 and 18 already require that the first and second file systems be "physical[ly] seprat[e]," a construction of "distinct" as "physically separate" merely adds

redundancy to Claims 7 and 18 and improperly renders the Claims' express requirement of physical separateness superfluous. *See, e.g., Aristocrat Techs. Australia Pty Ltd. v. Int'l Game Tech.*, 709 F.3d 1348, 1356-57 (Fed. Cir. 2013) (declining to adopt proposed construction because it would render another limitation "superfluous"). As such, Apple's proposed construction is unhelpful to the jury and should be rejected.

3. The specification and figures contradict Apple's construction

Apple's proposed construction is expressly contradicted by the '399 Patent specification and figures. Specifically, the '399 Patent contemplates that the secure HMI and non-secure HMI may share physical components, such as "power supply lines":

> According to one embodiment of the invention, the secure HMI 308 can be at least partially contained within a shielded enclosure. Moreover, the power supply lines for the secure HMI 308 can be filtered to ensure that signals associated with secure processor 302 are not communicated along the power supply lines back to the non-secure processor 306.

'399 Patent at 7:48-53. Certainly, if the non-secure and secure HMIs can share "power supply lines," then the HMIs are not "physically separate." To that end, Apple's proposed construction would improperly limit the claims to exclude preferred embodiments and must be rejected. *See, e.g., Epos Techs Ltd. v. Pegasus Techs.*, 766 F.3d 1338, 1347 (Fed. Cir. 2014) (a "claim construction that excludes a preferred embodiment … is rarely, if ever correct and would require highly persuasive evidentiary support.") (citation omitted).

Additionally, Figures 4 and 5 demonstrate that the secure and non-secure HMIs may comprise multiple "physical" components and do not preclude the possibility that any of these HMI components may be shared by the two HMIs or otherwise share physical components (such as "power supply lines"):

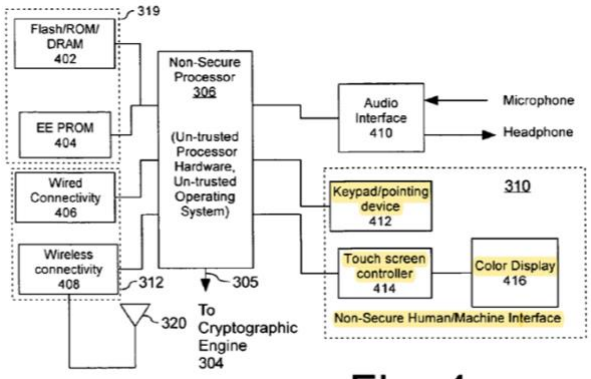

Fig. 4

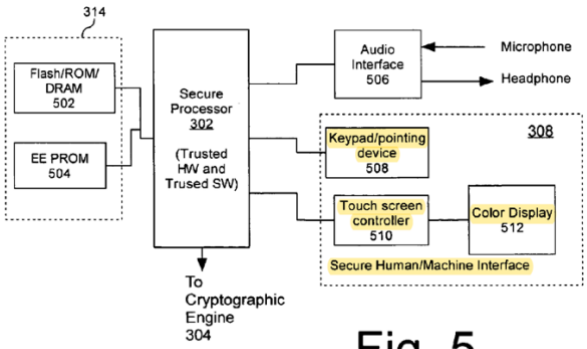

Fig. 5

Rather, Apple's proposed construction injects ambiguity and invites endless line-drawing exercises for purposes of determining how much "physical separateness" is required between the components of secure and non-secure HMIs. *See, e.g.*, *AlexSam, Inc. v. Simon Prop. Grp., L.P.*, No. 2:19-CV-331-RWS-RSP, 2021 WL 7709964, at *6 (E.D. Tex. Nov. 15, 2021), *report and recommendation adopted sub nom. AlexSam, Inc. v. Simon Prop. Grp. (Texas), L.P.*, No. 2:19-CV-331-RWS-RSP, 2022 WL 807434 (E.D. Tex. Mar. 16, 2022) ("There is simply no basis for AlexSam to artificially draw lines limiting the meaning and scope of the construction.").

Apple misdirects the Court by arguing that because the '399 Patent contemplates "physical separation of classified data from data which is unclassified," then somehow the non-secure HMI and secure HMI must also be "physically separate." Br. at 12. But it simply does not follow that because *data* may be kept in physically separate locations that the HMIs that allow for data input must be totally and completely *physically* separate. Rather, the '399 Patent explains that:

> Secure HMI devices … typically can include one or more features to ensure trusted communications between the user and the secure processor 302. The secure HMI 308 can provide a trusted path to applications executing on secure processor 302.

'399 Patent at 7:41-45. As such, the secure HMI need only "include *one or more features* to ensure trusted communications" between a user and the secure user processor and/or otherwise provide a "*trusted path*" to the secure processor. There is nothing in the '399 Patent that precludes the secure

HMI from utilizing software and/or other shared physical components to achieve these objectives. To the contrary, the '399 Patent expressly contemplates that the secure and non-secure HMIs can be implemented through a number of different possible configurations:

> HMI interfaces of the type described herein are well known in the art. In this regard it should be understood that the non-secure HMI interface is not limited to the specific embodiments shown. Instead, any other suitable non-secure HMI interface can be used for this purpose.
>
> * * *
>
> Secure HMI devices are known in the art …. Secure HMI features of this type are implemented in a variety of ways that are known to those skilled in the art.

'399 Patent at 6:47-52, 7:40-43, 7:60-61.[5] Simply put, the '399 Patent specification does not support Apple's argument that the secure and non-secure HMIs must be "physically separate" simply because *data* is ultimately stored in separate locations.[6]

4. The prosecution history does not support Apple's construction

Apple is also wrong that the "prosecution history unequivocally confirms that the claimed secure and non-secure HMIs are 'physically separate.'" Br. at 12. First, the fact that the applicant filed a terminal disclaimer in light of a *later filed*, co-pending application with a "shared" HMI hardly means that the '399 Patent's secure and non-secure HMIs must be completely "physically separate" in all respects. To the contrary, a review of that co-pending application—which issued as U.S. Patent No. 7,779,252 ("the '252 Patent")—makes clear that it is not "substantively identical to the '399 patent." Br. at 13. The '252 Patent claims recite a different invention, whereby the

[5] It is for this reason that Apple's repeated reliance on the architecture depicted in Figure 3 as somehow requiring physical separateness between the HMIs is unpersuasive. Br. at 11-12.

[6] Apple is also wrong that somehow because the '399 Patent contemplates the potential use of separate headsets for exchanging communications with the secure and non-secure user processors that means that the HMIs must be physically separate. Br. at 12. Apple does not explain why the '399 Patent's contemplated use of separate headphones for a direct communication link to the secure and non-secure user processors shows "physical separateness" between the two HMIs.

"shared" HMI "compris[es] a digital multiplexer *that is exclusively responsive to said cryptographic engine*…." Ex. 7 ('252 Patent) at Claims 1, 19. As such, the '252 Patent's "shared" HMI comprises a "digital multiplexer" and operates directly with the "cryptographic engine," which are requirements that are missing in the claims of the '399 Patent. The fundamentally different invention of the '252 Patent does not provide any basis for concluding that the secure and non-secure HMIs recited by the '399 Patent claims must be "physically distinct."

The applicant's amendments and statements in the prosecution history also do not support Apple's construction. Br. at 14. The amendments and applicant statements cited by Apple say nothing about whether the two HMIs require complete physical separateness—the applicant never remarked on the physical nature of the HMIs. *See* Ex. 8 (Nov. 10, 2009 Claim Amendments & Applicant Remarks); Ex. 9 (Apr. 28, 2010 Applicant Remarks).

For all of these reasons, the Court should reject Apple's proposed construction.

iii. "classified" / "unclassified", Claim 1, 7, and 9

Speir's Proposed Construction	Apple's Proposed Construction
No construction necessary Plain and ordinary meaning, *i.e.*, "information that [is / is not] of a sensitive nature"	Indefinite Alternatively: "information designated as [implicating / not implicating] matters of national security"

It is Apple's burden to prove indefiniteness by clear and convincing evidence, which it cannot do. *See Sonix Tech. Co. v. Pubs. Int'l, Ltd.*, 844 F.3d 1370, 1377 (Fed. Cir. 2017). A claim is not indefinite so long as it informs a POSITA about the scope of the invention with "reasonable certainty." *Nautilus, Inc. v. Biosig Instrus., Inc.*, 572 U.S. 898, 910 (2014). "Absolute precision" in claim language is "unattainable." *Id.*

The '399 Patent claims, specification, and prosecution history all teach the meaning of "classified" and "unclassified" with reasonable certainty. *See id.* at 908 ("[I]n assessing

definiteness, claims are to be read in light of the patent's specification and prosecution history."). As Apple acknowledges (Br. at 18), the '399 Patent uses the term "classified" synonymously with "sensitive"—"classified" information is that "of a sensitive nature" in the context of the '399 Patent. *See, e.g.*, '399 Patent at 9:2-8; *see also id.* at 6:63 – 7:2, 8:53-56, 9:13-14. To that end, the '399 Patent claims simply require a binary determination: either data is "sensitive" (*i.e.*, "classified") or it is not (*i.e.*, "unclassified"). Because a POSITA would understand that the claims require this simple binary determination, Claims 1, 7, and 9 of the '399 Patent are definite and no construction is necessary. Ex. 10 (Madisetti Decl.) ¶ 33.

1. The terms "classified" and "unclassified" are not subjective terms of degree

The '399 Patent provides more than sufficient support to inform a POSITA of the meanings of "classified" and "unclassified" with reasonable certainty. Claims 1 and 9 recite:

- "a secure human/machine interface configured for enabling bi-directional communication of <u>classified information</u> exclusively *between a user and said secure user processor*;" and
- "a non-secure human/machine interface distinct from said secure human/machine interface and configured for enabling bi-directional communication of <u>unclassified information</u> exclusively *between said user and said non-secure user processor*[.]"

'399 Patent, Claims 1, 9. Relatedly, dependent Claim 7 recites a "first file system exclusively accessible to said secure user processor for *storing* <u>*classified data*</u> and a second file system for *storing* <u>*unclassified data*</u>…." *Id.*, Claim 7.

The '399 Patent claims simply require a binary determination concerning information that is "classified" vs. "unclassified" for purposes of *which aspects of the claimed computing system will ultimately handle that information*. Madisetti Decl. ¶ 34. That is, "classified" information is handled by the secure HMI, secure user processor, and can be stored in a "first file system," while "unclassified" information is handled by the non-secure HMI, non-secure user processor, and can

be stored in a "second file system." *Id.* Courts have held that claim terms that require a binary determination are not "subjective" and are sufficiently definite. *See, e.g., WSOU Invs., LLC v. F5 Networks, Inc.*, No. 2:20-CV-01878-BJR, 2022 WL 268825, at *4 (W.D. Wash. Jan. 28, 2022) ("The Court [] agrees with Plaintiff that 'not fully connected,' as used in the specification, is better understood as a binary term referring to any port that is not completely connected to the network…. [T]he Court finds that the term is not indefinite."); *Vstream Techs., LLC v. PLR Holdings, LLC*, No. 6:15CV974-JRG-JDL, 2016 WL 6211550, at *9 (E.D. Tex. Sept. 27, 2016), *report and recommendation adopted*, No. 6:15-CV-974-JRG-JDL, 2016 WL 6159624 (E.D. Tex. Oct. 24, 2016) (holding term "implicates a binary determination: either the recommendation is accepted, or the recommendation is not accepted. The claim does not require a subjective determination…."). Because a binary determination is not "subjective," the Court should reject Apple's indefiniteness arguments.

2. The terms "classified" and "unclassified" are easily understood in light of the intrinsic evidence

The intrinsic evidence teaches the meaning of the terms "classified" / "unclassified" with reasonable certainty. Madisetti Decl. ¶ 35. Apple does not (as it cannot) dispute that the '399 Patent specification uses the term "classified" synonymously with "sensitive":

- "For example, the secure processor 302 can be housed inside a physical barrier that will detect any attempt to open the enclosure and automatically zeroize any stored **sensitive/classified information** contained within. The secure processor 302 can also be housed inside an enclosure that provides radio frequency (RF) shielding to guard against radiating **sensitive/classified information**." '399 Patent at 6:63 – 7:2.

- "For example, **any data of a sensitive nature** that is transferred from the secure processor to the cryptographic engine 304 must be encrypted before being transferred to the non-secure processor." *Id.* at 8:53-56.

- "**Any data of a sensitive nature** transferred from the secure processor to the non-secure processor can be encrypted by the cryptographic engine 304. An advantage of the foregoing architecture is that it (1) provides for physical separation of **classified**

data from data which is unclassified or encrypted/classified data, and (2) provides secure access to **sensitive files**." *Id.* at 9:2-8.

- "**Unclassified data** can be transmitted using conventional wired connectivity 406 or wireless connectivity 408. Significantly, however, **data that is of a sensitive nature can also be transmitted**." *Id.* at 9:9-14.

Id.; *see also* Br. at 18 (noting the '399 Patent "repeatedly equat[es] 'classified' information with 'any data of a sensitive nature."). In other words, the '399 Patent specification is consistent in teaching that "classified" information refers to information "of a sensitive nature" and "unclassified" information is not "of a sensitive nature." Madisetti Decl. ¶ 34.

The '399 Patent also provides concrete examples of types of information that may qualify as "classified" / "sensitive." For example, the '399 Patent explains that information designated as "Confidential, Secret, or Top Secret" (such as information that "relates to matters of national security") are not suitable for use by the non-secure user processor. *See* '399 Patent at 1:46-50. Additionally, the '399 Patent also explains that "encryption keys" are an example of classified data.[7] *Id.* at 2:1-4. These examples further illuminate that the terms "classified" / "unclassified" are readily understood in the context of the '399 Patent. Madisetti Decl. ¶¶ 36, 37.

Additionally, the prosecution history further confirms this understanding. Madisetti Decl. ¶ 38. Indeed, Apple admits that "[d]uring prosecution, applicant again, repeatedly, analogized 'classified' to sensitive'…." Br. at 18-19. For example, in distinguishing the prior art, the applicant explained that "the portable mobile computing device of amended claims 5, 11 advantageously provides secure access to *sensitive files* via a secure human/machine interface and a secure user processor." Ex. 8 (Nov. 10, 2009 Applicant Remarks) at 11. The prosecution history

[7] Apple's attempt to explain away the '399 Patent's teaching of "encryption keys" as an example of "classified" information is unpersuasive. Br. at 18 n.2. Apple acknowledges that cryptography typically "relies on a *pair* of encryption keys," only *one of which* is publicly known—meaning the *other* key is kept "classified."

also re-iterates the '399 Patent's example of "sensitive information" may concern "national security related applications." Ex. 9 (Apr. 28, 2010 Applicant Remarks).

In light of the forgoing, a POSITA would understand the scope of the '399 Patent claims with reasonable certainty and no construction is necessary. To the extent the Court believes that clarifying the plain and ordinary meaning of the terms will be helpful to the jury, the Court should hold that "classified" / "unclassified" is "information that [is / is not] of a sensitive nature."

3. Apple's indefiniteness arguments are misguided

Apple is wrong that Claims 1, 7, and 9 are indefinite because "the claims require determining whether information is or is not 'classified'—an inherently subjective evaluation…." Br. at 16. The binary determination of whether information is or is not "classified" is hardly like *Interval Licensing* and *Datamize*, which "involved terms that were subjective in the sense that they turned on a person's tastes or opinion." *Sonix Tech. Co.*, 844 F.3d at 1378.

In the context of the '399 Patent, if two users disagree on whether certain information is "classified," *the scope of the claimed invention is unaffected*—the claimed inventions are still bound to a computing system that provides a user with the capability to input, store, encrypt, and/or communicate information that is "confidential" / "sensitive" separately from information that is <u>not</u> "confidential" / "sensitive" in nature. Madisetti Decl. ¶ 39. The only difference concerning the chosen category of information is *which part* of the computing system is impacted—*i.e.*, the secure-side or non-secure side of the system. *Id.* But that issue depends on how the inventions are implemented and is factual in nature. *Id.*; *see also Fractus, S.A. v. AT&T Mobility LLC*, No. 2:18-CV-00135-JRG, 2019 WL 1641357, at *24 (E.D. Tex. Apr. 16, 2019) ("Defendants have not shown … that the possibility of different frequency bands being defined in different ways or with different bandwidths gives rise to any lack of reasonable certainty as to the meaning of the present disputed terms. Instead, these are implementation-specific details."). As such, whether certain

information qualifies as "confidential"/ "sensitive" is really an issue of how the inventions are implemented and *not* about the scope of the claimed computing system. *See, e.g.*, *Eolas Techs. Inc. v. Amazon.com, Inc.*, No. 6:15-CV-01038, 2016 WL 7155294, at *6 (E.D. Tex. Dec. 8, 2016) ("Defendants have failed to demonstrate that 'interactive' is a term of degree that renders the claim scope subjective. Instead, whether an application is 'interactive' depends upon the details of a particular implementation and is a factual question regarding infringement rather than a legal question for claim construction.").

4. Apple's proposed construction should be rejected

Apple's proposal for an alternative construction of "classified" / "unclassified" underscores that the disputed '399 Patent claims are sufficiently definite. Apple bases its proposed construction on the '399 Patent's suggestion that "Confidential, Secret, or Top Secret" information that "relates to matters of national security" may qualify as "classified." Br. at 19 n.3 (citing '399 Patent, 1:49-50.). Apple maintains that its proposed construction "is not subjective" and "comports with the intrinsic evidence." *Id.* But Apple cannot have it both ways—it cannot argue that the '399 Patent claims are indefinite while also acknowledging that '399 Patent provides concrete examples of "classified" information that can serve as the basis of a claim construction.

In any event, Apple's proposed construction is unduly narrow by limiting the scope of the term "classified" to only include "information designated as [implicating / not implicating] matters of national security." Br. at 19 n.3. Apple does not argue that the patentee acted as its own lexicographer nor identify any specific disavowal that would support its narrow construction. *See Hill-Rom*, 755 F.3d at 1371. And, in light of other disclosures in the '399 Patent—such as the example that "encryption keys" may be "classified"—it is clear that Apple's proposed construction is too narrow. Madisetti Decl. ¶ 40. Rather, as explained above, to the extent any clarification of the plain and ordinary meaning is required, the terms should be construed consistent with the '399

Patent's teachings to mean "information that [is / is not] of a sensitive nature."

iv. "The mobile PDA computer system according to claim 1", Claim 7

Speir's Proposed Construction	Apple's Proposed Construction
No construction necessary	Indefinite

Apple argues that Claim 7 is indefinite because there is no explicit antecedent basis for the term "mobile PDA computer system." Br. at 20. "The party alleging indefiniteness based on a lack of antecedent basis has the burden to prove by clear and convincing evidence that the lack of antecedent basis leaves one of ordinary skill in the art unable to discern the boundaries of the claim based on the claim language, the specification, the prosecution history, and the knowledge in the relevant art." *RetailMeNot, Inc. v. Honey Sci. Corp.*, No. 18-937-CFC-MPT, 2019 WL 6337719, at *19 (D. Del. Nov. 27, 2019) (citation omitted). Apple cannot meet its burden because Claim 7's implied antecedent basis to "[t]he computer system according to claim 1" is readily apparent in light of the claims and prosecution history.

It is a "well-settled rule that claims are not necessarily invalid for a lack of antecedent basis." *Microprocessor Enhancement Corp. v. Texas Instrus. Inc.*, 520 F.3d 1367, 1376 (Fed. Cir. 2008). Whether a claim is indefinite for "lack of explicit antecedent basis … must be decided in context" and "an antecedent basis can be present by implication." *Energizer Holdings, Inc. v. Int'l Trade Comm'n*, 435 F.3d 1366, 1370-71 (Fed. Cir. 2006). In light of the other dependent Claims 2-6 which each refer back to "[t]he computer system," it is readily apparent that Claim 7 is also intended to refer back to "[t]he computer system according to claim 1." Thus, the claim is not indefinite because the antecedent basis is present by implication.

The prosecution history further confirms that Claim 7 is intended to refer back to "[t]he computer system according to claim 1." Original Claim 1 recited "[a] mobile PDA computer system." Ex. 11 (Feb. 22, 2006 Claims). On November 10, 2009, the Applicant amended Claim

1 and dependent Claims 2-10 to delete the term "mobile PDA." Ex. 8 (Nov. 10, 2009 Amendments). At the same time, the Applicant added new Claim 24 (which was issued as the disputed Claim 7). *Id*. at 6-7. However, the Applicant failed to delete the term "mobile PDA" in this new Claim 24. On February 2, 2010, the Examiner rejected Claim 24 for insufficient antecedent basis for reciting the term "mobile PDA." On April 28, 2010, the Applicant amended Claim 24 "so as to overcome the Examiner's rejection thereto" with respect to the lack of antecedent basis for the phrase "mobile PDA." Ex. 9 (Apr. 28, 2010 Applicant Remarks). The Applicant removed one reference to "mobile PDA" in Claim 24, but inadvertently failed to delete the term "mobile PDA" from the beginning of the claim. Thus, the prosecution history confirms that the term "mobile PDA" was intended to have been deleted from the claim. In light of the prosecution history, it is readily apparent that Claim 7 refers back to "[t]he computer system of claim 1." *See RetailMeNot*, 2019 WL 6337719, at *20 (rejecting indefiniteness challenge based on argument that "[a]n antecedent basis can be implied where a typographical error during prosecution removed explicit antecedent basis, but it is nonetheless clear to what the element refers.").

To the extent the Court finds the claim language ambiguous, Claim 7 should be construed consistent with the other dependent claims and prosecution history to preserve its validity—namely, the disputed phrase should be construed to mean "[t]he computer system according to claim 1." *See Ruckus Wireless, Inc. v. Innovative Wireless Sols., LLC*, 824 F.3d 999, 1004 (Fed. Cir. 2016) ("If, after applying all other available tools of claim construction, a claim is ambiguous, it should be construed to preserve its validity."). The intrinsic evidence confirms that this construction is correct.

v. "physically secure enclosure", Claim 9

Speir's Proposed Construction	Apple's Proposed Construction

No construction necessary Plain and ordinary meaning	"an enclosure that detects physical tampering, intrusion, or unauthorized access"

Apple improperly seeks to import a limitation that is contrary to the ordinary meaning. Br. at 23. But Apple cannot identify any definition or disavowal that justifies limiting the ordinary meaning of the term to Apple's unduly narrow construction. *See Toshiba*, 681 F.3d at 1369.

Apple's construction is contrary to the intrinsic evidence. For example, the specification describes an embodiment "that provides radio frequency (RF) shielding to guard against radiating sensitive/classified information." '399 Patent at 7:1-2. In fact, Apple cites this embodiment in its brief. Br. at 24 (citing '399 Patent at 7:45-50 ("According to one embodiment of the invention, the secure HMI 308 can be at least partially contained within a shielded enclosure."). Yet Apple's construction would improperly exclude this preferred embodiment. *See Epos Techs.*, 766 F.3d at 1347 (a "claim construction that excludes a preferred embodiment…is rarely, if ever correct and would require highly persuasive evidentiary support.") (citation omitted). To the extent the Court deems construction necessary, it should at a minimum include this embodiment (i.e., "an enclosure that detects physical tampering, intrusion, or unauthorized access, ***or an enclosure that provides radio frequency (RF) shielding***"). Apple's construction is contrary to the specification and should be rejected.[8]

C. U.S. Patent No. 8,345,780 ("the '780 Patent")

i. "short term" / "long term", Claims 1, 9, and 12

Speir's Proposed Construction	Apple's Proposed Construction
No construction necessary Plain and ordinary meaning	Indefinite Alternatively: "short term": "on the order of

[8] Apple's suggestion that Speir contends the scope of this term includes a mere "removable cover of a mobile device" is wrong. Br. at 23. Speir contends that the Accused Products for the '399 Patent satisfy the limitation "at least a portion of said secure human/machine interface located in a physically secure enclosure" based on their overall design and security features.

	seconds"; "long term": "on the order of weeks, or greater"

It is Apple's burden to prove indefiniteness by clear and convincing evidence, which it cannot do. *See Sonix Tech.*, 844 F.3d at 1377. A claim is not indefinite so long as it informs a POSITA about the scope of the invention with "reasonable certainty." *Nautilus*, 572 U.S. at 910. "Absolute precision" in claim language is "unattainable," *id.*, and "relative terms and words of degree do not render patent claims invalid." *One-E-Way, Inc. v. Int'l Trade Comm'n*, 859 F.3d 1059, 1063 (Fed. Cir. 2017). Rather, "patent claims with descriptive words or terms of degree 'must provide objective boundaries for those of skill in the art' in the context of the invention to be definite." *Niazi Licensing Corp. v. St. Jude Med. S.C., Inc.*, 30 F.4th 1339, 1349 (Fed. Cir. 2022). Further, "[m]erely because a claim is drafted broadly and could cover a variety of methods does not automatically render a claim indefinite." *CyWee Grp., Ltd. v. Huawei Device Co.*, No. 2:17-CV-00495-WCB-RSP, 2018 WL 6419484, at *15 (E.D. Tex. Dec. 6, 2018); *see also Niazi*, 30 F.4th at 1347 ("But a claim is not indefinite just because it is broad.").

The '780 Patent claims, specification, and prosecution history teach the meaning of the terms "short term" and "long term" with reasonable certainty. *See* Madisetti Decl. ¶¶ 46-73; *Nautilus*, 572 U.S. at 908. Here, the '780 Patent provides objective criteria for determining how the "short term" and "long term" historical characteristics of interference are used—namely, that they allow the wireless system to "determine the cause of the degradation in link performance, i.e. is it a short term fade or truly interference." '780 Patent at 4:38-40; Madisetti Decl. ¶¶ 46-49. Because a POSITA would understand the meaning of the claims with reasonable certainty, Claims 1, 9, and 12 are definite and should be construed in light of their plain and ordinary meaning.

1. The '780 Patent informs the scope of the invention with reasonable certainty

The '780 Patent provides more than sufficient support to inform a POSITA with reasonable

certainty for determining how the "short term" and "long term" historical characteristics of interference are used. Madisetti Decl. ¶¶ 47-50. For example, the '780 Patent explains the following:

> Referring briefly and additionally to FIG. 3, a diagram 50 shows the first controller 22 detecting the interference 28 a-28 c by at least performing interference parameter estimation. This includes monitoring 51 bit-error rate (BER), signal-to-noise and distortion ratio, and packet retransmission characteristics. **These parameters are monitored and compared with history 52 of received signals. The history is broken into short term (seconds) 53, medium term (hours/days) 54, and long term (weeks/months) 55 statistics. The comparison of link performance parameters with historical data allows the algorithm to advantageously <u>determine the cause of the degradation in link performance, i.e. is it a short term fade or truly interference</u>**.

'780 Patent at 4:28-40. According to this embodiment, various link performance parameters are monitored and compared with a history of received signals. The history is broken into "short term," "medium term," and "long term" statistics. The wireless system compares the link performance parameters with the historical data in order to "determine the cause of the degradation in link performance, i.e. is it a short term fade or truly interference." *Id*.

A POSITA would understand the meaning of the claims in light of these teachings in the specification. Madisetti Decl. ¶ 50. In particular, a POSITA would understand that wireless communication systems may have different objectives and designs. *Id*. For example, a wireless system may be fixed (e.g., WiFi) or mobile (e.g., 4G LTE) systems. *Id*. Mobile wireless systems have to contend with significant Doppler shifts compared to fixed wireless and thus the communications and interference environment will change much more rapidly in a mobile system compared to a fixed system. *Id*. Accordingly, the precise values of the relevant historical characteristics of interference will depend on the type and configuration of the wireless system at issue. *Id*. In addition, the relative division of the "short term" and "long term" historical characteristics will depend on the type and configuration of the wireless system at issue. *Id*. ¶¶

50-51. This is confirmed by Figure 3 which describes box 53 "SHORT TERM" as "FAST AND HEAVY FLUCTUATIONS OF THE PACKET ARRIVAL RATE." A POSITA would understand that the time interval over which the packet arrival rate can change is a function of the system design. *Id.* ¶¶ 51-60. Thus, by extension so is the relative division of the "short term" and "long term" historical characteristics. *Id.* Regardless, however, of the type and configuration of the wireless system, a POSITA would understand that the classification of the "short term" and "long term" characteristics will allow the system to determine the cause of the degradation in link performance. *Id.* As such, the specification provides objective criteria with respect to these terms.

Apple's argument that the specification does not define the precise numerical boundaries for each of "short term" and "long term" is not persuasive and contrary to Federal Circuit precedent. Br. at 26. Because the precise values of the "short term" characteristics (e.g., 0.1 seconds vs. 1.0 seconds) are understood in the context of the parameters of the wireless communication system at issue, a POSITA would not need or expect the claims or '780 patent to define the terms "short term" and "long term" with numerical precision. *See Guangdong Alison Hi-Tech Co. v. Int'l Trade Com'n*, 936 F.3d 1353, 1362 (Fed. Cir. 2019) ("Alison seeks a level of numerical precision beyond that required when using a term of degree."); *Exmark Mfg. Co. v. Briggs & Stratton Power Prods.*, 879 F.3d 1332, 1346 (Fed. Cir. 2018) ("Though Briggs seeks to impose a strict requirement of how straight the baffle portions must be, no such numerical precision is required when using such terms of degree."). Rather, a POSITA would understand the relative boundary between "short term" and "long term" in the context of the particular wireless communication system and configuration at issue. Madisetti Decl. ¶¶ 47-60. The relative boundary between the types of historical characteristics would necessarily depend on the configuration of the system and the most prevalent forms of interference. *Id.*; *see also Ortho-*

McNeil Pharm., Inc. v. Caraco Pharm. Labs., Ltd., 476 F.3d 1321, 1326-27 (Fed. Cir. 2007) (consider a claim term in light of "technological facts of the particular case.") (citation omitted).

2. The prosecution history further informs the scope of the invention with reasonable certainty

The Applicant also explained the scope of the claims during prosecution of the '780 Patent. Madisetti Decl. ¶ 48. Specifically, the Applicant amended the claims to add the requirement that the determination of the interference is "based upon comparing at least one characteristic of a current received signal with the short term and long term historical characteristics of interference." Dkt. 36-14 at 2. In the Remarks, the Applicant clarified that:

> Applicants have amended each of the independent claims to recite determining a type of the received interference from among a plurality of interference types comprising wideband interference, self interference, and narrowband interference <u>based upon comparing at least one characteristic of a current received signal with the short term and long term historical characteristics of interference</u>. Applicants submit that none of the applied prior art references discloses or fairly suggests this claim feature. Differently, Ababa et al. discloses storing "interference patterns" so as to recognize a current interfering source. **As discussed in the present application, this above underlined claim feature permits advantageous determination of the cause of the degradation in link performance, i.e. permitting the first controller to determine, for example, whether the degradation is the result of short term fade or true interference**, and also determining the type of the received interference from among a plurality of interference types, as recited in amended independent Claim 1.

Dkt. 36-14 (July 25, 2012 Applicant Remarks) at 11-12. Consistent with the explanation in the specification, the prosecution history confirms that the wireless system compares the characteristic of the current received signal with the historical characteristics in order to determine "the cause of the degradation in link performance, i.e. permitting the first controller to determine, for example, whether the degradation is the result of short term fade or true interference." *Id.* While Apple notes that the claims were amended to add the phrase "short term and long term historical characteristics" to overcome a prior art rejection, Apple ignores this relevant explanation in the prosecution history. Br. at 26. Thus, the '780 Patent specification and prosecution history provide

sufficient detail to inform a POSITA about the meaning of the terms "short term" and "long term."

ii. Apple's proposed alternative construction is wrong

Apple's proposed alternative construction is contrary to the intrinsic evidence. Br. at 27. Apple improperly seeks to limit "short term" to "on the order of seconds" and "long term" to "on the order of weeks, or greater" based on one exemplary embodiment in the specification. But the specification does not, and need not, limit the terms to such precise numerical values. As discussed above, the relative boundary between the types of historical characteristics would necessarily depend on the configuration of the system and the most prevalent forms of interference. Consequently, a POSITA would not need or expect the terms to be defined in order to understand the scope of the claims with reasonable certainty. Madisetti Decl. ¶¶ 61-72. Rather, the specification and prosecution history confirm that the only requirement is that they allow the wireless system to "determine the cause of the degradation in link performance, i.e. is it a short term fade or truly interference." '780 Patent at 4:38-40; Madisetti Decl. ¶ 49.

For all of these reasons, the Court should reject Apple's invalidity argument and proposed alternative construction.[9]

iii. "self interference", Claims 1, 9, and 12

Speir's Proposed Construction	Apple's Proposed Construction
"interference caused by two wireless communication systems being deployed too closely together or by two wireless communication systems using the same frequency band/channel"	"interference caused by the wireless communication device itself or by two wireless communication systems being deployed too closely together or by two wireless communication systems using the same frequency band/channel"

[9] To the extent the Court finds the claim language ambiguous, it should be construed consistent with the specification to preserve its validity—namely, that the "short term" and "long term" historical characteristics allow the wireless system to determine the cause of the degradation in link performance, i.e., is it a short term fade or truly interference. *See Ruckus Wireless*, 824 F.3d at 1004 ("If, after applying all other available tools of claim construction, a claim is ambiguous, it should be construed to preserve its validity.").

The parties dispute whether the term encompasses "interference caused by the wireless communication device itself." The specification makes clear what is meant by the term "self interference" in the context of the '780 Patent and never suggests that the term includes "interference caused by the wireless communication device itself." Nor does anything in the prosecution history suggest the term should include this meaning. Apple's attempt to alter the meaning set forth in the specification with an alternative meaning based on its expert declaration is improper. *See Vitronics Corp. v. Conceptronic, Inc.*, 90 F.3d 1576, 1583 (Fed. Cir. 1996) ("In most situations, an analysis of the intrinsic evidence alone will resolve any ambiguity in a disputed claim term. In such circumstances, it is improper to rely on extrinsic evidence."). In short, Apple cannot identify any intrinsic evidence that supports its construction, which is directly contradicted by the explanation of the term set forth in the specification.

The parties agree that the term should be construed based on this express description in the specification. *See, e.g.*, *Jack Guttman, Inc. v. Kopykake Enters., Inc.*, 302 F.3d 1352, 1360 (Fed. Cir. 2002) ("It is black letter law that a patentee can 'choose to be his or her own lexicographer by clearly setting forth an explicit definition for a claim term that could differ in scope from that which would be afforded by its ordinary meaning.'") (citation omitted). Here, the '780 Patent specification provides a clear explanation of the meaning of the term "self interference":

> Another common type of interference is self interference. **Common causes of self interference may include, for example, collocation or frequency reuse. In particular, collocation may be caused by two wireless communication systems being deployed too closely together while frequency reuse may be caused by two wireless communication systems using the same frequency band/channel**. Several approaches to compensating for self interference, which are available during planning and development stages of wireless communication systems, include, for example, installation (isolation between antennas), frequency planning, antenna pattern manipulation, synchronization of transmitters, and filtering (duplexing).

'780 Patent at 1:41-53; Madisetti Decl. ¶¶ 77-80. As explained by the specification, "self

interference" is caused by collocation or frequency reuse. *Id*. The specification makes clear that each of these results from interference caused by another "communication system"—not a single device itself. *Id*. Specifically, collocation is caused by two wireless communication systems being deployed too closely together. *Id*. And frequency reuse is caused by two wireless communication systems using the same frequency band/channel. *Id*. A POSITA would understand that this interference is "self interference" because it is "self-inflicted" by the design and layout of the wireless communication ***system*** itself. *Id*. Critically, however, nothing about collocation or frequency reuse relates to "interference caused by the wireless communication ***device*** itself." *Id*.

Apple is wrong that the prosecution history supports its construction. Nothing in the prosecution history suggests that the term "self-interference" includes "interference caused by the wireless communication device itself." The only passage cited by Apple states as follows:

> Indeed, the interference mitigation technique disclosed by Ababa et al. may differentiate between narrowband and wideband interference, but it does not determine **whether such interference is self-inflicted, i.e. self-interference, as in the claimed invention**.

Dkt. 36-19 at 9-10. In light of the explanation in the specification, a POSITA would understand this statement to refer to the "self-inflicted" interference caused by collocation and frequency reuse caused by another "communication ***system***"—not a single device itself. Madisetti Decl. ¶¶ 81-87. As explained in the specification, interference caused by collocation and frequency reuse is "self-inflicted" by the design and layout of the wireless communication system. *Id*. Indeed, this is confirmed by the fact that the only remedies the specification describes for compensating for self interference are changes to the ***system*** design such as during installation by providing isolation between antennas, frequency planning, antenna pattern manipulation, synchronization of transmitters and filtering (duplexing). *Id*. None of these actions would have any impact on any interference caused by the ***device*** itself. *Id*.

Neither the specification nor prosecution history says anything about "interference caused by the wireless communication device itself." *Id*. If the patentee had intended the scope of the claims to include such a concept, it would have included this in its explanation and provided examples of how to remedy it. *Id*. The express omission of any such meaning confirms to a POSITA that the term does not include Apple's unsupported concept. *Id*.

For all these reasons, Apple's attempt to use extrinsic evidence to alter the meaning of the term set forth in the specification should be rejected.

III. CONCLUSION

For the foregoing reasons, Speir respectfully requests that the Court adopt its proposed construction for each of the disputed claim terms.

Dated: August 23, 2022

Respectfully submitted,

/s/ Brett E. Cooper

Reza Mirzaie (CA SBN 246953)
rmirzaie@raklaw.com
Marc A. Fenster (CA SBN 181067)
mfenster@raklaw.com
Brett E. Cooper (NY SBN SBN 4011011)
bcooper@raklaw.com
Seth Hasenour (TX SBN 24059910)
shasenour@raklaw.com
Drew B. Hollander (NY SBN 5378096)
dhollander@raklaw.com

RUSS AUGUST & KABAT
12424 Wilshire Blvd. 12th Floor
Los Angeles, CA 90025
Phone: (310) 826-7474
Facsimile: (310) 826-6991

Attorneys for Plaintiff Speir Technologies Limited

CERTIFICATE OF SERVICE

I hereby certify that the counsel of record who are deemed to have consented to electronic service are being served on August 23, 2022 with a copy of this document via the Court's ECF system.

/s/ Brett E. Cooper
Brett E. Cooper