The most comprehensive resource available for the electrical PE exam

Electrical Engineering Reference Manual

for the Electrical and Computer PE Exam

Sixth Edition

John A. Camara, PE

Professional Publications, Inc.
The #1 Choice of Over 800,000 Engineers
Engineering Review Series

HALLIBURTON EXHIBIT 1019
Halliburton Energy Services, Inc. v. U.S. Well Services, LLC, IPR2023-00557, Page 1

Electrical Engineering Reference Manual

for the Electrical and Computer PE Exam

Sixth Edition

John A. Camara, PE

Professional Publications, Inc. • Belmont, CA

HALLIBURTON EXHIBIT 1019
Halliburton Energy Services, Inc. v. U.S. Well Services, LLC, IPR2023-00557, Page 2

How to Locate Errata and Other Updates for This Book

At Professional Publications, we do our best to bring you error-free books. But when errors do occur, we want to make sure that you know about them so they cause as little confusion as possible.

A current list of known errata and other updates for this book is available on the PPI website at **www.ppi2pass.com**. From the website home page, click on "Errata." We update the errata page as often as necessary, so check in regularly. You will also find instructions for submitting suspected errata. We are grateful to every reader who takes the time to help us improve the quality of our books by pointing out an error.

ELECTRICAL ENGINEERING REFERENCE MANUAL
Sixth Edition

Current printing of this edition: 4

Printing History

edition number	printing number	update
6	2	Minor corrections.
6	3	Minor corrections.
6	4	Minor corrections.

Copyright © 2002 by Professional Publications, Inc. All rights reserved. No part of this publication may be reproduced, stored in a retrieval system, or transmitted, in any form or by any means, electronic, mechanical, photocopying, recording, or otherwise, without the prior written permission of the publisher.

Printed in the United States of America

Professional Publications, Inc.
1250 Fifth Avenue, Belmont, CA 94002
(650) 593-9119
www.ppi2pass.com

Library of Congress Cataloging-in-Publication Data
Camara, John A., 1956-
Electrical engineering reference manual for the electrical and computer PE exam / John A. Camara.--6th ed.
p. cm.
Fifth ed. published under title: Electrical engineering reference manual for the PE exam / Raymond B. Yarbrough.
Includes index.
ISBN 1-888577-56-8
1. Electric engineering--Examinations, questions, etc. 2. Electric engineering--United States--Examinations--Study guides. I. Yarbrough, Raymond B. Electrical engineering reference manual for the PE exam. II. Title.

TK169.Y37 2001
621.3′076--dc21

2001048442

Table of Contents

Appendices Table of Contents vii

Preface to the Sixth Edition ix

Acknowledgments for the Sixth Edition xi

Codes, Handbooks, and References xiii

Introduction xv

Topic I: Mathematics

Systems of Units 1-1
Energy, Work, and Power 2-1
Engineering Drawing Practice 3-1
Algebra 4-1
Linear Algebra 5-1
Vectors 6-1
Trigonometry 7-1
Analytic Geometry 8-1
Differential Calculus 9-1
Integral Calculus 10-1
Differential Equations 11-1
Probability and Statistical Analysis of Data 12-1
Computer Mathematics 13-1
Numerical Analysis 14-1
Advanced Engineering Mathematics 15-1

Topic II: Theory

Electromagnetic Theory 16-1
Electronic Theory 17-1
Communication Theory 18-1
Acoustic and Transducer Theory 19-1

Topic III: Fields

Electrostatics 20-1
Electrostatic Fields 21-1
Magnetostatics 22-1
Magnetostatic Fields 23-1
Electrodynamics 24-1
Maxwell's Equations 25-1

Topic IV: Circuit Theory

DC Circuit Fundamentals 26-1
AC Circuit Fundamentals 27-1
Transformers 28-1
Linear Circuit Analysis 29-1
Transient Analysis 30-1
Time Response 31-1
Frequency Response 32-1

Topic V: Power—Generation

Generation Systems 33-1
Three-Phase Electricity and Power 34-1

Topic VI: Power—Transmission

Power Distribution 35-1
Power Transformers 36-1
Power Transmission Lines 37-1
Batteries and Fuel Cells 38-1

Topic VII: Power—Machinery

Rotating DC Machinery 39-1
Rotating AC Machinery 40-1

Topic VIII: Power—Lightning

Lightning Protection and Grounding 41-1

Topic IX: Measurement and Instrumentation

Measurement and Instrumentation 42-1

Topic X: Electronics

Electronic Components 43-1
Amplifiers 44-1
Pulse Circuits: Waveform Shaping and Logic . . 45-1

Topic XI: Computers

Computer Hardware Fundamentals 46-1
Computer Software Fundamentals 47-1
Computer Architecture 48-1
Digital Logic 49-1
Logic Network Design 50-1
Synchronous Sequential Networks 51-1
Programming Languages: FORTRAN 52-1
Analog Logic Functions 53-1
Operating Systems, Networking Systems, Standards 54-1
Digital Systems 55-1

Topic XII: Communications

High-Frequency Transmission 56-1
Antenna Theory 57-1
Communication Links 58-1
Signal Formats 59-1
Signal Multiplexing 60-1
Communications Systems and Channels 61-1

Topic XIII: Biomedical Systems

Biomedical Electrical Engineering 62-1

HALLIBURTON EXHIBIT 1019
Halliburton Energy Services, Inc. v. U.S. Well Services, LLC, IPR2023-00557, Page 4

Topic XIV: Control Systems

Analysis of Engineering Systems:
Control Systems 63-1

Topic XV: Electrical Materials

Electrical Materials 64-1

Topic XVI: Codes and Standards

National Electrical Code 65-1

Topic XVII: Professional

Engineering Economic Analysis 66-1
Engineering Law 67-1
Engineering Ethics 68-1
Electrical Engineering Frontiers 69-1
Engineering Licensing in the United States 70-1

Topic VIII: Support Material

Appendices A-1
Glossary G-1

Index I-1

HALLIBURTON EXHIBIT 1019
Halliburton Energy Services, Inc. v. U.S. Well Services, LLC, IPR2023-00557, Page 5

Appendices Table of Contents

1.A Conversion Factors A-1
1.B Common SI Unit Conversion Factors A-3
8.A Mensuration of Two-Dimensional Areas . . A-7
8.B Mensuration of Three-Dimensional Volumes A-9
10.A Abbreviated Table of Indefinite Integrals A-10
11.A Laplace Transforms A-11
12.A Areas Under the Standard Normal Curve A-12
15.A Gamma Function Values A-13
15.B Bessel Functions J_0 and J_1 . . . . . A-14
15.C Properties of Fourier Series for Periodic Signals A-15
15.D Properties of Fourier Transform for Aperiodic Signals A-16
15.E Fourier Transform Pairs A-17
15.F Properties of Laplace Transform A-18
15.G Laplace Transforms A-19
15.H Properties of Discrete-Time Fourier Series for Periodic Signals A-20
15.I Properties of Discrete-Time Fourier Transform for Aperiodic Signals A-21
15.J Properties of z-Transforms A-22
15.K z-Transforms A-23
17.A Room Temperature Properties of Silicon, Germanium, and Gallium Arsenide (at 300K) A-24
18.A Electromagnetic Spectrum A-25
25.A Comparison of Electric and Magnetic Equations A-26
27.A Impedance of Series-Connected Circuit Elements A-28
27.B Impedance of Parallel-Connected Circuit Elements A-29
29.A Two-Port Parameter Conversions A-31
30.A Resonant Circuit Formulas A-32
37.A Electrical Characteristics of Multilayer, Steel-Reinforced, Bare Aluminum Conductors A-33
43.A Periodic Table of the Elements A-34
43.B Semiconductor Symbols and Abbreviations A-35
45.A Standard Zener Diodes A-40
56.A Smith Chart Impedance or Admittance Coordinates A-42
59.A Error Function Values A-43
64.A Periodic Table: Materials' Properties Summary A-45
65.A Comparison of Wire (and Sheet-Metal Gage) Diameters (Thickness) in Inches A-46
65.B Conductor Ampacities A-48
65.C Conductor Properties A-50
65.D Conductor AC Properties A-51
66.A Standard Cash Flow Factors A-52
66.B Factor Tables A-53

HALLIBURTON EXHIBIT 1019
Halliburton Energy Services, Inc. v. U.S. Well Services, LLC, IPR2023-00557, Page 6

Preface to the Sixth Edition

The sixth edition of the *Electrical Engineering Reference Manual* is completely new, yet it owes much to its predecessors and to the outstanding guidance of Professional Publications, Inc.

This text is written as a broad review of electrical engineering design, analysis, and operational fundamentals. In choosing the subjects and preparing the contents, I was directed by the need for a comprehensive study guide for the newly developed Principles and Practice of Engineering (PE) examination in electrical and computer engineering, as well as an all-inclusive reference book for both the practicing engineer and the undergraduate electrical engineering student.

This book strives to meet the needs of three groups. For PE candidates, it is an efficient resource for exploring the exam topics systematically and exhaustively. For the practicing electrical or electronics engineer, it functions as a comprehensive reference, discussing all aspects of these fields in a realistic manner and incorporating the most common formulas and data. Finally, for the engineering student, it presents a thorough review of the fundamentals of electrical engineering.

The *Reference Manual* covers all the topics on the electrical and computer engineering PE exam, providing sufficient background information to preclude the necessity of referring to other texts. Additional subjects not specifically covered on the exam but essential for full understanding of exam topics are explained as well. The mathematical, theoretical, and practical applications of each topic are explored, so the reader may focus on any or all of these areas.

A number of features enhance the usefulness of the text itself. The introduction gives details on how to use this book efficiently. Lists of codes, handbooks, and references recommended for additional study are provided. The means for accessing online updates (and errata) is given. Appendices are provided to exhibit mathematical, basic theoretical, and practical data. A glossary of common electrical terms is included. A comprehensive index is provided to aid in the search for specific information.

The sources used in assembling the content of this work include: (1) information on the electrical and computer PE exam made public by the National Council of Examiners for Engineering and Surveying (NCEES); (2) PE exam review course material published by the National Society of Professional Engineers; (3) electrical engineering curricula at leading colleges and universities; (4) current literature in the field of electrical engineering; (5) information on the numerous electrical engineering websites on the Internet; and (6) survey comments from those who have recently taken the PE exam and/or have purchased previous editions of this text.

Changes from the previous edition are numerous. All are meant to enhance the enduring usefulness of the book. Here are some of the major differences between the fifth and sixth editions.

- Mathematics chapters are added for those who need an extra review before moving on to the electrical engineering information.
- Theory and Fields topics are added, both to improve readers' understanding of principles and to prepare them for potential changes to the PE exam structure.
- Information from the fifth edition is completely rewritten to reflect the mindset of a practicing engineer, and it is separated into generally smaller, more logical divisions.
- The Power topic is expanded to include Generation Systems; Transmission and Distribution Systems; and Lightning Protection and Grounding.
- The Electronics topic is updated to reflect the latest advances.
- The Computers topic is added. The Digital Systems information is expanded to include the basics of interfaces, protocols, and standards.
- The Communications information is gathered into a single topic and expanded to reflect recent progress in the field.
- A chapter on Biomedical Engineering is incorporated.
- Sections on Electrical Materials, Law, Ethics, and Electrical Engineering Frontiers are added for completeness.
- The National Electrical Code is addressed as a separate topic, and there is complete coverage of the 1999 NEC.
- SI units are used, except where common practice dictates customary U.S. units (as in the National Electrical Code topic).

HALLIBURTON EXHIBIT 1019
Halliburton Energy Services, Inc. v. U.S. Well Services, LLC, IPR2023-00557, Page 7

- Nomenclature used is consistent from chapter to chapter and with current SI system usage. Varying symbology is mentioned to minimize confusion when using other texts.
- Topics and individual chapters are arranged in a logical, progressive manner appropriate to the new organization of the PE exam.

The change in the electrical and computer engineering PE exam to a breadth-and-depth format is mirrored in this book. The *Reference Manual* is meant as a compendium of the *breadth* of electrical engineering, providing the *depth* required in individual sections to enable engineers to gain a solid understanding of theory and practical applications.

The scope of this book is beyond that of the PE exam, as it is intended to be. When the exam is complete, you will still need a resource for electrical engineering information, either in your work or simply to satisfy the curiosity that makes us thinking humans. In both the exam and your career, I hope this book serves you well.

Should you find an error in this book, know that it is mine, and that I regret it. Beyond that, I hope two things happen. First, please let me know about it, either by using the "Errata" section on the PPI website at **www.ppi2pass.com** or by filling out the errata card found in this book. Second, I hope you learn something from the error—I know I will! I would appreciate constructive comments and suggestions for improvement, additional questions, and recommendations for expansion so that new editions or similar texts will more nearly meet the needs of future examinees.

John A. Camara, PE

HALLIBURTON EXHIBIT 1019
Halliburton Energy Services, Inc. v. U.S. Well Services, LLC, IPR2023-00557, Page 8

Codes, Handbooks, and References

This edition of the *Electrical Engineering Reference Manual* is based on the following codes, standards, and references. The most current versions or editions available were used. However, the PE examination is not always based on the most currently available codes, as adoption by state and local controlling authorities often lags issuance by several years.

The PPI website (**www.ppi2pass.com**) provides the dates of the codes, standards, and regulations on which NCEES has announced the current exams are based. Use this information to decide which editions of these books should be part of your exam preparation.

The minimum recommended library for the electrical exam consists of this book, the National Electrical Code, a standard handbook of electrical engineering, and two textbooks that cover fundamental circuit theory (both electrical and electronic). Numerous textbooks covering basic electrical engineering topics are listed. These texts, or their equivalent (see the topics in brackets), should be used in preparation for the examination. Adequate preparation, not an extensive portable library, is the key to success.

Codes

Code of Federal Regulations, Title 47—Telecommunications, Ch. 73—"Radio Broadcast Rules." 47CFR73. U.S. Government.[1]

National Electrical Code, NFPA 70. National Fire Protection Association.

National Electric Safety Code, NESC.

Standards Organizations of Interest:

ANSI: American National Standards Institute

EIA: Electronic Industries Alliance

FCC: Federal Communications Commission

IEEE: Institute of Electrical and Electronic Engineers

ISA: Instrument Society of America

ISO: International Organization for Standardization[2]

NEMA: National Electrical Manufacturers Association

[1]The chapters within this title of the Code of Federal Regulations are known as the *FCC Rules*.
[2]ISO is not the acronym for the organization. Rather, "iso" is from the Greek word for "equal."

Handbooks

American Electrician's Handbook. Terrell Croft and Wilford I. Summers. McGraw-Hill.

CRC Materials Science and Engineering Handbook. James F. Shackelford, William Alexander, and Jun S. Park, eds. CRC Press, Inc.

Electronic Engineer's Handbook. Donald Christiansen, ed. McGraw-Hill.

McGraw-Hill Internetworking Handbook. Ed Taylor. McGraw-Hill.

National Electrical Code Handbook. Mark W. Earley, Joseph V. Sheehan, and John M. Caloggero. National Fire Protection Association.

Standard Handbook for Electrical Engineers. Donald G. Fink and H. Wayne Beaty. McGraw-Hill.

The Communications Handbook. Jerry D. Gibson, ed. CRC Press, Inc.

The Computer Science and Engineering Handbook. Allen B. Tucker, Jr., ed. CRC Press, Inc.

References

CRC Standard Mathematical Tables. William H. Beyer, ed. CRC Press, Inc.

McGraw-Hill Dictionary of Scientific and Technical Terms. Sybil P. Parker, ed. McGraw-Hill.

Schaum's Outline Series (Electronics and Electrical Engineering). McGraw-Hill.

The Internet for Scientists and Engineers, Brian J. Thomas. SPIE Press & IEEE Press.

Texts

An Introduction to Digital and Analog Integrated Circuits and Applications. Sanjit K. Mitra. Harper & Row, Publishers. [Digital Circuit Fundamentals]

Applied Electromagnetics. Martin A. Plonus. McGraw-Hill. [Electromagnetic Theory]

HALLIBURTON EXHIBIT 1019
Halliburton Energy Services, Inc. v. U.S. Well Services, LLC, IPR2023-00557, Page 9

Introduction to Computer Engineering. Taylor L. Booth. John Wiley & Sons. [Computer Design Basics]

Electrical Power Technology. Theodore Wildi. John Wiley & Sons. [Power Theory and Application]

Linear Circuits. M.E. Van Valkenburg and B.K. Kinariwala. Prentice-Hall, Inc. [AC/DC Fundamentals]

Microelectronics. Jacob Millman. McGraw-Hill. [Electronic Fundamentals]

HALLIBURTON EXHIBIT 1019
Halliburton Energy Services, Inc. v. U.S. Well Services, LLC, IPR2023-00557, Page 10

Introduction

Part 1: How to Use This Book

QUICKSTART

If you're the type who desires information distilled into concise, pointed bits and if you're ready to begin your studies, here's the paragraph for you:

> The chapters in this book are independent. The number of pages devoted to each chapter is approximately consistent with the emphasis given on the electrical and computer engineering Professional Engineering (PE) examination. The Mathematics, Theory, and Electrical Materials topics are primarily meant as background information for that quick review sometimes necessary to recall seldom-used information. The Appendices and Glossary are meant as quick references for common electrical information. The Professional topics are to refine your professional engineering knowledge. You should focus your studies on the fundamentals. The fundamentals of electrical engineering are covered in the Circuit Theory topic and those of electronic engineering are covered in the Electronics topic. The other topics complete the coverage of the exam, both current and proposed. The index provides an excellent starting place for information searches. Commence study immediately, reviewing all examples and working all the problems in the companion volume, *Practice Problems for the Electrical and Computer Engineering PE Exam.* Start with your weakest areas and work toward your strongest. Review each week. Continue to study until the exam date. Remember to enjoy the learning process and revel in the knowledge gained. Good luck!

However, if you're the type who desires a more thorough review, with a deeper understanding of the PE exam before you begin your studies, the rest of this introduction is for you.

FOR THE PE CANDIDATE

When you are preparing for the PE examination in electrical and computer engineering, the following suggestions may help.

- Concentrate primarily on the fundamentals of electrical and electronic engineering, which are covered in the Circuit Theory and Electronics topics. Take time to review the principles of any problem you find difficult.
- Use the subject index extensively. Every significant term, law, theorem, and concept has been indexed. If you don't recognize a term, look for it in the index.
- Know which subjects in this book are not covered on the PE exam. Those chapters that are supportive do not cover exam subjects. They provide background for the other chapters, enhance understanding of fundamentals, and are useful following the exam for quick reference. (The exam subjects known at the time of this printing are provided in Table 2. These are subject to change; the most up-to-date information can be found on PPI's website (**www.ppi2pass.com**).)
- Become intimately familiar with this book. This means knowing the order of the chapters, the approximate location of important figures and tables, what appendices are available, and so on.
- Skim through a chapter and familiarize yourself with the subjects before starting the practice problems in the companion volume, *Practice Problems for the Electrical and Computer Engineering PE Exam.*
- *Experience in problem solving is the key to success on the exam.* Review examples and solve as many problems as possible in the *Practice Problems* manual. It's a good idea to begin with problems in your weakest areas and work into your strongest areas.
- Use the answers to the practice problems to check your work. If your answer doesn't match the given solution, study the solution to determine why.
- Some subjects appear in more than one chapter, and in more than one topic. Use the index liberally to learn all there is to know about a particular subject.
- The majority of this book uses SI units, except where customary U.S. (English) units are the standard, such as in the National Electrical Code. Some equations in the U.S. system use the term g/g_c. For calculations at standard gravity, the numerical value of this fraction is 1.00. Therefore, it is necessary to incorporate this quantity only in problems with a nonstandard gravity, or when being meticulous with units.

HALLIBURTON EXHIBIT 1019
Halliburton Energy Services, Inc. v. U.S. Well Services, LLC, IPR2023-00557, Page 11

FOR THE PRACTICING ENGINEER AND ENGINEERING STUDENT

If you are a practicing engineer or an engineering major and you purchased this book as a general reference, the following suggestions and information may be of assistance.

- The index is extensive and meant as the starting point for any specific information desired.
- The table of contents is similarly extensive and meant as the starting point for concept information searches.
- The entire book is separated into interrelated topics for the broad overview of a given area of electrical engineering, if an introduction to a given topic is desired.
- The mathematics chapters can be used as quick reviews when working any engineering problems.
- The Advanced Engineering Mathematics chapter provides the minimum information necessary to understand the importance and use of various advanced mathematical concepts, in simple but accurate terms. This should allow you to more fully comprehend and appreciate professional journal- or engineering-focused presentations using such concepts without resorting to a complete review of undergraduate math texts.
- The Advanced Engineering Mathematics chapter is also meant as the starting point for delving more thoroughly into such concepts by providing defining terms and the names of often-used mathematical formulas. This is done to help you through those situations where you know you need more mathematical information but don't even know where to begin, what questions to ask, or what mathematical concept is involved.
- The Appendices and Glossary are meant as quick references for common electrical information.

This book is meant as a broad sweep of the fundamentals of electrical engineering. Here you should find most topics and terms you deal with daily, as well as many that you rarely encounter, all with enough depth of information that this book may be your first and last information stop. At the very least, you will find the term you are looking for, its relative place in the spectrum of electrical engineering, and enough information to perform a more intelligent search for details.

FOR THE INSTRUCTOR

This book focuses on the topics covered in the electrical and computer engineering PE exam. Topics not on the exam are included to provide the necessary background, and to enhance understanding of the fundamental concepts. Any review should focus on the topics covered and omit topics not covered. The fundamentals are in the Circuit Theory topic and the Electronics topic.

The emphasis to be given to any exam topic can be deduced from the approximate percentage of problems on the exam (see Table 2) and the depth of coverage provided in this book.

Use the formulas, illustrations, and tables of data in the text to minimize chalkboard time. Avoid proofs and emphasize problem solution. The greater the number of problems solved, the higher the chances of success on the exam.

The practice problems in the companion volume *Practice Problems for the Electrical and Computer Engineering PE Exam* span the spectrum from quick-answer to in-depth probing of knowledge. The format is similar to that used on the exam. The quick-answer questions, which are given first in each chapter, are meant to ensure understanding of fundamentals and can be used for this purpose during review sessions. The more in-depth problems can be used as homework or timed questions.

One possible review course format follows. The sessions are weekly, with the course lasting three months.

Table 1 *Typical PE Review Course Format*

session	subject covered	chapter(s)
1	Introduction to the PE Exam, Engineering Economics, Computer Mathematics	13, 66, 70
2	DC Fundamentals	26
3	AC Fundamentals	27
4	Linear Circuit Analysis	29
5	Transient Analysis, Bode Plots	30–32
6	Electronic Fundamentals	43
7	Amplifiers and Wave Shaping	44, 45
8	Digital Logic and Design	49, 50
9	Synchronous Sequential Networks, Digital Systems, Computers	48, 51, 55
10	Three-Phase Systems, Transformers, Rotating Machinery	34, 28, 36, 39, 40
11	Instrumentation, Communication	42, 57–61
12	National Electrical Code, Miscellaneous Topics and Review	65

Part 2: Everything You Ever Wanted to Know About the PE Exam

WHAT IS THE FORMAT OF THE PE EXAM?

The NCEES PE examination in electrical and computer engineering consists of two four-hour sessions separated by a one-hour lunch period. The exam is structured in a "breadth-and-depth" format, and all questions are multiple-choice. In the four-hour morning session, all

HALLIBURTON EXHIBIT 1019
Halliburton Energy Services, Inc. v. U.S. Well Services, LLC, IPR2023-00557, Page 12

27 AC Circuit Fundamentals

1. Fundamentals 27-1
2. Voltage 27-2
3. Current 27-3
4. Impedance 27-3
5. Admittance 27-3
6. Voltage Sources 27-4
7. Average Value 27-4
8. Root-Mean-Square Value 27-5
9. Phase Angles 27-7
10. Sinusoid 27-7
11. Phasors 27-8
12. Complex Representation 27-8
13. Resistors 27-9
14. Capacitors 27-9
15. Inductors 27-9
16. Combining Impedances 27-10
17. Ohm's Law 27-11
18. Power 27-11
19. Real Power and the Power Factor 27-11
20. Reactive Power 27-12
21. Apparent Power 27-12
22. Complex Power: The Power Triangle . . . 27-12
23. Maximum Power Transfer 27-13
24. AC Circuit Analysis 27-13

Nomenclature

B	susceptance	S, Ω^{-1}, or mho
C	capacitance	F
f	function	–
f	frequency	Hz, s^{-1}, or cycles/s
G	conductance	S, Ω^{-1}, or mho
i	instantaneous current	A
I	effective or DC current	A
Im	imaginary	–
L	inductance	H
p	instantaneous power	W
pf	power factor	–
P	power	W
Q	reactive power	var (volt-amps reactive or VAR)
R	resistance	Ω
Re	real portion[1]	–
S	apparent power	voltampere (volt-amps or VA)
t	time	s
T	period	s
v, V	voltage	V
X	reactance	Ω
Y	admittance	S, Ω^{-1}, or mho
$\mathbf{Z}$	complex number	–
Z	impedance	Ω

[1]Do not confuse this symbology, Re, for that of the Reynolds number.

Symbols

θ	phase angle	rad
ϕ	phase difference angle	rad
ϕ	impedance angle	rad
φ	current angle ($\theta \pm \phi$)	rad
Ψ	power factor angle	rad
ω	angular frequency	rad/s

Subscripts

0	initial
ave	average
C	capacitor
e	equivalent
eff	effective
i	imaginary
I	current
L	inductor
m	maximum
p	peak
r	real
rms	root-mean-square
R	resistor
s	source
thr	threshold
V	voltage
Z	impedance

1. FUNDAMENTALS

Alternating waveforms have currents and voltages that vary with time in a symmetrical manner. Possible waveforms include square, sawtooth, and triangular along with many variations on these themes. However, for the most part, the variations are sinusoidal in time for many applications in electrical engineering. In this book, unless otherwise specified, currents and voltages referred to are sinusoidal.[2] When sinusoidal, the waveform is nearly always referred to as AC, that is, *alternating current*, indicating that the current is produced by the application of a sinusoidal voltage. This means that the flow of electrons changes directions, unlike DC circuits, where the flow of electrons is unidirectional (though the

[2]Nearly all periodic functions can be represented as sinusoidal functions. The superposition theorem allows the effects of individual sinusoids to be summed to obtain an overall effect, which simplifies the mathematics necessary to obtain a result.

Circuit Theory

HALLIBURTON EXHIBIT 1019

Halliburton Energy Services, Inc. v. U.S. Well Services, LLC, IPR2023-00557, Page 13

magnitude can change in time). A circuit is said to be in a *steady-state* condition if the current and voltage time variation is purely constant (DC) or purely sinusoidal (AC).[3] In this book, unless otherwise specified, the circuits referred to are in a steady-state condition. Importantly, all the methods, basic definitions, and equations presented in Ch. 26 involving DC circuits are applicable to AC circuits. AC electrical parameters have both magnitudes and angles. Nevertheless, following common practice, phasor notation will be used only in cases where not doing so would cause confusion.

2. VOLTAGE

Sinusoidal variables can be expressed in terms of sines or cosines without any loss of generality.[4] A sine waveform is often the standard. If this is the case, Eq. 27.1 gives the value of the instantaneous voltage as a function of time.

$$v(t) = V_m \sin(\omega t + \theta) \qquad 27.1$$

The *maximum value* of the sinusoid is given the symbol V_m and is also known as the *amplitude*. If $v(t)$ is not zero at $t = 0$, the sinusoid is *shifted* and a *phase angle*, θ, must be used, as shown in Fig. 27.1.[5] Also shown in Fig. 27.1 is the *period*, T, which is the time that elapses in one cycle of the sinusoid. The *cycle* is the smallest portion of the sinusoid that repeats.

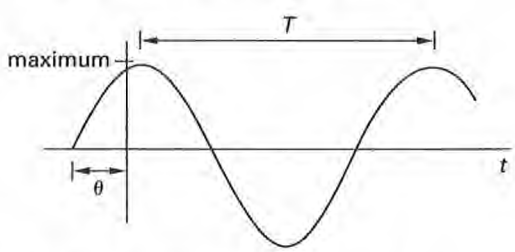

Figure 27.1 *Sinusoidal Waveform with Phase Angle*

Since the horizontal axis of the voltage in Fig. 27.1 corresponds to time, not distance, the waveform does not have a wavelength. The frequency, f, of the sinusoid is the reciprocal of the period in hertz (Hz). The angular frequency, ω, in rad/s can also be used.

$$f = \frac{1}{T} = \frac{\omega}{2\pi} \qquad 27.2$$

$$\omega = 2\pi f = \frac{2\pi}{T} \qquad 27.3$$

[3]Steady-state AC may have a *DC offset*.

[4]The point at which time begins, that is, where $t = 0$, is of no consequence in steady-state AC circuit problems, as the signal repeats itself every cycle. Therefore, it makes no difference whether a sine or cosine waveform is used (though, if one exists, care must be taken to keep the phase angle correct).

[5]The term *phase* is not the same as *phase difference*, which is the difference between corresponding points on two sinusoids of the same frequency.

An AC voltage waveform without a phase angle is plotted as a function of differing variables in Fig. 27.2.

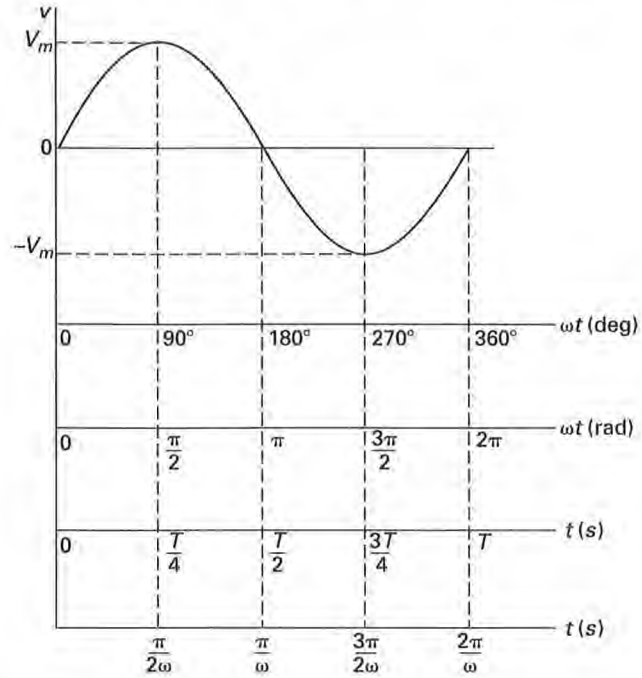

Figure 27.2 *Sine Wave Plots*

Exponentials, $e^{j\theta}$ and $e^{-j\theta}$, can be combined to produce $\sin\theta$ and $\cos\theta$ terms. As a result, sinusoids can be represented in the following equivalent forms.

- trigonometric: $V_m \sin(\omega t + \theta)$
- exponential: $V_m e^{j\theta}$
- polar or phasor: $V_m \angle\theta$
- rectangular: $V_r + jV_i$

The use of complex exponentials and phasor analysis allows sinusoidal functions to be more easily manipulated mathematically, especially when dealing with derivatives. Exponents are manipulated algebraically, and the resulting sinusoid is then recovered using Euler's relation. This avoids complicated trigonometric mathematics. The angles used in exponentials and with angular frequency, ω, must be in radians. From Euler's relation,

$$e^{j\theta} = \cos\theta + j\sin\theta \qquad 27.4$$

$$j = \sqrt{-1} \qquad 27.5$$

Therefore, to regain the sinusoid from the exponential, use Euler's equation, keeping in mind two factors. First, either the real or the imaginary part contains the sinusoid desired, not both.[6] Second, the exponential should

[6]The cosine function could be used as the reference sinusoid, and is in some texts. In this text, unless otherwise specified, assume the sine function is the desired form. The desired form is determined by the representation of the voltage source waveform as either a cosine or a sine function (see Eq. 27.1). Either way, only the phase angle changes.

HALLIBURTON EXHIBIT 1019
Halliburton Energy Services, Inc. v. U.S. Well Services, LLC, IPR2023-00557, Page 14

28 Transformers

1. Fundamentals 28-1
2. Magnetic Coupling 28-1
3. Ideal Transformers 28-3
4. Impedance Matching 28-4
5. Real Transformers 28-5
6. Magnetic Hysteresis: BH Curves 28-5
7. Eddy Currents 28-6
8. Core Losses 28-6

Nomenclature

a	turns ratio	–
B	magnetic flux density	T
f	frequency	Hz, or s^1, or cycles/s
H	magnetic field strength	A/m
i	instantaneous current	A
I	effective or DC current	A
k	coupling coefficient	–
L	self-inductance	H
M	mutual inductance	H
N	number	–
N	number of turns	–
O	origin	–
t	time	s
v	instantaneous voltage	V
V	effective or DC voltage	V
X	reactance	Ω
Z	impedance	Ω

Symbols

μ	permeability	H/m
Φ	magnetic flux	Wb
ω	angular frequency	rad/s

Subscripts

0	initial
c	coercive
c	core
C	capacitor
ep	effective primary
E	exciting
L	inductor
m	magnetizing
m	maximum
m	mutual
p	primary
r	residual
ref	reflected
s	secondary

1. FUNDAMENTALS

A *transformer* is an electrical device consisting of two or more multiturn coils of wire in close proximity to link the magnetic field of one to the other. This linkage allows the transfer of electrical energy from one or more alternating circuits to one or more other alternating circuits by the process of magnetic induction. The transformer can be used to raise or lower the value of a capacitor, inductor, or resistor. It enables the efficient transmission of electrical energy at high voltage over great distances, and then is used to lower the voltage to safe values for industrial, commercial, and household use. The principle of the transformer is also the basic principle of induction motors, alternators, and synchronous motors. The transformer and these other devices are based on laws of magnetic induction.

2. MAGNETIC COUPLING

Any coil of wire, energized by a sinusoidal waveform, produces a magnetic flux, Φ, that is also sinusoidal.[1]

$$\Phi(t) = \Phi_m \sin \omega t \qquad 28.1$$

Faraday's law gives the voltage induced when a portion of the magnetic flux produced in one coil of wire with N_p turns passes through a second coil of wire with N_s turns. The minus sign is a result of Lenz's law, which states that the induced voltage, and thus the induced flux, always acts to oppose the voltage (flux) that created it.

$$v_s(t) = -N_s \left(\frac{d\Phi(t)}{dt}\right) = -N_s \omega \Phi_m \cos \omega t \qquad 28.2$$

The effective voltage is obtained by dividing Eq. 28.2 by the square root of two. The net result is[2]

$$V_s(t) = \frac{-N_s\,(2\pi f)\,\Phi_m \cos \omega t}{\sqrt{2}}$$
$$= -4.44\, N_s f \Phi_m \cos \omega t \qquad 28.3$$

The magnetic flux that passes through both coils is called the *mutual flux*. The magnetic flux that couples only one coil is called the *leakage flux*. The term

[1]This ignores harmonic effects in the core of the transformer stemming from variable permeability. These harmonics must be accounted for if inductive interference with communications circuits is a concern.

[2]The capital V_s is used in Eq. 28.3 to indicate the effective value, even though the voltage remains a function of time.

Circuit Theory

HALLIBURTON EXHIBIT 1019
Halliburton Energy Services, Inc. v. U.S. Well Services, LLC, IPR2023-00557, Page 15

"leakage" is used because any flux that does not link the coils will not contribute to inducing a voltage in the secondary of the transformer. The fluxes are illustrated for a *core transformer* in Fig. 28.1. The magnetic flux Φ_{12} is the flux generated by coil number one that links coil two. The magnetic flux Φ_{11} is the flux generated by coil one that links only coil one. Similarly, the magnetic flux Φ_{21} is the flux generated by coil two that links coil one, and the magnetic flux Φ_{22} is the flux generated by coil two that links only coil two. Magnetic fluxes Φ_{11} and Φ_{22} result in the *self-inductance* of coils one (L_p) and two (L_s), normally called the *primary winding* and *secondary winding*, respectively.

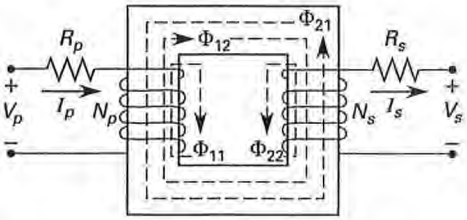

Figure 28.1 *Fluxes in a Magnetically Coupled Circuit*

The *mutual inductance*, M, resulting from magnetic fluxes Φ_{12} and Φ_{21} is defined as the ratio of the electromotive force induced in one coil (circuit) to the rate of change of current in the other coil (circuit). It is the proportionality constant between the induced voltage and the rate of current change.

$$v_p(t) = M\left(\frac{di_s(t)}{dt}\right) \qquad 28.4$$

$$v_s(t) = M\left(\frac{di_p(t)}{dt}\right) \qquad 28.5$$

Just as leakage flux is associated with self-inductance, mutual flux is associated with a *mutual reactance* given by

$$X_m = \omega M \qquad 28.6$$

The induced voltage and generated flux associated with mutual reactance always oppose the flux and current that created them. For example, Φ_{12} in Fig. 28.1, generated by the current in the primary winding, results in a voltage in the secondary winding. This secondary voltage causes a current to flow that generates Φ_{21}, which opposes the original flux and generates a voltage drop of $-(I_s)j\omega M$ in the *primary*. By similar reasoning, a voltage drop of $-I_p j\omega M$ is generated in the *secondary* of the transformer as well. This is illustrated in Fig. 28.2(a), which is equivalent to Fig. 28.1, and in Eqs. 28.7 and 28.8, which are obtained by applying KVL around the indicated loops.

$$\begin{aligned} V_p &= I_p\left(R_p + j\omega L_p\right) - I_s j\omega M \\ &= I_p\left(R_p + jX_p\right) - I_s jX_m \\ &= I_p Z_p - I_s jX_m \end{aligned} \qquad 28.7$$

$$\begin{aligned} V_s &= I_s\left(R_s + j\omega L_s\right) - I_p j\omega M \\ &= I_s\left(R_s + jX_s\right) - I_p jX_m \\ &= I_s Z_s - I_p jX_m \end{aligned} \qquad 28.8$$

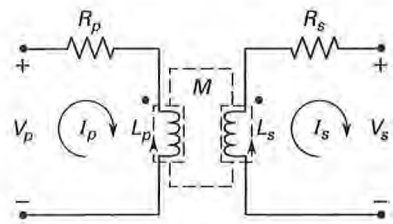

(a) flux linked circuit with mutual inductance

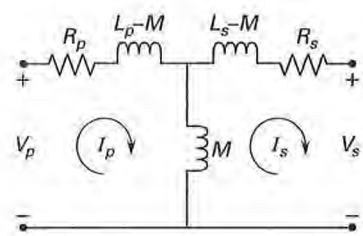

(b) equivalent conductively coupled circuit

Figure 28.2 *Transformer Models*

The dots shown in Fig. 28.2(a) are used to determine the sign of the mutual inductance *when using assumed directions of current flow* in analysis. When analyzing magnetically coupled circuits, the winding sense, or direction, can be determined using the right-hand rule (see Fig. 28.3). First, select a current direction on the primary side and place a dot where the current enters the winding (see Fig. 28.3(a)). Then use the right-hand rule to determine the current direction necessary for an opposing flux to be generated (see Fig. 28.3(b)). Place a dot where the current *leaves* this winding.[3] The two dotted terminals are positive simultaneously. With the instantaneous polarity determined, the need for the pictorial representation of the windings shown in Fig. 28.1 is eliminated. The coupled coils can be shown as in Fig. 28.3(c).

[3]This is equivalent to considering the primary of the transformer to be a load on the source and the secondary of the transformer to be the source for the secondary portion of the circuit.

HALLIBURTON EXHIBIT 1019
Halliburton Energy Services, Inc. v. U.S. Well Services, LLC, IPR2023-00557, Page 16

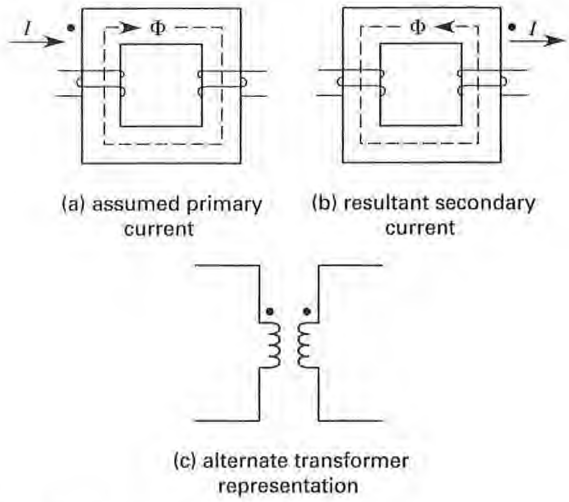

Figure 28.3 *Dot Rule Determination*

The *dot rule* is stated as follows.

- When the assumed currents both enter or both leave a pair of coupled coils by the dotted terminals, the sign of the mutual reactance, or M-terms, is the same as the L-terms in Eqs. 28.7 and 28.8.
- When one current enters by a dotted terminal and the other current leaves by a dotted terminal, the sign of the M-terms is opposite the sign of the L-terms in Eqs. 28.7 and 28.8.

This is shown in Fig. 28.4. The rule is used so that in the application of analysis laws, such as KVL, the resulting equations (see Eqs. 28.7 and 28.8) will be consistent and the mathematical result will be valid for the circuit.

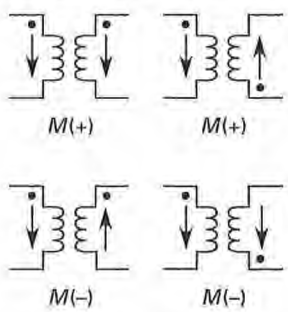

Figure 28.4 *Positive and Negative Mutual Inductances*

The amount of magnetic coupling is measured by the *coupling coefficient (coefficient of coupling)*, k, which is the fraction of the total flux that links both coils. The value of k varies from near zero for radio coils to near 1.0 for iron-core transformers.[4]

$$k = \frac{M}{\sqrt{L_p L_s}} = \frac{X_m}{\sqrt{X_p X_s}} \qquad 28.9$$

[4]In terms of the fluxes in Fig. 28.1, the coupling coefficient $k = 1 - \Phi_{11}/(\Phi_{11} + \Phi_{12})$. The high value of the coupling coefficient in iron cores is the primary reason for their use in transformers.

3. IDEAL TRANSFORMERS

Transformers, which are magnetically coupled circuits, are used to change voltages, match impedances, and isolate circuits. A primary winding current produces a magnetic flux, which induces a current in the secondary coil. To minimize flux leakage and improve efficiency, transformer coils are wound on magnetic permeable cores that improve the mutual inductance, M (see Sec. 28-2).[5] Two common designs, *core transformers* and *shell transformers*, are shown in Fig. 28.5.

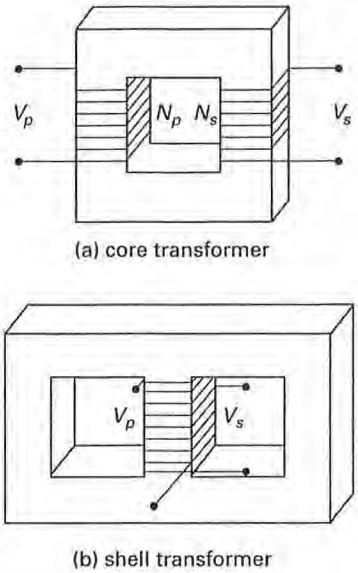

Figure 28.5 *Core and Shell Transformers*

An *ideal transformer* has the following properties.

- The coupling coefficient is unity ($k = 1$), that is, all the flux passes through each coil. There is no leakage flux. Thus, $|M| = |L_p| = |L_s|$, and $|X_m| = |X_p| = |X_s|$.
- The coils have no resistance, that is, $R_p = R_s = 0$. Combined with the first condition, this means that $Z_p = Z_s$ (see Fig. 28.2(b)).
- All the flux is contained inside a path of constant area. This allows the dimensions of the core to be used.
- Core *iron losses* are zero. This indicates that no heating losses exist due to eddy currents or hysteresis loop effects, that is $R_c = 0$ (see Secs. 28-5, 28-6, and 28-7).
- The core is infinitely permeable. Thus, no *magnetizing current* (also called the *exciting current*) is required to create the flux in the core (see Sec. 28-5).

[5]An iron core transformer is indicated by one or more lines drawn between the coil symbols on a circuit diagram.

Circuit Theory

HALLIBURTON EXHIBIT 1019
Halliburton Energy Services, Inc. v. U.S. Well Services, LLC, IPR2023-00557, Page 17

The last two conditions are technically the conditions for an *ideal core*. The transformer and the core can be treated and modeled separately if necessary. The model for an ideal transformer with an ideal core is shown in Fig. 28.6.

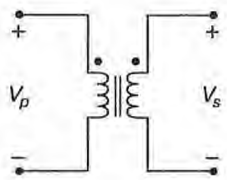

Figure 28.6 *Ideal Transformer and Core*

The ratio of the number of turns of primary to secondary windings is called the *turns ratio* (*ratio of transformation*), a.[6]

$$a = \frac{N_p}{N_s} \qquad 28.10$$

In a lossless transformer, that is, a transformer with 100% efficiency, the power transfer from the primary side equals the power to the secondary side. The relationship in Eq. 28.11 is thus valid.[7]

$$I_p V_p = I_s V_s \qquad 28.11$$

$$a = \frac{N_p}{N_s} = \frac{V_p}{V_s} = \frac{I_s}{I_p} = \sqrt{\frac{Z_p}{Z_s}} \qquad 28.12$$

If the turns ratio is greater than unity, the transformer decreases the voltage and is termed a *step-down transformer*. If the turns ratio is less than unity, the transformer increases the voltage and is termed a *step-up transformer*. The assumptions made for ideal transformers are very good approximations, especially for large iron-core transformers.

Example 28.1

An ideal step-down transformer has 200 primary turns and 50 secondary turns in its coils. 440 V are applied across the primary. The secondary load resistance is 5 Ω. What is the secondary voltage and current?

Solution

The turns ratio is

$$a = \frac{N_p}{N_s} = \frac{200}{50} = 4$$

The secondary voltage and current are

$$V_s = \frac{V_p}{a} = \frac{440\ \text{V}}{4} = 110\ \text{V}$$

$$I_s = \frac{V_s}{R_s} = \frac{110\ \text{V}}{5\ \Omega} = 22\ \text{A}$$

4. IMPEDANCE MATCHING

Matching of impedances between source and load is accomplished to effect the maximum power transfer to the load. The transformer can impedance match. In Fig. 28.7, the impedance in the secondary is

$$Z_s = \frac{V_s}{I_s} \qquad 28.13$$

The impedance "seen" by the primary side, Z_{ep}, is termed the *effective primary impedance* or the *reflected impedance*, Z_{ref}. The reflected impedance is

$$Z_{\text{ep}} = Z_{\text{ref}} = \frac{V_p}{I_p} = Z_p + a^2 Z_s \qquad 28.14$$

The turns ratio can be found from any of the relationships in Eq. 28.12, or specifically from

$$a = \sqrt{\frac{Z_p}{Z_s}} \qquad 28.15$$

For a fixed primary impedance, the maximum power consumption in the load, that is, the maximum power transfer from the source, takes place when the secondary impedance is the conjugate of the primary impedance. Consequently, the conditions necessary to impedance match are

$$R_p = a^2 R_s \qquad 28.16$$

$$X_p = -a^2 X_s \qquad 28.17$$

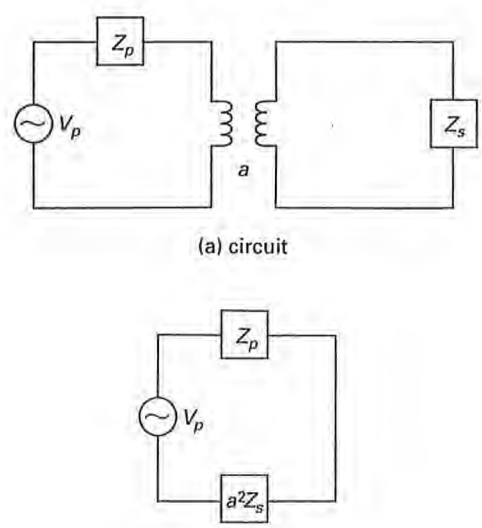

Figure 28.7 *Impedance Matching*

[6]The turns ratio, a, is alternatively defined as the ratio of secondary to primary turns, in which case the relationships of Eq. 28.12 are inverted. Unless specified otherwise, assume the ratio is defined as in Eq. 28.10.

[7]Phasor notation is not used, as all the elements are in phase in an ideal transformer. Further, this is not the formula for power. The 1/2 has been dropped as has the complex conjugate of the current (see Ch. 27).

HALLIBURTON EXHIBIT 1019
Halliburton Energy Services, Inc. v. U.S. Well Services, LLC, IPR2023-00557, Page 18

Example 28.2

A 15 Ω speaker must be impedance matched to a 10 kΩ amplifier in order to produce the highest quality sound. What is the required turns ratio?

Solution

From Eq. 28.15,

$$a = \sqrt{\frac{Z_p}{Z_s}} = \sqrt{\frac{10 \times 10^3\ \Omega}{15\ \Omega}} = 25.8$$

Example 28.3

The primary of an ideal transformer with a turns ratio of 5 contains a 10 Ω resistor and an 80 mH inductor in series. What is the secondary reactance required to maximize the power transfer in this 60 Hz circuit?

Solution

The relationship between the reactances is given by Eq. 28.17.

$$X_p = -a^2 X_s$$

$$X_s = \frac{X_p}{-a^2}$$

The primary reactance is found from

$$X_p = X_L = \omega L = 2\pi f L$$

$$= 2\pi\left(60\ \text{s}^{-1}\right)(80\ \text{mH}) = 30.16\ \Omega$$

Substituting the known and calculated values gives

$$X_s = \frac{X_p}{-a^2} = \frac{30.16\ \Omega}{-(5)^2} = -1.21\ \Omega$$

Example 28.4

For the reactance in Ex. 28.3, what is the value of the capacitance required?

Solution

From Ex. 28.3 and the definition of capacitive reactance,

$$X_s = X_c = -\frac{1}{\omega C}$$

$$C = -\frac{1}{2\pi f X_c} = -\frac{1}{(2\pi)\left(60\ \text{s}^{-1}\right)(-1.21\ \Omega)}$$

$$= 2.19 \times 10^{-3}\ \text{F}$$

5. REAL TRANSFORMERS

Real transformers have flux leakage, resistance in the coils, and resistance and reactance associated with moving the domains within the core. A model of a real transformer is shown in Fig. 28.8.

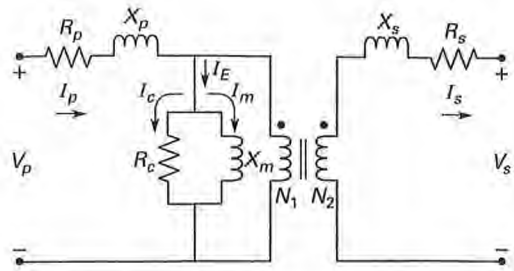

Figure 28.8 *Real Transformer Equivalent Circuit*

In the model of Fig. 28.8, all the core terms are shown on the primary side. This is arbitrary. Many other equivalent models are possible, though they will all contain these components. Components not yet defined follow.

- *Exciting current*, I_E: the total current needed to produce the magnetic flux in the core.
- *Mutual reactance*, X_m, and *magnetizing current*, I_m: the magnetizing current is the current necessary to generate the flux in the core. It is 90°out of phase with the core current.
- *Core resistance*, R_c, and *core current*, I_c: the core resistance represents iron losses (see Secs. 28-6 and 28-7). The core current is the current necessary to overcome those losses. This current flows in the primary windings but occurs due to resistive losses physically occurring in the core.

Each leakage flux corresponds to a "loss" of induced voltage in its coil. This is considered to have been caused by an equivalent reactance, X_p or X_s. In terms of the flux, these reactances are

$$X_p = \omega L_p = \frac{V_{X_p}}{I_p} = \frac{4.44 f \Phi_p N_p}{I_p} \qquad 28.18$$

$$X_s = \omega L_s = \frac{V_{X_s}}{I_s} = \frac{4.44 f \Phi_s N_s}{I_s} \qquad 28.19$$

The turns ratio is related to the leakage inductances by the following.

$$a = \sqrt{\frac{L_p}{L_s}} \qquad 28.20$$

6. MAGNETIC HYSTERESIS: BH CURVES

The core of a transformer, especially when specifically designed to increase the coupling, is made from iron. Iron is a ferromagnetic material. When a magnetic field, in this case produced by the coil of the transformer, is applied to a ferromagnetic material, a phenomenon known as *magnetic hysteresis* takes place. This phenomenon is shown in Fig. 28.9.

Circuit Theory

HALLIBURTON EXHIBIT 1019
Halliburton Energy Services, Inc. v. U.S. Well Services, LLC, IPR2023-00557, Page 19

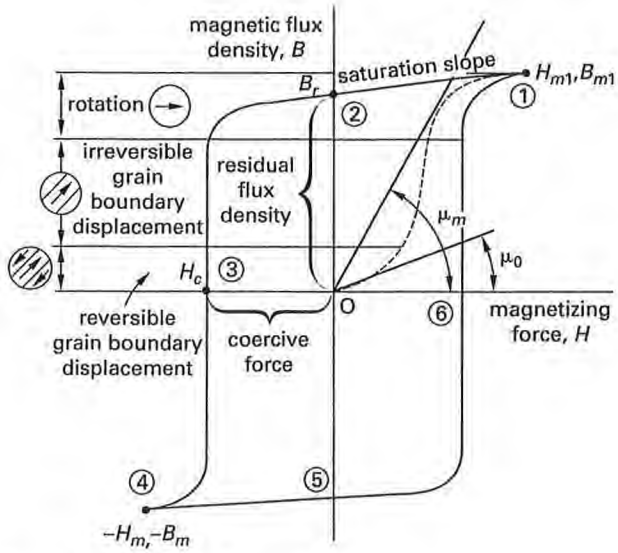

Figure 28.9 *Magnetic Hysteresis Loop*

Figure 28.9 plots the magnetic flux density, B, produced for various values of the magnetizing force, H. The relationship is decidedly nonlinear.[8] When a material is first magnetized, the initial BH values occur along the curve from the origin, O, to point 1. This part of the curve, O1, is known as the *initial* or *normal magnetization curve.* The initial slope of O1 is called the *initial permeability,* μ_o (not to be confused with the permeability of free space). The slope of the line from the origin to a point tangent to the normal magnetization curve is called the *maximum permeability,* μ_m. The maximum value of B reached at point 1 is called the *saturation flux density.* If the magnetic field is then decreased, the flux density decreases as well, but not in proportion to the decrease in magnetizing field strength. When H equals zero, at point 2, the amount of magnetic flux density remaining in the core is called the *residual flux density,* B_r. In order to reduce the magnetic field in the core to zero, the magnetizing force must increase in reverse direction of that initially applied. The magnitude of the magnetizing force where B again becomes zero, at point 3 is called the *coercive force,* H_c.

As the magnetizing force continues to increase in the negative direction, the flux density again increases, but in opposite polarity, eventually reaching saturation in this direction at point 4. As the magnetic field is again removed, the magnitude of the magnetic flux density decreases to point 5. A positive value of H (equal to H_c) is required to drive the flux density to zero, at point 6.

As the magnetizing force is increased further, the curve from point 6 to point 1 is followed, completing the cycle but not returning to the origin. The domain, or grain boundary movement, that is the ultimate cause of this curve is shown for the positive portion of the cycle. The phenomenon whereby the values of B lag behind the values of H is called *hysteresis.* The entire loop is called the *hysteresis loop.* The area within the loop represents the energy loss that occurs due to heating from the movement of the magnetic domains.[9]

7. EDDY CURRENTS

Any conducting mass exposed to variations in magnetic flux contains *eddy,* or *Foucault, currents.* These currents are a result of magnetic induction caused by the relative motion due either to variations in the magnetic field or the movement of the mass itself. Such currents result in Joule heating in the mass—in this case, in the core of the transformer. Such an energy loss, in a transformer or in the iron portions of electric machinery, is minimized by dividing the magnetically conducting material into small segments called *laminations,* coated with insulating material. This reduces the length of the path in which current exists.

8. CORE LOSSES

Core losses are defined as the rate of energy conversion into heat in a magnetic material due to the presence of an alternating or pulsing magnetic field. This type of loss is also called the *excitation loss* or *iron loss* (see Sec. 28-5). Core losses are the combination of magnetic hysteresis and eddy current losses.

[8]To this point, all the relationships and equations have assumed linearity in the transformers.

[9]The portion of the energy used to create the flux comes from I_m (see Sec. 28-5). The portion of the energy that is lost due to heating comes from I_c (see Sec. 28-5). The current I_c also supplies any eddy current losses (see Sec. 28-7).

HALLIBURTON EXHIBIT 1019
Halliburton Energy Services, Inc. v. U.S. Well Services, LLC, IPR2023-00557, Page 20

33 Generation Systems

1. Fossil Fuel Plants 33-1
2. Nuclear Power Plants 33-3
3. Hydroelectric Power 33-3
4. Cogeneration Plants 33-3
5. Prime Movers 33-4
6. Alternating Current Generators 33-5
7. Parallel Operation 33-6
8. Direct Current Generators 33-7
9. Energy Management 33-9
10. Power Quality 33-9

Nomenclature

B	magnetic flux density	T
c	speed of light	m/s
E	energy	J
f	frequency	Hz, s^{-1}, or cycles/s
f_{droop}	frequency droop	Hz/kW
h	enthalpy	kJ/kg
I	effective or DC current	A
m	mass	kg
N	synchronous speed	r/min or min^{-1}
P	poles	–
Q	heat	J
s	specific entropy	kJ/kg·K
T	temperature	°C or K
V_{droop}	voltage droop	V/kVAR
W	work	kJ

Symbols

ω	armature angular speed	rad/s

Subscripts

nl	no load
s	synchronous
sys	system

1. FOSSIL FUEL PLANTS

The electric utility industry is one of the largest users of fossil fuels. Fossil fuels are those composed of hydrocarbons, such as petroleum, coal, and natural gas. Typical combustion of the fuel produces high-pressure, high-temperature steam.[1] The pressures range from 16.5–24 MPa (2400–3500 psig). A common steam temperature is 540°C (1000°F). The basic thermodynamic cycle is the Rankine cycle shown in Fig. 33.1, along with typical plant components. Turbines used to drive the electrical generators spin at 3600 rpm. The efficiency of the cycle is proportional to the temperature difference between the temperature at the *source*, that is, the steam generator, and the *sink*, that is, the cooling medium of the condenser.

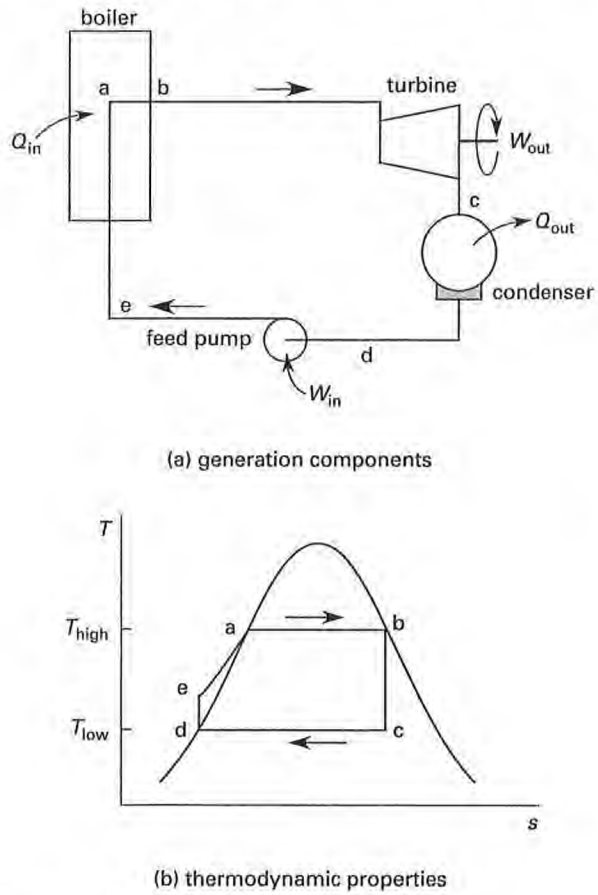

Figure 33.1 *Basic Rankine Cycle*

Efficiency improves when the source temperature is raised. Additionally, turbine blade wear is reduced as the moisture content in the expanding steam is reduced. Both are accomplished by adding heat to the steam beyond that required to maintain the steam in the vapor phase, that is, raising the steam temperature above the saturation temperature for the associated pressure, a concept known as *superheat*. The maximum practical metallurgical limit on superheat is approximately 625°C (1150°F). In some situations, moisture still forms in the low-pressure turbine stages. This problem is overcome by reheating the steam after partial isentropic

[1]Steam is the most common substance used, but the principles discussed are applicable to vapor cycles in general.

Power–Generation

HALLIBURTON EXHIBIT 1019
Halliburton Energy Services, Inc. v. U.S. Well Services, LLC, IPR2023-00557, Page 21

is induced is called the *armature*. For alternating current generators, the armature is physically located on the *stator*, that is, the stationary portion of the generator. The *field* produces the magnetic flux that reacts with the armature. For alternating current generators, the field is located on the *rotor*, that is, the rotating portion of the generator, and is supplied by a direct current that maintains the electromagnetic pole strength, and thus the output voltage, at the desired value. This arrangement—field on the rotor, armature on the stator—is used primarily because the field current is smaller, easing design requirements for the electric connection, which is commonly made through slip rings and brushes or via brushless exciters. This allows the high-current armature output connections to be made on the stationary portion of the generator. The rotors are either *salient pole* or *cylindrical* as shown in Fig. 33.7. Salient pole rotors are utilized in low rpm applications (approximately 300 rpm) due to mechanical restrictions. The generation of an AC output voltage using a permanent magnet field is shown in Fig. 33.8.

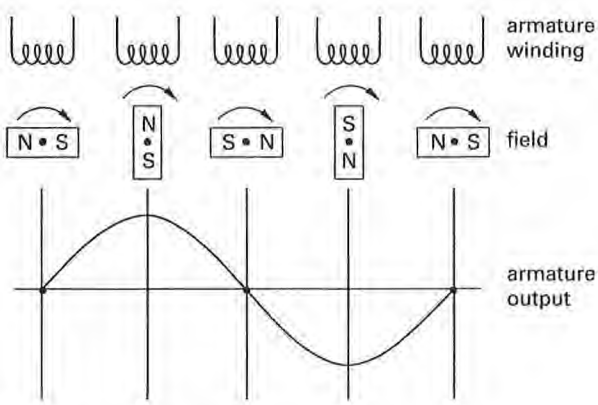

Figure 33.8 *AC Output Generation*

The speed of rotation of the magnetic field in a synchronous machine is called the *synchronous speed*. Since two poles must pass a given point on the armature in order to complete one cycle (360 electrical degrees), the synchronous speed is given by

$$N_s = \frac{120f}{P} \qquad 33.5$$

The term N is the synchronous speed in revolutions per minute, f is frequency in Hertz, and P is the number of poles.[3] The mechanical distance around the periphery of an electrical machine is often measured in electrical degrees, with 360° the distance between a pole pair. Since one cycle of a sine wave is 360°, the mechanical and electrical degrees are related by Eq. 33.6.

$$\text{mechanical degrees} = \frac{\text{electrical degrees}}{\text{number of pole pairs}} \qquad 33.6$$

Losses in an AC electrical generator include *windage* and *friction*, *core*, *armature copper*, *field copper*, and *stray* or *load loss*.

Example 33.1

At what speed does the rotor of a four-pole AC generator turn?

Solution

The rotor in an AC generator contains the field, which rotates at synchronous speed. Since the frequency was not stated, assume 60 Hz. Substituting into Eq. 33.5 gives

$$N_s = \frac{120f}{P} = \frac{(120)\,(60\text{ Hz})}{4} = 1800\text{ rpm}$$

Example 33.2

What is the mechanical spacing, in degrees, between the poles of a 12-pole AC generator?

Solution

The mechanical spacing is determined by

$$\text{mechanical degrees} = \frac{\text{electrical degrees}}{\text{number of pole pairs}} = \frac{360°}{6} = 60°$$

7. PARALLEL OPERATION

Parallel operation of generators occurs for myriad reasons, including shifting of the load to shut down a generator for maintenance, to increase the capacity available, and so on. Prior to paralleling two synchronous generators, the following conditions must be met.

- The phase sequence must be identical. The *phase sequence* is the order in which the phase voltages successively reach their maximum positive values. The phase sequence, normally a-b-c, is determined during construction and does not routinely require verification.
- Frequency must be matched. That is, the rotation speeds are matched. This minimizes current surges due to the shifting of real load when the oncoming generator is connected.
- Voltages must be matched. This minimizes current surges due to the shifting of reactive load when the oncoming generator is connected.

[3]The magnetic field is moving on the armature but the armature itself is stationary. Also, a pole is either a single north or a single south. This formula is sometimes written for pole pairs, in which case the 120 would have to be 60.

HALLIBURTON EXHIBIT 1019
Halliburton Energy Services, Inc. v. U.S. Well Services, LLC, IPR2023-00557, Page 22

The division of real load among generators operating in parallel is determined by the speed of the generators and the characteristics of the prime mover speed-governing system as shown in Fig. 33.9. The slope of the *speed characteristic line*, also called the *generator* or *frequency droop* (f_{droop}), is determined by the speed-governing system and is constant. The total load is also constant, assuming no loads are started or secured. If the generator's speed is manually changed, that is, if the no-load frequency is adjusted, the associated characteristic line moves up or down and the load is shifted to or from the generator. The resulting frequency of the system (f_{sys}) would thus rise or fall as well. If a load is added to or removed from the system without a change in the generator's no-load frequency, the additional load results in a drop in the system frequency determined by Eq. 33.7.

$$P = \frac{f_{\text{sys}} - f_{\text{nl}}}{f_{\text{droop}}} \qquad 33.7$$

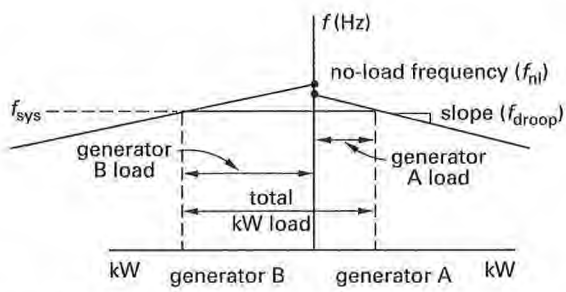

Figure 33.9 *Real Load Sharing*

P is the total real power carried by the generator, f_{sys} is the operating frequency of the system, and f_{nl} is the no-load frequency. The frequency droop, f_{droop}, is the slope of the speed characteristic line in units of Hz/kW. Although negative, the frequency droop is often stated as a positive value. If the droop is given or used as a positive value, Eq. 33.7 becomes

$$P = \frac{f_{\text{nl}} - f_{\text{sys}}}{f_{\text{droop}}} \qquad 33.8$$

The division of reactive load takes place in the same manner, but is controlled by the voltage regulators. Reactive load sharing is illustrated in Fig. 33.10. The reactive power carried by a generator is determined by Eq. 33.9.

$$Q = \frac{V_{\text{sys}} - V_{\text{nl}}}{V_{\text{droop}}} \qquad 33.9$$

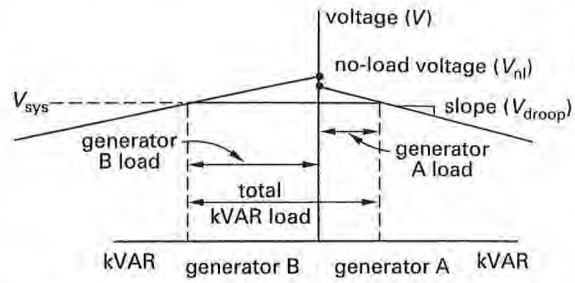

Figure 33.10 *Reactive Load Sharing*

If the droop is given or used as a positive value, Eq. 33.9 becomes

$$Q = \frac{V_{\text{nl}} - V_{\text{sys}}}{V_{\text{droop}}} \qquad 33.10$$

The slopes of the speed and voltage characteristic lines in Figs. 33.9 and 33.10 are normally given in percent change of rated frequency or voltage from a no-load to a full-load condition. These are called the *speed regulation* and *voltage regulation* of a generator, respectively.

Example 33.3

A 1000 MW generator has a speed droop of 1%. Rated frequency is 60 Hz. If the generator carries 500 MW at 60 Hz, what is the no-load frequency setpoint of the speed-governing system?

Solution

A speed droop of 1% indicates a change in frequency of 0.01 × 60 Hz from 0 kW to 1000 MW, that is, from no-load to full load. Thus, the slope of the speed characteristic line, or curve, is 0.6 Hz/1000 MW. As the droop is stated as a positive value, Eq. 33.8 is used.

$$P = \frac{f_{\text{nl}} - f_{\text{sys}}}{f_{\text{droop}}}$$

$$f_{\text{nl}} = P f_{\text{droop}} + f_{\text{sys}}$$

$$= (500\ \text{MW})\left(\frac{0.6\ \text{Hz}}{1000\ \text{MW}}\right) + 60\ \text{Hz}$$

$$= 60.3\ \text{Hz}$$

8. DIRECT CURRENT GENERATORS

Direct current generators operate under the same principles as AC current generators, except the output is manipulated to provide the desired DC. The definitions of armature and stator remain the same as for AC generators, but their locations are reversed. The field of a DC generator is located on the stator, or stationary portion of the generator. The armature is located on the rotor, or rotating portion of the generator. This arrangement is used primarily because of the need to change

Power–Generation

HALLIBURTON EXHIBIT 1019
Halliburton Energy Services, Inc. v. U.S. Well Services, LLC, IPR2023-00557, Page 23

34 Three-Phase Electricity and Power

1 Benefits of Three-Phase Power . . . 34-1
2 Generation of Three-Phase Potential . . . 34-1
3 Distribution Systems . . . 34-2
4 Balanced Loads . . . 34-2
5 Delta-Connected Loads . . . 34-3
6 Wye-Connected Loads . . . 34-3
7 Delta-Wye Conversions . . . 34-4
8 Per-Unit Calculations . . . 34-4
9 Unbalanced Loads . . . 34-5
10 Three-Phase Transformers . . . 34-6
11 Two-Wattmeter Method . . . 34-7
12 Faults and Fault Current . . . 34-7

Nomenclature

a	ratio of transformation	
I	current	A
N	number of turns	
P	power	W
pf	power factor	–
Q	reactive power	VAR
R	resistance	Ω
S	apparent power	VA
t	time	s
T	transformer	
V	voltage	V
X	reactance	Ω
Z	impedance	Ω

Symbols

θ	impedance angle	rad
Θ	power factor angle	rad
ω	nominal angular speed	rad/s

Subscripts

l	line
L	inductor
p	phase
pri	primary
pu	per unit
sec	secondary
t	total

1. BENEFITS OF THREE-PHASE POWER

Three-phase energy distribution systems use power and smaller conductors and, therefore, are more efficient than multiple single-phase systems providing the same power. Three-phase motors provide a uniform torque, not a pulsating torque as the single-phase motors. Three-phase induction motors do not require additional starting windings or associated switches. When rectified, three-phase voltage has a smoother waveform and less ripple to be filtered out.

2. GENERATION OF THREE-PHASE POTENTIAL

The symbolic representation of an AC generator that produces three equal sinusoidal voltages is shown in Fig. 34.1(a). The generated voltage is known as the *phase voltage*, V_p, or *coil voltage*. (Three-phase voltages are almost always stated as effective values.) One primarily to the location of the windings, the three sinusoids are 120° apart in phase as shown in Fig. 34.1(b). If V_a is chosen as the reference voltage, then Eqs. 34.1 through 34.3 represent the phasor forms of the three sinusoids. At any moment, the vector sum of these three voltages is zero.

$$V_a = V_p \angle 0° \qquad 34.1$$

$$V_b = V_p \angle -120° \qquad 34.2$$

$$V_c = V_p \angle -240° \qquad 34.3$$

(a) Alternator

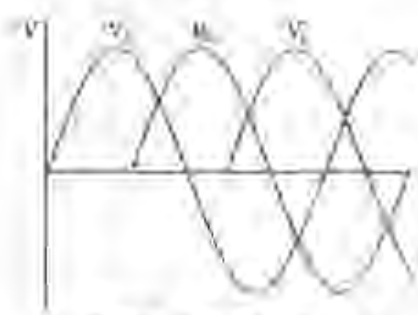

(b) ABC (positive) sequence

Figure 34.1 Three-Phase Voltage

Equations 34.1 through 34.3 define an ABC or positive sequence. That is, V_a reaches its peak before V_b, and V_b peaks before V_c. With a CBA, [illegible]

Power Generation

HALLIBURTON EXHIBIT 1019
Halliburton Energy Services, Inc. v. U.S. Well Services, LLC, IPR2023-00557, Page 24

ACB, or *negative sequence*, obtains by rotating the *field magnet* in the opposite direction, the order of the delivered sinusoids is reversed (i.e., V_a, V_b, V_c).

Although a set-conductor transmission line could be used to transmit the three voltages, it is more efficient to interconnect the windings. The two methods are commonly referred to as *delta (mesh)* and *wye (star)* connections.

Figure 34.2(a) illustrates delta source connections. The voltage across any two of the lines is known as the *line voltage (system voltage)* and is equal to the phase voltage. Any of the coils can be selected as the reference as long as the sequence is maintained. For a positive (ABC) sequence,

$$V_{CA} = V_p \angle 0^\circ \qquad \text{eq. 4}$$

$$V_{AB} = V_p \angle -120^\circ \qquad \text{eq. 5}$$

$$V_{BC} = V_p \angle -240^\circ \qquad \text{eq. 6}$$

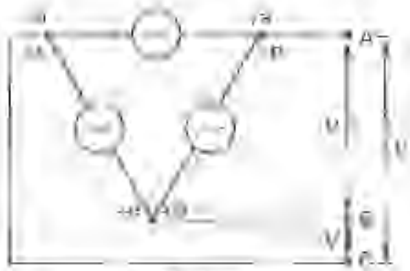

(a) delta

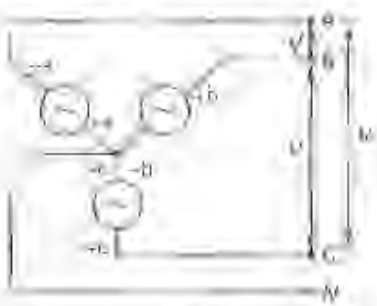

(b) wye

Figure 34.2 Delta and Wye Voltage Connections

Wye-connected sources are illustrated in Fig. 34.2(b). While the *line-to-neutral voltages* are equal to the phase voltage, the line voltages are greater—$\sqrt{3}$ times the phase voltage. The *ground wire connection* is needed to carry current only if the system is unbalanced.[1] Use Eq. 4-3 for an ABC sequence; the line voltages are

$$V_{AB} = \sqrt{3}V_p \angle 30^\circ \qquad \text{eq. 7}$$

$$V_{BC} = \sqrt{3}V_p \angle -90^\circ \qquad \text{eq. 8}$$

$$V_{CA} = \sqrt{3}V_p \angle -210^\circ \qquad \text{eq. 9}$$

[1] The [illegible]

Although the magnitude of the line voltage depends on whether the generator coils are delta- or wye-connected, each connection results in three equal sinusoidal voltages, each 120° out of phase with one another.

3. DISTRIBUTION SYSTEMS

Three-phase power is delivered by three-wire and four-wire systems. A *four-wire system* consists of three power conductors and a neutral conductor. A *three-wire system* contains only the three power conductors.

Utility power distribution starts with generation. The generators connected through step-up *subtransmission transformers* that supply *transmission lines*. The actual transmission line voltage depends on the distance between the subtransmission transformers and the user. Distribution *substation transformers* reduce the voltage from the transmission line level to approximately 33 kV. The *primary distribution system* delivers power to *distribution transformers* that reduce voltage still further to between 120 and 600 V.

4. BALANCED LOADS

Three impedances are required to fully load a three-phase voltage source. The impedances in a three-phase system are *balanced* when they are identical in magnitude and angle. The voltage and line currents, as well as the coil apparent (eVA) and reactive powers, are all identical in a balanced system. Also, the power factor is the same for each phase. Therefore, balanced systems can be analyzed on a per-phase basis. Such calculations are known as *one-line analyses*.

Figure 34.3 illustrates the vector diagram for a balanced delta three-phase system. The phase voltages, V, are separated by 120° phase angles, as are the phase currents, I. The phase difference angle, ϕ, between a phase voltage and its respective phase current depends on the phase impedance. With delta-connected balanced loads, the phase and line currents differ in phase by 30°.

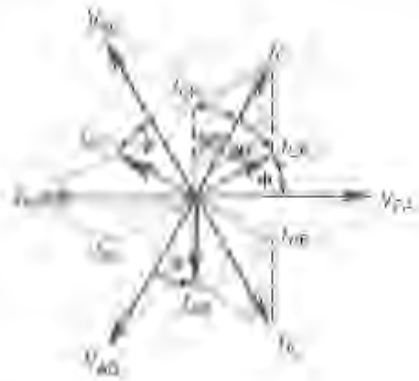

Figure 34.3 Delta-Connected Balanced Load Vector Diagram

HALLIBURTON EXHIBIT 1019
Halliburton Energy Services, Inc. v. U.S. Well Services, LLC, IPR2023-00557, Page 25

35 Power Distribution

1. Fundamentals 35-1
2. Classification of Distribution Systems 35-3
3. Common-Neutral System 35-3
4. Overcurrent Protection 35-4
5. Pole Lines 35-4
6. Underground Distribution 35-5
7. Fault Analysis: Symmetrical 35-6
8. Fault Analysis: Unsymmetrical 35-9

Nomenclature

C	capacitance	F
E	electric field strength	V/m
I	effective or DC current	A
l	length	m
L	inductance	H
pf	power factor	–
pu	per unit	–
P	pressure	Pa
r	radius	m
v	wind velocity	km/hr
V	effective or DC voltage	V
X	reactance	Ω
Z	impedance	Ω

Symbols

ε	permittivity	F/m
ε_0	free-space permittivity	8.854×10^{-12} F/m
μ_0	free-space permeability	1.2566×10^{-6} H/m
ξ	ratio of radii	–

Subscripts

0	zero sequence
1	positive sequence
2	negative sequence
d	direct
g	generator
l	line
m	motor
n	neutral
p	phase
q	quadrature
t	terminal

1. FUNDAMENTALS

The *electric distribution system* is the circuitry, high-voltage switchgear, transformers, and related equipment that receives high voltage from the source and delivers it at lower voltages. Its function is to receive power from large bulk sources, that is, generation sources, and distribute it to users at the voltage level and degree of reliability required. A hypothetical distribution system one-line diagram is shown in Fig. 35.1. The electric utility may consider the distribution system as that portion of Fig. 35.1 from the distribution substation to the consumer. The symbols used are explained in Fig. 35.2.

One-line diagrams can be used for balanced three-phase systems since the per-phase values are equal. If a neutral line exists, it is not shown. If the diagram is used for *load studies*, the circuit breaker, fuse, and other switching device locations are not shown since they are of no concern. If the diagram is used for *stability studies* or *fault analysis*, the locations and characteristics of circuit breakers, fuses, relays, and other protective devices are shown.

At the *generation level* in Fig. 35.1, the voltage is approximately 6.9 kV. The synchronous generators are shown with their neutrals connected through impedances designed to limit surges in case of a fault in the generator circuit. One or more generators may be attached to a given power bus.

At the *transmission level*, the transmission lines connect the various generators to one another and to the subtransmission lines.

At the *subtransmission level*, the voltage range is 12.5 to 245 kV. The most commonly used voltages in order of usage are 115 kV, 69 kV, 138 kV, and 230 kV. The subtransmission lines are usually in *grid form*. The grid form allows connections between input busses and various paths to each distribution substation, thus increasing reliability. A minimum of two switchable inputs to each substation input bus is normally used.

At the *primary distribution level*, the voltage range is 4.2 to 34.5 kV. The most commonly used voltages are 12.5 kV, 25 kV, and 34.5 kV. The actual voltage level is controlled with taps on the substation transformers. The distribution substation supplies several distribution transformers connected in a radial, tree, loop, or grid system. The distribution transformers are mounted on poles, grade-level pads, or underground near the user (a substation may be dedicated to a single large user.) Secondary mains operate at a voltage range of 120 to 600 V.[1]

[1]The ANSI standard for Voltage Range A is 114/228 to 126/252 V at the service entrance and 110/220 to 126/252 V at the utilization point.

Power–Transmission

HALLIBURTON EXHIBIT 1019
Halliburton Energy Services, Inc. v. U.S. Well Services, LLC, IPR2023-00557, Page 26

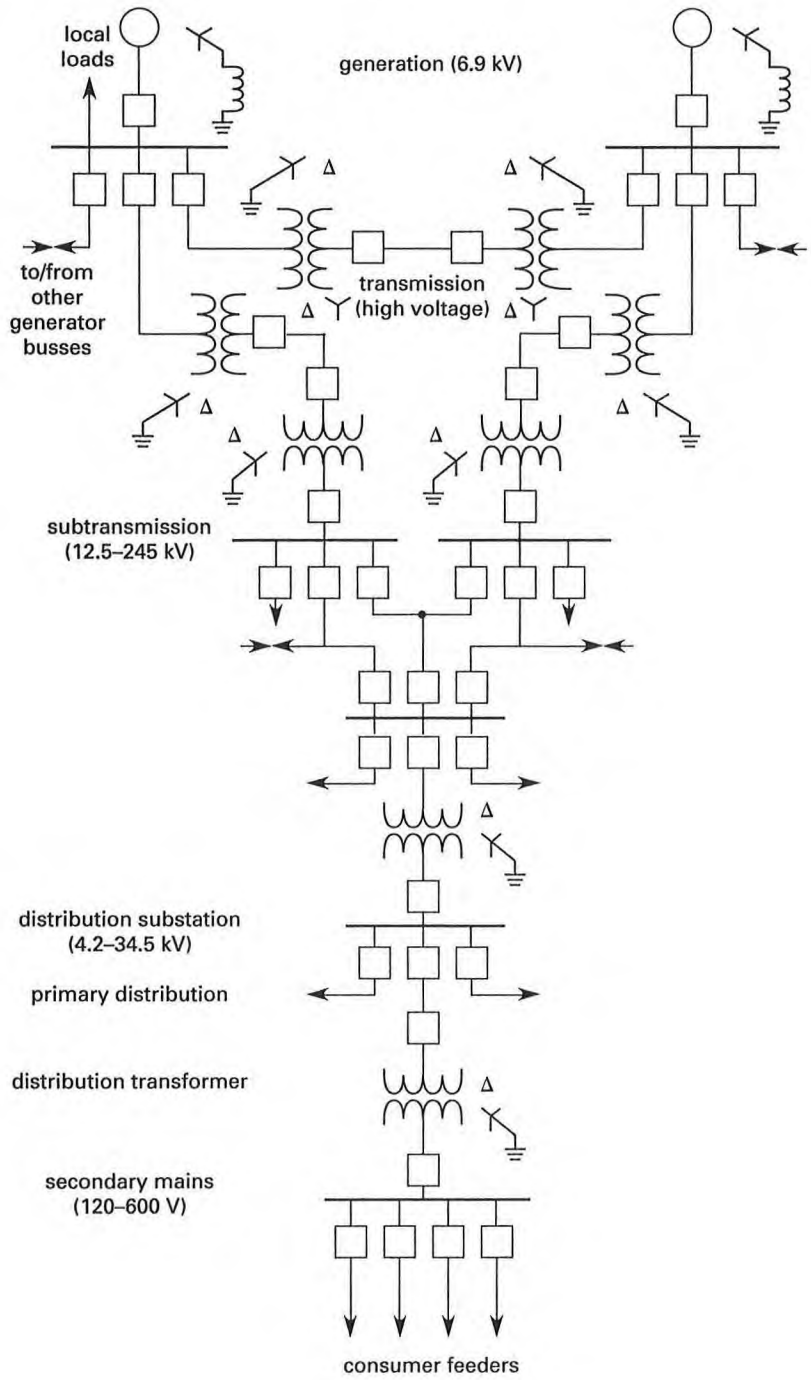

Figure 35.1 *Distribution System*

HALLIBURTON EXHIBIT 1019
Halliburton Energy Services, Inc. v. U.S. Well Services, LLC, IPR2023-00557, Page 27

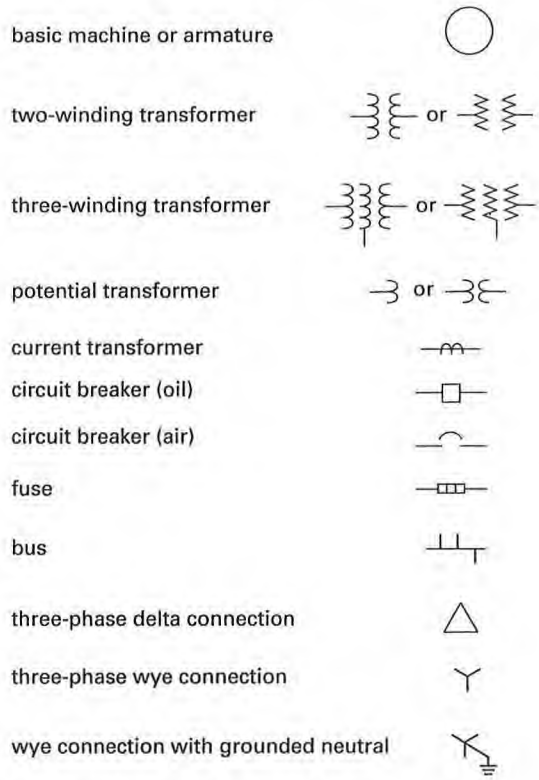

Figure 35.2 Common Distribution Symbols

2. CLASSIFICATION OF DISTRIBUTION SYSTEMS

Distribution systems are classified in a number of ways, including

- current (AC or DC)
- voltage (120 V, 12.5 kV, 15 kV, 34.5 kV, etc.)
- type of load (residential, commercial, lighting, power, etc.)
- number of conductors (two-wire, three-wire, etc.)
- construction type (overhead or underground)
- connection type

Connection types include radial (seldom used), loop (see Fig. 35.3), network, multiple (see Fig. 35.4), and series (used primarily for street lighting).

3. COMMON-NEUTRAL SYSTEM

In practice, due to economic and operating advantages, almost all distribution systems are three-phase four-wire, common-neutral primary systems like the one shown in Fig. 35.5. The fourth wire acts as a neutral for both the primary and secondary systems (see Fig. 35.1) although one side of the transformer is delta. (The delta connection is used because the third-harmonic voltages generated by the nonlinear nature of the transformer circulate within the delta and do not affect the line currents or voltages.) The neutral is grounded in numerous locations, including at each distribution transformer and to metallic water piping or grounding devices at each service entrance.[2] The fourth wire carries a portion of the unbalanced currents that may exist, while the remainder flows through the earth. Some of the advantages of such a system follow.

- Unbalanced currents flow through the neutral or the earth, thus ensuring approximately balanced three-phase current flow through the generator. This evens the countertorque, minimizes vibration, and extends bearing life.

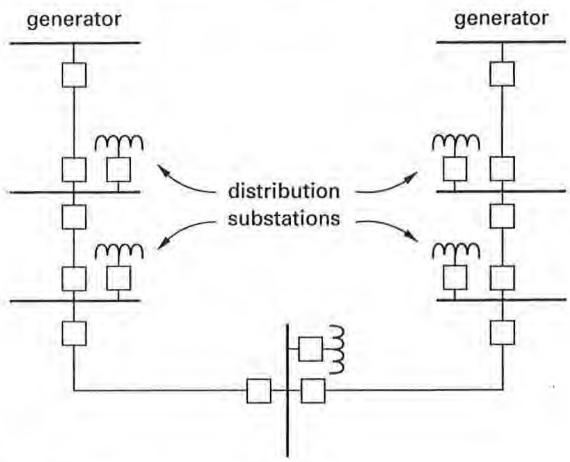

Figure 35.3 Loop Distribution Pattern

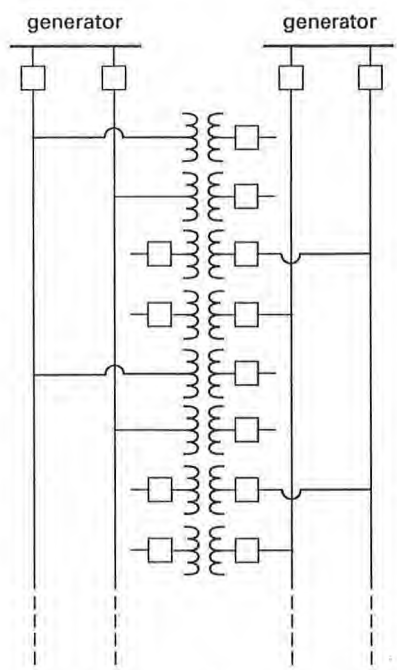

Figure 35.4 Multiple Distribution Pattern

[2]The use of nonmetallic water piping requires the use of other grounding techniques described in the National Electrical Code®.

Power–Transmission

HALLIBURTON EXHIBIT 1019
Halliburton Energy Services, Inc. v. U.S. Well Services, LLC, IPR2023-00557, Page 28

- Single-phase circuits require only one insulated conductor and the uninsulated neutral, thus lowering wiring costs.
- Protective devices need to be placed on only one wire of a single-phase circuit to provide adequate protection, significantly lowering costs.

Other possible systems include the *three-phase three-wire system*, which is not widely used for public power distribution except in California. Such a system finds application in marine systems that operate ungrounded to improve reliability. *Two-phase systems* are rarely used. *Direct-current systems*, though they have some advantages, have been replaced by AC systems. *Series systems* are used primarily for street lighting but have been largely replaced by multiple systems.

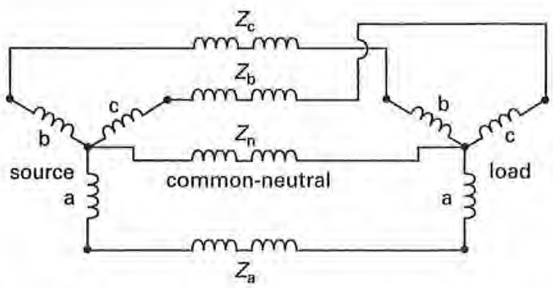

Figure 35.5 *Common-Neutral (Three-Phase Four-Wire System)*

4. OVERCURRENT PROTECTION

Overcurrent is current in excess of the rated current of the equipment or the ampacity of the conductors. It may be caused by an overload, short circuit, or ground. *Overload* is any condition beyond the rating of the electrical device supplied that if continued for an extended time will damage the equipment or cause overheating. A short circuit or ground fault is not an overload. The short circuit or ground fault conditions can result in extremely high currents for very short time periods. Overload conditions are longer term. Protective devices include relayed circuit breakers, reclosers, sectionalizers, and fuses.

A *circuit breaker* is an electromagnetic device used to open and close a circuit. The operation of a circuit breaker can be automatic or manual. For overcurrent protection, relays are installed that sense the current and create a corresponding magnetic field whose force is used to trip the breaker if necessary. The trip characteristics of some circuit breakers are adjustable. An *instantaneous trip* is one that occurs without delay. An *inverse time trip* is one in which a delay is deliberately instituted. As the current magnitude increases, the time to trip decreases. The National Electrical Code®, 1999, specifies that a circuit breaker is considered to provide adequate short-circuit protection if its rating is no more than six times the ampacity of the conductors.

A *recloser* is a device that opens a circuit instantaneously when a fault occurs but recloses after a short period. Reclosers typically have a continuous current rating of 560 A and an interrupting capacity of 16,000 A or less. A circuit breaker will typically have a continuous current rating of 1200 A and an interrupting capacity of 40,000 A under short-circuit conditions. A recloser normally operates at twice its current rating. This is called the *minimum pickup current*. Reclosers are used to protect the distribution system while minimizing outages.

A *sectionalizer* is a device that counts the consecutive number of times a recloser operates and opens the circuit at a predetermined number of counts, usually two or three. The sectionalizer has no interrupting capacity. It operates to keep the recloser open during the time that the recloser is open.

A *fuse* is an expendable device that opens a circuit when the current becomes excessive. The fuse is a sealed container that contains a conductor surrounded by quartz-sand filler. The conductor melts after the current exceeds a given value. Though normally used for overload conditions, special types of fuses called *current-limiting fuses* are designed to melt nearly instantaneously. The National Electrical Code®, 1999, specifies that such fuses can be used as short-circuit protection if their rating does not exceed three times the ampacity of the conductors.

5. POLE LINES

The poles that support overhead electric utility lines are constructed of wood, concrete, steel, and aluminum. Poles are subject to *vertical loading* due to the weight of the conducting cable. Normal *transverse loading* occurs when a pole is located at a corner, that is, a point where the geographic direction of the conducting cable changes. Additional vertical and transverse forces must be accounted for due to *wind loading* and *ice loading*. This is accomplished by first calculating the forces using standard mechanical engineering techniques. Then the expected pressures on flat surfaces due to the wind is determined from

$$P = 71.43\mathrm{v}^2 \qquad 35.1$$

The term v represents the wind velocity normal to the flat surface in km/hr. The pressure is in units of Pa. For curved surfaces, such as a standard pole, the pressure is determined from

$$P = 44.64\mathrm{v}^2 \qquad 35.2$$

Finally, a percentage of this force is added to the result of the mechanical and wind calculations to increase the amount of force that the pole must be designed to withstand. (The force calculations become moment calculations when the pole height is taken into consideration).

HALLIBURTON EXHIBIT 1019
Halliburton Energy Services, Inc. v. U.S. Well Services, LLC, IPR2023-00557, Page 29

The percentage to be added is determined by the extreme wind and icing conditions expected in the area where the pole is to be located. The percentage may vary from 0.0 to 0.30.

Copper conductor used for overhead lines where spans are approximately 61 m (200 ft) or more is the hard-drawn type due to its greater strength. For shorter spans, medium hard-drawn or annealed copper is utilized. For very long spans, aluminum stranded around a steel core is used. This type of cable is called aluminum conductor steel-reinforced (ACSR). High-strength aluminum alloys are also used. One type is called aluminum conductor alloy-reinforced (ACAR). Another is the all-aluminum-alloy conductor (AAAC).

6. UNDERGROUND DISTRIBUTION

Underground installations have increased in popularity, especially in residential districts, primarily for aesthetic reasons, though there are indications that the frequency of faults is lower compared to overhead systems. When faults do occur, however, they are more difficult to access and repair. In a residential district, such a system is called an *underground residential distribution* (URD). Aluminum conductor is used almost exclusively for underground installations due to the development of synthetic insulation such as polyethylene.[3] In copper conductors, standard soft copper is used to improve flexibility. Unlike overhead lines, underground cables must be insulated to ensure the conductor does not contact ground or the cable's external sheath. The insulation also protects against mechanical, chemical, and other effects peculiar to an underground environment.

The insulating material surrounding a conductor is a dielectric. Figure 35.6(a) shows such an arrangement. The insulation thickness must be such that the electric field strength, E, at the surface of the conductor does not break down the insulation. If the cable is too large, it becomes difficult to handle and expensive. If the cable is too small, the dielectric loss becomes large, resulting in overheating of the cable. The optimal thickness is determined by the ratio in Eq. 35.3.

$$\frac{r_2}{r_1} = e = 2.718 \qquad 35.3$$

Figure 35.6(a) illustrates a cable with a single dielectric. When more than one dielectric is present, they are arranged to minimize the difference between the maximum and minimum electric field strength across the cable. This arrangement is known as *grading*. *Capacitance grading* is illustrated in Fig. 35.6(b). Given the restriction of a maximum electric field, $E_{\max}$, the operating voltage for a capacitance-graded cable is given by

$$V = E_{\max}\left(r_1 \ln\left(\frac{r_2}{r_1}\right) + r_2 \ln\left(\frac{r_3}{r_2}\right)\right) \qquad 35.4$$

[3]Aluminum conductor connections require special attention to ensure adequate contact and avoid corrosion.

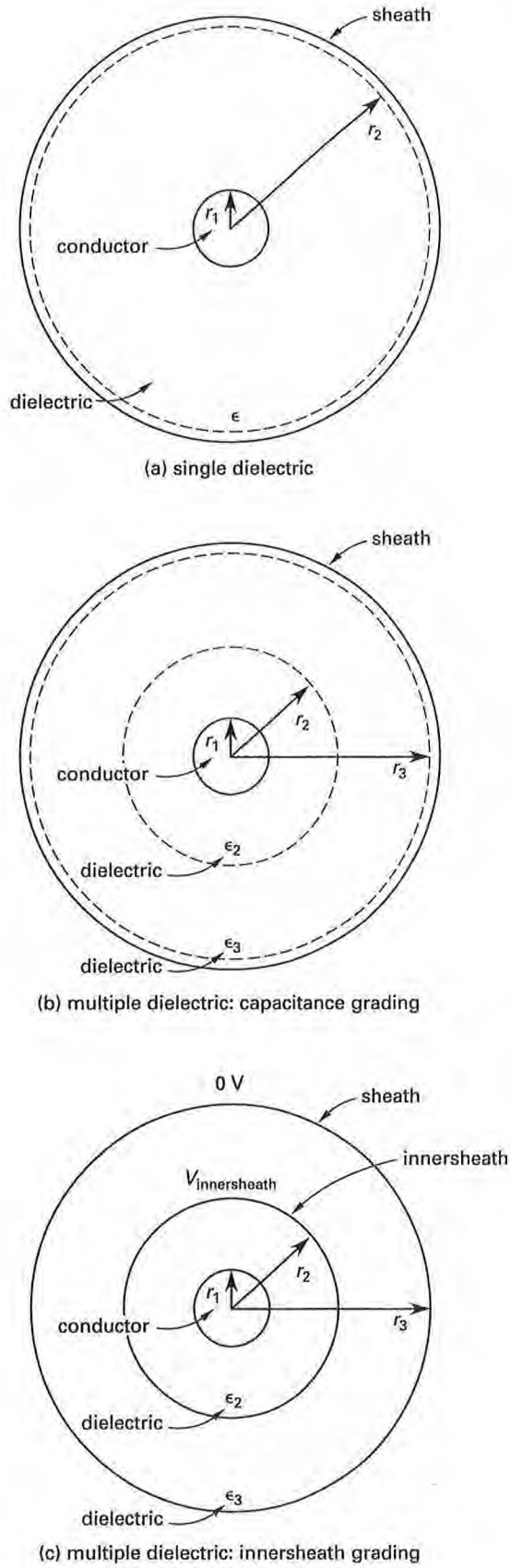

Figure 35.6 *Insulated Conductors*

Power–Transmission

HALLIBURTON EXHIBIT 1019
Halliburton Energy Services, Inc. v. U.S. Well Services, LLC, IPR2023-00557, Page 30

When the dielectric material is separated by coaxial metallic sheaths maintained at a constant voltage level, the grading is called *innersheath grading* (see Fig. 35.6(c)). The sheathing is used to minimize the electric field. Let the ratio of the radii be

$$\xi = \frac{r_3}{r_2} = \frac{r_2}{r_1} \qquad 35.5$$

The maximum electric field at the surface of the conductor is

$$E_{1,\max} = \frac{V - V_{\text{innersheath}}}{r_1 \ln\left(\frac{r_2}{r_1}\right)} = \frac{V - V_{\text{innersheath}}}{r_1 \ln \xi} \qquad 35.6$$

The maximum electric field at the surface of the innersheath is

$$E_{2,\max} = \frac{V_{\text{innersheath}}}{r_2 \ln\left(\frac{r_3}{r_2}\right)} = \frac{V_{\text{innersheath}}}{r_2 \ln \xi} \qquad 35.7$$

The permittivities are selected so that the maximum electric fields are the same. This condition results in the relationship given in Eq. 35.8 between the innersheath voltage and the operating voltage.

$$V_{\text{innersheath}} = \left(\frac{\xi}{1+\xi}\right) V \qquad 35.8$$

The capacitance per unit length, C_l, for a single-conductor cable is

$$C_l = \frac{Q}{V} = \frac{2\pi\varepsilon}{\ln \xi} \quad \text{[farads per meter]} \qquad 35.9$$

The inductance per unit length, L_l, for a single-conductor cable is

$$L_l = \frac{\mu_0}{2\pi} \ln \xi \quad \text{[Henries per meter]} \qquad 35.10$$

7. FAULT ANALYSIS: SYMMETRICAL

A *fault* is any defect in a circuit, such as an open circuit, short circuit, or ground. Short-circuit faults, called *shunt faults*, are shown in Fig. 35.7. Open-circuit faults are called *series faults*. Any fault that connects a circuit to ground is termed a *ground fault*. The balanced three-phase short circuit shown in Fig. 35.7(a) is the least likely, yet most severe, fault and thus determines the ratings of the supplying circuit breaker.

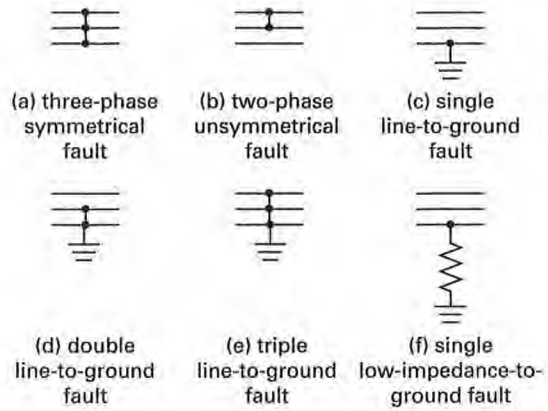

Figure 35.7 *Fault Types*

A three-phase *symmetrical fault*, such as that in Fig. 35.7(a), has three specific time periods of concern as shown in Fig. 35.8. During the *subtransient period*, which lasts only for a few cycles, the current rapidly decreases and the synchronous reactance, X_s, changes to the subtransient reactance, X''_d.[4] The model for a synchronous generator changes from that in Fig. 35.9(a) to that in 35.9(b). The sudden change in armature current results in a lower armature reactance, but the current through the leakage reactance must remain the same for continuity of energy. Thus, for proper modeling, it is necessary to change the voltage, E_g, to E''_g. The voltage E''_g is calculated for the subtransient interval *just prior to the initiation of the fault* using[5]

$$E''_g = V_t + jI_L X''_d \qquad 35.11$$

During the *transient period*, a similar situation exists and the model for the synchronous generator changes from that in Fig. 35.9(b) to that in 35.9(c). The correct generator voltage for this period is calculated *just prior to the initiation of the fault* using

$$E'_g = V_t + jI_L X'_d \qquad 35.12$$

Both E''_g and E'_g depend on the impedance of the load and the resulting current prior to fault initiation. Typical reactances of three-phase synchronous machines are given in Table 35.1. When a synchronous motor is part of a system, it is considered a synchronous generator for fault analysis.[6]

[4] There are actually two reactances: the *direct reactance* that lags the generator voltage by 90°, and a *quadrature reactance* (X_q) that is in phase with the generator voltage. During faults, the power factor is low and the quadrature reactance can be ignored.
[5] The general form for the synchronous generator voltage is $E''_g = V_t + jIX$.
[6] The motor actually becomes a generator when a fault occurs. The spinning motor changes the mechanical energy it possesses into electrical energy, supplying the fault and slowing in the process.

HALLIBURTON EXHIBIT 1019
Halliburton Energy Services, Inc. v. U.S. Well Services, LLC, IPR2023-00557, Page 31

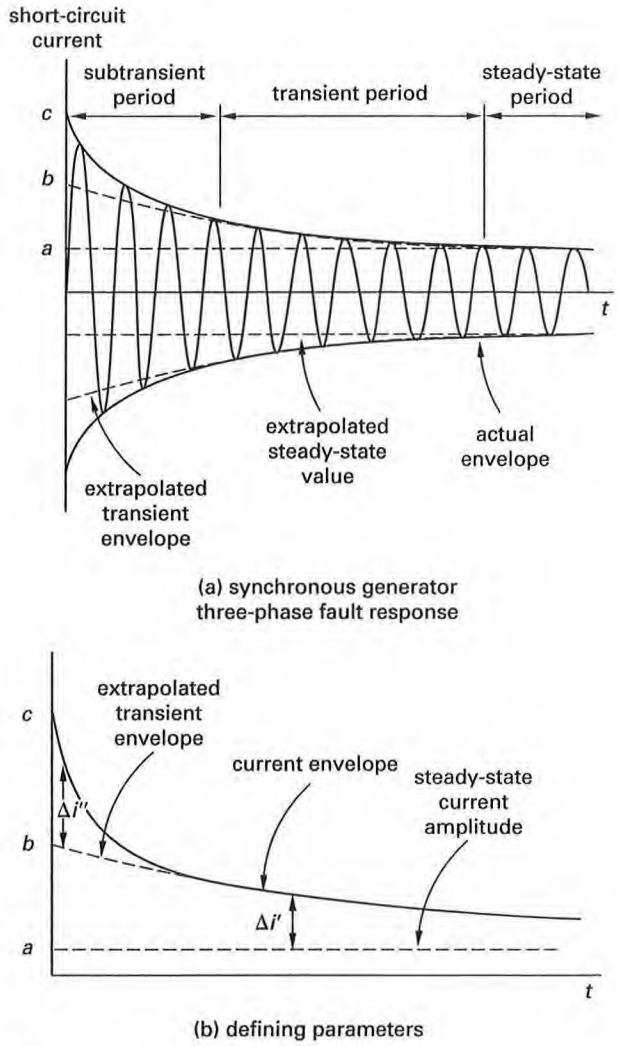

Figure 35.8 Symmetrical Fault Terminology

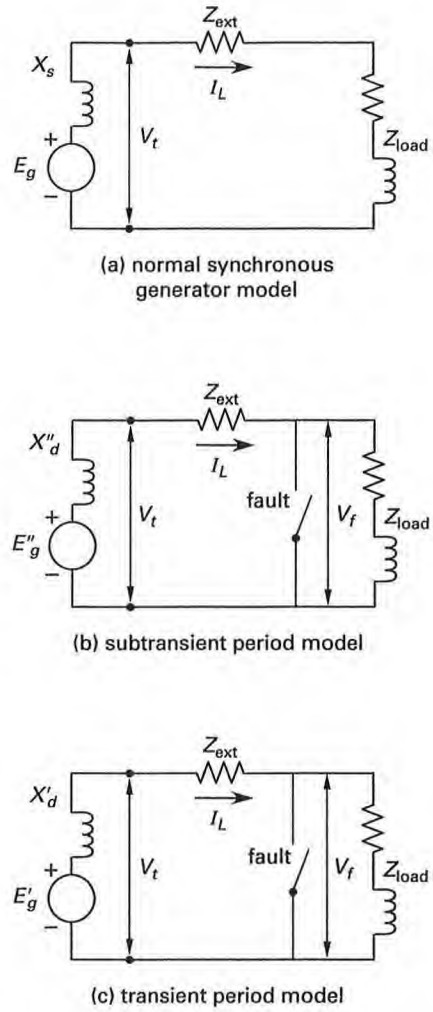

Figure 35.9 Synchronous Generator Fault Models

Table 35.1 *Typical Reactances of Three-Phase Synchronous Machines*
(Typical values are given above the bars. The ranges are given below the bars.)

	X_d (unsaturated)	X_q (rated current)	X'_d (rated voltage)	X''_d (rated voltage)
two-pole turbine generators	1.20 / 0.95–1.45	1.16 / 0.92–1.42	0.15 / 0.12–0.21	0.09 / 0.07–0.14
four-pole turbine generators	1.20 / 1.00–1.45	1.16 / 0.92–1.42	0.23 / 0.20–0.28	0.14 / 0.12–0.17
salient-pole generators and motors (with dampers)	1.25 / 0.60–1.50	0.70 / 0.40–0.80	0.30 [a] / 0.20–0.50	0.20 [a] / 0.13–0.32
salient-pole generators (without dampers)	1.25 / 0.60–1.50	0.70 / 0.40–0.80	0.30 [a] / 0.20–0.50	0.30 [a] / 0.20–0.50
capacitors (air-cooled)	1.85 / 1.25–2.20	1.15 / 0.95–1.30	0.40 / 0.36–0.50	0.27 / 0.19–0.30
capacitors (hydrogen-cooled at ½ psi)	2.20 / 1.50–2.65	1.35 / 1.10–1.55	0.48 / 0.36–0.60	0.32 / 0.23–0.36

[a] High-speed units tend to have low reactance, and low-speed units tend to have high reactance.

Used with permission from *Electrical Transmission and Distribution Reference Book*, by permission of the Westinghouse Electric Corporation.

Power–Transmission

HALLIBURTON EXHIBIT 1019
Halliburton Energy Services, Inc. v. U.S. Well Services, LLC, IPR2023-00557, Page 32

Circuit breakers must be able to interrupt fault currents at the rated voltage. The usual fault ratings are in kVA or MVA. The fault rating is the product of the interrupt current capacity and the line-to-line kV rating.

Example 35.1

A synchronous generator and motor are rated for 15 MVA, 13.9 kV, and 25% subtransient reactance. The line impedance connecting the generator and motor is $0.3 + j0.4$ pu, given with the ratings as the base. The motor is operating at 12 MVA, 13 kV, with a 0.8 pf lagging. Determine the per-unit equivalent generated voltage for the motor, $E''_{g,m}$, with the expectation of a fault at the motor terminals.

Solution

The one-line diagram illustrating the situation is

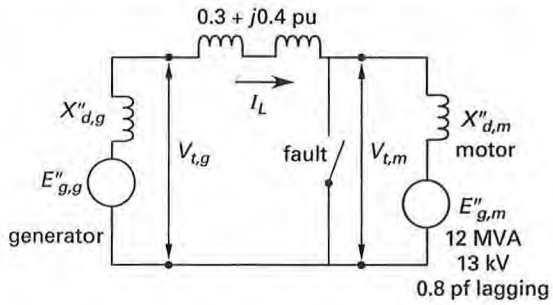

Determine the base quantities for this three-phase system.

$$S_{\text{base}} = S_t = 15 \text{ MVA}$$

$$V_{\text{base}} = V_l = 13.9 \text{ kV}$$

$$I_{\text{base}} = \frac{S_{\text{base}}}{\sqrt{3}V_{\text{base}}} = \frac{15 \text{ MVA}}{\sqrt{3}(13.9 \text{ kV})} = 0.62 \text{ kA}$$

$$Z_{\text{base}} = \frac{V_{\text{base}}}{I_{\text{base}}} = \frac{13.9 \text{ kV}}{0.62 \text{ kA}} = 22.4\ \Omega$$

Determine the per-unit quantities of interest, that is, the voltage at the fault site (the terminals of the motor), and the current flowing.

$$V_{\text{pu}} = \frac{V_{\text{actual}}}{V_{\text{base}}} = \frac{13 \text{ kV}}{13.9 \text{ kV}} = 0.935 \text{ pu}$$

$$I_{\text{pu}} = \frac{I_{\text{actual}}}{I_{\text{base}}} = \frac{\dfrac{12 \text{ MVA}}{\sqrt{3}(13 \text{ kV})}}{0.62 \text{ kA}} = 0.860 \text{ pu}$$

The power factor is 0.8 lagging, thus

$$\text{lagging pf} = -\cos\theta = -0.8$$

$$\theta = -\cos^{-1} 0.8 = -36.9^\circ$$

The line current, I_l, is

$$I_l = I_{\text{pu}}\angle\theta = 0.860 \text{ pu}\angle{-36.9^\circ}$$

$$= 0.688 - j0.516 \text{ pu}$$

The equivalent generated voltage for the motor can now be found. Writing the equation for the voltage from the motor terminals to the motor armature gives

$$E''_{g,m} = V_{t,m} - jX''_d I_l$$

$$= 0.935 - j\,(0.25)\,(0.688 - j0.516)$$

$$= 0.806 - j0.172$$

$$= 0.824\angle{-12^\circ} \text{ pu}$$

Example 35.2

Determine the per-unit equivalent generated voltage for the generator, $E''_{g,g}$, for the system in Ex. 35.1.

Solution

The motor terminal voltage is known and the line current is known. An equation for the equivalent generated voltage, written from the known quantities at the motor terminals, is

$$E''_{g,g} = V_{t,m} + I_l Z$$

The impedance is from the motor terminals back to the generator, which is the only unknown. Thus,

$$Z = Z_l + Z_g$$

$$= (0.3 + j0.4) + j0.25$$

$$= 0.3 + j0.65$$

$$= 0.715\angle 65^\circ \text{ pu}$$

Substituting gives

$$E''_{g,g} = V_{t,m} + I_l Z$$

$$= 0.935 + (0.860\angle{-36.9^\circ})\,(0.715\angle 65^\circ)$$

$$= 1.5\angle 11.1^\circ \text{ pu}$$

Example 35.3

Determine the per-unit subtransient period current for the motor in Ex. 35.1.

Solution

A fault at the motor terminals results in a current given by

$$I_m = \frac{E''_{g,m}}{jX''_d} = \frac{0.824\angle{-12^\circ}}{0.25\angle 90^\circ} = 3.3\angle{-102^\circ} \text{ pu}$$

HALLIBURTON EXHIBIT 1019
Halliburton Energy Services, Inc. v. U.S. Well Services, LLC, IPR2023-00557, Page 33

Example 35.4

Determine the per-unit subtransient period current for the generator in Ex. 35.1.

Solution

The generator current that flows to the fault is given by

$$I_g = \frac{E''_{g,g}}{Z} = \frac{1.5\angle 11.1^\circ}{0.715\angle 65^\circ} = 2.09\angle -53.9^\circ \text{ pu}$$

Example 35.5

What is the actual fault current for the circuit in Ex. 35.1?

Solution

The actual fault current is the total current through the fault from the generator and the motor. The synchronous motor acts as a generator to the fault as it gradually loses speed. The subtransient period is too short for the motor to lose a significant amount of speed. Thus, it can be treated as a generator. The total current is

$$\begin{aligned} I &= I_m + I_g \\ &= 3.3\angle -102^\circ \text{ pu} + 2.09\angle -53.9^\circ \text{ pu} \\ &= 4.95\angle -83.7^\circ \text{ pu} \end{aligned}$$

The actual current is

$$\begin{aligned} I_{\text{actual}} &= I_{\text{pu}} I_{\text{base}} \\ &= (4.95\angle -83.7)\,(0.62 \text{ kA}) \\ &= 3.07\angle -83.7^\circ \text{ kA} \end{aligned}$$

Example 35.6

Determine the minimum rating necessary for the motor and generator circuitbreakers to protect against this fault.

Solution

The minimum rating is determined by the per-unit current drawn during the fault and the base apparent power, that is, the base VA. In other words, the rating is the base apparent power (VA_{base}) multiplied by a factor representing the current flowing above the base current.

$$\text{VA rating} = I_{\text{pu,fault}} \text{VA}_{\text{base}}$$

For the motor circuitbreaker,

$$\begin{aligned} \text{VA rating} &= I_{\text{pu,fault}} \text{VA}_{\text{base}} \\ &= (3.3)\,(15 \text{ MVA}) \\ &= 49.5 \text{ MVA} \end{aligned}$$

For the generator circuitbreaker,

$$\begin{aligned} \text{VA rating} &= I_{\text{pu,fault}} \text{VA}_{\text{base}} \\ &= (2.09)\,(15 \text{ MVA}) \\ &= 31.4 \text{ MVA} \end{aligned}$$

8. FAULT ANALYSIS: UNSYMMETRICAL

Unsymmetrical faults, also called *asymmetrical faults*, are any faults other than a three-phase short. Examples include the line-to-line and line-to-ground faults shown in Figs. 35.7(b) through 35.7(f). Such faults are more common than three-phase shorts, but they are more difficult to analyze because they result in uneven phase voltages and currents. Nevertheless, unsymmetrical faults can be analyzed by separating unbalanced phasor components into three sets of symmetrical components as shown in Fig. 35.10.

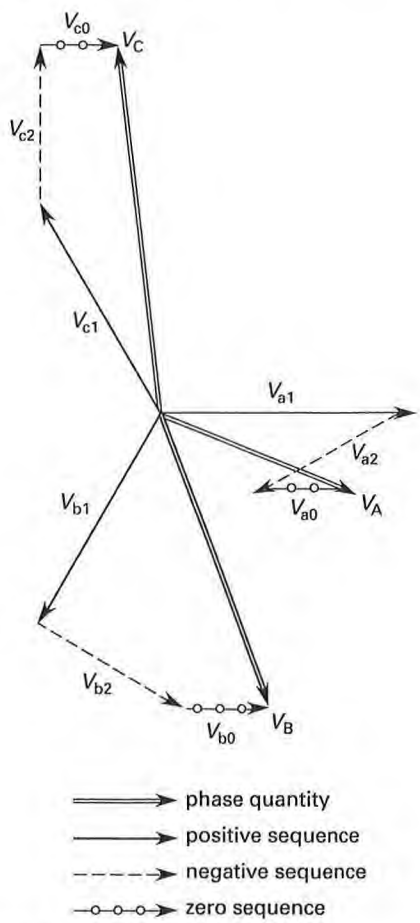

Figure 35.10 *Phasor Diagram: Symmetrical Components of Unbalanced Phasors*

The three sets of symmetrical components shown in Fig. 35.10 are referred to as the *positive-sequence*, *negative-sequence*, and *zero-sequence* components of the

Power–Transmission

HALLIBURTON EXHIBIT 1019
Halliburton Energy Services, Inc. v. U.S. Well Services, LLC, IPR2023-00557, Page 34

unsymmetrical phasors. The positive-sequence phasors, shown again in Fig. 35.11(a), are three equal-magnitude phasors rotating counterclockwise in sequence a, b, c. Positive-sequence phasors are 120 electrical degrees apart and sum to zero. Positive-sequence components are the ones normally used in electrical engineering. Such components represent balanced three-phase generators, motors, and transformers. The subscript 1 is normally used to indicate the positive sequence.

The negative-sequence phasors, shown again in Fig. 35.11(b), are three equal-magnitude phasors rotating counterclockwise in sequence a, c, b. They can also be represented as a mirror image of the positive-sequence phasors rotating in the clockwise direction. Negative-sequence phasors are 120 electrical degrees apart and sum to zero. The negative-sequence reactance is the average of the subtransient direct and quadrature reactances, as given in Eq. 35.13. The subscript 2 is normally used to indicate the negative sequence.

$$X_2 = \frac{1}{2}\left(X''_d + X''_q\right) \qquad 35.13$$

The zero-sequence phasors, shown again in Fig. 35.11(c), are three equal-magnitude phasors coincident in phase sequence and rotating counterclockwise. The subscript 0 is normally used to indicate the zero sequence.

The unsymmetrical phasors of Fig. 35.10 are represented in terms of their symmetrical components by the following equations.

$$V_{\mathrm{A}} = V_{\mathrm{a0}} + V_{\mathrm{a1}} + V_{\mathrm{a2}} \qquad 35.14$$

$$V_{\mathrm{B}} = V_{\mathrm{b0}} + V_{\mathrm{b1}} + V_{\mathrm{b2}} \qquad 35.15$$

$$V_{\mathrm{C}} = V_{\mathrm{c0}} + V_{\mathrm{c1}} + V_{\mathrm{c2}} \qquad 35.16$$

Consider an operator **a** defined as a unit vector with a magnitude of one and an angle of 120°, $1\angle 120°$. (This is similar to the operator **j** of $1\angle 90°$.) The properties of such an operator are[7]

$$\begin{aligned} \mathrm{a} &= 1\angle 120° = 1 \times e^{j120°} \\ &= -0.5 + j0.866 \end{aligned} \qquad 35.17$$

$$\mathrm{a}^2 = 1\angle 240° = -0.5 - j0.866 = \mathrm{a}^* \qquad 35.18$$

$$\mathrm{a}^3 = 1\angle 360° = 1\angle 0° \qquad 35.19$$

$$\mathrm{a}^4 = \mathrm{a} \qquad 35.20$$

$$\mathrm{a}^5 = \mathrm{a}^2 \qquad 35.21$$

$$\mathrm{a}^6 = \mathrm{a}^3 \qquad 35.22$$

$$1 + \mathrm{a} + \mathrm{a}^2 = 0 \qquad 35.23$$

[7] Just as **j** is not normally written in vector notation, the operator **a** is normally written as "a."

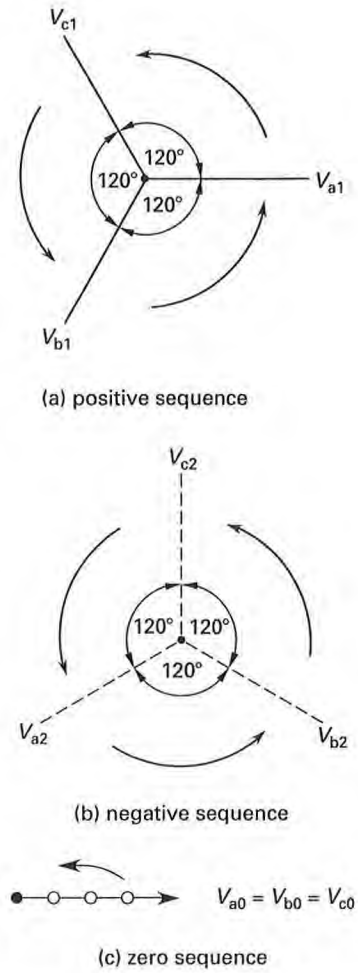

Figure 35.11 *Components of Unsymmetrical Phasors*

Using Eqs. 35.14 through 35.16 and the concept of the phasor **a**, the unsymmetrical components can be represented in terms of a single phase. For example, using phase A gives

$$V_{\mathrm{A}} = V_{\mathrm{a0}} + V_{\mathrm{a1}} + V_{\mathrm{a2}} \qquad 35.24$$

$$V_{\mathrm{B}} = V_{\mathrm{a0}} + \mathrm{a}^2 V_{\mathrm{a1}} + \mathrm{a} V_{\mathrm{a2}} \qquad 35.25$$

$$V_{\mathrm{C}} = V_{\mathrm{a0}} + \mathrm{a} V_{\mathrm{a1}} + \mathrm{a}^2 V_{\mathrm{a2}} \qquad 35.26$$

Solving for the sequence components from Eqs. 35.24 through 35.26 gives

$$V_{\mathrm{a0}} = \frac{1}{3}\left(V_{\mathrm{A}} + V_{\mathrm{B}} + V_{\mathrm{C}}\right) \qquad 35.27$$

$$V_{\mathrm{a1}} = \frac{1}{3}\left(V_{\mathrm{A}} + aV_{\mathrm{B}} + a^2 V_{\mathrm{C}}\right) \qquad 35.28$$

$$V_{\mathrm{a2}} = \frac{1}{3}\left(V_{\mathrm{A}} + a^2 V_{\mathrm{B}} + aV_{\mathrm{C}}\right) \qquad 35.29$$

HALLIBURTON EXHIBIT 1019
Halliburton Energy Services, Inc. v. U.S. Well Services, LLC, IPR2023-00557, Page 35

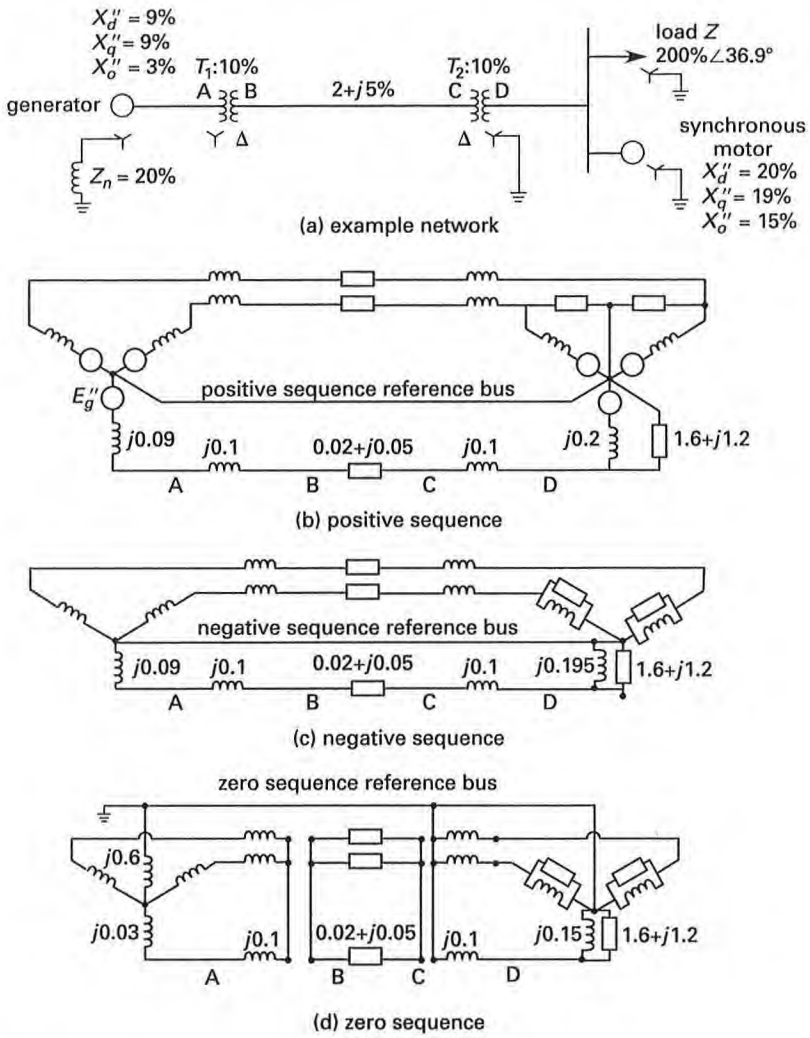

Figure 35.12 *Sample Sequence Networks*

Equations similar to Eqs. 35.24 through 35.29 exist for currents as well. Thus, sequence impedances may also be defined. Impedance through which only positive-sequence currents flow is called a *positive-sequence impedance.* Positive-sequence networks are normally used in electrical engineering and an example is given in Fig. 35.12(b). *Negative-sequence impedance* is similar to positive-sequence impedance with the reactance given by Eq. 35.13. In addition, a negative-sequence network omits all positive-sequence generators. A sample negative-sequence network is shown in Fig. 35.12(c). *Zero-sequence impedance* is significantly different from positive-sequence impedance. The only machine impedance seen by the zero-sequence impedance is the leakage reactance, X_0. Series reactance is greater than positive-sequence reactance by a factor of 2 to 3.5. A sample zero-sequence network is shown in Fig. 35.12(d). Only a wye-connected load with a grounded neutral permits zero-sequence currents. Only a delta-connected transformer secondary permits zero-sequence currents. Figure 35.13 shows zero-sequence impedances for various configurations. The use of sequence networks simplifies fault calculations.

Power-Transmission

HALLIBURTON EXHIBIT 1019
Halliburton Energy Services, Inc. v. U.S. Well Services, LLC, IPR2023-00557, Page 36

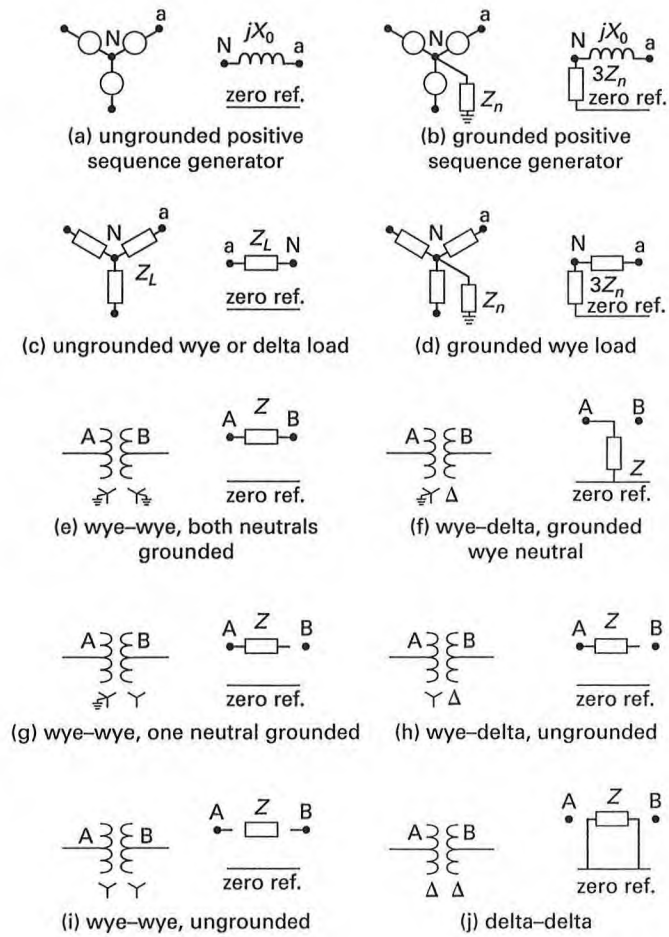

Figure 35.13 *Zero Sequence Impedances*

HALLIBURTON EXHIBIT 1019
Halliburton Energy Services, Inc. v. U.S. Well Services, LLC, IPR2023-00557, Page 37

37 Power Transmission Lines

1. Fundamentals 37-2
2. DC Resistance 37-3
3. Skin Effect 37-4
4. AC Resistance 37-4
5. Internal Inductance 37-5
6. External Inductance 37-5
7. Single-Phase Inductance 37-6
8. Single-Phase Capacitance 37-6
9. Three-Phase Transmission 37-7
10. Power Transmission Lines 37-8
11. Transmission Line Representation 37-8
12. Short Transmission Lines 37-9
13. Medium-Length Transmission Lines 37-11
14. Long Transmission Lines 37-11
15. Reflection Coefficient 37-12

Nomenclature

a	phase	–
A	ABCD parameter	–
A	area	m^2
b	phase	–
B	ABCD parameter	–
B	susceptance	S, Ω^{-1}, or ℧
c	phase	–
c	speed of light	3.00×10^8 m/s
C	ABCD parameter	–
C	capacitance	F
D	ABCD parameter	–
D	distance	m
f	frequency	Hz, s^{-1}, or cycles/s
G	conductance	S, Ω^{-1}, or ℧
GMD	geometric mean distance	m
GMR	geometric mean radius	m
I	effective or DC current	A
I	rms phasor current	A
K	skin effect ratio	–
K	correction factor	–
l	length	m
L	inductance	H
M	mutual inductance	H
P	power	W
r	radius	m
R	resistance	Ω
SWR	standing wave ratio	–
T	temperature	°C or K
v	velocity (speed)	m/s
V	effective or DC voltage	V
V	rms phasor voltage	V
x	variable	–
X	reactance	Ω
y	admittance per unit length	S/m, 1/Ω·m, or ℧/m
Y	admittance	S, Ω^{-1}, or ℧
z	impedance per unit length	Ω/m
Z	impedance	Ω
Z_0	characteristic impedance	Ω

Symbols

α	attenuation constant	Np/m
α	thermal coefficient of resistance	1/°C
β	phase constant	rad/m
γ	propagation constant	rad/m
Γ	reflection coefficient	–
δ	skin depth	m
Δ	change, final to initial	–
ε	permittivity	F/m
ε_0	free-space permittivity	8.854×10^{-12} F/m
ε_r	relative permittivity	–
η	efficiency	–
θ	phase angle	rad
μ	permeability	H/m
μ_0	free-space permeability	1.2566×10^{-6} H/m
μ_r	relative permeability	–
ρ	resistivity	Ω·m
σ	conductivity	S/m

Subscripts

0	initial
0	free space (vacuum)
0	characteristic
ab	a to b
AC	alternating current
bc	b to c
c a	c to a
C	capacitor
Cu	copper
DC	direct current
e	equivalent
eff	effective
ext	external
fl	full load
int	internal
l	per unit length
ll	line-to-line
L	inductor

Power–Transmission

HALLIBURTON EXHIBIT 1019

Halliburton Energy Services, Inc. v. U.S. Well Services, LLC, IPR2023-00557, Page 38

m	mutual
nl	no load
R	receiving end
R	resistance
S	sending end
w	wave

1. FUNDAMENTALS

A *transmission line* is a system of conductors, such as wires, waveguides, or coaxial cables, that conducts power or transmits signals from one terminal to another.[1] Specifically, a transmission line guides *transverse electromagnetic waves* (TEM). In transverse electromagnetic waves, the electric and magnetic fields are perpendicular to the direction of propagation. At low frequencies, where the dimensions of the line are small compared to the wavelength, lumped parameters provide an adequate model of the circuit.[2] This is because the displacement current is small and can be ignored. That is, the storage of electromagnetic energy in the space surrounding the line can be ignored. At high frequencies, the dimensions of the line are large compared to the wavelengths propagated. The displacement current becomes significant. That is, electric and magnetic energy is stored in the space surrounding the line (see Chs. 24 and 25).

To avoid using field theory to analyze transmission lines, distributed parameters are used along with currents and voltages associated with the electric and magnetic fields. *Distributed parameters* are circuit elements that exist along the entire line but are represented per unit length, which allows the use of common electrical analytic techniques. A transmission line represented by distributed parameters is illustrated in Fig. 37.1.

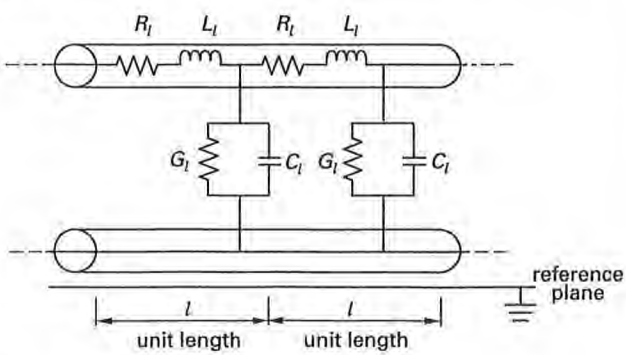

Figure 37.1 *Distributed Parameters*

[1]The transmission of signals is normally considered a communications function. Communications systems thus use transmission lines as well. The lines tend to be high frequency with different properties than power transmission lines. Waveguides are used in high-frequency transmission when the wavelength is less than 10 cm. High-frequency transmission lines are covered in the Communications topic of this book, Chs. 56 through 61.

[2]Lumped parameters are single-valued circuit elements that are equivalent to the value in the circuit as a whole, such as a resistor, inductor, or capacitor in a specific position in the circuit that accounts for the line electrical properties as well.

The distributed parameters in Fig. 37.1 are the resistance per unit length, R_l, inductance per unit length, L_l, capacitance per unit length, C_l, and *shunt conductance* per unit length, G_l. The resistance depends on the frequency because of a phenomenon known as the *skin effect*: as frequency rises, current flows closer to the surface of the conductor, thus raising the resistance. (The AC resistance at 60 Hz is 5 to 10% higher than the DC resistance.) The *temperature effect* on resistance must also be accounted for in transmission line design. The inductance consists of two terms, the internal inductance, L_{int}, and the external inductance, L_{ext}. The internal inductance depends on the skin effect, decreasing as the frequency increases. The external inductance depends on the geometric arrangement of the conductors. The capacitance also depends on the geometric arrangement of the conductors. The shunt conductance, also called the *line-to-line conductance*, is usually insignificant.

Additional parameters of concern include the characteristic impedance, the standing wave ratio, and the reflection coefficient.[3] The *characteristic impedance* is determined by

$$Z_0 = \sqrt{\frac{Z_l}{Y_l}} \quad [\text{in } \Omega] \qquad 37.1$$

If the transmission line is terminated with the characteristic impedance, no power is reflected back to the source. If the termination impedance is other than Z_0, then the power (signal) from the generator (source) will be partially reflected back to the generator. In wave terminology, the generator's waves will then combine in the transmission line with the reflected waves to form *standing waves*. The *standing wave ratio*, SWR, is the ratio of the maximum to the minimum voltages (currents) encountered along the transmission line. Typically, the SWR is greater than unity. If the terminating impedance matches the characteristic impedance, all the input power provided by the generator will be absorbed by the load and the SWR will equal one. The standing wave ratios are given by

$$\begin{aligned} \text{SWR} &= \text{VSWR} = \text{CSWR} \\ &= \max \begin{cases} Z_{\text{load}}/Z_0 \\ Z_0/Z_{\text{load}} \end{cases} \end{aligned} \qquad 37.2$$

The *reflection coefficient*, Γ, is the ratio of the reflected voltage (current) to the incident voltage (current). The reflection coefficient is given by

$$\begin{aligned} \Gamma &= \frac{V_{\text{reflected}}}{V_{\text{incident}}} = \frac{I_{\text{reflected}}}{I_{\text{incident}}} \\ &= \left| \frac{Z_{\text{load}} - Z_0}{Z_{\text{load}} + Z_0} \right| \end{aligned} \qquad 37.3$$

[3]The Smith chart is a convenient way to analyze these three parameters for low-loss lines and high-frequency lines.

HALLIBURTON EXHIBIT 1019
Halliburton Energy Services, Inc. v. U.S. Well Services, LLC, IPR2023-00557, Page 39

The fraction of incident power that is reflected back to the source from the load is Γ^2. The relationship between the reflection coefficient and the standing wave ratio is given by Eq. 37.4.

$$\Gamma = \frac{\text{SWR} - 1}{\text{SWR} + 1} \qquad 37.4$$

The *velocity of propagation*, v_w, is the velocity at which a wave propagates along a transmission line and is given by

$$v_w = \frac{1}{\sqrt{L_l C_l}} \qquad 37.5$$

Transmission lines are considered in three lengths.[4] The *short transmission line* is from 0 to 80 km (0 to 50 mi). In a short line, the shunt parameters, G_l and C_l, are insignificant and ignored in the analysis. The *medium transmission line* is from 80 to 240 km (50 to 150 mi). In a medium line, the shunt capacitances are generally lumped in predetermined locations along the line. The *long transmission line* is greater than 240 km (150 mi). A long transmission line is also called a *uniform transmission line* since it has constant distributed parameters along the line from the sending end to the receiving end.

Many transmission line characteristics and formulas are tabulated in English Engineering System units. For this reason, a mixture of metric and English Engineering System units is utilized in this chapter. Additionally, all AC quantities have a magnitude and an angle. However, as is common practice, these items will be shown in phasor notation, or complex notation, only when possible confusion could occur.[5]

2. DC RESISTANCE

Resistance generates the I^2R power loss in transmission lines. Additionally, the IR drop, or voltage drop, affects the voltage regulation. The DC resistance, often called the *characteristic resistance*, R_0, of a conductor of length l, cross-sectional area A, and resistivity ρ is normally given as $\rho l/\text{A}$. Since the distributed parameters are given as per-unit-length quantities, the DC resistance per unit length is

$$R_{l,\text{DC}} = R_0 = \frac{\rho}{A} \quad [\text{in } \Omega/\text{m}] \qquad 37.6$$

The resistance sensitivity to temperature is calculated from

$$R_{\text{final}} = R_{\text{initial}}\,(1 + \alpha\Delta T) \qquad 37.7$$

[4]The distances given assume a 60 Hz signal. The engineering methods in each type of transmission line differ. As the frequency increases, the distances of each definition decrease, with the concurrent adjustment in the engineering method used.

[5]Phasor or complex notation usually presents the parameter in bold or with an arrow over the top (**V** or $\vec{V}$).

Voltage drops are often tabulated for various conductor sizes as shown in Table 37.1.

Table 37.1 *Voltage Drop in Two-Wire DC Circuits (Loop)*[a]

conductor size (AWG)		
copper	approximately equivalent aluminum	voltage drop per 100,000 A·m
6	4	31.3
4	2	19.7
2	1/0	12.4
1/0	3/0	7.80
2/0	4/0	6.19

[a]Values are calculated for 32°C (90°F) conductors.

Example 37.1

A 50 kW DC device is located 1.6 km from a motor-generator with a maximum output voltage of 600 V_{DC}. If the lowest voltage the DC device can properly utilize is 575 V, what is the minimum conductor size required?

Solution

The maximum allowable voltage drop is 25 V. To use Table 37.1, the total ampere-meters for this system is required. The maximum current is given by

$$P = IV$$

$$I = \frac{P}{V} = \frac{50 \times 10^3 \text{ W}}{575 \text{ V}} = 86.96 \text{ A}$$

The total cable distance to reach the site and provide the return path to the generator is

$$D = (2)(1.6 \times 10^3 \text{ m}) = 3.2 \times 10^3 \text{ m}$$

The total A·m is

$$(86.96 \text{ A})(3.2 \times 10^3 \text{ m}) = 278.27 \times 10^3 \text{ A·m}$$

The voltage drop entry point for the table, x, is

$$\begin{aligned} \text{allowable voltage drop} &= (\text{A·m}_{\text{total}}) \times \left(\frac{\text{voltage drop}}{100{,}000 \text{ A·m}}\right) \\ 25 \text{ V} &= (278.27 \times 10^3 \text{ A·m}) \times \left(\frac{x}{100{,}000 \text{ A·m}}\right) \\ x &= 8.98 \text{ V} \end{aligned}$$

From Table 37.1, the conductor size with an 8.98 voltage drop, or less, is 1/0 for copper or 3/0 for aluminum.

Power–Transmission

HALLIBURTON EXHIBIT 1019
Halliburton Energy Services, Inc. v. U.S. Well Services, LLC, IPR2023-00557, Page 40

3. SKIN EFFECT

The *skin effect* is the tendency of AC currents to flow near the surface of a conductor. This results in the AC current being restricted to less than the total cross-sectional area of the conductor, resulting in an increased resistance and a decreased internal inductance. The skin effect can be thought of as an electromagnetic phenomenon related to the time required for an external field to penetrate a conductor.[6] It occurs because the surface reactance is smaller than the reactance of other possible current paths within the conductor. The *skin depth*, δ, is the depth beneath the surface of the conductor that is carrying the current at a given frequency due to electromagnetic waves incident to the surface.[7] Specifically, it is the depth at which the current density is $1/e$, the value of the surface current density. The skin depth for a flat conducting plate is

$$\delta = \frac{1}{\sqrt{\frac{\pi f \mu}{\rho}}} = \frac{1}{\sqrt{\pi f \mu \sigma}} \qquad 37.8$$

The AC resistance per unit length for a flat conducting plate of unit width w is

$$R_{l,\mathrm{AC}} = \frac{\rho}{\delta w} \quad [\text{in } \Omega/\text{m}] \qquad 37.9$$

Conductors are normally round. Equation 37.9 would be applicable only if the skin depth were much less than the radius, r, so that the wire approximated a flat surface. For example, a ratio of $r/\delta > 5.5$ results in less than a 10% error. The actual skin depth for copper conductors is

$$\delta_{\mathrm{Cu}} = \frac{0.066}{\sqrt{f}} \quad [\text{in m}] \qquad 37.10$$

Example 37.2

Determine the copper wire radius in mils where the skin depth equals the radius for the following frequencies: 60 Hz, 10 kHz, 1 MHz.

Solution

First, convert Eq. 37.10 into an equivalent equation based on mils rather than meters.

$$\delta_{\mathrm{Cu}} = \left(\frac{0.066}{\sqrt{f}}\right)\left(\frac{1 \text{ mil}}{0.001 \text{ in}}\right)\left(\frac{1 \text{ in}}{2.54 \text{ cm}}\right)\left(\frac{100 \text{ cm}}{1 \text{ m}}\right)$$
$$= \frac{2.60 \times 10^3}{\sqrt{f}} \text{ mil}$$

Substitute the given frequencies to determine the skin depth.

$$\delta_{\mathrm{Cu}} = \frac{2.60 \times 10^3}{\sqrt{f}} \text{ mil} = \frac{2.60 \times 10^3}{\sqrt{60 \text{ s}^{-1}}} \text{ mil} = 336 \text{ mil}$$

$$\delta_{\mathrm{Cu}} = \frac{2.60 \times 10^3}{\sqrt{f}} \text{ mil} = \frac{2.60 \times 10^3}{\sqrt{10 \times 10^3 \text{ s}^{-1}}} \text{ mil} = 26 \text{ mil}$$

$$\delta_{\mathrm{Cu}} = \frac{2.60 \times 10^3}{\sqrt{f}} \text{ mil} = \frac{2.60 \times 10^3}{\sqrt{1 \times 10^6 \text{ s}^{-1}}} \text{ mil} = 2.6 \text{ mil}$$

The largest solid copper wire is AWG 4/0, that is, AWG 0000.[8] The radius is 230 mil, so the diameter is 460 mil. This indicates that at 60 Hz the electromagnetic wave does not completely penetrate the conductor. That is, some skin effect is occurring, as the skin depth is less than the diameter. By contrast, AWG 1/0 has a diameter of approximately 330 mil and would be completely penetrated by a 60 Hz wave. Thus, skin effect occurs at 60 Hz but only for the largest conductors, such as those used for commercial power applications. For most other applications, the 10 kHz frequency mark is often used as the point where skin effect must be accounted for and AC resistance calculated.

4. AC RESISTANCE

Skin effect and the resulting increase in resistance and decrease in internal inductance are often neglected in initial calculations or approximations. In the case of large copper wires at commercial power frequencies, exact calculations must consider the effect.[9] The effect on aluminum conductors is less because aluminum has a higher resistivity. Tables of skin effect ratios are available when the exact value of the AC resistance is required.[10] Table 37.2 gives sample ratios. The skin effect ratio for the AC resistance, K_R, is used to determine the effective resistance from

$$R_{\mathrm{AC}} = K_R R_{\mathrm{DC}} \qquad 37.11$$

[6] It is this principle that allows metal shielding to be used to prevent electromagnetic wave penetration of equipment. Conversely, such shielding also prevents the escape of radiated electromagnetic waves.

[7] In generators, the armature current is induced from an electromagnetic wave incident to the surface. Thus, this principle applies for generators and any conductor cabling attached to the generator.

[8] Any larger size consists of stranded conductors.

[9] The effect should be accounted for at communications system frequencies as well.

[10] Skin effect ratios are also called *AC/DC resistance ratios*.

HALLIBURTON EXHIBIT 1019
Halliburton Energy Services, Inc. v. U.S. Well Services, LLC, IPR2023-00557, Page 41

The table is entered using a value of x determined from

$$x = 2\pi r\sqrt{\frac{2f\mu}{\rho}} = \frac{2r\sqrt{2\pi}}{\delta} \qquad 37.12$$

Table 37.2 *Skin Effect Ratios*

x	K_R[a]	$K_{L,\text{int}}$[b]
0.0	1.00000	1.00000
0.5	1.00032	0.99984
1.0	1.00519	0.99741
2.0	1.07816	0.96113
4.0	1.67787	0.68632
8.0	3.09445	0.35107
16.0	5.91509	0.17649
32.0	11.56785	0.08835
50.0	17.93032	0.05656
100.0	35.60666	0.02828
∞	∞	0

[a] K_R is the skin effect ratio for AC resistance.
[b] $K_{L,\text{int}}$ is the skin effect ratio for internal inductance.

The use of tables is the most accurate practical method of determining the AC resistance. Curves normalized to the DC resistance are sometimes used for intermediate frequencies. The AC resistance can also be found by calculating the effective area of the conductor, that is, the area actually conducting current, and comparing this area to that used by the DC resistance. The DC resistance is given by Eq. 37.6 as ρ/A. Since the resistivity doesn't change, comparing an AC resistance to a DC resistance on the same wire gives

$$\frac{R_{l,\text{AC}}}{R_{l,\text{DC}}} = \frac{A}{A_{\text{eff}}} \qquad 37.13$$

The effective area is

$$A_{\text{eff}} = \pi r^2 - \pi(r-\delta)^2 \qquad 37.14$$

Example 37.3

An AWG #20 copper conductor has a diameter of 32 mil with a DC resistance of approximately 33 Ω/km at 25°C. Calculate the resistance per kilometer at 10 kHz with no temperature change.

Solution

Equation 37.13 contains the relationship desired. The skin depth, δ, from Ex. 37.2 is 26 mil. The radius is 16 mil. Rearranging Eq. 37.13 and substituting Eq. 37.14 gives

$$\begin{aligned}
R_{l,\text{AC}} &= R_{l,\text{DC}}\left(\frac{A}{A_{\text{eff}}}\right) \\
&= R_{l,\text{DC}}\left(\frac{\pi r^2}{\pi r^2 - \pi(r-\delta)^2}\right) \\
&= R_{l,\text{DC}}\left(\frac{\pi r^2}{\pi r^2\left(1-\left(1-\frac{\delta}{r}\right)^2\right)}\right) \\
&= \left(33\ \frac{\Omega}{\text{km}}\right)\left(\frac{1}{1-\left(1-\frac{26\text{ mil}}{16\text{ mil}}\right)^2}\right) \\
&= 54\ \Omega/\text{km}
\end{aligned}$$

5. INTERNAL INDUCTANCE

The *internal inductance*, also called the *characteristic inductance*, is that inductance associated with the interior of a solid conductor. That is, the fluxes in the space surrounding the conductor are disregarded. For nonmagnetic materials, the relative permeability, μ_r, is approximately one. Thus, the magnetic permeability of a conductor is approximately that of free space, that is, $\mu \approx \mu_0$. The internal inductance per unit length for a conductor is given by

$$L_{l,\text{int}} = \frac{\mu_0}{8\pi} = 0.5\times10^{-7}\ \text{H/m} \qquad 37.15$$

For a single-phase system, two conductors are present, with current flow in opposite directions, and the total internal inductance is twice the value given in Eq. 37.15. The *single-phase internal inductance* is

$$L_{l,\text{int}} = \frac{\mu_0}{4\pi} = 1.0\times10^{-7}\ \text{H/m} \qquad 37.16$$

6. EXTERNAL INDUCTANCE

The *external inductance* is that inductance associated with the exterior of a solid conductor. That is, the fluxes in the space surrounding the conductor store the inductive energy. For air, the relative permeability, μ_r, is approximately one. Thus, the magnetic permeability of air is approximately that of free space, that is, $\mu \approx \mu_0$. The internal inductance per unit length for a single conductor is given by

$$\begin{aligned}
L_{l,\text{ext}} &= \left(\frac{\mu_0}{2\pi}\right)\ln\left(\frac{D}{r}\right) \\
&= 2\times10^{-7}\ln\left(\frac{D}{r}\right) \quad [\text{in H/m}] \qquad 37.17
\end{aligned}$$

Power–Transmission

HALLIBURTON EXHIBIT 1019
Halliburton Energy Services, Inc. v. U.S. Well Services, LLC, IPR2023-00557, Page 42

The term D is the distance between the centers of the conductors. The term r is the radius of the conductor. For a single-phase system, two conductors are present, with current flow in opposite directions, and the total external inductance is twice the value given in Eq. 37.17. The *single-phase external inductance* is

$$L_{l,\text{ext}} = \left(\frac{\mu_0}{\pi}\right) \ln\left(\frac{D}{r}\right)$$
$$= 4 \times 10^{-7} \ln\left(\frac{D}{r}\right) \quad \text{[in H/m]} \qquad 37.18$$

7. SINGLE-PHASE INDUCTANCE

The total inductance of a single-phase system, which consists of two conductors, is the sum of the internal and external inductances.[11]

$$L_l = L_{l,\text{int}} + L_{l,\text{ext}}$$
$$= \left(\frac{\mu_0}{4\pi}\right)\left(1 + 4\ln\left(\frac{D}{r}\right)\right) \quad \text{[in H/m]} \qquad 37.19$$

The first term of Eq. 37.19 represents the internal inductance of a solid conductor. The second term represents the inductance due to external fluxes. Equation 37.19 is simplified using the concept of the *geometric mean radius* (GMR), defined as[12]

$$\text{GMR} = re^{-\frac{1}{4}} \qquad 37.20$$

Substituting the geometric mean radius for the radius in Eq. 37.19 gives the following simplified form for the total single-phase inductance per unit length.

$$L_l = \left(\frac{\mu_0}{\pi}\right) \ln\left(\frac{D}{\text{GMR}}\right)$$
$$= 4 \times 10^{-7} \ln\left(\frac{D}{\text{GMR}}\right) \quad \text{[in H/m]} \qquad 37.21$$

Equation 37.21 is equivalent to Eq. 37.19 but represents a different model of the conductor. Specifically, Eq. 37.21 represents an equivalent thin-walled, hollow conductor of radius GMR with no internal flux linkage and thus no internal inductance.

Example 37.4

The wire in Ex. 37.3 is used in a single-phase system operating at 10 kHz with the lines spaced 0.5 m apart. Ignoring shunt effects, what is the impedance per unit length of line?

Solution

Ignoring the shunt conductance and capacitance gives impedance per unit length of

$$Z_l = R_l + jX_{L,l}$$

The resistance per unit length was determined in Ex. 37.3 to be 54 Ω/km or 54×10^{-3} Ω/m. The inductive reactance per unit length is

$$X_{L,l} = 2\pi f L_l$$

Thus, the only unknown is the inductance. Using Eqs. 37.19 and 37.20, and noting that a radius of 16 mil is 4.064×10^{-4} m, gives

$$L_l = 4 \times 10^{-7} \ln\left(\frac{D}{\text{GMR}}\right)$$
$$= 4 \times 10^{-7} \ln\left(\frac{D}{re^{-\frac{1}{4}}}\right)$$
$$= 4 \times 10^{-7} \ln\left(\frac{0.5 \text{ m}}{(4.064 \times 10^{-4} \text{ m})\, e^{-\frac{1}{4}}}\right)$$
$$= 2.95 \times 10^{-6} \text{ H/m}$$

The reactance per unit length is

$$X_{L,l} = 2\pi f L_l$$
$$= (2\pi)\left(10 \times 10^3 \text{ Hz}\right)\left(2.95 \times 10^{-6} \text{ H/m}\right)$$
$$= 1.85 \times 10^{-1} \ \Omega/\text{m}$$

The impedance per unit length is

$$Z_l = R_l + jX_{L,l} = 54 \times 10^{-3} + j1.85 \times 10^{-1} \ \Omega/\text{m}$$

Note that the inductive reactance has an effect approximately four times greater than the resistance.

8. SINGLE-PHASE CAPACITANCE

The shunt capacitance is the capacitance between the solid conductors. Power transmission line conductors are normally separated by air. For air, the relative permittivity, ε_r, is approximately one. Thus, the permittivity of air is approximately that of free space, that is, $\varepsilon \approx \varepsilon_0$. The capacitance of a single-phase system, which consists of two conductors, is

$$C_l = \frac{\pi\varepsilon_0}{\ln\left(\frac{D}{r}\right)} = \frac{2.78 \times 10^{-11}}{\ln\left(\frac{D}{r}\right)} \quad \text{[in F/m]} \qquad 37.22$$

The term D represents the distance between the centers of the conductors. The term r is the radius of the conductors. For a single-phase system, two conductors are present, with current flow in opposite directions.

[11] The equations used in this text assume that $D \gg r$ and that r is identical in the two conductors, which is generally the case in power transmission lines.

[12] The geometric mean radius is sometimes called the *self geometric mean distance* (GMD).

HALLIBURTON EXHIBIT 1019
Halliburton Energy Services, Inc. v. U.S. Well Services, LLC, IPR2023-00557, Page 43

Example 37.5

Copper wire, AWG #20, is used in a single-phase system at 10 kHz, with the conductors 0.5 m apart. What is the capacitive reactance per unit length?

Solution

The capacitive reactance per unit length is given by

$$X_{C,l} = \frac{1}{2\pi f C_l}$$

From Ex. 37.4, AWG #20 has a radius of 16 mil or 4.064×10^{-4} m. The capacitance per unit length is

$$\begin{aligned} C_l &= \frac{\pi \varepsilon_0}{\ln\left(\frac{D}{r}\right)} \\ &= \frac{\pi\left(8.854 \times 10^{-12}\ \frac{\text{F}}{\text{m}}\right)}{\ln\left(\frac{0.5\ \text{m}}{4.064 \times 10^{-4}\ \text{m}}\right)} \\ &= 3.91 \times 10^{-12}\ \text{F/m} \end{aligned}$$

The capacitive reactance is

$$\begin{aligned} X_C &= \frac{1}{2\pi f C} \\ &= \frac{1}{(2\pi)(10 \times 10^3\ \text{s}^{-1})(3.91 \times 10^{-12}\ \text{F})} \\ &= 4.07 \times 10^6\ \Omega \\ X_{C,l} &= 4.0 \times 10^6\ \Omega/\text{m} \end{aligned}$$

Note that the capacitive reactance has a much larger effect on the per-unit reactance of the line than the inductive reactance.

9. THREE-PHASE TRANSMISSION

In three-phase, three-wire, or four-wire balanced transmission, the sum of the instantaneous currents is zero, and the sum of the instantaneous voltages is zero.[13] The conductors are assumed to be equilaterally spaced at distance D. When the conductors are not symmetrically arranged, as is often the case, formulas used for the inductance and capacitance are still valid if the equivalent distance, D_e, is substituted for the distance (see Fig. 37.2(a) and (b)).[14]

$$D_e = \sqrt[3]{D_{\text{ab}} D_{\text{bc}} D_{\text{ca}}} \qquad 37.23$$

[13]The three-wire or four-wire balanced assumption allows simplifications in the derivations of the equations in this section.

[14]The equivalent spacing is sometimes called the *mutual geometric mean distance* (D_m or GMD).

Nonsymmetrical spacing causes electrostatic and electromagnetic imbalance among the lines, resulting in unequal phase voltages and currents. In large commercial power transmission systems, the effect is minimal because of the balancing effect of the rotating loads. The effect can be minimized by *transposition* of the lines as illustrated in Fig. 37.2(c). Transposing the lines improves reliability by minimizing the current induced in the event of a fault, reduces power losses, and reduces interference with nearby telecommunications lines.

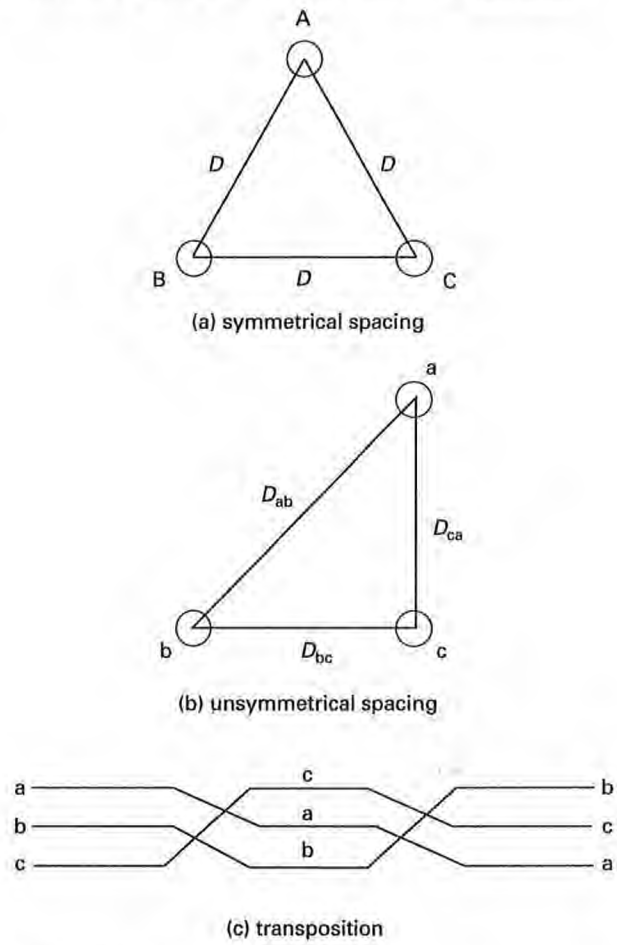

Figure 37.2 *Transmission Line Spacing*

The per-phase inductance per unit length of a three-phase transmission line is

$$\begin{aligned} L_l &= \frac{\mu_0}{2\pi} \ln\left(\frac{D_e}{\text{GMR}}\right) \\ &= 2 \times 10^{-7} \ln\left(\frac{D_e}{\text{GMR}}\right) \quad [\text{in H/m}] \qquad 37.24 \end{aligned}$$

Mutual inductance, M, also exists, but for symmetrically spaced conductors the total is zero. This equation is similar to Eq. 37.21 for the total inductance of a single-phase system. Specifically, it is one-half the single-phase value. Per-phase values are equivalent to phase-to-neutral values.

Power–Transmission

HALLIBURTON EXHIBIT 1019
Halliburton Energy Services, Inc. v. U.S. Well Services, LLC, IPR2023-00557, Page 44

The per-phase capacitance per unit length of a three-phase transmission line is

$$C_l = \frac{2\pi\varepsilon_0}{\ln\left(\frac{D_e}{r}\right)} = \frac{5.56 \times 10^{-11}}{\ln\left(\frac{D_e}{r}\right)} \quad \text{[in F/m]} \qquad 37.25$$

This equation is similar to Eq. 37.22 for the total capacitance of a single-phase system. Specifically, it is twice the single-phase value. Per-phase values are equivalent to phase-to-phase values.

10. POWER TRANSMISSION LINES

Power transmission lines normally consist of aluminum strands with a steel core or all-aluminum alloy wires. The lines consist of either three or four conductors. The voltage drop in such lines can be calculated using the principles in Secs. 37-3 through 37-9 and the basic formula

$$\mathbf{V}_l = \mathbf{I}R_l + j\mathbf{I}X_l = \mathbf{I}\mathbf{Z}_l \qquad 37.26$$

The actual calculation is complicated. Frequency and spacing affect the resistance, inductance, and capacitance. The geometric mean radius given in Eq. 37.20 must be adjusted for stranded conductors, taking into account both the total number and the layering geometry.

Such calculations are unnecessary, because the properties of standard conductors have been tabulated and the conductors given code names for ease of reference. A sample table is given in App. 37.A, which uses English Engineering System units and a 1 ft symmetrical spacing between conductors. The formula for inductive reactance per mile used in App. 37.A is

$$X_L = 2.022 \times 10^{-3} f \ln\left(\frac{D}{\text{GMR}}\right) \quad \text{[in } \Omega\text{/mi]} \qquad 37.27$$

For line-to-line spacings other than one foot, the correction factor given by Eq. 37.28 must be applied.[15]

$$K_L = 1 + \frac{\ln D}{\ln\left(\frac{1}{\text{GMR}}\right)} \qquad 37.28$$

The formula for capacitive reactance per mile used in App. 37.A is approximately

$$X_C = \left(\frac{1.781 \times 10^6}{f}\right) \ln\left(\frac{D}{r}\right) \quad \text{[in } \Omega\text{/mi]} \qquad 37.29$$

For line-to-line spacings other than one foot, the correction factor given by Eq. 37.30 must be applied.

$$K_C = 1 + \frac{\ln D}{\ln\left(\frac{1}{r}\right)} \qquad 37.30$$

The values of D, GMR, and r are in feet when used in Eqs. 37.27 through 37.30. Appendix 37.A can be used for single-phase systems as well. The values for inductive and capacitive reactance, Eqs. 37.27 and 37.29, double for single-phase systems.

Example 37.6

A single-phase system uses merlin conductors spaced 10 ft apart from center to center. What is the total shunt reactance for 10 mi of the system?

Solution

From App. 37.A, the capacitive reactance for a one-foot spacing is 0.1055 MΩ-mi. The diameter is taken from App. 37.A as 0.684 in, thus the radius is 0.342 in, or 0.0285 ft. The correction factor for the 10 ft spacing is

$$K_C = 1 + \frac{\ln D}{\ln\left(\frac{1}{r}\right)} = 1 + \frac{\ln(10)}{\ln\left(\frac{1}{0.0285}\right)} = 1.647$$

The capacitive reactance for a single conductor is

$$\begin{aligned} X_{C,\text{actual}} &= X_{C,\text{table}} K_C \\ &= (0.1055 \text{ M}\Omega\text{-mi})(1.647) \\ &= 0.1738 \text{ M}\Omega\text{-mi} \end{aligned}$$

This is a single-phase system. That is, two conductors are present. The total capacitive reactance is

$$X_{C,\text{total}} = (2)(0.1738 \text{ M}\Omega\text{-mi}) = 0.3475 \text{ M}\Omega\text{-mi}$$

For a 10 mi portion of the system, the capacitive reactance is

$$X_C = \frac{0.3475 \text{ M}\Omega\text{-mi}}{10 \text{ mi}} = 0.03475 \text{ M}\Omega$$

11. TRANSMISSION LINE REPRESENTATION

Analysis of transmission lines is accomplished by approximating the line with distributed parameters. The line is represented as a series-parallel combination of electrical components applicable to the length of the transmission system.[16] Three-phase transmission systems are operated in as balanced a configuration as possible, but are seldom equilaterally spaced. Transposition may alleviate this imbalance, but it is seldom used.

[15] The GMR used in Eq. 37.27, not Eq. 37.20, is the one tabulated. Equation 37.20 is a good approximation of the tabulated value.

[16] The shunt conductance is normally insignificant and is excluded from the models used.

HALLIBURTON EXHIBIT 1019
Halliburton Energy Services, Inc. v. U.S. Well Services, LLC, IPR2023-00557, Page 45

Table 37.3 *Per-Phase ABCD Constants for Transmission Lines*

transmission line length	equivalent circuit	A	B	C	D
short <80 km	series impedance Fig. 37.4	1	Z	0	1
medium 80–240 km	nominal-T Fig. 37.5(a)	$1+\frac{1}{2}YZ$	$Z\left(1+\frac{1}{4}YZ\right)$	Y	$1+\frac{1}{2}YZ$
medium 80–240 km	nominal-Π Fig. 37.5(b)	$1+\frac{1}{2}YZ$	Z	$Y\left(1+\frac{1}{4}YZ\right)$	$1+\frac{1}{2}YZ$
long >240 km	distributed parameters Fig. 37.6	$\cosh\gamma l$	$Z_0\sinh\gamma l$	$\frac{\sinh\gamma l}{Z_0}$	$\cosh\gamma l$

Nevertheless, calculations assume equilateral spacing and transposition. Calculated values closely approximate actual values if the equivalent spacing, D_e, of Eq. 37.23 is used in place of the actual spacing. Given these assumptions, balanced three-phase systems can be analyzed on a per-phase basis using a hypothetical neutral, which contributes no resistance, inductance, or capacitance. Lines with significant imbalances must be analyzed using symmetrical components.

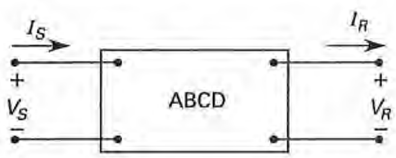

(a) network

$$V_S = AV_R + BI_R$$
$$I_S = CV_R + DI_R$$

(b) equations

$$\begin{bmatrix} V_S \\ I_S \end{bmatrix} = \begin{bmatrix} A & B \\ C & D \end{bmatrix} \begin{bmatrix} V_R \\ I_R \end{bmatrix}$$

(c) matrix form of equations

Figure 37.3 *Transmission Line Two-Port Network*

Design of all transmission lines, regardless of length, must account for the voltage regulation and efficiency of power transmission, η_P. In terms of a *sending end* (subscript S), or source, and a *receiving end* (subscript R), or load, these quantities are defined by Eqs. 37.31 and 37.32.

$$\text{VR} = \frac{|V_{R,\text{nl}}| - |V_{R,\text{fl}}|}{|V_{R,\text{fl}}|} \qquad 37.31$$

$$\eta_P = \frac{P_R}{P_S} \qquad 37.32$$

Any transmission line may be represented as a two-port network as shown in Fig. 37.3. The ABCD parameters are sometimes called *generalized circuit constants* and, in general, are complex. (Though complex, common practice is to not show them in complex notation. That is, they are not shown in bold.) The ABCD parameters for the various transmission lines are given in Table 37.3.

12. SHORT TRANSMISSION LINES

Short transmission lines are 60 Hz lines that are less than 80 km (50 mi) long. The shunt reactance is excluded from the model because it is much greater than most load impedances and significantly greater than the line impedance. Only the series resistance and inductance are significant as shown in Fig. 37.4.

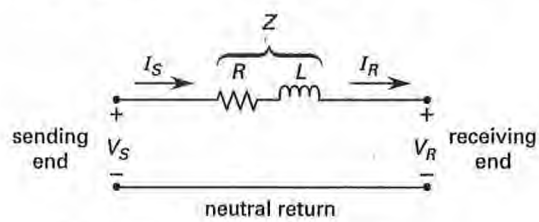

Figure 37.4 *Short Transmission Line Model*

The impedance is given by[17]

$$Z = R + jX_L \qquad 37.33$$

[17]The quantities represent total amounts but are calculated per unit length, corrected for conductor spacing, and multiplied by the length of the transmission line. It should also be noted that the impedance is a per-phase quantity and needs to be multiplied by three to get the line-to-line impedance in a delta-connected load.

Power–Transmission

HALLIBURTON EXHIBIT 1019
Halliburton Energy Services, Inc. v. U.S. Well Services, LLC, IPR2023-00557, Page 46

Using the ABCD parameters in Table 37.3 results in Eqs. 37.34 and 37.35.

$$V_S = V_R + I_R Z \qquad 37.34$$

$$I_S = I_R \qquad 37.35$$

Example 37.7

A 30 mi hawk three-phase 60 Hz transmission line has a 10 ft spacing between conductors. The sending-end voltage is 11 kV per phase. The load draws 200 A per phase at 0.8 pf lagging. The entire system is assumed to operate at 20°C. What is the voltage regulation in percent?

Solution

This is a short transmission line. The voltage regulation is given by Eq. 37.31. Thus, the voltage on the receiving end needs to be determined. The current on the receiving end and its angle (via the power factor) are given. Thus, to determine the voltage on the receiving end, the impedance must be calculated. From App. 37.A, the uncorrected resistance and reactance are

$$R_{l,\text{AC}} = 0.1931\ \Omega/\text{mi}$$

$$X_{L,l} = 0.430\ \Omega/\text{mi}$$

The correction factor for a 10 ft spacing, using the GMR value in App. 37.A, is

$$K_L = 1 + \frac{\ln D}{\ln\left(\dfrac{1}{\text{GMR}}\right)} = 1 + \frac{\ln(10)}{\ln\left(\dfrac{1}{0.0289}\right)} = 1.6497$$

The corrected reactance is

$$\begin{aligned} X_{L,l(\text{corrected})} &= K_L X_{L,l} \\ &= (1.6497)(0.430) \\ &= 0.71\ \Omega/\text{mi} \end{aligned}$$

The impedance for 30 mi of line is

$$\begin{aligned} Z &= (R_{l,\text{AC}} + jX_{L,l})\,(30\ \text{mi}) \\ &= \left(0.1931\ \frac{\Omega}{\text{mi}} + j0.71\ \frac{\Omega}{\text{mi}}\right)(30\ \text{mi}) \\ &= 5.79 + j21.3\ \Omega \\ &= 22.1\angle 74.8^\circ\ \Omega \end{aligned}$$

The power factor is given as 0.8 lagging, thus the current lags the receiving-end voltage by 36.8°. Since this is referenced to the receiving-end voltage, take V_R to be the reference at 0°. The current is

$$I_R = 200\angle -36.8^\circ\ \text{A}$$

The voltage drop across the line at full load is

$$\begin{aligned} V_{\text{drop}} &= I_R Z \\ &= (200\angle -36.8^\circ\ \text{A})\,(22.1\angle 74.8^\circ\ \Omega) \\ &= 4.42\angle 38.0^\circ\ \text{kV} \end{aligned}$$

Using the relationship for the sending and receiving ends given by Eq. 37.34 gives

$$\begin{aligned} V_S &= V_R + I_R Z \\ V_R &= V_S - I_R Z \\ &= 11\angle\theta\ \text{kV} - 4.42\angle 38^\circ\ \text{kV} \\ |V_R|\angle 0^\circ\ \text{kV} &= |V_R| + j0 \\ &= (11\cos\theta + j11\sin\theta) - (3.48 + j2.72) \end{aligned}$$

The angle θ is the angle of the sending-end voltage with respect to the receiving-end voltage, which was selected as the reference. Since no imaginary portion exists on the left-hand side of the equation, the following must be true.

$$11\sin\theta - 2.72 = 0$$

$$\sin\theta = \frac{2.72}{11} = 0.247$$

Using this information to determine the angle and the term $\cos\theta$ gives

$$\theta = \sin^{-1}(0.247) = 14.3^\circ$$

$$\cos\theta = \cos 14.3^\circ = 0.969$$

Substituting this information gives the receiving-end voltage at full load.

$$\begin{aligned} |V_R|\,\angle 0^\circ\ \text{kV} &= |V_R| + j0 \\ &= (11\cos\theta + j11\sin\theta) - (3.48 + j2.72) \\ &= (11)(0.969) + j(11)(0.247) - 3.48 - j2.72 \\ &= 7.18\angle 0^\circ\ \text{kV} \end{aligned}$$

At a no-load condition, $I_R = 0$ in Eq. 37.34, and the receiving-end voltage equals the sending-end voltage. That is, $V_{R,\text{nl}} = 11$ kV. The regulation, from Eq. 37.31, is

$$\begin{aligned} \text{VR} &= \frac{|V_{R,\text{nl}}| - |V_{R,\text{fl}}|}{|V_{R,\text{fl}}|} \\ &= \frac{11\ \text{kV} - 7.18\ \text{kV}}{7.18\ \text{kV}} \\ &= 0.532 \quad (53.2\%) \end{aligned}$$

HALLIBURTON EXHIBIT 1019
Halliburton Energy Services, Inc. v. U.S. Well Services, LLC, IPR2023-00557, Page 47

13. MEDIUM-LENGTH TRANSMISSION LINES

Medium-length transmission lines are 60 Hz lines between 80 and 240 km (50 and 150 mi) long. The shunt reactance is significant enough to be included. The medium-length line is modeled in one of two ways as shown in Fig. 37.5.

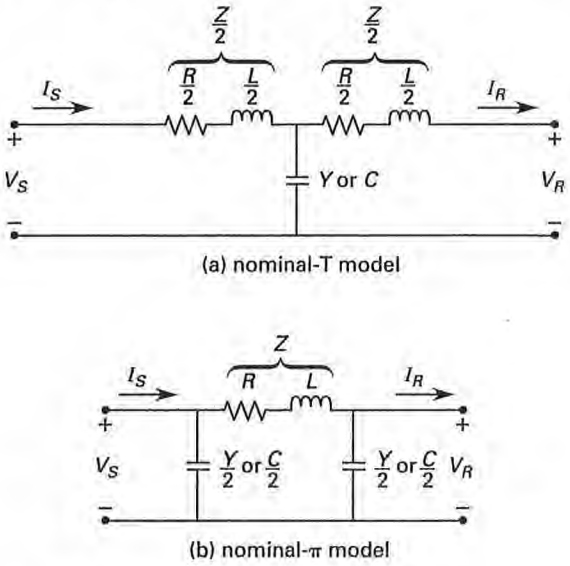

Figure 37.5 *Medium-Length Transmission Line Models*

The impedance is given by[18]

$$Z = R + jX_L \qquad 37.36$$

The admittance is given by

$$Y = jB_C = \frac{j}{X_C} = -\frac{1}{jX_C} \qquad 37.37$$

Using the ABCD parameters in Table 37.3 gives Eqs. 37.38 and 37.39 for the T approximation.

$$V_S = \left(1 + \tfrac{1}{2}YZ\right) V_R + \left(Z\left(1 + \tfrac{1}{4}YZ\right)\right) I_R \qquad 37.38$$

$$I_S = YV_R + \left(1 + \tfrac{1}{2}YZ\right) I_R \qquad 37.39$$

Using the ABCD parameters in Table 37.3 gives Eqs. 37.40 and 37.41 for the Π approximation.[19]

$$V_S = \left(1 + \tfrac{1}{2}YZ\right) V_R + ZI_R \qquad 37.40$$

$$I_S = \left(Y\left(1 + \tfrac{1}{4}YZ\right)\right) V_R + \left(1 + \tfrac{1}{2}YZ\right) I_R \qquad 37.41$$

[18]The quantities represent total amounts but are calculated per unit length, corrected for conductor spacing, and multiplied by the length of the transmission line. It should also be noted that the impedance is a per-phase quantity and needs to be multiplied by three to get the line-to-line impedance in a delta-connected load.

[19]The Π approximation results in simpler regulation calculations.

14. LONG TRANSMISSION LINES

Long transmission lines are 60 Hz lines greater than 240 km (150 mi) long. All the parameters must be represented as distributed parameters, that is, per unit length, as shown in Fig. 37.6. The shunt conductance is shown for completeness only and is excluded from most calculations, as will be done here.

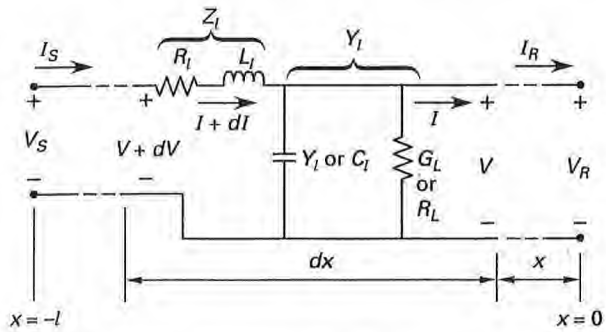

Figure 37.6 *Long Transmission Line Model*

The impedance per unit length is[20]

$$Z_l = R_l + jX_{L,l} \qquad 37.42$$

The admittance per unit length is

$$Y_l = jB_{C,l} = \frac{j}{X_{C,l}} = -\frac{1}{jX_{C,l}} = j\omega C \qquad 37.43$$

The voltage at any point along the line of length l in Fig. 37.6 is

$$\frac{\partial^2 V}{\partial x^2} = \gamma^2 V \qquad 37.44$$

The term γ is called the *propagation constant*, measured in radians per meter (mile), and is given by

$$\gamma = \sqrt{Y_l Z_l} = \sqrt{-B_{C,l}X_{L,l} + jR_l B_{C,l}} = \alpha + j\beta \qquad 37.45$$

The magnitude of the propagation constant is

$$|\gamma| = \sqrt{B_{C,l}}\sqrt[4]{R_l^2 + X_{L,l}^2} \qquad 37.46$$

The term α is called the *attenuation constant*, measured in nepers per meter (mile), and is given by

$$\alpha = |\gamma| \cos\left(\tfrac{1}{2}\arctan\left(\frac{-R_l}{X_{L,l}}\right)\right) \qquad 37.47$$

[20]The per unit length impedance and admittance are sometimes written with small letters, z and y, to emphasize their per-unit qualities.

Power–Transmission

HALLIBURTON EXHIBIT 1019
Halliburton Energy Services, Inc. v. U.S. Well Services, LLC, IPR2023-00557, Page 48

The term β is called the *phase constant*, measured in radians per meter (mile), and is given by

$$\beta = |\gamma| \sin\left(\tfrac{1}{2}\arctan\left(\frac{-R_l}{X_{L,l}}\right)\right) \qquad 37.48$$

A solution to Eq. 37.44 giving the voltage at any point along the line is[21]

$$\begin{aligned} V &= \tfrac{1}{2}V_R\left(e^{\gamma x} + e^{-\gamma x}\right) \\ &\quad + \tfrac{1}{2}I_R Z_0\left(e^{\gamma x} - e^{-\gamma x}\right) \\ &= V_R \cosh\gamma x + I_R Z_0 \sinh\gamma x \end{aligned} \qquad 37.49$$

Similarly, the current at any point along the line is given by

$$\begin{aligned} I &= \tfrac{1}{2}I_R\left(e^{\gamma x} + e^{-\gamma x}\right) \\ &\quad + \tfrac{1}{2}\left(\frac{V_R}{Z_0}\right)\left(e^{\gamma x} - e^{-\gamma x}\right) \\ &= I_R \cosh\gamma x + \left(\frac{V_R}{Z_0}\right)\sinh\gamma x \end{aligned} \qquad 37.50$$

The term Z_0 is called the *characteristic impedance* and is given by

$$\begin{aligned} Z_0 &= \sqrt{\frac{Z_l}{Y_l}} = \sqrt{\frac{R_l + jX_{L,l}}{jB_{C,l}}} \\ &= \sqrt{X_{L,l}X_{C,l} - jX_{C,l}R_l} \quad [\text{in } \Omega] \end{aligned} \qquad 37.51$$

The magnitude of the characteristic impedance is

$$|Z_0| = \sqrt{X_{C,l}}\sqrt[4]{R_l^2 + X_l^2} \qquad 37.52$$

The angle of the characteristic impedance is

$$\angle Z_0 = \tfrac{1}{2}\arctan\left(\frac{-R_l}{X_{L,l}}\right) \qquad 37.53$$

Equations 37.49 and 37.50 represent *traveling waves*. Specifically, the terms with $e^{-\gamma x}$ represent waves traveling in the positive x-direction. (The distance x is defined as positive to the right, the direction toward the receiving end, that is, toward the direction power flows.) Terms with $e^{\gamma x}$ represent waves traveling in the negative x-direction. The two equations are the value of the two waves superimposed at that point in the line. Since $V = V_S$ (see Eq. 37.49) at $x = -l$ (see Fig. 37.6), and consistent with the ABCD parameters in Table 37.3, the voltage at the sending end is

$$V_S = V_R \cosh\gamma l + I_R Z_0 \sinh\gamma l \qquad 37.54$$

Since $I = I_S$ (see Eq. 37.50) at $x = -l$ (see Fig. 37.6), and consistent with the ABCD parameters in Table 37.3, the current at the sending end is

$$I_S = I_R \cosh\gamma l + \left(\frac{V_R}{Z_0}\right)\sinh\gamma l \qquad 37.55$$

The term l in Eqs. 37.54 and 37.55 is the transmission line length.

15. REFLECTION COEFFICIENT

Energy propagated along a transmission line can be thought of as traveling electromagnetic waves (see Sec. 37-14). Loads interact with these waves in a manner that absorbs some of the energy and reflects the remainder. If the transmission line is terminated with the characteristic impedance, Z_0, no power is reflected back to the source or sending end. If the termination impedance is other than Z_0, the power (signal) from the generator (source) will be partially reflected back to the generator. Assuming a steady-state sinusoidal source, the generator's waves will then combine in the transmission line with the reflected waves to form *standing waves*. The *standing wave ratio*, SWR, is the ratio of the maximum to the minimum voltages (currents) encountered along the transmission line. Typically, the SWR is greater than unity. If the terminating impedance matches the characteristic impedance, all the input power provided by the generator is absorbed by the load and the SWR equals one. The standing wave ratios are given by

$$\text{VSWR} = \frac{V_{\max}}{V_{\min}} \qquad 37.56$$

$$\text{ISWR} = \frac{I_{\max}}{I_{\min}} \qquad 37.57$$

The *reflection coefficient*, Γ, is the ratio of the reflected to the incident electric parameter. The voltage reflection coefficient for the load is given by

$$\Gamma_L = \frac{V_{\text{reflected}}}{V_{\text{incident}}} = \frac{Z_{\text{load}} - Z_0}{Z_{\text{load}} + Z_0} \qquad 37.58$$

The current reflection coefficient is the negative of the reflection coefficient for the voltage. That is,

$$\Gamma_L = \frac{I_{\text{reflected}}}{I_{\text{incident}}} = \frac{Z_0 - Z_{\text{load}}}{Z_0 + Z_{\text{load}}} \qquad 37.59$$

The fraction of incident power that is reflected back to the source from the load is Γ^2. The relationship between the reflection coefficient and the standing wave ratio is

$$\Gamma = \frac{\text{SWR} - 1}{\text{SWR} + 1} \qquad 37.60$$

[21] The solution assumes a sinusoidal steady-state condition. That is, transmission lines are generally AC steady-state networks.

HALLIBURTON EXHIBIT 1019
Halliburton Energy Services, Inc. v. U.S. Well Services, LLC, IPR2023-00557, Page 49

Electrical Engineering Reference Manual

for the Electrical and Computer PE Exam

Sixth Edition

The *Electrical Engineering Reference Manual* is the most complete exam reference and study guide available for the breadth-and-depth Electrical and Computer PE examination. Seventy chapters offer in-depth review of subject areas likely to appear on the exam. More than 370 solved sample problems demonstrate how to arrive at solutions most efficiently. Hundreds of key tables, charts, and graphs put essential information at your fingertips. And when you take this book into the exam, where time means everything, the comprehensive index and glossary will help you find what you need quickly and easily.

This *Reference Manual* and its companion publication, *Practice Problems for the Electrical and Computer Engineering PE Exam*, are part of PPI's best-selling exam review series, used by over 800,000 engineers to prepare for their licensing exams.

Among the Topics Covered

Background: Mathematics, General Theory
Fields: Electrostatics, Magnetostatics, Electrodynamics
Circuit Theory: DC/AC Fundamentals, Transformers, Linear Circuit Analysis, Time & Frequency Response
Power: Generation, Transmission, Rotating Machinery, Protection
Measurement & Instrumentation
Electronics: Components, Amplifiers, Pulse Circuits
Computers: Hardware & Software Fundamentals, Architecture, Digital Logic, Logic Network Design, Operating Systems, Digital Systems
Communications: High-Frequency Transmission, Links, Signal Formats & Multiplexing, Systems & Channels
Control Systems
Electrical Materials
Codes and Standards: NEC

About the Author

John A. Camara holds PE licenses in both electrical and nuclear engineering. He is a retired U.S. Navy lieutenant commander and is currently an associate technical fellow with The Boeing Company. In the Navy, he served as a nuclear-trained electrical engineer and submarine officer. Mr. Camara received his BS in electrical and computer engineering/materials science and engineering from the University of California at Davis and his MS in space systems from the Florida Institute of Technology.

Don't miss all the current PE exam news, the latest test-taker advice, and the unique community of the Exam Forum—visit **www.ppi2pass.com**.

ISBN 1-888577-56-8
90000>
9 781888 577563
EERM6

Professional Publications, Inc.
www.ppi2pass.com

HALLIBURTON EXHIBIT 1019
Halliburton Energy Services, Inc. v. U.S. Well Services, LLC, IPR2023-00557, Page 50