US011136870B2

(12) **United States Patent**
Broussard et al.

(10) **Patent No.: US 11,136,870 B2**
(45) **Date of Patent: *Oct. 5, 2021**

(54) **SYSTEM FOR PUMPING HYDRAULIC FRACTURING FLUID USING ELECTRIC PUMPS**

(71) Applicant: **U.S. Well Services, LLC**, Houston, TX (US)

(72) Inventors: **Joel N. Broussard**, Lafayette, LA (US); **Jeff McPherson**, Spring, TX (US); **Robert Kurtz**, Fairmont, WV (US)

(73) Assignee: **U.S. Well Services, LLC**, Houston, TX (US)

(*) Notice: Subject to any disclaimer, the term of this patent is extended or adjusted under 35 U.S.C. 154(b) by 0 days.

This patent is subject to a terminal disclaimer.

(21) Appl. No.: **16/456,777**

(22) Filed: **Jun. 28, 2019**

(65) **Prior Publication Data**

US 2020/0182032 A1 Jun. 11, 2020

Related U.S. Application Data

(63) Continuation of application No. 15/202,085, filed on Jul. 5, 2016, now Pat. No. 10,337,308, which is a (Continued)

(51) **Int. Cl.**
E21B 43/26 (2006.01)
E21B 43/267 (2006.01)
(Continued)

(52) **U.S. Cl.**
CPC ***E21B 43/26*** (2013.01); ***E21B 43/267*** (2013.01); ***F01D 15/08*** (2013.01); ***F01D 15/10*** (2013.01);
(Continued)

(58) **Field of Classification Search**
CPC E21B 43/26
See application file for complete search history.

(56) **References Cited**

U.S. PATENT DOCUMENTS

1,656,861 A 1/1928 Leonard
1,671,436 A 5/1928 Melott
(Continued)

FOREIGN PATENT DOCUMENTS

CA 2406801 11/2001
CA 2707269 12/2010
(Continued)

OTHER PUBLICATIONS

International Search Report and Written Opinion dated Jan. 2, 2020 in related PCT Application No. PCT/US19/55325.
(Continued)

Primary Examiner — Kenneth L Thompson
(74) *Attorney, Agent, or Firm* — Hogan Lovells US LLP

(57) **ABSTRACT**

A system for hydraulically fracturing an underground formation in an oil or gas well to extract oil or gas from the formation, the oil or gas well having a wellbore that permits passage of fluid from the wellbore into the formation. The system includes a plurality of electric pumps fluidly connected to the well, and configured to pump fluid into the wellbore at high pressure so that the fluid passes from the wellbore into the, and fractures the formation. The system can also include a plurality of natural gas powered generators electrically connected to the plurality of electric pumps to provide electrical power to the pumps.

16 Claims, 2 Drawing Sheets

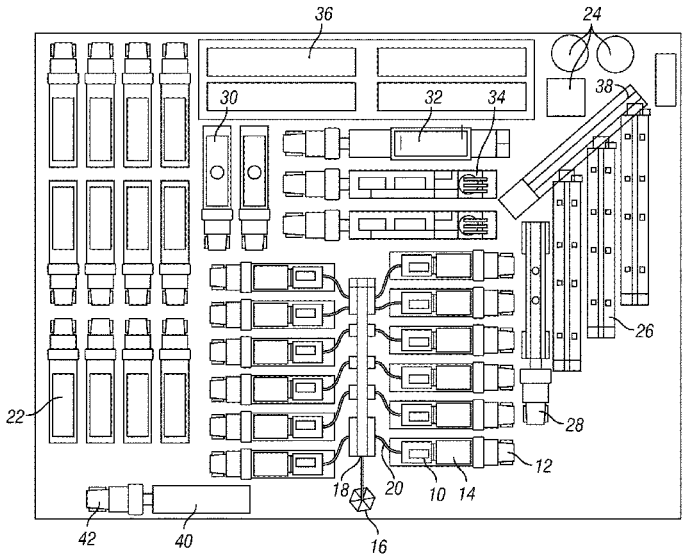

Related U.S. Application Data

continuation of application No. 13/679,689, filed on Nov. 16, 2012, now Pat. No. 9,410,410.

(51) **Int. Cl.**

F01D 15/08	(2006.01)
F01D 15/10	(2006.01)
F02C 3/22	(2006.01)
F04B 17/03	(2006.01)
F04B 19/22	(2006.01)
F04B 49/20	(2006.01)
H02P 23/00	(2016.01)

(52) **U.S. Cl.**

CPC ***F02C 3/22*** (2013.01); ***F04B 17/03*** (2013.01); ***F04B 19/22*** (2013.01); ***F04B 49/20*** (2013.01); ***H02P 23/00*** (2013.01); *F05D 2220/32* (2013.01)

(56) **References Cited**

U.S. PATENT DOCUMENTS

2,004,077	A	6/1935	McCartney
2,183,364	A	12/1939	Bailey
2,220,622	A	11/1940	Aitken
2,248,051	A	7/1941	Armstrong
2,407,796	A	9/1946	Page
2,416,848	A	3/1947	Rothery
2,610,741	A	9/1952	Schmid
2,753,940	A	7/1956	Bonner
3,055,682	A	9/1962	Bacher
3,061,039	A	10/1962	Peters
3,066,503	A	12/1962	Fleming
3,302,069	A	1/1967	Webster
3,334,495	A	8/1967	Jensen
3,722,595	A	3/1973	Kiel
3,764,233	A	10/1973	Strickland
3,773,140	A	11/1973	Mahajan
3,837,179	A	9/1974	Barth
3,849,662	A	11/1974	Blaskowski
3,878,884	A	4/1975	Raleigh
3,881,551	A	5/1975	Terry
4,037,431	A	7/1977	Sugimoto
4,100,822	A	7/1978	Rosman
4,151,575	A	4/1979	Hogue
4,226,299	A	10/1980	Hansen
4,265,266	A	5/1981	Kierbow et al.
4,432,064	A	2/1984	Barker
4,442,665	A	4/1984	Fick et al.
4,456,092	A	6/1984	Kubozuka
4,506,982	A	3/1985	Smithers et al.
4,512,387	A	4/1985	Rodriguez
4,529,887	A	7/1985	Johnson
4,538,916	A	9/1985	Zimmerman
4,676,063	A	6/1987	Goebel et al.
4,759,674	A	7/1988	Schroder
4,793,386	A	12/1988	Sloan
4,845,981	A	7/1989	Pearson
4,922,463	A	5/1990	Del Zotto et al.
5,004,400	A	4/1991	Handke
5,006,044	A	4/1991	Walker, Sr.
5,025,861	A	6/1991	Huber et al.
5,050,673	A	9/1991	Baldridge
5,114,239	A	5/1992	Allen
5,130,628	A	7/1992	Owen
5,131,472	A	7/1992	Dees et al.
5,172,009	A	12/1992	Mohan
5,189,388	A	2/1993	Mosley
5,230,366	A	7/1993	Marandi
5,366,324	A	11/1994	Arlt
5,422,550	A	6/1995	McClanahan
5,433,243	A	7/1995	Griswold
5,439,066	A	8/1995	Gipson
5,517,822	A	5/1996	Haws et al.
5,548,093	A	8/1996	Sato
5,590,976	A	1/1997	Kilheffer et al.
5,655,361	A	8/1997	Kishi
5,736,838	A	4/1998	Dove et al.
5,755,096	A	5/1998	Holleyman
5,790,972	A	8/1998	Kohlenberger
5,865,247	A	2/1999	Paterson
5,879,137	A	3/1999	Yie
5,894,888	A	4/1999	Wiemers
5,907,970	A	6/1999	Havlovick et al.
5,950,726	A	9/1999	Roberts
6,097,310	A	8/2000	Harrell et al.
6,138,764	A	10/2000	Scarsdale et al.
6,142,878	A	11/2000	Barin
6,164,910	A	12/2000	Mayleben
6,202,702	B1	3/2001	Ohira
6,208,098	B1	3/2001	Kume
6,254,462	B1	7/2001	Kelton
6,271,637	B1	8/2001	Kushion
6,273,193	B1	8/2001	Hermann
6,315,523	B1	11/2001	Mills
6,477,852	B2	11/2002	Dodo
6,484,490	B1	11/2002	Olsen
6,491,098	B1	12/2002	Dallas
6,529,135	B1	3/2003	Bowers et al.
6,626,646	B2	9/2003	Rajewski
6,719,900	B2	4/2004	Hawkins
6,765,304	B2	7/2004	Baten et al.
6,776,227	B2	8/2004	Beida
6,802,690	B2	10/2004	Han
6,808,303	B2	10/2004	Fisher
6,931,310	B2	8/2005	Shimizu et al.
6,936,947	B1	8/2005	Leijon
6,985,750	B1	1/2006	Vicknair et al.
7,082,993	B2	8/2006	Ayoub
7,104,233	B2	9/2006	Ryczek et al.
7,170,262	B2	1/2007	Pettigrew
7,173,399	B2	2/2007	Sihler
7,308,933	B1	12/2007	Mayfield
7,312,593	B1	12/2007	Streicher et al.
7,336,514	B2	2/2008	Amarillas
7,445,041	B2	11/2008	O'Brien
7,494,263	B2	2/2009	Dykstra et al.
7,500,642	B2	3/2009	Cunningham
7,525,264	B2	4/2009	Dodge
7,563,076	B2	7/2009	Brunet
7,581,379	B2	9/2009	Yoshida
7,675,189	B2	3/2010	Grenier
7,683,499	B2	3/2010	Saucier
7,717,193	B2	5/2010	Egilsson et al.
7,755,310	B2	7/2010	West et al.
7,807,048	B2	10/2010	Collette
7,835,140	B2	11/2010	Mori
7,845,413	B2	12/2010	Shampine et al.
7,926,562	B2	4/2011	Poitzsch
7,894,757	B2	7/2011	Keast
7,977,824	B2	7/2011	Halen et al.
8,037,936	B2	10/2011	Neuroth
8,054,084	B2	11/2011	Schulz et al.
8,083,504	B2	12/2011	Williams
8,091,928	B2	1/2012	Carrier
8,096,354	B2	1/2012	Poitzsch
8,096,891	B2	1/2012	Lochtefeld
8,139,383	B2	3/2012	Efraimsson
8,146,665	B2	4/2012	Neal
8,154,419	B2	4/2012	Daussin et al.
8,232,892	B2	7/2012	Overholt et al.
8,261,528	B2	9/2012	Chillar
8,272,439	B2	9/2012	Strickland
8,310,272	B2	11/2012	Quarto
8,354,817	B2	1/2013	Yeh et al.
8,474,521	B2	7/2013	Kajaria
8,506,267	B2	8/2013	Gambier et al.
8,534,235	B2	9/2013	Chandler
8,573,303	B2	11/2013	Kerfoot
8,596,056	B2	12/2013	Woodmansee
8,616,005	B1	12/2013	Cousino
8,616,274	B2	12/2013	Belcher et al.
8,646,521	B2	2/2014	Bowen
8,692,408	B2	4/2014	Zhang et al.

(56) **References Cited**

U.S. PATENT DOCUMENTS

8,727,068	B2	5/2014	Bruin
8,760,657	B2	6/2014	Pope
8,763,387	B2	7/2014	Schmidt
8,774,972	B2	7/2014	Rusnak et al.
8,789,601	B2	7/2014	Broussard
8,795,525	B2	8/2014	McGinnis et al.
8,800,652	B2	8/2014	Bartko
8,807,960	B2	8/2014	Stephenson
8,838,341	B2	9/2014	Kumano
8,851,860	B1	10/2014	Mail
8,857,506	B2	10/2014	Stone, Jr.
8,899,940	B2	12/2014	Laugemors
8,905,056	B2	12/2014	Kendrick
8,905,138	B2	12/2014	Lundstedt et al.
8,997,904	B2	4/2015	Cryer
9,018,881	B2	4/2015	Mao et al.
9,051,822	B2	6/2015	Ayan
9,051,923	B2	6/2015	Kuo
9,061,223	B2	6/2015	Winborn
9,062,545	B2	6/2015	Roberts et al.
9,067,182	B2	6/2015	Nichols
9,103,193	B2	8/2015	Coll
9,119,326	B2	8/2015	McDonnell
9,121,257	B2	9/2015	Coli et al.
9,140,110	B2	9/2015	Coli et al.
9,160,168	B2	10/2015	Chapel
9,260,253	B2	2/2016	Naizer
9,322,239	B2	4/2016	Angeles Boza et al.
9,324,049	B2	4/2016	Thomeer
9,340,353	B2	5/2016	Oren
9,366,114	B2	6/2016	Coli et al.
9,410,410	B2	8/2016	Broussard et al.
9,450,385	B2	9/2016	Kristensen
9,475,020	B2	10/2016	Coli et al.
9,475,021	B2	10/2016	Coli et al.
9,482,086	B2	11/2016	Richardson et al.
9,499,335	B2	11/2016	McIver
9,506,333	B2	11/2016	Castillo et al.
9,513,055	B1	12/2016	Seal
9,534,473	B2	1/2017	Morris et al.
9,562,420	B2	2/2017	Morris et al.
9,587,649	B2	3/2017	Oehring
9,611,728	B2	4/2017	Oehring
9,650,871	B2	5/2017	Oehring et al.
9,650,879	B2	5/2017	Broussard et al.
9,706,185	B2	7/2017	Ellis
9,728,354	B2	8/2017	Skolozdra
9,738,461	B2	8/2017	DeGaray
9,739,546	B2	8/2017	Bertilsson et al.
9,745,840	B2	8/2017	Oehring et al.
9,840,901	B2	12/2017	Oehring et al.
9,863,228	B2	1/2018	Shampine et al.
9,893,500	B2	2/2018	Oehring
9,909,398	B2	3/2018	Pham
9,915,128	B2	3/2018	Hunter
9,932,799	B2	4/2018	Symchuk
9,963,961	B2	5/2018	Hardin
9,970,278	B2	5/2018	Broussard
9,976,351	B2	5/2018	Randall
9,995,218	B2	6/2018	Oehring
10,008,880	B2	6/2018	Vicknair
10,020,711	B2	7/2018	Oehring
10,036,238	B2	7/2018	Oehring
10,107,086	B2	10/2018	Oehring
10,119,381	B2	11/2018	Oehring
10,184,465	B2	1/2019	Enis et al.
10,196,878	B2	2/2019	Hunter
10,221,639	B2	3/2019	Romer et al.
10,227,854	B2	3/2019	Glass
10,232,332	B2	3/2019	Oehring
10,246,984	B2	4/2019	Payne
10,254,732	B2	4/2019	Oehring
10,260,327	B2	4/2019	Kajaria
10,280,724	B2	5/2019	Hinderliter
10,287,873	B2	5/2019	Filas
10,302,079	B2	5/2019	Kendrick
10,309,205	B2	6/2019	Randall
10,337,308	B2	7/2019	Broussard
10,371,012	B2	8/2019	Davis
10,378,326	B2	8/2019	Morris
10,393,108	B2	8/2019	Chong
10,407,990	B2	9/2019	Oehring
10,408,030	B2	9/2019	Oehring et al.
10,408,031	B2	9/2019	Oehring et al.
10,415,332	B2	9/2019	Morris
10,436,026	B2	10/2019	Ounadjela
10,627,003	B2	4/2020	Dale et al.
10,669,471	B2	6/2020	Schmidt et al.
10,669,804	B2	6/2020	Kotrla
10,695,950	B2	6/2020	Igo et al.
10,711,576	B2	7/2020	Bishop
10,740,730	B2	8/2020	Altamirano et al.
2001/0000996	A1	5/2001	Grimland et al.
2002/0169523	A1	11/2002	Ross et al.
2003/0079875	A1	1/2003	Weng
2003/0056514	A1	3/2003	Lohn
2003/0138327	A1	7/2003	Jones et al.
2004/0040746	A1	3/2004	Niedermayr et al.
2004/0102109	A1	5/2004	Cratty et al.
2004/0167738	A1	8/2004	Miller
2005/0061548	A1	3/2005	Hooper
2005/0116541	A1	6/2005	Seiver
2005/0201197	A1	9/2005	Duell et al.
2005/0274508	A1	12/2005	Folk
2006/0052903	A1	3/2006	Bassett
2006/0065319	A1	3/2006	Csitari
2006/0109141	A1	5/2006	Huang
2007/0125544	A1*	6/2007	Robinson E21B 43/26 166/308.3
2007/0131410	A1	6/2007	Hill
2007/0187163	A1	8/2007	Cone
2007/0201305	A1	8/2007	Heilman et al.
2007/0226089	A1	9/2007	DeGaray et al.
2007/0277982	A1	12/2007	Shampine
2007/0278140	A1	12/2007	Mallet et al.
2008/0017369	A1	1/2008	Sarada
2008/0041596	A1	2/2008	Blount
2008/0095644	A1	4/2008	Mantel et al.
2008/0112802	A1	5/2008	Orlando
2008/0137266	A1	6/2008	Jensen
2008/0164023	A1	7/2008	Dykstra et al.
2008/0208478	A1	8/2008	Ella et al.
2008/0217024	A1	9/2008	Moore
2008/0257449	A1	10/2008	Weinstein et al.
2008/0264625	A1	10/2008	Ochoa
2008/0264649	A1	10/2008	Crawford
2008/0277120	A1	11/2008	Hickie
2009/0045782	A1	2/2009	Datta
2009/0065299	A1	3/2009	Vito
2009/0078410	A1	3/2009	Krenek et al.
2009/0093317	A1	4/2009	Kajiwara et al.
2009/0095482	A1	4/2009	Surjaatmadja
2009/0145611	A1	6/2009	Pallini, Jr.
2009/0153354	A1	6/2009	Daussin et al.
2009/0188181	A1	7/2009	Forbis
2009/0200035	A1	8/2009	Bjerkreim et al.
2009/0260826	A1	10/2009	Sherwood
2009/0308602	A1	12/2009	Bruins et al.
2010/0000508	A1	1/2010	Chandler
2010/0019574	A1	1/2010	Baldassarre et al.
2010/0038907	A1	2/2010	Hunt
2010/0045109	A1	2/2010	Arnold
2010/0051272	A1	3/2010	Loree et al.
2010/0132949	A1	6/2010	DeFosse et al.
2010/0146981	A1	6/2010	Motakef
2010/0172202	A1	7/2010	Borgstadt
2010/0250139	A1	9/2010	Hobbs et al.
2010/0293973	A1	11/2010	Erickson
2010/0303655	A1	12/2010	Scekic
2010/0322802	A1	12/2010	Kugelev
2011/0005757	A1	1/2011	Hebert
2011/0017468	A1	1/2011	Birch et al.
2011/0052423	A1	3/2011	Gambier et al.
2011/0061855	A1	3/2011	Case et al.

(56) **References Cited**

U.S. PATENT DOCUMENTS

2011/0081268	A1	4/2011	Ochoa et al.
2011/0085924	A1	4/2011	Shampine
2011/0110793	A1	5/2011	Leugemores et al.
2011/0166046	A1	7/2011	Weaver
2011/0247878	A1	10/2011	Rasheed
2011/0272158	A1	11/2011	Neal
2012/0018016	A1	1/2012	Gibson
2012/0049625	A1	3/2012	Hopwood
2012/0063936	A1	3/2012	Baxter et al.
2012/0085541	A1	4/2012	Love et al.
2012/0127635	A1	5/2012	Grindeland
2012/0150455	A1	6/2012	Franklin et al.
2012/0152716	A1	6/2012	Kikukawa et al.
2012/0205301	A1	8/2012	McGuire et al.
2012/0205400	A1	8/2012	DeGaray et al.
2012/0222865	A1	9/2012	Larson
2012/0232728	A1	9/2012	Karimi et al.
2012/0247783	A1	10/2012	Berner, Jr.
2012/0255734	A1	10/2012	Coli et al.
2013/0009469	A1	1/2013	Gillett
2013/0025706	A1	1/2013	DeGaray et al.
2013/0175038	A1	7/2013	Conrad
2013/0175039	A1	7/2013	Guidry
2013/0180722	A1	7/2013	Olarte Caro et al.
2013/0189629	A1	7/2013	Chandler
2013/0199617	A1	8/2013	DeGaray et al.
2013/0233542	A1	9/2013	Shampine
2013/0255271	A1	10/2013	Yu et al.
2013/0284278	A1	10/2013	Winborn
2013/0284455	A1	10/2013	Kajaria et al.
2013/0299167	A1	11/2013	Fordyce et al.
2013/0306322	A1	11/2013	Sanborn et al.
2013/0317750	A1	11/2013	Hunter
2013/0341029	A1	12/2013	Roberts et al.
2013/0343858	A1	12/2013	Flusche
2014/0000899	A1	1/2014	Nevison
2014/0010671	A1	1/2014	Cryer et al.
2014/0054965	A1	2/2014	Jain
2014/0060658	A1	3/2014	Hains
2014/0095114	A1	4/2014	Thomeer
2014/0096974	A1	4/2014	Coll
2014/0124162	A1	5/2014	Leavitt
2014/0138079	A1	5/2014	Broussard et al.
2014/0174717	A1	6/2014	Broussard et al.
2014/0219824	A1	8/2014	Burnette
2014/0238683	A1	8/2014	Korach
2014/0246211	A1	9/2014	Guidry et al.
2014/0251623	A1	9/2014	Lestz et al.
2014/0255214	A1	9/2014	Burnette
2014/0277772	A1	9/2014	Lopez
2014/0290768	A1	10/2014	Randle
2014/0379300	A1	12/2014	Devine et al.
2015/0027712	A1	1/2015	Vicknair
2015/0053426	A1	2/2015	Smith
2015/0068724	A1	3/2015	Coli et al.
2015/0068754	A1	3/2015	Coli et al.
2015/0075778	A1	3/2015	Walters
2015/0083426	A1	3/2015	Lesko
2015/0097504	A1	4/2015	Lamascus
2015/0114652	A1	4/2015	Lestz
2015/0136043	A1	5/2015	Shaaban
2015/0144336	A1	5/2015	Hardin et al.
2015/0147194	A1	5/2015	Foote
2015/0159911	A1	6/2015	Holt
2015/0175013	A1	6/2015	Cryer et al.
2015/0176386	A1	6/2015	Castillo et al.
2015/0211512	A1	7/2015	Wiegman
2015/0211524	A1	7/2015	Broussard
2015/0217672	A1	8/2015	Shampine
2015/0225113	A1	8/2015	Lungu
2015/0233530	A1	8/2015	Sandidge
2015/0252661	A1	9/2015	Glass
2015/0300145	A1	10/2015	Coli et al.
2015/0300336	A1	10/2015	Hernandez et al.
2015/0314225	A1	11/2015	Coli et al.
2015/0330172	A1	11/2015	Allmaras
2015/0354322	A1	12/2015	Vicknair
2016/0032703	A1	2/2016	Broussard et al.
2016/0102537	A1	4/2016	Lopez
2016/0105022	A1	4/2016	Oehring
2016/0208592	A1	4/2016	Oehring
2016/0160889	A1	6/2016	Hoffman et al.
2016/0177675	A1	6/2016	Morris et al.
2016/0177678	A1	6/2016	Morris
2016/0186531	A1	6/2016	Harkless et al.
2016/0208593	A1	7/2016	Coli et al.
2016/0208594	A1	7/2016	Coli et al.
2016/0208595	A1	7/2016	Tang
2016/0221220	A1	8/2016	Paige
2016/0230524	A1	8/2016	Dumoit
2016/0230525	A1	8/2016	Lestz et al.
2016/0258267	A1	9/2016	Payne et al.
2016/0265457	A1	9/2016	Stephenson
2016/0273328	A1	9/2016	Oehring
2016/0273456	A1	9/2016	Zhang et al.
2016/0281484	A1	9/2016	Lestz
2016/0290114	A1	10/2016	Oehring
2016/0290563	A1	10/2016	Diggins
2016/0312108	A1	10/2016	Lestz et al.
2016/0319650	A1	11/2016	Oehring
2016/0326853	A1	11/2016	Fred et al.
2016/0326854	A1	11/2016	Broussard
2016/0326855	A1	11/2016	Coli et al.
2016/0341281	A1	11/2016	Brunvold et al.
2016/0348479	A1	12/2016	Oehring
2016/0349728	A1	12/2016	Oehring
2016/0369609	A1	12/2016	Morris et al.
2017/0016433	A1	1/2017	Chong
2017/0021318	A1	1/2017	McIver et al.
2017/0022788	A1	1/2017	Oehring et al.
2017/0022807	A1	1/2017	Dursun
2017/0028368	A1	2/2017	Oehring et al.
2017/0030177	A1	2/2017	Oehring
2017/0030178	A1	2/2017	Oehring et al.
2017/0036178	A1	2/2017	Coli et al.
2017/0036872	A1	2/2017	Wallace
2017/0037717	A1	2/2017	Oehring
2017/0037718	A1	2/2017	Coli et al.
2017/0043280	A1	2/2017	Vankouwenberg
2017/0051732	A1	2/2017	Hemandez et al.
2017/0074076	A1	3/2017	Joseph et al.
2017/0082033	A1	3/2017	Wu et al.
2017/0096885	A1	4/2017	Oehring
2017/0096889	A1	4/2017	Blanckaert et al.
2017/0104389	A1	4/2017	Morris et al.
2017/0114625	A1	4/2017	Norris
2017/0130743	A1	5/2017	Anderson
2017/0138171	A1	5/2017	Richards et al.
2017/0145918	A1	5/2017	Oehring
2017/0146189	A1	5/2017	Herman
2017/0159570	A1	6/2017	Bickert
2017/0159654	A1	6/2017	Kendrick
2017/0175516	A1	6/2017	Eslinger
2017/0204852	A1	7/2017	Barnett
2017/0212535	A1	7/2017	Shelman et al.
2017/0218727	A1	8/2017	Oehring
2017/0218843	A1	8/2017	Oehring
2017/0222409	A1	8/2017	Oehring
2017/0226838	A1	8/2017	Ceizobka et al.
2017/0226839	A1	8/2017	Broussard
2017/0226842	A1	8/2017	Omont et al.
2017/0234250	A1	8/2017	Janik
2017/0241221	A1	8/2017	Seshadri
2017/0259227	A1	9/2017	Morris et al.
2017/0292513	A1	10/2017	Haddad
2017/0313499	A1	11/2017	Hughes et al.
2017/0314380	A1	11/2017	Oehring
2017/0314979	A1	11/2017	Ye et al.
2017/0328179	A1	11/2017	Dykstra
2017/0369258	A1	12/2017	DeGaray
2017/0370639	A1	12/2017	Barden et al.
2018/0028992	A1	2/2018	Stegemoeller
2018/0038216	A1	2/2018	Zhang
2018/0045331	A1	2/2018	Lopez

(56) **References Cited**

U.S. PATENT DOCUMENTS

2018/0090914	A1	3/2018	Johnson et al.
2018/0156210	A1	6/2018	Oehring
2018/0181830	A1	6/2018	Luharuka et al.
2018/0183219	A1	6/2018	Oehring
2018/0216455	A1	8/2018	Andreychuk
2018/0238147	A1	8/2018	Shahri
2018/0245428	A1	8/2018	Richards
2018/0258746	A1	9/2018	Broussard
2018/0259080	A1	9/2018	Dale et al.
2018/0266217	A1	9/2018	Funkhauser et al.
2018/0266412	A1	9/2018	Stokkevag
2018/0274446	A1	9/2018	Oehring
2018/0284817	A1	10/2018	Cook et al.
2018/0291713	A1	10/2018	Jeanson
2018/0298731	A1	10/2018	Bishop
2018/0312738	A1	11/2018	Rutsch et al.
2018/0313677	A1	11/2018	Warren et al.
2018/0320483	A1	11/2018	Zhang
2018/0343125	A1	11/2018	Clish
2018/0363437	A1	12/2018	Coli
2019/0003329	A1	1/2019	Morris
2019/0010793	A1	1/2019	Hinderliter
2019/0040727	A1	2/2019	Oehring et al.
2019/0063309	A1	2/2019	Davis
2019/0100989	A1	4/2019	Stewart
2019/0112910	A1	4/2019	Oehring
2019/0119096	A1	4/2019	Haile
2019/0120024	A1	4/2019	Oehring
2019/0128080	A1	5/2019	Ross
2019/0128104	A1	5/2019	Graham et al.
2019/0145251	A1	5/2019	Johnson
2019/0154020	A1	5/2019	Glass
2019/0162061	A1	5/2019	Stephenson
2019/0169971	A1	6/2019	Oehring
2019/0178057	A1	6/2019	Hunter
2019/0178235	A1	6/2019	Coskrey
2019/0203567	A1	7/2019	Ross
2019/0203572	A1	7/2019	Morris
2019/0211661	A1	7/2019	Reckels
2019/0226317	A1	7/2019	Payne
2019/0245348	A1	8/2019	Hinderliter
2019/0249527	A1	8/2019	Kraynek
2019/0257462	A1	8/2019	Rogers
2019/0292866	A1	9/2019	Ross
2019/0292891	A1	9/2019	Kajaria
2019/0316447	A1	10/2019	Oehring
2020/0047141	A1	2/2020	Oehring et al.
2020/0088152	A1	3/2020	Allion et al.
2020/0232454	A1	7/2020	Chretien

FOREIGN PATENT DOCUMENTS

CA	2482943		5/2011
CA	3050131		11/2011
CA	2955706		10/2012
CA	2966672		10/2012
CA	3000322		4/2013
CA	2787814		2/2014
CA	2833711		5/2014
CA	2978706		9/2016
CA	2944980		2/2017
CA	3006422		6/2017
CA	3018485		8/2017
CA	2964593		10/2017
CA	2849825		7/2018
CA	3067854	A1	1/2019
CA	2919649		2/2019
CA	2919666		7/2019
CA	2797081		9/2019
CA	2945579		10/2019
CN	101977016		2/2011
CN	104117308	A	10/2014
CN	104196613	A	12/2014
CN	205986303	U	2/2017
CN	108049999	A	5/2018
CN	112196508	A	1/2021
JP	2004264589		9/2004
WO	2016/144939		9/2016
WO	2016/160458		10/2016
WO	2018044307	A1	3/2018
WO	2018213925	A1	11/2018

OTHER PUBLICATIONS

Notice of Allowance dated Jan. 9, 2020 in related U.S. Appl. No. 16/570,331.
Non-Final Office Action dated Dec. 23, 2019 in related U.S. Appl. No. 16/597,008.
Non-Final Office Action dated Jan. 10, 2020 in related U.S. Appl. No. 16/597,014.
Non-Final Office Action dated Dec. 6, 2019 in related U.S. Appl. No. 16/564,186.
International Search Report and Written Opinion dated Nov. 26, 2019 in related PCT Application No. PCT/US19/51018.
International Search Report and Written Opinion dated Feb. 11, 2020 in related PCT Application No. PCT/US2019/055323.
Non-Final Office Action issued in corresponding U.S. Appl. No. 16/170,695 dated Jun. 7, 2019.
Non-Final Office Action issued in corresponding U.S. Appl. No. 16/268,030 dated May 10, 2019.
Final Office Action issued in corresponding U.S. Appl. No. 16/210,749 dated Jun. 11, 2019.
Canadian Office Action dated May 30, 2019 in corresponding CA Application No. 2,833,711.
Canadian Office Action dated Jun. 20, 2019 in corresponding CA Application No. 2,964,597.
International Search Report and Written Opinion dated Jul. 9, 2019 in corresponding PCT Application No. PCT/US2019/027584.
Office Action dated Jun. 11, 2019 in corresponding U.S. Appl. No. 16/210,749.
Office Action dated May 10, 2019 in corresponding U.S. Appl. No. 16/268,030.
Office Action dated Jun. 7, 2019 in corresponding U.S. Appl. No. 16/268,030.
International Search Report and Written Opinion dated Sep. 11, 2019 in related PCT Application No. PCT/US2019/037493.
Office Action dated Aug. 19, 2019 in related U.S. Appl. No. 15/356,436.
Office Action dated Oct. 2, 2019 in related U.S. Appl. No. 16/152,732.
Office Action dated Sep. 11, 2019 in related U.S. Appl. No. 16/268,030.
Office Action dated Oct. 11, 2019 in related U.S. Appl. No. 16/385,070.
Office Action dated Sep. 3, 2019 in related U.S. Appl. No. 15/994,772.
Office Action dated Sep. 20, 2019 in related U.S. Appl. No. 16/443,273.
Canadian Office Action dated Oct. 1, 2019 in related Canadian Patent Application No. 2,936,997.
Final Office Action dated Mar. 31, 2020 corresponding to U.S. Appl. No. 15/356,436.
Non-Final Office Action dated Mar. 3, 2020 corresponding to U.S. Appl. No. 16/152,695.
UK Power Networks—Transformers to Supply Heat to Tate Modern—from Press Releases May 16, 2013.
Non-Final Office Action issued in corresponding U.S. Appl. No. 15/293,681 dated Feb. 16, 2017.
Non-Final Office Action issued in corresponding U.S. Appl. No. 15/294,349 dated Mar. 14, 2017.
Final Office Action issued in corresponding U.S. Appl. No. 15/145,491 dated Jan. 20, 2017.
Non-Final Office Action issued in corresponding U.S. Appl. No. 15/145,443 dated Feb. 7, 2017.
Notice of Allowance issued in corresponding U.S. Appl. No. 15/217,040 dated Mar. 28, 2017.
Notice of Allowance issued in corresponding U.S. Appl. No. 14/622,532 dated Mar. 27, 2017.
Non-Final Office Action issued in corresponding U.S. Appl. No. 15/291,842 dated Jan. 6, 2017.

(56) **References Cited**

OTHER PUBLICATIONS

Final Office Action issued in corresponding U.S. Appl. No. 14/622,532 dated Dec. 7, 2016.
Non-Final Office Action issued in corresponding U.S. Appl. No. 14/622,532 dated May 17, 2016.
Final Office Action issued in corresponding U.S. Appl. No. 14/622,532 dated Dec. 21, 2015.
Non-Final Office Action issued in corresponding U.S. Appl. No. 14/622,532 dated Aug. 5, 2015.
Non-Final Office Action issued in corresponding U.S. Appl. No. 15/145,491 dated Sep. 12, 2016.
Non-Final Office Action issued in corresponding U.S. Appl. No. 15/217,040 dated Nov. 29, 2016.
Non-Final Office Action issued in corresponding U.S. Appl. No. 15/235,788 dated Dec. 14, 2016.
Non-Final Office Action issued in corresponding U.S. Appl. No. 15/145,491 dated May 15, 2017.
Non-Final Office Action issued in corresponding U.S. Appl. No. 15/486,970 dated Jun. 22, 2017.
Non-Final Office Action issued in corresponding U.S. Appl. No. 15/487,656 dated Jun. 23, 2017.
Non-Final Office Action issued in corresponding U.S. Appl. No. 15/487,694 dated Jun. 26, 2017.
Final Office Action issued in corresponding U.S. Appl. No. 15/294,349 dated Jul. 6, 2017.
Non-Final Office Action issued in corresponding U.S. Appl. No. 14/884,363 dated Sep. 5, 2017.
Final Office Action issued in corresponding U.S. Appl. No. 15/145,491 dated Sep. 6, 2017.
Non-Final Office Action issued in corresponding U.S. Appl. No. 14/881,535 dated Oct. 6, 2017.
Non-Final Office Action issued in corresponding U.S. Appl. No. 15/145,414 dated Nov. 29, 2017.
Non-Final Office Action issued in corresponding U.S. Appl. No. 15/644,487 dated Nov. 13, 2017.
Canadian Office Action dated Mar. 2, 2018 in related Canadian Patent Application No. 2,833,711.
Office Action dated Apr. 10, 2018 in related U.S. Appl. No. 15/294,349.
Office Action dated Apr. 2, 2018 in related U.S. Appl. No. 15/183,387.
Office Action dated May 29, 2018 in related U.S. Appl. No. 15/235,716.
Candian Office Action dated Apr. 18, 2018 in related Canadian Patent Application No. 2,928,711.
Canadian Office Action dated Jun. 22, 2018 in related Canadian Patent Application No. 2,886,697.
Office Action dated Jul. 25, 2018 in related U.S. Appl. No. 15/644,487.
Office Action dated Oct. 4, 2018 in related U.S. Appl. No. 15/217,081.
International Search Report and Written Opinion dated Sep. 19, 2018 in related PCT Patent Application No. PCT/US2018/040683.
Canadian Office Action dated Sep. 28, 2018 in related Canadian Patent Application No. 2,945,281.
Office Action dated Dec. 12, 2018 in related U.S. Appl. No. 16/160,708.
International Search Report and Written Opinion dated Jan. 2, 2019 in related PCT Patent Application No. PCT/US18/54542.
International Search Report and Written Opinion dated Jan. 2, 2019 in related PCT Patent Application No. PCT/US18/54548.
International Search Report and Written Opinion dated Dec. 31, 2018 in related PCT Patent Application No. PCT/US18/55913.
International Search Report and Written Opinion dated Jan. 4, 2019 in related PCT Patent Application No. PCT/US18/57539.
Non-Final Office Action dated Feb. 12, 2019 in related U.S. Appl. No. 16/170,695.
International Search Report and Written Opinion dated Feb. 15, 2019 in related PCT Patent Application No. PCT/US18/63977.
International Search Report and Written Opinion dated Mar. 5, 2019 in related PCT Patent Application No. PCT/US18/63970.
Non-Final Office Action dated Feb. 25, 2019 in related U.S. Appl. No. 16/210,749.
Non-Final Office Action dated Mar. 6, 2019 in related U.S. Appl. No. 15/183,387.
Office Action dated Jan. 30, 2019 in related Canadian Patent Application No. 2,936,997.
Office Action dated Mar. 1, 2019 in related Canadian Patent Application No. 2,943,275.
International Search Report and Written Opinion dated Apr. 10, 2019 in corresponding PCT Application No. PCT/US2019/016635.
Notice of Allowance dated Apr. 23, 2019 in corresponding U.S. Appl. No. 15/635,028.
Non-Final Office Action issued in U.S. Appl. No. 14/881,535 dated May 20, 2020.
Non-Final Office Action issued in U.S. Appl. No. 15/145,443 dated May 8, 2020.
Non-Final Office Action issued in U.S. Appl. No. 16/458,696 dated May 22, 2020.
International Search Report and Written Opinion issued in PCT/US2020/023809 dated Jun. 2, 2020.
Karin, "Duel Fuel Diesel Engines," (2015), Taylor & Francis, pp. 62-63, Retrieved from https://app.knovel.com/hotlink/toc/id:kpDFDE0001/dual-fueal-diesel-engines/duel-fuel-diesel-engines (Year 2015).
Goodwin, "High-voltage auxilliary switchgear for power stations," Power Engineering Journal, 1989, 10 pg. (Year 1989).
Canadian Office Action dated Aug. 17, 2020 in related CA Patent Application No. 2,944,968.
International Search Report and Written Opinion dated Jun. 23, 2020 in corresponding PCT Application No. PCT/US20/23912.
International Search Report and Written Opinion dated Jul. 22, 2020 in corresponding PCT Application No. PCT/US20/00017.
Office Action dated Aug. 4, 2020 in related U.S. Appl. No. 16/385,070.
Office Action dated Jun. 29, 2020 in related U.S. Appl. No. 16/404,283.
Office Action dated Jun. 29, 2020 in related U.S. Appl. No. 16/728,359.
Office Action dated Jun. 22, 2020 in related U.S. Appl. No. 16/377,861.
Canadian Office Action dated Aug. 18, 2020 in related CA Patent Application No. 2,933,444.
Non-Final Office dated Oct. 26, 2020 in U.S. Appl. No. 15/356,436.
Non-Final Office dated Oct. 5, 2020 in U.S. Appl. No. 16/443,273.
Non-Final Office Action dated Sep. 29, 2020 in U.S. Appl. No. 16/943,727.
Non-Final Office Action dated Sep. 2, 2020 in U.S. Appl. No. 16/356,263.
Non-Final Office Action dated Aug. 31, 2020 in U.S. Appl. No. 16/167,083.
Albone, "Mobile Compressor Stations for Natural Gas Transmission Service," ASME 67-GT-33, Turbo Expo, Power for Land, Sea and Air, vol. 79887, p. 1-10, 1967.
Canadian Office Action dated Sep. 22, 2020 in Canadian Application No. 2,982,974.
International Search Report and Written Opinion dated Sep. 3, 2020 in PCT/US2020/36932.
"Process Burner" (https://www.cebasrt.com/productsloii-gaslprocess-burner) 06 Sep. 6, 2018 (Sep. 6, 2018), entire document, especially para (Burners for refinery Heaters].
Water and Glycol Heating Systems• (https://www.heat-inc.com/wg-series-water-glycol-systems/) Jun. 18, 2018 (Jun. 18, 2018), entire document, especially WG Series Water Glycol Systems.
"Heat Exchanger" (https://en.wikipedia.org/w/index.php?title=Heat_exchanger&oldid=89300146) Dec. 18, 2019 Apr. 2019 (Apr. 18, 2019), entire document, especially para (0001].
Canadian Office Action dated Sep. 8, 2020 in Canadian Patent Application No. 2,928,707.
Canadian Office Action dated Aug. 31, 2020 in Canadian Patent Application No. 2,944,980.
International Search Report and Written Opinion dated Aug. 28, 2020 in PCT/US20/23821.
Morris et al., U.S. Appl. No. 62/526,869; Hydration-Blender Transport and Electric Power Distribution for Fracturing Operation; Jun. 28, 2018; USPTO; see entire document.
Final Office Action dated Feb. 4, 2021 in U.S. Appl. No. 16/597,014.

(56) **References Cited**

OTHER PUBLICATIONS

International Search Report and Written Opinion dated Feb. 4, 2021 in PCT/US20/59834.
International Search Report and Written Opinion dated Feb. 2, 2021 in PCT/US20/58906.
International Search Report and Written Opinion dated Feb. 3, 2021 in PCT/US20/58899.
Non-Final Office Action dated Jan. 29, 2021 in U.S. Appl. No. 16/564,185.
Final Office Action dated Jan. 21, 2021 in U.S. Appl. No. 16/458,696.
Final Office Action dated Jan. 11, 2021 in U.S. Appl. No. 16/404,283.
Non-Final Office Action dated Jan. 4, 2021 in U.S. Appl. No. 16/522,043.
International Search Report and Written Opinion dated Dec. 14, 2020 in PCT/US2020/53980.
International Search Report and Written Opinion mailed in PCT/US20/67526 dated May 6, 2021.
International Search Report and Written Opinion mailed In PCT/US20/67608 dated Mar. 30, 2021.
International Search Report and Written Opinion mailed In PCT/US20/67528 dated Mar. 19, 2021.
International Search Report and Written Opinion mailed in PCT/US20/67146 dated Mar. 29, 2021.
International Search Report and Written Opinion mailed in PCT/US20/67523 dated Mar. 22, 2021.
International Search Report and Written Opinion mailed in PCT/US20/67523 dated May 11, 2021.

* cited by examiner

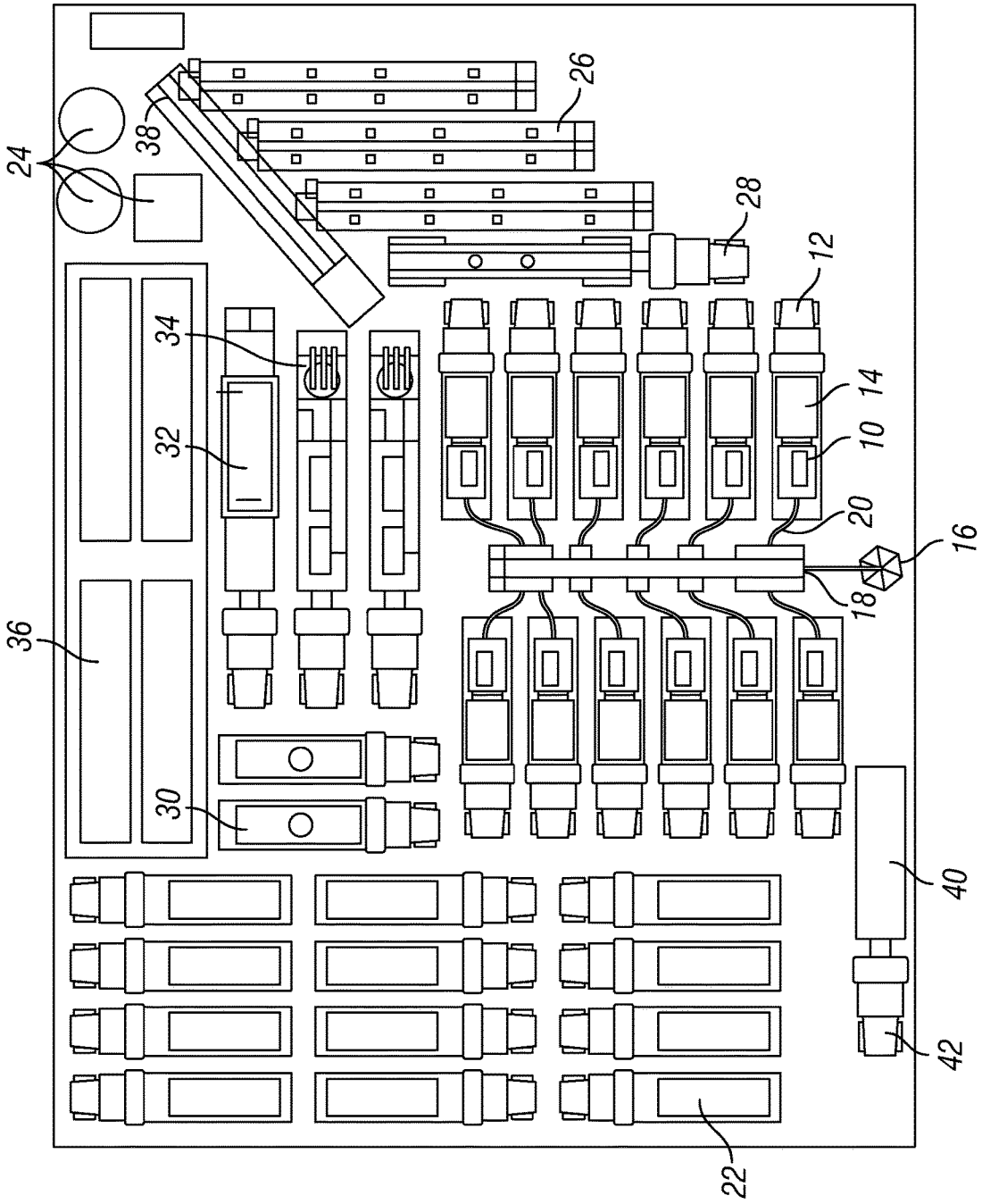

FIG. 1

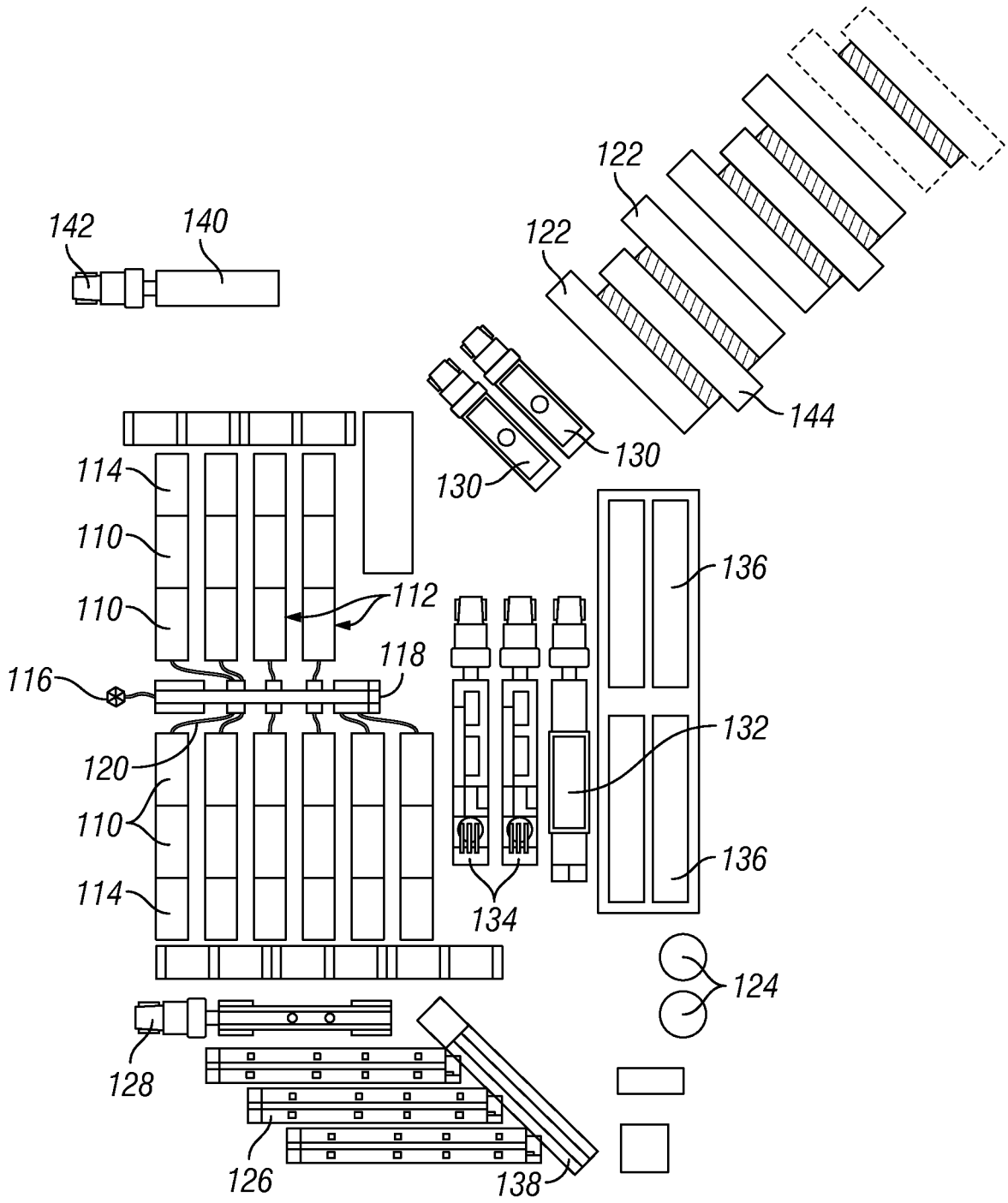
142
140
122
122
144
130
130
114
110
110
112
118
116
120
110
114
136
132
136
134
124
128
126
138

FIG. 2

SYSTEM FOR PUMPING HYDRAULIC FRACTURING FLUID USING ELECTRIC PUMPS

CROSS-REFERENCE TO RELATED APPLICATIONS

This application is a continuation of U.S. patent application Ser. No. 15/202,085, filed Jul. 5, 2016, titled "SYSTEM FOR PUMPING HYDRAULIC FRACTURING FLUID USING ELECTRIC PUMPS," now U.S. Pat. No. 10,337,308, issued Jul. 2, 2019, which is a continuation of U.S. patent application Ser. No. 13/679,689, filed Nov. 16, 2012, titled "SYSTEM FOR PUMPING HYDRAULIC FRACTURING FLUID USING ELECTRIC PUMPS," now U.S. Pat. No. 9,410,410, issued Aug. 9, 2016, the full disclosure of which is incorporated herein by reference in its entirety.

BACKGROUND OF THE INVENTION

1. Field of the Invention

This technology relates to hydraulic fracturing in oil and gas wells. In particular, this technology relates to pumping fracturing fluid into an oil or gas well using pumps powered by electric motors.

2. Brief Description of Related Art

Hydraulic fracturing has been used for decades to stimulate production from conventional oil and gas wells. The practice consists of pumping fluid into a wellbore at high pressure. Inside the wellbore, the fluid is forced into the formation being produced. When the fluid enters the formation, it fractures, or creates fissures, in the formation. Water, as well as other fluids, and some solid proppants, are then pumped into the fissures to stimulate the release of oil and gas from the formation.

Fracturing rock in a formation requires that the fracture fluid be pumped into the wellbore at very high pressure. This pumping is typically performed by large diesel-powered pumps. Such pumps are able to pump fracturing fluid into a wellbore at a high enough pressure to crack the formation, but they also have drawbacks. For example, the diesel pumps are very heavy, and thus must be moved on heavy duty trailers, making transport of the pumps between oilfield sites expensive and inefficient. In addition, the diesel engines required to drive the pumps require a relatively high level of expensive maintenance. Furthermore, the cost of diesel fuel is much higher than in the past, meaning that the cost of running the pumps has increased.

What is needed therefore, is a pump system for hydraulic fracturing fluid that overcomes the problems associated with diesel pumps.

SUMMARY OF THE INVENTION

Disclosed herein is a system for hydraulically fracturing an underground formation in an oil or gas well to extract oil or gas from the formation, the oil or gas well having a wellbore that permits passage of fluid from the wellbore into the formation. The system includes a plurality of electric pumps fluidly connected to the well, and configured to pump fluid into the wellbore at high pressure so that the fluid passes from the wellbore into the formation, and fractures the formation. The system also includes a plurality of generators electrically connected to the plurality of electric

pumps to provide electrical power to the pumps. At least some of the plurality of generators can be powered by natural gas. In addition, at least some of the plurality of generators can be turbine generators.

In one embodiment, the system further includes an A/C console and a variable frequency drive that controls the speed of the pumps. Furthermore, the electric pumps, as well as the electric generators, can be mounted on vehicles, and can be ported from one well to another. The vehicles can be trucks and can have at least five axles.

Further disclosed herein is a system for fracturing a rock formation in an oil or gas well by pumping hydraulic fracturing fluid into the well that includes a pump, an electric motor, a variable frequency drive, and a natural gas powered electric generator. The pump is configured for pumping the hydraulic fracturing fluid into the well, and then from the well into the formation, and is capable of pumping the hydraulic fracturing fluid at high pressure to crack the formation. The electric motor can have a high-strength steel or steel alloy shaft attached to the pump and configured to drive the pump. The variable frequency drive can be connected to the electric motor to control the speed of the motor. In addition, the natural gas powered generator, which can be a turbine generator, can be connected to the electric motor and provide electric power to the electric motor.

In one embodiment, the pump can be a triplex or a quinteplex pump, optionally rated at about 2250 hydraulic horsepower or more. In addition, the pump can also have 4.5 inch diameter plungers with an eight inch stroke. In another embodiment, the electric motor can have a maximum continuous power output of about 1500 brake horsepower, 1750 brake horsepower, or more, and a maximum continuous torque of about 8750 lb-ft or more. Furthermore, the electric motor can have a high temperature rating of about 375 degrees F. or more, and a shaft composed of 4340 alloy steel.

In another embodiment, variable frequency drive can frequently perform electric motor diagnostics to prevent damage to the electric motor if it becomes grounded or shorted. In addition, the variable frequency drive can include power semiconductor heat sinks having one or more thermal sensors monitored by a microprocessor to prevent semiconductor damage caused by excessive heat.

Also disclosed herein is a system for hydraulically fracturing an underground formation in an oil or gas well to extract oil or gas from the formation, the oil or gas well having a wellbore that permits passage of fluid from the wellbore into the formation. The system includes a trailer for attachment to a truck. The system may include any mobile platform. Two or more electric pumps can be attached to the trailer and are fluidly connected to the well, the electric pumps configured to pump fluid into the wellbore at high pressure so that the fluid passes from the wellbore into the formation, and fractures the formation. One or more electric motors are attached to the electric pumps to drive the pumps. The electric motors can also be attached to the trailer. A natural gas powered generator is provided for connection to the electric motor to provide electric power to the electric motor. The system of claim can further include a variable frequency drive attached to the trailer and connected to the electric motor to control the speed of the motor. In addition, the system can include a skid to which at least one of the electric pumps, the one or more electric motors, and the variable frequency drives are attached.

Also disclosed herein is a process for stimulating an oil or gas well by hydraulically fracturing a formation in the well. The process includes the steps of pumping fracturing fluid into the well with an electrically powered pump at a high

pressure so that the fracturing fluid enters and cracks the formation, the fracturing fluid having at least a liquid component and a solid proppant, and inserting the solid proppant into the cracks to maintain the cracks open, thereby allowing passage of oil and gas through the cracks. The process can further include powering the electrically powered pump with a natural gas generator, such as, for example, a turbine generator.

BRIEF DESCRIPTION OF THE DRAWINGS

The present technology will be better understood on reading the following detailed description of nonlimiting embodiments thereof, and on examining the accompanying drawing, in which:

FIG. **1** is a schematic plan view of equipment used in a hydraulic fracturing operation, according to an embodiment of the present technology; and

FIG. **2** is a schematic plan view of equipment used in a hydraulic fracturing operation, according to an alternate embodiment of the present technology.

DETAILED DESCRIPTION OF THE PREFERRED EMBODIMENT

The foregoing aspects, features, and advantages of the present technology will be further appreciated when considered with reference to the following description of preferred embodiments and accompanying drawing, wherein like reference numerals represent like elements. In describing the preferred embodiments of the technology illustrated in the appended drawing, specific terminology will be used for the sake of clarity. However, the technology is not intended to be limited to the specific terms used, and it is to be understood that each specific term includes equivalents that operate in a similar manner to accomplish a similar purpose.

FIG. **1** shows a plan view of equipment used in a hydraulic fracturing operation. Specifically, there is shown a plurality of pumps **10** mounted to pump vehicles **12**. The pump vehicles **12** can be trucks having at least five axles. In the embodiment shown, the pumps **10** are powered by electric motors **14**, which can also be mounted to the pump vehicles **12**. The pumps **10** are fluidly connected to the wellhead **16** via the missile **18**. As shown, the pump vehicles **12** can be positioned near enough to the missile **18** to connect fracturing fluid lines **20** between the pumps **10** and the missile **18**. The missile **18** is then connected to the wellhead **16** and configured to deliver fracturing fluid provided by the pumps **10** to the wellhead **16**.

In some embodiments, each electric motor **14** can be capable of delivering about 1500 brake horsepower (BHP), 1750 BHP, or more, and each pump **10** can optionally be rated for about 2250 hydraulic horsepower (HHP) or more. In addition, the components of the system, including the pumps **10** and the electric motors **14**, can be capable of operating during prolonged pumping operations, and in temperature in a range of about 0 degrees C. or less to about 55 degrees C. or more. In addition, each electric motor **14** can be equipped with a variable frequency drive (VFD), and an A/C console, that controls the speed of the electric motor **14**, and hence the speed of the pump **10**.

The electric motors **14** of the present technology can be designed to withstand an oilfield environment. Specifically, some pumps **10** can have a maximum continuous power output of about 1500 BHP, 1750 BHP, or more, and a maximum continuous torque of about 8750 lb-ft or more. Furthermore, electric motors **14** of the present technology can include class H insulation and high temperature ratings, such as about 375 degrees F. or more. In some embodiments, the electric motor **14** can include a single shaft extension and hub for high tension radial loads, and a high strength 4340 alloy steel shaft, although other suitable materials can also be used.

The VFD can be designed to maximize the flexibility, robustness, serviceability, and reliability required by oilfield applications, such as hydraulic fracturing. For example, as far as hardware is concerned, the VFD can include packaging receiving a high rating by the National Electrical Manufacturers Association (such as nema 1 packaging), and power semiconductor heat sinks having one or more thermal sensors monitored by a microprocessor to prevent semiconductor damage caused by excessive heat. Furthermore, with respect to control capabilities, the VFD can provide complete monitoring and protection of drive internal operations while communicating with an operator via one or more user interfaces. For example, motor diagnostics can be performed frequently (e.g., on the application of power, or with each start), to prevent damage to a grounded or shorted electric motor **14**. The electric motor diagnostics can be disabled, if desired, when using, for example, a low impedance or high-speed electric motor.

In some embodiments, the pump **10** can optionally be a 2250 HHP triplex or quinteplex pump. The pump **10** can optionally be equipped with 4.5 inch diameter plungers that have an eight (8) inch stroke, although other size plungers can be used, depending on the preference of the operator. The pump **10** can further include additional features to increase its capacity, durability, and robustness, including, for example, a 6.353 to 1 gear reduction, autuofrettaged steel or steel alloy fluid end, wing guided slush type valves, and rubber spring loaded packing.

In addition to the above, certain embodiments of the present technology can include a skid (not shown) for supporting some or all of the above-described equipment. For example, the skid can support the electric motor **14** and the pump **10**. In addition, the skid can support the VFD. Structurally, the skid can be constructed of heavy-duty longitudinal beams and cross-members made of an appropriate material, such as, for example, steel. The skid can further include heavy-duty lifting lugs, or eyes, that can optionally be of sufficient strength to allow the skid to be lifted at a single lift point.

Referring back to FIG. **1**, also included in the equipment is a plurality of electric generators **22** that are connected to, and provide power to, the electric motors **14** on the pump vehicles **12**. To accomplish this, the electric generators **22** can be connected to the electric motors **14** by power lines (not shown). The electric generators **22** can be connected to the electric motors **14** via power distribution panels (not shown). In certain embodiments, the electric generators **22** can be powered by natural gas. For example, the generators can be powered by liquefied natural gas. The liquefied natural gas can be converted into a gaseous form in a vaporizer prior to use in the generators. The use of natural gas to power the electric generators **22** can be advantageous because, where the well is a natural gas well, above ground natural gas vessels **24** can already be placed on site to collect natural gas produced from the well. Thus, a portion of this natural gas can be used to power the electric generators **22**, thereby reducing or eliminating the need to import fuel from offsite. If desired by an operator, the electric generators **22** can optionally be natural gas turbine generators, such as those shown in FIG. **2**.

FIG. **1** also shows equipment for transporting and combining the components of the hydraulic fracturing fluid used in the system of the present technology. In many wells, the fracturing fluid contains a mixture of water, sand or other proppant, acid, and other chemicals. Examples of fracturing fluid components include acid, anti-bacterial agents, clay stabilizers, corrosion inhibitors, friction reducers, gelling agents, iron control agents, pH adjusting agents, scale inhibitors, and surfactants. Historically, diesel has at times been used as a substitute for water in cold environments, or where a formation to be fractured is water sensitive, such as, for example, clay. The use of diesel, however, has been phased out over time because of price, and the development of newer, better technologies.

In FIG. **1**, there are specifically shown sand transporting vehicles **26**, an acid transporting vehicle **28**, vehicles for transporting other chemicals **30**, and a vehicle carrying a hydration unit **32**, such as, for example, a water pump. Also shown are fracturing fluid blenders **34**, which can be configured to mix and blend the components of the hydraulic fracturing fluid, and to supply the hydraulic fracturing fluid to the pumps **10**. In the case of liquid components, such as water, acids, and at least some chemicals, the components can be supplied to the blenders **34** via fluid lines (not shown) from the respective component vehicles, or from the hydration unit **32**. In the case of solid components, such as sand, the component can be delivered to the blender **34** by a conveyor belt **38**. The water can be supplied to the hydraulic unit **32** from, for example, water tanks **36** onsite. Alternately, the water can be provided by water trucks. Furthermore, water can be provided directly from the water tanks **36** or water trucks to the blender **34**, without first passing through the hydration unit **32**.

Pump control and data monitoring equipment **40** can be mounted on a control vehicle **42**, and connected to the pumps **10**, electric motors **14**, blenders **34**, and other downhole sensors and tools (not shown) to provide information to an operator, and to allow the operator to control different parameters of the fracturing operation. For example, the pump control and data monitoring equipment **40** can include an A/C console that controls the VFD, and thus the speed of the electric motor **14** and the pump **10**. Other pump control and data monitoring equipment can include pump throttles, a pump VFD fault indicator with a reset, a general fault indicator with a reset, a main estop, a programmable logic controller for local control, and a graphics panel. The graphics panel can include, for example, a touchscreen interface.

Referring now to FIG. **2**, there is shown an alternate embodiment of the present technology. Specifically, there is shown a plurality of pumps **110** which, in this embodiment, are mounted to pump trailers **112**. As shown, the pumps **110** can optionally be loaded two to a trailer **112**, thereby minimizing the number of trailers needed to place the requisite number of pumps at a site. The ability to load two pumps **110** on one trailer **112** is possible because of the relatively light weight of the electric pumps **110** compared to other known pumps, such as diesel pumps. In the embodiment shown, the pumps **110** are powered by electric motors **114**, which can also be mounted to the pump trailers **112**. Furthermore, each electric motor **114** can be equipped with a VFD, and an A/C console, that controls the speed of the motor **114**, and hence the speed of the pumps **110**.

In addition to the above, the embodiment of FIG. **2** can include a skid (not shown) for supporting some or all of the above-described equipment. For example, the skid can support the electric motors **114** and the pumps **110**. In addition, the skid can support the VFD. Structurally, the skid can be constructed of heavy-duty longitudinal beams and cross-members made of an appropriate material, such as, for example, steel. The skid can further include heavy-duty lifting lugs, or eyes, that can optionally be of sufficient strength to allow the skid to be lifted at a single lift point.

The pumps **110** are fluidly connected to a wellhead **116** via a missile **118**. As shown, the pump trailers **112** can be positioned near enough to the missile **118** to connect fracturing fluid lines **120** between the pumps **110** and the missile **118**. The missile **118** is then connected to the wellhead **116** and configured to deliver fracturing fluid provided by the pumps **110** to the wellhead **116**.

Still referring to FIG. **2**, this embodiment also includes a plurality of turbine generators **122** that are connected to, and provide power to, the electric motors **114** on the pump trailers **112**. To accomplish this, the turbine generators **122** can be connected to the electric motors **114** by power lines (not shown). The turbine generators **122** can be connected to the electric motors **114** via power distribution panels (not shown). In certain embodiments, the turbine generators **122** can be powered by natural gas, similar to the electric generators **22** discussed above in reference to the embodiment of FIG. **1**. Also included are control units **144** for the turbine generators **122**.

The embodiment of FIG. **2** can include other equipment similar to that discussed above. For example, FIG. **2** shows sand transporting vehicles **126**, acid transporting vehicles **128**, other chemical transporting vehicles **130**, hydration units **132**, blenders **134**, water tanks **136**, conveyor belts **138**, and pump control and data monitoring equipment **140** mounted on a control vehicle **142**. The function and specifications of each of these is similar to corresponding elements shown in FIG. **1**.

Use of pumps **10**, **110** powered by electric motors **14**, **114** and natural gas powered electric generators **22** (or turbine generators **122**) to pump fracturing fluid into a well is advantageous over known systems for many different reasons. For example, the equipment (e.g. pumps, electric motors, and generators) is lighter than the diesel pumps commonly used in the industry. The lighter weight of the equipment allows loading of the equipment directly onto a truck body. In fact, where the equipment is attached to a skid, as described above, the skid itself can be lifted on the truck body, along with all the equipment attached to the skid, in one simple action. Alternatively, and as shown in FIG. **2**, trailers **112** can be used to transport the pumps **110** and electric motors **114**, with two or more pumps **110** carried on a single trailer **112**. Thus, the same number of pumps **110** can be transported on fewer trailers **112**. Known diesel pumps, in contrast, cannot be transported directly on a truck body or two on a trailer, but must be transported individually on trailers because of the great weight of the pumps.

The ability to transfer the equipment of the present technology directly on a truck body or two to a trailer increases efficiency and lowers cost. In addition, by eliminating or reducing the number of trailers to carry the equipment, the equipment can be delivered to sites having a restricted amount of space, and can be carried to and away from worksites with less damage to the surrounding environment. Another reason that the electric pump system of the present technology is advantageous is that it runs on natural gas. Thus, the fuel is lower cost, the components of the system require less maintenance, and emissions are lower, so that potentially negative impacts on the environment are reduced.

In practice, a hydraulic fracturing operation can be carried out according to the following process. First, the water, sand, and other components are blended to form a fracturing fluid, which is pumped down the well by the electric-powered pumps. Typically, the well is designed so that the fracturing fluid can exit the wellbore at a desired location and pass into the surrounding formation. For example, in some embodiments the wellbore can have perforations that allow the fluid to pass from the wellbore into the formation. In other embodiments, the wellbore can include an openable sleeve, or the well can be open hole. The fracturing fluid can be pumped into the wellbore at a high enough pressure that the fracturing fluid cracks the formation, and enters into the cracks. Once inside the cracks, the sand, or other proppants in the mixture, wedges in the cracks, and holds the cracks open.

Using the pump control and data monitoring equipment **40**, the operator can monitor, gauge, and manipulate parameters of the operation, such as pressures, and volumes of fluids and proppants entering and exiting the well. For example, the operator can increase or decrease the ratio of sand to water as the fracturing process progresses and circumstances change.

This process of injecting fracturing fluid into the wellbore can be carried out continuously, or repeated multiple times in stages, until the fracturing of the formation is optimized. Optionally, the wellbore can be temporarily plugged between each stage to maintain pressure, and increase fracturing in the formation. Generally, the proppant is inserted into the cracks formed in the formation by the fracturing, and left in place in the formation to prop open the cracks and allow oil or gas to flow into the wellbore.

While the technology has been shown or described in only some of its forms, it should be apparent to those skilled in the art that it is not so limited, but is susceptible to various changes without departing from the scope of the technology. Furthermore, it is to be understood that the above disclosed embodiments are merely illustrative of the principles and applications of the present technology. Accordingly, numerous modifications can be made to the illustrative embodiments and other arrangements can be devised without departing from the spirit and scope of the present technology as defined by the appended claims.

What is claimed is:

1. A system for hydraulically fracturing an underground formation in an oil or gas well to extract oil or gas from the formation, the oil or gas well having a wellbore that permits passage of fluid from the wellbore into the formation, the system comprising:

a trailer for attachment to a truck;

two or more pumps attached to the trailer and fluidly connected to the well, the pumps configured to pump fluid into the wellbore;

one or more electric motors attached to the pumps to drive the pumps, the electric motors attached to the trailer; and

a variable frequency drive connected to the electric motor to control the speed of the motor, wherein the variable frequency drive performs electric motor diagnostics to prevent damage to the one or more electric motors.

2. The system of claim **1**, further comprising:

a skid to which at least one of the pumps and the one or more electric motors are attached.

3. The system of claim **1**, further comprising:

a natural gas powered generator for connection to the electric motor that provides electric power to the electric motor.

4. A method of hydraulically fracturing an underground formation in an oil or gas well to extract oil or gas from the formation, the oil or gas well having a wellbore that permits passage of fluid from the wellbore into the formation, the method comprising:

pumping fluid into the wellbore using hydraulic fracturing pumps;

powering the hydraulic fracturing pumps using an electric motor; and

controlling the speed of the motor using a variable frequency drive, wherein the variable frequency drive performs electric motor diagnostics to prevent damage to the electric motor.

5. The method of claim **4**, further comprising:

powering the electric motor using a generator.

6. The method of claim **5**, further comprising:

powering the generator using natural gas.

7. A system for hydraulically fracturing an underground formation in an oil or gas well to extract oil or gas from the formation, the oil or gas well having a wellbore that permits passage of fluid from the wellbore into the formation, the system comprising:

a pump fluidly connected to the well; and

an electric motor to power the pump;

the pump configured to pump fluid into the wellbore; and

a variable frequency drive connected to the electric motor to control the speed of the motor and having one or more power semiconductor heat sinks having thermal sensors monitored by a microprocessor to prevent damage caused by excessive heat.

8. The system of claim **7**, wherein the electric pump is mounted on a vehicle, and can be ported from one well to another.

9. The system of claim **7**, further comprising:

a generator electrically connected to the electric motor to provide electric power to the motor.

10. The system of claim **9**, wherein the generator is fueled by natural gas.

11. The system of claim **9**, wherein the generator is a turbine generator.

12. The system of claim **9**, wherein the pump, electric motor, and generator are mounted on a vehicle, and can be ported from one well to another.

13. The system of claim **12**, wherein the vehicle is a truck having at least five axles.

14. The system of claim **7**, wherein the pump is a triplex or a quinteplex pump rated at about 2250 hydraulic horsepower or more.

15. The system of claim **7**, wherein the electric motor has a maximum continuous power output of about 1750 brake horsepower or more.

16. The system of claim **7**, wherein the electric motor has a maximum continuous torque of about 8750 lb-ft or more.

* * * * *