Attorney Docket No. ALPH.P035 Patent

Transmittal of Documents

Certification Under 37 C.F.R. §1.8(a)

Transmitted via **June 13, 2008**
Date of Transmission

USPTO EFS

I hereby certify that this document, and any other accompanying documents referred to herein are being transmitted to the United States Patent Office via EFS in accordance with 37 C.F.R. §1.6(a)(4) on the date indicated above.

Jerry Donnard
(Print Name of Person Transmitting Documents)

(Signature of Person Transmitting Documents)

Application Data Sheet;
Nonprovisional Patent Application;
Drawings; and
Electronic payment of filing fee.

Amazon v. Jawbone
U.S. Patent 8,503,691
Amazon Ex. 1002

DUAL OMNIDIRECTIONAL MICROPHONE ARRAY (DOMA)

Inventor:
Gregory C. Burnett

RELATED APPLICATIONS

This application claims the benefit of United States (US) Patent Application Numbers 60/934,551, filed June 13, 2007, 60/953,444, filed August 1, 2007, 60/954,712, filed August 8, 2007, and 61/045,377, filed April 16, 2008.

TECHNICAL FIELD

The disclosure herein relates generally to noise suppression. In particular, this disclosure relates to noise suppression systems, devices, and methods for use in acoustic applications.

BACKGROUND

Conventional adaptive noise suppression algorithms have been around for some time. These conventional algorithms have used two or more microphones to sample both an (unwanted) acoustic noise field and the (desired) speech of a user. The noise relationship between the microphones is then determined using an adaptive filter (such as Least-Mean-Squares as described in Haykin & Widrow, ISBN# 0471215708, Wiley, 2002, but any adaptive or stationary system identification algorithm may be used) and that relationship used to filter the noise from the desired signal.

Most conventional noise suppression systems currently in use for speech communication systems are based on a single-microphone spectral subtraction technique first develop in the 1970's and described, for example, by S. F. Boll in "Suppression of Acoustic Noise in Speech using Spectral Subtraction," IEEE Trans. on ASSP, pp. 113-120, 1979. These techniques have been refined over the years, but the basic principles of operation have remained the same. See, for example, US Patent Number 5,687,243 of McLaughlin, et al., and US Patent Number 4,811,404 of Vilmur, et al. There have also been several attempts at multi-microphone noise suppression systems, such as those outlined in US Patent

Number 5,406,622 of Silverberg et al. and US Patent Number 5,463,694 of Bradley et al. Multi-microphone systems have not been very successful for a variety of reasons, the most compelling being poor noise cancellation performance and/or significant speech distortion. Primarily, conventional multi-microphone systems attempt to increase the SNR of the user's speech by "steering" the nulls of the system to the strongest noise sources. This approach is limited in the number of noise sources removed by the number of available nulls.

The Jawbone earpiece (referred to as the "Jawbone), introduced in December 2006 by AliphCom of San Francisco, California, was the first known commercial product to use a pair of physical directional microphones (instead of omnidirectional microphones) to reduce environmental acoustic noise. The technology supporting the Jawbone is currently described under one or more of US Patent Number 7,246,058 by Burnett and/or US Patent Application Numbers 10/400,282, 10/667,207, and/or 10/769,302. Generally, multi-microphone techniques make use of an acoustic-based Voice Activity Detector (VAD) to determine the background noise characteristics, where "voice" is generally understood to include human voiced speech, unvoiced speech, or a combination of voiced and unvoiced speech. The Jawbone improved on this by using a microphone-based sensor to construct a VAD signal using directly detected speech vibrations in the user's cheek. This allowed the Jawbone to aggressively remove noise when the user was not producing speech. However, the Jawbone uses a directional microphone array.

INCORPORATION BY REFERENCE

Each patent, patent application, and/or publication mentioned in this specification is herein incorporated by reference in its entirety to the same extent as if each individual patent, patent application, and/or publication was specifically and individually indicated to be incorporated by reference.

BRIEF DESCRIPTION OF THE DRAWINGS

Figure 1 is a two-microphone adaptive noise suppression system, under an embodiment.

Figure 2 is an array and speech source (S) configuration, under an embodiment. The microphones are separated by a distance approximately equal to $2d_0$, and the speech source is located a distance d_s away from the midpoint of the array at an angle θ. The system is axially symmetric so only d_s and θ need be specified.

Figure 3 is a block diagram for a first order gradient microphone using two omnidirectional elements O_1 and O_2, under an embodiment.

Figure 4 is a block diagram for a DOMA including two physical microphones configured to form two virtual microphones V_1 and V_2, under an embodiment.

Figure 5 is a block diagram for a DOMA including two physical microphones configured to form N virtual microphones V_1 through V_N, where N is any number greater than one, under an embodiment.

Figure 6 is an example of a headset or head-worn device that includes the DOMA, as described herein, under an embodiment.

Figure 7 is a flow diagram for denoising acoustic signals using the DOMA, under an embodiment.

Figure 8 is a flow diagram for forming the DOMA, under an embodiment.

Figure 9 is a plot of linear response of virtual microphone V_2 to a 1 kHz speech source at a distance of 0.1 m, under an embodiment. The null is at 0 degrees, where the speech is normally located.

Figure 10 is a plot of linear response of virtual microphone V_2 to a 1 kHz noise source at a distance of 1.0 m, under an embodiment. There is no null and all noise sources are detected.

Figure 11 is a plot of linear response of virtual microphone V_1 to a 1 kHz speech source at a distance of 0.1 m, under an embodiment. There is no null and the response for speech is greater than that shown in Figure 9.

Figure 12 is a plot of linear response of virtual microphone V_1 to a 1 kHz noise source at a distance of 1.0 m, under an embodiment. There is no null and the response is very similar to V_2 shown in Figure 10.

Figure 13 is a plot of linear response of virtual microphone V_1 to a speech source at a distance of 0.1 m for frequencies of 100, 500, 1000, 2000, 3000, and 4000 Hz, under an embodiment.

Figure 14 is a plot showing comparison of frequency responses for speech for the array of an embodiment and for a conventional cardioid microphone.

Figure 15 is a plot showing speech response for V_1 (top, dashed) and V_2 (bottom, solid) versus B with d_s assumed to be 0.1 m, under an embodiment. The spatial null in V_2 is relatively broad.

Figure 16 is a plot showing a ratio of V_1/V_2 speech responses shown in Figure 10 versus B, under an embodiment. The ratio is above 10 dB for all $0.8 < B < 1.1$. This means that the physical β of the system need not be exactly modeled for good performance.

Figure 17 is a plot of B versus actual d_s assuming that d_s = 10 cm and theta = 0, under an embodiment.

Figure 18 is a plot of B versus theta with d_s = 10 cm and assuming d_s = 10 cm, under an embodiment.

Figure 19 is a plot of amplitude (top) and phase (bottom) response of N(s) with B = 1 and D = -7.2 μsec, under an embodiment. The resulting phase difference clearly affects high frequencies more than low.

Figure 20 is a plot of amplitude (top) and phase (bottom) response of N(s) with B = 1.2 and D = -7.2 μsec, under an embodiment. Non-unity B affects the entire frequency range.

Figure 21 is a plot of amplitude (top) and phase (bottom) response of the effect on the speech cancellation in V_2 due to a mistake in the location of the speech source with q1 = 0 degrees and q2 = 30 degrees, under an embodiment. The cancellation remains below -10 dB for frequencies below 6 kHz.

Figure 22 is a plot of amplitude (top) and phase (bottom) response of the effect on the speech cancellation in V_2 due to a mistake in the location of the speech source with q1 = 0 degrees and q2 = 45 degrees, under an embodiment. The cancellation is below -10 dB only for frequencies below about 2.8 kHz and a reduction in performance is expected.

Figure 23 shows experimental results for a $2d_0$ = 19 mm array using a linear β of 0.83 on a Bruel and Kjaer Head and Torso Simulator (HATS) in very loud (~85 dBA) music/speech noise environment, under an embodiment. The noise has

been reduced by about 25 dB and the speech hardly affected, with no noticeable distortion.

DETAILED DESCRIPTION

A dual omnidirectional microphone array (DOMA) that provides improved noise suppression is described herein. Compared to conventional arrays and algorithms, which seek to reduce noise by nulling out noise sources, the array of an embodiment is used to form two distinct virtual directional microphones which are configured to have very similar noise responses and very dissimilar speech responses. The only null formed by the DOMA is one used to remove the speech of the user from V_2. The two virtual microphones of an embodiment can be paired with an adaptive filter algorithm and/or VAD algorithm to significantly reduce the noise without distorting the speech, significantly improving the SNR of the desired speech over conventional noise suppression systems. The embodiments described herein are stable in operation, flexible with respect to virtual microphone pattern choice, and have proven to be robust with respect to speech source-to-array distance and orientation as well as temperature and calibration techniques.

In the following description, numerous specific details are introduced to provide a thorough understanding of, and enabling description for, embodiments of the DOMA. One skilled in the relevant art, however, will recognize that these embodiments can be practiced without one or more of the specific details, or with other components, systems, etc. In other instances, well-known structures or operations are not shown, or are not described in detail, to avoid obscuring aspects of the disclosed embodiments.

Unless otherwise specified, the following terms have the corresponding meanings in addition to any meaning or understanding they may convey to one skilled in the art.

The term "bleedthrough" means the undesired presence of noise during speech.

The term "denoising" means removing unwanted noise from Mic1, and also refers to the amount of reduction of noise energy in a signal in decibels (dB).

The term "devoicing" means removing/distorting the desired speech from Mic1.

The term "directional microphone (DM)" means a physical directional microphone that is vented on both sides of the sensing diaphragm.

The term "Mic1 (M1)" means a general designation for an adaptive noise suppression system microphone that usually contains more speech than noise.

The term "Mic2 (M2)" means a general designation for an adaptive noise suppression system microphone that usually contains more noise than speech.

The term "noise" means unwanted environmental acoustic noise.

The term "null" means a zero or minima in the spatial response of a physical or virtual directional microphone.

The term "O_1" means a first physical omnidirectional microphone used to form a microphone array.

The term "O_2" means a second physical omnidirectional microphone used to form a microphone array.

The term "speech" means desired speech of the user.

The term "Skin Surface Microphone (SSM)" is a microphone used in an earpiece (e.g., the Jawbone earpiece available from Aliph of San Francisco, California) to detect speech vibrations on the user's skin.

The term "V_1" means the virtual directional "speech" microphone, which has no nulls.

The term "V_2" means the virtual directional "noise" microphone, which has a null for the user's speech.

The term "Voice Activity Detection (VAD) signal" means a signal indicating when user speech is detected.

The term "virtual microphones (VM)" or "virtual directional microphones" means a microphone constructed using two or more omnidirectional microphones and associated signal processing.

Figure 1 is a two-microphone adaptive noise suppression system 100, under an embodiment. The two-microphone system 100 including the combination of physical microphones MIC 1 and MIC 2 along with the processing or circuitry components to which the microphones couple (described in detail below, but not

shown in this figure) is referred to herein as the dual omnidirectional microphone array (DOMA) 110, but the embodiment is not so limited. Referring to Figure 1, in analyzing the single noise source 101 and the direct path to the microphones, the total acoustic information coming into MIC 1 (102, which can be an physical or virtual microphone) is denoted by $m_1(n)$. The total acoustic information coming into MIC 2 (103, which can also be an physical or virtual microphone) is similarly labeled $m_2(n)$. In the z (digital frequency) domain, these are represented as $M_1(z)$ and $M_2(z)$. Then,

$$\begin{aligned} M_1(z) &= S(z) + N_2(z) \\ M_2(z) &= N(z) + S_2(z) \end{aligned}$$

with

$$\begin{aligned} N_2(z) &= N(z)H_1(z) \\ S_2(z) &= S(z)H_2(z), \end{aligned}$$

so that

$$\begin{aligned} M_1(z) &= S(z) + N(z)H_1(z) \\ M_2(z) &= N(z) + S(z)H_2(z). \end{aligned} \qquad \text{Eq. 1}$$

This is the general case for all two microphone systems. Equation 1 has four unknowns and only two known relationships and therefore cannot be solved explicitly.

However, there is another way to solve for some of the unknowns in Equation 1. The analysis starts with an examination of the case where the speech is not being generated, that is, where a signal from the VAD subsystem 104 (optional) equals zero. In this case, s(n) = S(z) = 0, and Equation 1 reduces to

$$\begin{aligned} M_{1N}(z) &= N(z)H_1(z) \\ M_{2N}(z) &= N(z), \end{aligned}$$

where the N subscript on the M variables indicate that only noise is being received. This leads to

$$M_{1N}(z) = M_{2N}(z)H_1(z)$$

$$H_1(z) = \frac{M_{1N}(z)}{M_{2N}(z)}. \qquad \text{Eq. 2}$$

The function $H_1(z)$ can be calculated using any of the available system identification algorithms and the microphone outputs when the system is certain that only noise is being received. The calculation can be done adaptively, so that the system can react to changes in the noise.

A solution is now available for $H_1(z)$, one of the unknowns in Equation 1. The final unknown, $H_2(z)$, can be determined by using the instances where speech is being produced and the VAD equals one. When this is occurring, but the recent (perhaps less than 1 second) history of the microphones indicate low levels of noise, it can be assumed that n(s) = N(z) ~ 0. Then Equation 1 reduces to

$$M_{1S}(z)=S(z)$$
$$M_{2S}(z)=S(z)H_2(z),$$

which in turn leads to

$$M_{2S}(z)=M_{1S}(z)H_2(z)$$
$$H_2(z)=\frac{M_{2S}(z)}{M_{1S}(z)},$$

which is the inverse of the $H_1(z)$ calculation. However, it is noted that different inputs are being used (now only the speech is occurring whereas before only the noise was occurring). While calculating $H_2(z)$, the values calculated for $H_1(z)$ are held constant (and vice versa) and it is assumed that the noise level is not high enough to cause errors in the $H_2(z)$ calculation.

After calculating $H_1(z)$ and $H_2(z)$, they are used to remove the noise from the signal. If Equation 1 is rewritten as

$$S(z)=M_1(z)-N(z)H_1(z)$$
$$N(z)=M_2(z)-S(z)H_2(z)$$
$$S(z)=M_1(z)-[M_2(z)-S(z)H_2(z)]H_1(z)$$
$$S(z)[1-H_2(z)H_1(z)]=M_1(z)-M_2(z)H_1(z),$$

then N(z) may be substituted as shown to solve for S(z) as

$$S(z)=\frac{M_1(z)-M_2(z)H_1(z)}{1-H_1(z)H_2(z)}. \qquad \text{Eq. 3}$$

If the transfer functions $H_1(z)$ and $H_2(z)$ can be described with sufficient accuracy, then the noise can be completely removed and the original signal recovered. This remains true without respect to the amplitude or spectral characteristics of the noise. If there is very little or no leakage from the speech source into M_2, then $H_2(z)\approx 0$ and Equation 3 reduces to

$$S(z)\approx M_1(z)-M_2(z)H_1(z). \qquad \text{Eq. 4}$$

Equation 4 is much simpler to implement and is very stable, assuming $H_1(z)$ is stable. However, if significant speech energy is in $M_2(z)$, devoicing can occur. In order to construct a well-performing system and use Equation 4, consideration is given to the following conditions:

R1. Availability of a perfect (or at least very good) VAD in noisy conditions
R2. Sufficiently accurate $H_1(z)$
R3. Very small (ideally zero) $H_2(z)$.
R4. During speech production, $H_1(z)$ cannot change substantially.
R5. During noise, $H_2(z)$ cannot change substantially.

Condition R1 is easy to satisfy if the SNR of the desired speech to the unwanted noise is high enough. "Enough" means different things depending on the method of VAD generation. If a VAD vibration sensor is used, as in Burnett 7,256,048, accurate VAD in very low SNRs (-10 dB or less) is possible. Acoustic-only methods using information from O_1 and O_2 can also return accurate VADs, but are limited to SNRs of ~3 dB or greater for adequate performance.

Condition R5 is normally simple to satisfy because for most applications the microphones will not change position with respect to the user's mouth very often or rapidly. In those applications where it may happen (such as hands-free conferencing systems) it can be satisfied by configuring Mic2 so that $H_2(z)\approx 0$.

Satisfying conditions R2, R3, and R4 are more difficult but are possible given the right combination of V_1 and V_2. Methods are examined below that have proven to be effective in satisfying the above, resulting in excellent noise suppression performance and minimal speech removal and distortion in an embodiment.

The DOMA, in various embodiments, can be used with the Pathfinder system as the adaptive filter system or noise removal. The Pathfinder system, available from AliphCom, San Francisco, CA, is described in detail in other patents and patent applications referenced herein. Alternatively, any adaptive filter or noise removal algorithm can be used with the DOMA in one or more various alternative embodiments or configurations.

When the DOMA is used with the Pathfinder system, the Pathfinder system generally provides adaptive noise cancellation by combining the two microphone signals (e.g., Mic1, Mic2) by filtering and summing in the time domain. The adaptive filter generally uses the signal received from a first microphone of the DOMA to remove noise from the speech received from at least one other microphone of the DOMA, which relies on a slowly varying linear transfer function between the two microphones for sources of noise. Following processing of the two channels of the DOMA, an output signal is generated in which the noise content is attenuated with respect to the speech content, as described in detail below.

Figure 2 is a generalized two-microphone array (DOMA) including an array 201/202 and speech source S configuration, under an embodiment. **Figure 3** is a system 300 for generating or producing a first order gradient microphone V using two omnidirectional elements O_1 and O_2, under an embodiment. The array of an embodiment includes two physical microphones 201 and 202 (e.g., omnidirectional microphones) placed a distance $2d_0$ apart and a speech source 200 is located a distance d_s away at an angle of θ. This array is axially symmetric (at least in free space), so no other angle is needed. The output from each microphone 201 and 202 can be delayed (z_1 and z_2), multiplied by a gain (A_1 and A_2), and then summed with the other as demonstrated in **Figure 3**. The output of the array is or forms at least one virtual microphone, as described in detail below. This operation can be over any frequency range desired. By varying the magnitude and sign of the delays and gains, a wide variety of virtual microphones (VMs), also referred to herein as

virtual directional microphones, can be realized. There are other methods known to those skilled in the art for constructing VMs but this is a common one and will be used in the enablement below.

As an example, **Figure 4** is a block diagram for a DOMA 400 including two physical microphones configured to form two virtual microphones V_1 and V_2, under an embodiment. The DOMA includes two first order gradient microphones V_1 and V_2 formed using the outputs of two microphones or elements O_1 and O_2 (201 and 202), under an embodiment. The DOMA of an embodiment includes two physical microphones 201 and 202 that are omnidirectional microphones, as described above with reference to Figures 2 and 3. The output from each microphone is coupled to a processing component 402, or circuitry, and the processing component outputs signals representing or corresponding to the virtual microphones V_1 and V_2.

In this example system 400, the output of physical microphone 201 is coupled to processing component 402 that includes a first processing path that includes application of a first delay z_{11} and a first gain A_{11} and a second processing path that includes application of a second delay z_{12} and a second gain A_{12}. The output of physical microphone 202 is coupled to a third processing path of the processing component 402 that includes application of a third delay z_{21} and a third gain A_{21} and a fourth processing path that includes application of a fourth delay z_{22} and a fourth gain A_{22}. The output of the first and third processing paths is summed to form virtual microphone V_1, and the output of the second and fourth processing paths is summed to form virtual microphone V_2.

As described in detail below, varying the magnitude and sign of the delays and gains of the processing paths leads to a wide variety of virtual microphones (VMs), also referred to herein as virtual directional microphones, can be realized. While the processing component 402 described in this example includes four processing paths generating two virtual microphones or microphone signals, the embodiment is not so limited. For example, **Figure 5** is a block diagram for a DOMA 500 including two physical microphones configured to form N virtual microphones V_1 through V_N, where N is any number greater than one, under an embodiment. Thus, the DOMA can include a processing component 502 having any

number of processing paths as appropriate to form a number N of virtual microphones.

The DOMA of an embodiment can be coupled or connected to one or more remote devices. In a system configuration, the DOMA outputs signals to the remote devices. The remote devices include, but are not limited to, at least one of cellular telephones, satellite telephones, portable telephones, wireline telephones, Internet telephones, wireless transceivers, wireless communication radios, personal digital assistants (PDAs), personal computers (PCs), headset devices, head-worn devices, and earpieces.

Furthermore, the DOMA of an embodiment can be a component or subsystem integrated with a host device. In this system configuration, the DOMA outputs signals to components or subsystems of the host device. The host device includes, but is not limited to, at least one of cellular telephones, satellite telephones, portable telephones, wireline telephones, Internet telephones, wireless transceivers, wireless communication radios, personal digital assistants (PDAs), personal computers (PCs), headset devices, head-worn devices, and earpieces.

As an example, **Figure 6** is an example of a headset or head-worn device 600 that includes the DOMA, as described herein, under an embodiment. The headset 600 of an embodiment includes a housing having two areas or receptacles (not shown) that receive and hold two microphones (e.g., O_1 and O_2). The headset 600 is generally a device that can be worn by a speaker 602, for example, a headset or earpiece that positions or holds the microphones in the vicinity of the speaker's mouth. The headset 600 of an embodiment places a first physical microphone (e.g., physical microphone O_1) in a vicinity of a speaker's lips. A second physical microphone (e.g., physical microphone O_2) is placed a distance behind the first physical microphone. The distance of an embodiment is in a range of a few centimeters behind the first physical microphone or as described herein (e.g., described with reference to Figures 1-5). The DOMA is symmetric and is used in the same configuration or manner as a single close-talk microphone, but is not so limited.

Figure 7 is a flow diagram for denoising 700 acoustic signals using the DOMA, under an embodiment. The denoising 700 begins by receiving 702 acoustic

signals at a first physical microphone and a second physical microphone. In response to the acoustic signals, a first microphone signal is output from the first physical microphone and a second microphone signal is output from the second physical microphone 704. A first virtual microphone is formed 706 by generating a first combination of the first microphone signal and the second microphone signal. A second virtual microphone is formed 708 by generating a second combination of the first microphone signal and the second microphone signal, and the second combination is different from the first combination. The first virtual microphone and the second virtual microphone are distinct virtual directional microphones with substantially similar responses to noise and substantially dissimilar responses to speech. The denoising 700 generates 710 output signals by combining signals from the first virtual microphone and the second virtual microphone, and the output signals include less acoustic noise than the acoustic signals.

Figure 8 is a flow diagram for forming 800 the DOMA, under an embodiment. Formation 800 of the DOMA includes forming 802 a physical microphone array including a first physical microphone and a second physical microphone. The first physical microphone outputs a first microphone signal and the second physical microphone outputs a second microphone signal. A virtual microphone array is formed 804 comprising a first virtual microphone and a second virtual microphone. The first virtual microphone comprises a first combination of the first microphone signal and the second microphone signal. The second virtual microphone comprises a second combination of the first microphone signal and the second microphone signal, and the second combination is different from the first combination. The virtual microphone array including a single null oriented in a direction toward a source of speech of a human speaker.

The construction of VMs for the adaptive noise suppression system of an embodiment includes substantially similar noise response in V_1 and V_2. Substantially similar noise response as used herein means that $H_1(z)$ is simple to model and will not change much during speech, satisfying conditions R2 and R4 described above and allowing strong denoising and minimized bleedthrough.

The construction of VMs for the adaptive noise suppression system of an embodiment includes relatively small speech response for V_2. The relatively small

speech response for V_2 means that $H_2(z) \approx 0$, which will satisfy conditions R3 and R5 described above.

The construction of VMs for the adaptive noise suppression system of an embodiment further includes sufficient speech response for V_1 so that the cleaned speech will have significantly higher SNR than the original speech captured by O_1.

The description that follows assumes that the responses of the omnidirectional microphones O_1 and O_2 to an identical acoustic source have been normalized so that they have exactly the same response (amplitude and phase) to that source. This can be accomplished using standard microphone array methods (such as frequency-based calibration) well known to those versed in the art.

Referring to the condition that construction of VMs for the adaptive noise suppression system of an embodiment includes relatively small speech response for V_2, it is seen that for discrete systems $V_2(z)$ can be represented as:

$$V_2(z) = O_2(z) - z^{-\gamma}\beta O_1(z)$$

where

$$\beta = \frac{d_1}{d_2}$$

$$\gamma = \frac{d_2 - d_1}{c} \cdot f_s \quad \text{(samples)}$$

$$d_1 = \sqrt{d_s^2 - 2d_s d_0 \cos(\theta) + d_0^2}$$
$$d_2 = \sqrt{d_s^2 + 2d_s d_0 \cos(\theta) + d_0^2}$$

The distances d_1 and d_2 are the distance from O_1 and O_2 to the speech source (see **Figure 2**), respectively, and γ is their difference divided by *c*, the speed of sound, and multiplied by the sampling frequency f_s. Thus γ is in samples, but need not be an integer. For non-integer γ, fractional-delay filters (well known to those versed in the art) may be used.

It is important to note that the β above is not the conventional β used to denote the mixing of VMs in adaptive beamforming; it is a physical variable of the system that depends on the intra-microphone distance d_0 (which is fixed) and the

distance d_s and angle θ, which can vary. As shown below, for properly calibrated microphones, it is not necessary for the system to be programmed with the exact β of the array. Errors of approximately 10-15% in the actual β (i.e. the β used by the algorithm is not the β of the physical array) have been used with very little degradation in quality. The algorithmic value of β may be calculated and set for a particular user or may be calculated adaptively during speech production when little or no noise is present. However, adaptation during use is not required for nominal performance.

Figure 9 is a plot of linear response of virtual microphone V_2 with $\beta = 0.8$ to a 1 kHz speech source at a distance of 0.1 m, under an embodiment. The null in the linear response of virtual microphone V_2 to speech is located at 0 degrees, where the speech is typically expected to be located. **Figure 10** is a plot of linear response of virtual microphone V_2 with $\beta = 0.8$ to a 1 kHz noise source at a distance of 1.0 m, under an embodiment. The linear response of V_2 to noise is devoid of or includes no null, meaning all noise sources are detected.

The above formulation for $V_2(z)$ has a null at the speech location and will therefore exhibit minimal response to the speech. This is shown in **Figure 9** for an array with $d_0 = 10.7$ mm and a speech source on the axis of the array ($\theta = 0$) at 10 cm ($\beta = 0.8$). Note that the speech null at zero degrees is not present for noise in the far field for the same microphone, as shown in **Figure 10** with a noise source distance of approximately 1 meter. This insures that noise in front of the user will be detected so that it can be removed. This differs from conventional systems that can have difficulty removing noise in the direction of the mouth of the user.

The $V_1(z)$ can be formulated using the general form for $V_1(z)$:

$$V_1(z) = \alpha_A O_1(z) \cdot z^{-d_A} - \alpha_B O_2(z) \cdot z^{-d_B}$$

Since

$$V_2(z) = O_2(z) - z^{-\gamma} \beta O_1(z)$$

and, since for noise in the forward direction

$$O_{2N}(z) = O_{1N}(z) \cdot z^{-\gamma},$$

then

$$V_{2N}(z) = O_{1N}(z) \cdot z^{-\gamma} - z^{-\gamma}\beta O_{1N}(z)$$
$$V_{2N}(z) = (1-\beta)\left(O_{1N}(z) \cdot z^{-\gamma}\right)$$

If this is then set equal to $V_1(z)$ above, the result is

$$V_{1N}(z) = \alpha_A O_{1N}(z) \cdot z^{-d_A} - \alpha_B O_{1N}(z) \cdot z^{-\gamma} \cdot z^{-d_B} = (1-\beta)\left(O_{1N}(z) \cdot z^{-\gamma}\right)$$

thus we may set

$$d_A = \gamma$$
$$d_B = 0$$
$$\alpha_A = 1$$
$$\alpha_B = \beta$$

to get

$$V_1(z) = O_1(z) \cdot z^{-\gamma} - \beta O_2(z)$$

The definitions for V_1 and V_2 above mean that for noise $H_1(z)$ is:

$$H_1(z) = \frac{V_1(z)}{V_2(z)} = \frac{-\beta O_2(z) + O_1(z) \cdot z^{-\gamma}}{O_2(z) - z^{-\gamma}\beta O_1(z)}$$

which, if the amplitude noise responses are about the same, has the form of an allpass filter. This has the advantage of being easily and accurately modeled, especially in magnitude response, satisfying R2.

This formulation assures that the noise response will be as similar as possible and that the speech response will be proportional to $(1-\beta^2)$. Since β is the ratio of the distances from O_1 and O_2 to the speech source, it is affected by the size of the array and the distance from the array to the speech source.

Figure 11 is a plot of linear response of virtual microphone V_1 with $\beta = 0.8$ to a 1 kHz speech source at a distance of 0.1 m, under an embodiment. The linear response of virtual microphone V_1 to speech is devoid of or includes no null and the response for speech is greater than that shown in Figure 4.

Figure 12 is a plot of linear response of virtual microphone V_1 with $\beta = 0.8$ to a 1 kHz noise source at a distance of 1.0 m, under an embodiment. The linear response of virtual microphone V_1 to noise is devoid of or includes no null and the response is very similar to V_2 shown in Figure 5.

Figure 13 is a plot of linear response of virtual microphone V_1 with $\beta = 0.8$ to a speech source at a distance of 0.1 m for frequencies of 100, 500, 1000, 2000, 3000, and 4000 Hz, under an embodiment. **Figure 14** is a plot showing comparison of frequency responses for speech for the array of an embodiment and for a conventional cardioid microphone.

The response of V_1 to speech is shown in **Figure 11**, and the response to noise in **Figure 12**. Note the difference in speech response compared to V_2 shown in **Figure 9** and the similarity of noise response shown in **Figure 10**. Also note that the orientation of the speech response for V_1 shown in **Figure 11** is completely opposite the orientation of conventional systems, where the main lobe of response is normally oriented toward the speech source. The orientation of an embodiment, in which the main lobe of the speech response of V_1 is oriented away from the speech source, means that the speech sensitivity of V_1 is lower than a normal directional microphone but is flat for all frequencies within approximately +-30 degrees of the axis of the array, as shown in **Figure 13**. This flatness of response for speech means that no shaping postfilter is needed to restore omnidirectional frequency response. This does come at a price - as shown in **Figure 14**, which shows the speech response of V_1 with $\beta = 0.8$ and the speech response of a cardioid microphone. The speech response of V_1 is approximately 0 to ~13 dB less than a normal directional microphone between approximately 500 and 7500 Hz and approximately 0 to 10+ dB greater than a directional microphone below approximately 500 Hz and above 7500 Hz for a sampling frequency of approximately 16000 Hz. However, the superior noise suppression made possible using this system more than compensates for the initially poorer SNR.

It should be noted that **Figures 9-12** assume the speech is located at approximately 0 degrees and approximately 10 cm, $\beta = 0.8$, and the noise at all angles is located approximately 1.0 meter away from the midpoint of the array. Generally, the noise distance is not required to be 1 m or more, but the denoising is the best for those distances. For distances less than approximately 1 m, denoising will not be as effective due to the greater dissimilarity in the noise responses of V_1 and V_2. This has not proven to be an impediment in practical use – in fact, it can be seen as a feature. Any "noise" source that is ~10 cm away from the earpiece is likely to be desired to be captured and transmitted.

The speech null of V_2 means that the VAD signal is no longer a critical component. The VAD's purpose was to ensure that the system would not train on speech and then subsequently remove it, resulting in speech distortion. If, however, V_2 contains no speech, the adaptive system cannot train on the speech and cannot remove it. As a result, the system can denoise all the time without fear of devoicing, and the resulting clean audio can then be used to generate a VAD signal for use in subsequent single-channel noise suppression algorithms such as spectral subtraction. In addition, constraints on the absolute value of $H_1(z)$ (i.e. restricting it to absolute values less than two) can keep the system from fully training on speech even if it is detected. In reality, though, speech can be present due to a mis-located V_2 null and/or echoes or other phenomena, and a VAD sensor or other acoustic-only VAD is recommended to minimize speech distortion.

Depending on the application, β and γ may be fixed in the noise suppression algorithm or they can be estimated when the algorithm indicates that speech production is taking place in the presence of little or no noise. In either case, there may be an error in the estimate of the actual β and γ of the system. The following description examines these errors and their effect on the performance of the system. As above, "good performance" of the system indicates that there is sufficient denoising and minimal devoicing.

The effect of an incorrect β and γ on the response of V_1 and V_2 can be seen by examining the definitions above:

$$V_1(z) = O_1(z) \cdot z^{-\gamma_T} - \beta_T O_2(z)$$
$$V_2(z) = O_2(z) - z^{-\gamma_T} \beta_T O_1(z)$$

where β_T and γ_T denote the theoretical estimates of β and γ used in the noise suppression algorithm. In reality, the speech response of O_2 is

$$O_{2S}(z) = \beta_R O_{1S}(z) \cdot z^{-\gamma_R}$$

where β_R and γ_R denote the real β and γ of the physical system. The differences between the theoretical and actual values of β and γ can be due to mis-location of the speech source (it is not where it is assumed to be) and/or a change in air temperature (which changes the speed of sound). Inserting the actual response of O_2 for speech into the above equations for V_1 and V_2 yields

$$V_{1S}(z) = O_{1S}(z)\left[z^{-\gamma_T} - \beta_T \beta_R z^{-\gamma_R}\right]$$
$$V_{2S}(z) = O_{1S}(z)\left[\beta_R z^{-\gamma_R} - \beta_T z^{-\gamma_T}\right]$$

If the difference in phase is represented by

$$\gamma_R = \gamma_T + \gamma_D$$

And the difference in amplitude as

$$\beta_R = B\beta_T$$

then

$$V_{1S}(z) = O_{1S}(z) z^{-\gamma_T}\left[1 - B\beta_T^2 z^{-\gamma_D}\right]$$
$$V_{2S}(z) = \beta_T O_{1S}(z) z^{-\gamma_T}\left[B z^{-\gamma_D} - 1\right]. \qquad \text{Eq. 5}$$

The speech cancellation in V_2 (which directly affects the degree of devoicing) and the speech response of V_1 will be dependent on both B and D. An examination of the case where D = 0 follows. **Figure 15** is a plot showing speech response for V_1 (top, dashed) and V_2 (bottom, solid) versus B with d_s assumed to be 0.1 m, under an embodiment. This plot shows the spatial null in V_2 to be relatively broad.

Figure 16 is a plot showing a ratio of V_1/V_2 speech responses shown in **Figure 10** versus B, under an embodiment. The ratio of V_1/V_2 is above 10 dB for all $0.8 < B < 1.1$, and this means that the physical β of the system need not be exactly modeled for good performance. **Figure 17** is a plot of B versus actual d_s assuming that d_s = 10 cm and theta = 0, under an embodiment. **Figure 18** is a plot of B versus theta with d_s = 10 cm and assuming d_s = 10 cm, under an embodiment.

In **Figure 15**, the speech response for V_1 (upper, dashed) and V_2 (lower, solid) compared to O_1 is shown versus B when d_s is thought to be approximately 10 cm and $\theta = 0$. When B = 1, the speech is absent from V_2. In **Figure 16**, the ratio of the speech responses in **Figure 10** is shown. When $0.8 < B < 1.1$, the V_1/V_2 ratio is above approximately 10 dB – enough for good performance. Clearly, if D = 0, B can vary significantly without adversely affecting the performance of the system. Again, this assumes that calibration of the microphones so that both their amplitude and phase response is the same for an identical source has been performed.

The B factor can be non-unity for a variety of reasons. Either the distance to the speech source or the relative orientation of the array axis and the speech source or both can be different than expected. If both distance and angle mismatches are included for B, then

$$B = \frac{\beta_R}{\beta_T} \frac{\sqrt{d_{SR}^2 - 2d_{SR}d_0\cos(\theta_R) + d_0^2}}{\sqrt{d_{SR}^2 + 2d_{SR}d_0\cos(\theta_R) + d_0^2}} \cdot \frac{\sqrt{d_{ST}^2 + 2d_{ST}d_0\cos(\theta_T) + d_0^2}}{\sqrt{d_{ST}^2 - 2d_{ST}d_0\cos(\theta_T) + d_0^2}}$$

where again the T subscripts indicate the theorized values and R the actual values. In **Figure 17**, the factor B is plotted with respect to the actual d_s with the assumption that d_s = 10 cm and $\theta = 0$. So, if the speech source in on-axis of the array, the actual distance can vary from approximately 5 cm to 18 cm without significantly affecting performance – a significant amount. Similarly, **Figure 18** shows what happens if the speech source is located at a distance of approximately 10 cm but not on the axis of the array. In this case, the angle can vary up to approximately +-55 degrees and still result in a B less than 1.1, assuring good

performance. This is a significant amount of allowable angular deviation. If there is both angular and distance errors, the equation above may be used to determine if the deviations will result in adequate performance. Of course, if the value for β_T is allowed to update during speech, essentially tracking the speech source, then B can be kept near unity for almost all configurations.

An examination follows of the case where B is unity but D is nonzero. This can happen if the speech source is not where it is thought to be or if the speed of sound is different from what it is believed to be. From Equation 5 above, it can be sees that the factor that weakens the speech null in V_2 for speech is

$$N(z) = Bz^{-\gamma D} - 1$$

or in the continuous s domain

$$N(s) = Be^{-Ds} - 1.$$

Since γ is the time difference between arrival of speech at V_1 compared to V_2, it can be errors in estimation of the angular location of the speech source with respect to the axis of the array and/or by temperature changes. Examining the temperature sensitivity, the speed of sound varies with temperature as

$$c = 331.3 + (0.606T) \text{ m/s}$$

where T is degrees Celsius. As the temperature decreases, the speed of sound also decreases. Setting 20 C as a design temperature and a maximum expected temperature range to -40 C to +60 C (-40 F to 140 F). The design speed of sound at 20 C is 343 m/s and the slowest speed of sound will be 307 m/s at -40 C with the fastest speed of sound 362 m/s at 60 C. Set the array length ($2d_0$) to be 21 mm. For speech sources on the axis of the array, the difference in travel time for the largest change in the speed of sound is

$$\nabla t_{MAX} = \frac{d}{c_1} - \frac{d}{c_2} = 0.021\,\text{m}\left(\frac{1}{343\,\text{m/s}} - \frac{1}{307\,\text{m/s}}\right) = -7.2 \times 10^{-6} \text{ sec}$$

or approximately 7 microseconds. The response for N(s) given B = 1 and D = 7.2 μsec is shown in **Figure 19**. **Figure 19** is a plot of amplitude (top) and phase (bottom) response of N(s) with B = 1 and D = -7.2 μsec, under an embodiment. The resulting phase difference clearly affects high frequencies more than low. The amplitude response is less than approximately -10 dB for all frequencies less than 7 kHz and is only about -9 dB at 8 kHz. Therefore, assuming B = 1, this system would likely perform well at frequencies up to approximately 8 kHz. This means that a properly compensated system would work well even up to 8 kHz in an exceptionally wide (e.g., -40 C to 80 C) temperature range. Note that the phase mismatch due to the delay estimation error causes N(s) to be much larger at high frequencies compared to low.

If B is not unity, the robustness of the system is reduced since the effect from non-unity B is cumulative with that of non-zero D. **Figure 20** shows the amplitude and phase response for B = 1.2 and D = 7.2 μsec. **Figure 20** is a plot of amplitude (top) and phase (bottom) response of N(s) with B = 1.2 and D = -7.2 μsec, under an embodiment. Non-unity B affects the entire frequency range. Now N(s) is below approximately -10 dB only for frequencies less than approximately 5 kHz and the response at low frequencies is much larger. Such a system would still perform well below 5 kHz and would only suffer from slightly elevated devoicing for frequencies above 5 kHz. For ultimate performance, a temperature sensor may be integrated into the system to allow the algorithm to adjust γ_T as the temperature varies.

Another way in which D can be non-zero is when the speech source is not where it is believed to be – specifically, the angle from the axis of the array to the speech source is incorrect. The distance to the source may be incorrect as well, but that introduces an error in B, not D.

Referring to **Figure 2**, it can be seen that for two speech sources (each with their own d_s and θ) that the time difference between the arrival of the speech at O_1 and the arrival at O_2 is

$$\Delta t = \frac{1}{c}\left(d_{12} - d_{11} - d_{22} + d_{21}\right)$$

where

$$d_{11} = \sqrt{d_{S1}^2 - 2d_{S1}d_0\cos(\theta_1) + d_0^2}$$
$$d_{12} = \sqrt{d_{S1}^2 + 2d_{S1}d_0\cos(\theta_1) + d_0^2}$$
$$d_{21} = \sqrt{d_{S2}^2 - 2d_{S2}d_0\cos(\theta_2) + d_0^2}$$
$$d_{22} = \sqrt{d_{S2}^2 + 2d_{S2}d_0\cos(\theta_2) + d_0^2}$$

The V_2 speech cancellation response for θ_1 = 0 degrees and θ_2 = 30 degrees and assuming that B = 1 is shown in **Figure 21**. **Figure 21** is a plot of amplitude (top) and phase (bottom) response of the effect on the speech cancellation in V_2 due to a mistake in the location of the speech source with q1 = 0 degrees and q2 = 30 degrees, under an embodiment. Note that the cancellation is still below -10 dB for frequencies below 6 kHz. The cancellation is still below approximately -10 dB for frequencies below approximately 6 kHz, so an error of this type will not significantly affect the performance of the system. However, if θ_2 is increased to approximately 45 degrees, as shown in **Figure 22**, the cancellation is below approximately -10 dB only for frequencies below approximately 2.8 kHz. **Figure 22** is a plot of amplitude (top) and phase (bottom) response of the effect on the speech cancellation in V_2 due to a mistake in the location of the speech source with q1 = 0 degrees and q2 = 45 degrees, under an embodiment. Now the cancellation is below -10 dB only for frequencies below about 2.8 kHz and a reduction in performance is expected. The poor V_2 speech cancellation above approximately 4 kHz may result in significant devoicing for those frequencies.

The description above has assumed that the microphones O_1 and O_2 were calibrated so that their response to a source located the same distance away was identical for both amplitude and phase. This is not always feasible, so a more practical calibration procedure is presented below. It is not as accurate, but is much simpler to implement. Begin by defining a filter $\alpha(z)$ such that:

$$O_{1C}(z) = \alpha(z)O_{2C}(z)$$

where the "C" subscript indicates the use of a known calibration source. The simplest one to use is the speech of the user. Then

$$O_{1S}(z) = \alpha(z) O_{2C}(z)$$

The microphone definitions are now:

$$V_1(z) = O_1(z) \cdot z^{-\gamma} - \beta(z)\alpha(z)O_2(z)$$
$$V_2(z) = \alpha(z)O_2(z) - z^{-\gamma}\beta(z)O_1(z)$$

The β of the system should be fixed and as close to the real value as possible. In practice, the system is not sensitive to changes in β and errors of approximately +-5% are easily tolerated. During times when the user is producing speech but there is little or no noise, the system can train $\alpha(z)$ to remove as much speech as possible. This is accomplished by:

1. Construct an adaptive system as shown in **Figure 1** with $\beta O_{1S}(z)z^{-\gamma}$ in the "MIC1" position, $O_{2S}(z)$ in the "MIC2" position, and $\alpha(z)$ in the $H_1(z)$ position.
2. During speech, adapt $\alpha(z)$ to minimize the residual of the system.
3. Construct $V_1(z)$ and $V_2(z)$ as above.

A simple adaptive filter can be used for $\alpha(z)$ so that only the relationship between the microphones is well modeled. The system of an embodiment trains only when speech is being produced by the user. A sensor like the SSM is invaluable in determining when speech is being produced in the absence of noise. If the speech source is fixed in position and will not vary significantly during use (such as when the array is on an earpiece), the adaptation should be infrequent and slow to update in order to minimize any errors introduced by noise present during training.

The above formulation works very well because the noise (far-field) responses of V_1 and V_2 are very similar while the speech (near-field) responses are very different. However, the formulations for V_1 and V_2 can be varied and still result in good performance of the system as a whole. If the definitions for V_1 and V_2 are taken from above and new variables B1 and B2 are inserted, the result is:

$$V_1(z) = O_1(z) \cdot z^{-\gamma_T} - B_1\beta_T O_2(z)$$
$$V_2(z) = O_2(z) - z^{-\gamma_T} B_2\beta_T O_1(z)$$

where B1 and B2 are both positive numbers or zero. If B1 and B2 are set equal to unity, the optimal system results as described above. If B1 is allowed to vary from unity, the response of V_1 is affected. An examination of the case where B2 is left at 1 and B1 is decreased follows. As B1 drops to approximately zero, V_1 becomes less and less directional, until it becomes a simple omnidirectional microphone when B1 = 0. Since B2 = 1, a speech null remains in V_2, so very different speech responses remain for V_1 and V_2. However, the noise responses are much less similar, so denoising will not be as effective. Practically, though, the system still performs well. B1 can also be increased from unity and once again the system will still denoise well, just not as well as with B1 = 1.

If B2 is allowed to vary, the speech null in V_2 is affected. As long as the speech null is still sufficiently deep, the system will still perform well. Practically values down to approximately B2 = 0.6 have shown sufficient performance, but it is recommended to set B2 close to unity for optimal performance.

Similarly, variables ε and Δ may be introduced so that:

$$V_1(z) = (\varepsilon - \beta)O_{2N}(z) + (1 + \Delta)O_{1N}(z)z^{-\gamma}$$
$$V_2(z) = (1 + \Delta)O_{2N}(z) + (\varepsilon - \beta)O_{1N}(z)z^{-\gamma}$$

This formulation also allows the virtual microphone responses to be varied but retains the all-pass characteristic of $H_1(z)$.

In conclusion, the system is flexible enough to operate well at a variety of B1 values, but B2 values should be close to unity to limit devoicing for best performance.

Experimental results for a $2d_0$ = 19 mm array using a linear β of 0.83 and B1 = B2 = 1 on a Bruel and Kjaer Head and Torso Simulator (HATS) in very loud (~85 dBA) music/speech noise environment are shown in **Figure 23**. The alternate microphone calibration technique discussed above was used to calibrate the

microphones. The noise has been reduced by about 25 dB and the speech hardly affected, with no noticeable distortion. Clearly the technique significantly increases the SNR of the original speech, far outperforming conventional noise suppression techniques.

The DOMA can be a component of a single system, multiple systems, and/or geographically separate systems. The DOMA can also be a subcomponent or subsystem of a single system, multiple systems, and/or geographically separate systems. The DOMA can be coupled to one or more other components (not shown) of a host system or a system coupled to the host system.

One or more components of the DOMA and/or a corresponding system or application to which the DOMA is coupled or connected includes and/or runs under and/or in association with a processing system. The processing system includes any collection of processor-based devices or computing devices operating together, or components of processing systems or devices, as is known in the art. For example, the processing system can include one or more of a portable computer, portable communication device operating in a communication network, and/or a network server. The portable computer can be any of a number and/or combination of devices selected from among personal computers, cellular telephones, personal digital assistants, portable computing devices, and portable communication devices, but is not so limited. The processing system can include components within a larger computer system.

The processing system of an embodiment includes at least one processor and at least one memory device or subsystem. The processing system can also include or be coupled to at least one database. The term "processor" as generally used herein refers to any logic processing unit, such as one or more central processing units (CPUs), digital signal processors (DSPs), application-specific integrated circuits (ASIC), etc. The processor and memory can be monolithically integrated onto a single chip, distributed among a number of chips or components, and/or provided by some combination of algorithms. The methods described herein can be implemented in one or more of software algorithm(s), programs, firmware, hardware, components, circuitry, in any combination.

The components of any system that includes the DOMA can be located together or in separate locations. Communication paths couple the components and include any medium for communicating or transferring files among the components. The communication paths include wireless connections, wired connections, and hybrid wireless/wired connections. The communication paths also include couplings or connections to networks including local area networks (LANs), metropolitan area networks (MANs), wide area networks (WANs), proprietary networks, interoffice or backend networks, and the Internet. Furthermore, the communication paths include removable fixed mediums like floppy disks, hard disk drives, and CD-ROM disks, as well as flash RAM, Universal Serial Bus (USB) connections, RS-232 connections, telephone lines, buses, and electronic mail messages.

Embodiments of the DOMA described herein include a microphone array comprising: a first virtual microphone comprising a first combination of a first microphone signal and a second microphone signal, wherein the first microphone signal is generated by a first physical microphone and the second microphone signal is generated by a second physical microphone; and a second virtual microphone comprising a second combination of the first microphone signal and the second microphone signal, wherein the second combination is different from the first combination, wherein the first virtual microphone and the second virtual microphone are distinct virtual directional microphones with substantially similar responses to noise and substantially dissimilar responses to speech.

The first and second physical microphones of an embodiment are omnidirectional.

The first virtual microphone of an embodiment has a first linear response to speech that is devoid of a null, wherein the speech is human speech.

The second virtual microphone of an embodiment has a second linear response to speech that includes a single null oriented in a direction toward a source of the speech.

The single null of an embodiment is a region of the second linear response having a measured response level that is lower than the measured response level of any other region of the second linear response.

The second linear response of an embodiment includes a primary lobe oriented in a direction away from the source of the speech.

The primary lobe of an embodiment is a region of the second linear response having a measured response level that is greater than the measured response level of any other region of the second linear response.

The first physical microphone and the second physical microphone of an embodiment are positioned along an axis and separated by a first distance.

A midpoint of the axis of an embodiment is a second distance from a speech source that generates the speech, wherein the speech source is located in a direction defined by an angle relative to the midpoint.

The first virtual microphone of an embodiment comprises the second microphone signal subtracted from the first microphone signal.

The first microphone signal of an embodiment is delayed.

The delay of an embodiment is raised to a power that is proportional to a time difference between arrival of the speech at the first virtual microphone and arrival of the speech at the second virtual microphone.

The delay of an embodiment is raised to a power that is proportional to a sampling frequency multiplied by a quantity equal to a third distance subtracted from a fourth distance, the third distance being between the first physical microphone and the speech source and the fourth distance being between the second physical microphone and the speech source.

The second microphone signal of an embodiment is multiplied by a ratio, wherein the ratio is a ratio of a third distance to a fourth distance, the third distance being between the first physical microphone and the speech source and the fourth distance being between the second physical microphone and the speech source.

The second virtual microphone of an embodiment comprises the first microphone signal subtracted from the second microphone signal.

The first microphone signal of an embodiment is delayed.

The delay of an embodiment is raised to a power that is proportional to a time difference between arrival of the speech at the first virtual microphone and arrival of the speech at the second virtual microphone.

The power of an embodiment is proportional to a sampling frequency multiplied by a quantity equal to a third distance subtracted from a fourth distance, the third distance being between the first physical microphone and the speech source and the fourth distance being between the second physical microphone and the speech source.

The first microphone signal of an embodiment is multiplied by a ratio, wherein the ratio is a ratio of the third distance to the fourth distance.

The single null of an embodiment is located at a distance from at least one of the first physical microphone and the second physical microphone where the source of the speech is expected to be.

The first virtual microphone of an embodiment comprises the second microphone signal subtracted from a delayed version of the first microphone signal.

The second virtual microphone of an embodiment comprises a delayed version of the first microphone signal subtracted from the second microphone signal.

Embodiments of the DOMA described herein include a microphone array comprising: a first virtual microphone formed from a first combination of a first microphone signal and a second microphone signal, wherein the first microphone signal is generated by a first omnidirectional microphone and the second microphone signal is generated by a second omnidirectional microphone; and a second virtual microphone formed from a second combination of the first microphone signal and the second microphone signal, wherein the second combination is different from the first combination; wherein the first virtual microphone has a first linear response to speech that is devoid of a null, wherein the second virtual microphone has a second linear response to speech that has a single null oriented in a direction toward a source of the speech, wherein the speech is human speech.

The first virtual microphone and the second virtual microphone of an embodiment have a linear response to noise that is substantially similar.

The single null of an embodiment is a region of the second linear response having a measured response level that is lower than the measured response level of any other region of the second linear response.

The second linear response of an embodiment includes a primary lobe oriented in a direction away from the source of the speech.

The primary lobe of an embodiment is a region of the second linear response having a measured response level that is greater than the measured response level of any other region of the second linear response.

Embodiments of the DOMA described herein include a device comprising: a first microphone outputting a first microphone signal and a second microphone outputting a second microphone signal; and a processing component coupled to the first microphone signal and the second microphone signal, the processing component generating a virtual microphone array comprising a first virtual microphone and a second virtual microphone, wherein the first virtual microphone comprises a first combination of the first microphone signal and the second microphone signal, wherein the second virtual microphone comprises a second combination of the first microphone signal and the second microphone signal, wherein the second combination is different from the first combination, wherein the first virtual microphone and the second virtual microphone have substantially similar responses to noise and substantially dissimilar responses to speech.

Embodiments of the DOMA described herein include a device comprising: a first microphone outputting a first microphone signal and a second microphone outputting a second microphone signal, wherein the first microphone and the second microphone are omnidirectional microphones; and a virtual microphone array comprising a first virtual microphone and a second virtual microphone, wherein the first virtual microphone comprises a first combination of the first microphone signal and the second microphone signal, wherein the second virtual microphone comprises a second combination of the first microphone signal and the second microphone signal, wherein the second combination is different from the first combination, wherein the first virtual microphone and the second virtual microphone are distinct virtual directional microphones.

Embodiments of the DOMA described herein include a device comprising: a first physical microphone generating a first microphone signal; a second physical microphone generating a second microphone signal; and a processing component coupled to the first microphone signal and the second microphone signal, the

processing component generating a virtual microphone array comprising a first virtual microphone and a second virtual microphone; wherein the first virtual microphone comprises the second microphone signal subtracted from a delayed version of the first microphone signal; wherein the second virtual microphone comprises a delayed version of the first microphone signal subtracted from the second microphone signal.

The first virtual microphone of an embodiment has a first linear response to speech that is devoid of a null, wherein the speech is human speech.

The second virtual microphone of an embodiment has a second linear response to speech that includes a single null oriented in a direction toward a source of the speech.

The single null of an embodiment is a region of the second linear response having a measured response level that is lower than the measured response level of any other region of the second linear response.

The second linear response of an embodiment includes a primary lobe oriented in a direction away from the source of the speech.

The primary lobe of an embodiment is a region of the second linear response having a measured response level that is greater than the measured response level of any other region of the second linear response.

The first physical microphone and the second physical microphone of an embodiment are positioned along an axis and separated by a first distance.

A midpoint of the axis of an embodiment is a second distance from a speech source that generates the speech, wherein the speech source is located in a direction defined by an angle relative to the midpoint.

One or more of the first microphone signal and the second microphone signal of an embodiment is delayed.

The delay of an embodiment is raised to a power that is proportional to a time difference between arrival of the speech at the first virtual microphone and arrival of the speech at the second virtual microphone.

The power of an embodiment is proportional to a sampling frequency multiplied by a quantity equal to a third distance subtracted from a fourth distance, the third distance being between the first physical microphone and the speech

source and the fourth distance being between the second physical microphone and the speech source.

One or more of the first microphone signal and the second microphone signal of an embodiment is multiplied by a gain factor.

Embodiments of the DOMA described herein include a sensor comprising: a physical microphone array including a first physical microphone and a second physical microphone, the first physical microphone outputting a first microphone signal and the second physical microphone outputting a second microphone signal; a virtual microphone array comprising a first virtual microphone and a second virtual microphone, the first virtual microphone comprising a first combination of the first microphone signal and the second microphone signal, the second virtual microphone comprising a second combination of the first microphone signal and the second microphone signal, wherein the second combination is different from the first combination; the virtual microphone array including a single null oriented in a direction toward a source of speech of a human speaker.

The first virtual microphone of an embodiment has a first linear response to speech that is devoid of a null, wherein the second virtual microphone has a second linear response to speech that includes the single null.

The first virtual microphone and the second virtual microphone of an embodiment have a linear response to noise that is substantially similar.

The single null of an embodiment is a region of the second linear response to speech having a measured response level that is lower than the measured response level of any other region of the second linear response.

The second linear response to speech of an embodiment includes a primary lobe oriented in a direction away from the source of the speech.

The primary lobe of an embodiment is a region of the second linear response having a measured response level that is greater than the measured response level of any other region of the second linear response.

The single null of an embodiment is located at a distance from the physical microphone array where the source of the speech is expected to be.

Embodiments of the DOMA described herein include a device comprising: a headset including at least one loudspeaker, wherein the headset attaches to a

region of a human head; a microphone array connected to the headset, the microphone array including a first physical microphone outputting a first microphone signal and a second physical microphone outputting a second microphone signal; and a processing component coupled to the microphone array and generating a virtual microphone array comprising a first virtual microphone and a second virtual microphone, the first virtual microphone comprising a first combination of the first microphone signal and the second microphone signal, the second virtual microphone comprising a second combination of the first microphone signal and the second microphone signal, wherein the second combination is different from the first combination, wherein the first virtual microphone and the second virtual microphone have substantially similar responses to noise and substantially dissimilar responses to speech.

The first and second physical microphones of an embodiment are omnidirectional.

The first virtual microphone of an embodiment has a first linear response to speech that is devoid of a null, wherein the speech is human speech.

The second virtual microphone of an embodiment has a second linear response to speech that includes a single null oriented in a direction toward a source of the speech.

The single null of an embodiment is a region of the second linear response having a measured response level that is lower than the measured response level of any other region of the second linear response.

The second linear response of an embodiment includes a primary lobe oriented in a direction away from the source of the speech.

The primary lobe of an embodiment is a region of the second linear response having a measured response level that is greater than the measured response level of any other region of the second linear response.

The first physical microphone and the second physical microphone of an embodiment are positioned along an axis and separated by a first distance.

A midpoint of the axis of an embodiment is a second distance from a speech source that generates the speech, wherein the speech source is located in a direction defined by an angle relative to the midpoint.

The first virtual microphone of an embodiment comprises the second microphone signal subtracted from the first microphone signal.

The first microphone signal of an embodiment is delayed.

The delay of an embodiment is raised to a power that is proportional to a time difference between arrival of the speech at the first virtual microphone and arrival of the speech at the second virtual microphone.

The delay of an embodiment is raised to a power that is proportional to a sampling frequency multiplied by a quantity equal to a third distance subtracted from a fourth distance, the third distance being between the first physical microphone and the speech source and the fourth distance being between the second physical microphone and the speech source.

The second microphone signal of an embodiment is multiplied by a ratio, wherein the ratio is a ratio of a third distance to a fourth distance, the third distance being between the first physical microphone and the speech source and the fourth distance being between the second physical microphone and the speech source.

The second virtual microphone of an embodiment comprises the first microphone signal subtracted from the second microphone signal.

The first microphone signal of an embodiment is delayed.

The delay of an embodiment is raised to a power that is proportional to a time difference between arrival of the speech at the first virtual microphone and arrival of the speech at the second virtual microphone.

The power of an embodiment is proportional to a sampling frequency multiplied by a quantity equal to a third distance subtracted from a fourth distance, the third distance being between the first physical microphone and the speech source and the fourth distance being between the second physical microphone and the speech source.

The first microphone signal of an embodiment is multiplied by a ratio, wherein the ratio is a ratio of the third distance to the fourth distance.

The first virtual microphone of an embodiment comprises the second microphone signal subtracted from a delayed version of the first microphone signal.

The second virtual microphone of an embodiment comprises a delayed version of the first microphone signal subtracted from the second microphone signal.

A speech source that generates the speech of an embodiment is a mouth of a human wearing the headset.

The device of an embodiment comprises a voice activity detector (VAD) coupled to the processing component, the VAD generating voice activity signals.

The device of an embodiment comprises an adaptive noise removal application coupled to the processing component, the adaptive noise removal application receiving signals from the first and second virtual microphones and generating an output signal, wherein the output signal is a denoised acoustic signal.

The microphone array of an embodiment receives acoustic signals including acoustic speech and acoustic noise.

The device of an embodiment comprises a communication channel coupled to the processing component, the communication channel comprising at least one of a wireless channel, a wired channel, and a hybrid wireless/wired channel.

The device of an embodiment comprises a communication device coupled to the headset via the communication channel, the communication device comprising one or more of cellular telephones, satellite telephones, portable telephones, wireline telephones, Internet telephones, wireless transceivers, wireless communication radios, personal digital assistants (PDAs), and personal computers (PCs).

Embodiments of the DOMA described herein include a device comprising: a housing; a loudspeaker connected to the housing; a first physical microphone and a second physical microphone connected to the housing, the first physical microphone outputting a first microphone signal and the second physical microphone outputting a second microphone signal, wherein the first and second physical microphones are omnidirectional; a first virtual microphone comprising a first combination of the first microphone signal and the second microphone signal; and a second virtual microphone comprising a second combination of the first microphone signal and the second microphone signal, wherein the second combination is different from the first combination, wherein the first virtual microphone and the second virtual

microphone are distinct virtual directional microphones with substantially similar responses to noise and substantially dissimilar responses to speech.

Embodiments of the DOMA described herein include a device comprising: a housing including a loudspeaker, wherein the housing is portable and configured for attaching to a mobile object; and a physical microphone array connected to the headset, the physical microphone array including a first physical microphone and a second physical microphone that form a virtual microphone array comprising a first virtual microphone and a second virtual microphone; the first virtual microphone comprising a first combination of a first microphone signal and a second microphone signal, wherein the first microphone signal is generated by the first physical microphone and the second microphone signal is generated by the second physical microphone; and the second virtual microphone comprising a second combination of the first microphone signal and the second microphone signal, wherein the second combination is different from the first combination; wherein the first virtual microphone has a first linear response to speech that is devoid of a null, wherein the second virtual microphone has a second linear response to speech that has a single null oriented in a direction toward a source of the speech, wherein the speech is human speech.

The first virtual microphone and the second virtual microphone of an embodiment have a linear response to noise that is substantially similar.

The single null of an embodiment is a region of the second linear response having a measured response level that is lower than the measured response level of any other region of the second linear response.

The second linear response of an embodiment includes a primary lobe oriented in a direction away from the source of the speech.

The primary lobe of an embodiment is a region of the second linear response having a measured response level that is greater than the measured response level of any other region of the second linear response.

Embodiments of the DOMA described herein include a device comprising: a housing that is attached to a region of a human speaker; a loudspeaker connected to the housing; and a physical microphone array including a first physical microphone and a second physical microphone connected to the housing, the first

physical microphone outputting a first microphone signal and the second physical microphone outputting a second microphone signal that in combination form a virtual microphone array; the virtual microphone array comprising a first virtual microphone and a second virtual microphone, the first virtual microphone comprising a first combination of the first microphone signal and the second microphone signal, the second virtual microphone comprising a second combination of the first microphone signal and the second microphone signal, wherein the second combination is different from the first combination; the virtual microphone array including a single null oriented in a direction toward a source of speech of the human speaker.

The first virtual microphone of an embodiment has a first linear response to speech that is devoid of a null, wherein the second virtual microphone has a second linear response to speech that includes the single null.

The first virtual microphone and the second virtual microphone of an embodiment have a linear response to noise that is substantially similar.

The single null of an embodiment is a region of the second linear response to speech having a measured response level that is lower than the measured response level of any other region of the second linear response.

The second linear response to speech of an embodiment includes a primary lobe oriented in a direction away from the source of the speech.

The primary lobe of an embodiment is a region of the second linear response having a measured response level that is greater than the measured response level of any other region of the second linear response.

The single null of an embodiment is located at a distance from the physical microphone array where the source of the speech is expected to be.

Embodiments of the DOMA described herein include a system comprising: a microphone array including a first physical microphone outputting a first microphone signal and a second physical microphone outputting a second microphone signal; a processing component coupled to the microphone array and generating a virtual microphone array comprising a first virtual microphone and a second virtual microphone, the first virtual microphone comprising a first combination of the first microphone signal and the second microphone signal, the

second virtual microphone comprising a second combination of the first microphone signal and the second microphone signal, wherein the second combination is different from the first combination, wherein the first virtual microphone and the second virtual microphone have substantially similar responses to noise and substantially dissimilar responses to speech; and an adaptive noise removal application coupled to the processing component and generating denoised output signals by forming a plurality of combinations of signals output from the first virtual microphone and the second virtual microphone, wherein the denoised output signals include less acoustic noise than acoustic signals received at the microphone array.

The first and second physical microphones of an embodiment are omnidirectional.

The first virtual microphone of an embodiment has a first linear response to speech that is devoid of a null, wherein the speech is human speech.

The second virtual microphone of an embodiment has a second linear response to speech that includes a single null oriented in a direction toward a source of the speech.

The single null of an embodiment is a region of the second linear response having a measured response level that is lower than the measured response level of any other region of the second linear response.

The second linear response of an embodiment includes a primary lobe oriented in a direction away from the source of the speech.

The primary lobe of an embodiment is a region of the second linear response having a measured response level that is greater than the measured response level of any other region of the second linear response.

The first physical microphone and the second physical microphone of an embodiment are positioned along an axis and separated by a first distance.

A midpoint of the axis of an embodiment is a second distance from a speech source that generates the speech, wherein the speech source is located in a direction defined by an angle relative to the midpoint.

The first virtual microphone of an embodiment comprises the second microphone signal subtracted from the first microphone signal.

The first microphone signal of an embodiment is delayed.

The delay of an embodiment is raised to a power that is proportional to a time difference between arrival of the speech at the first virtual microphone and arrival of the speech at the second virtual microphone.

The delay of an embodiment is raised to a power that is proportional to a sampling frequency multiplied by a quantity equal to a third distance subtracted from a fourth distance, the third distance being between the first physical microphone and the speech source and the fourth distance being between the second physical microphone and the speech source.

The second microphone signal of an embodiment is multiplied by a ratio, wherein the ratio is a ratio of a third distance to a fourth distance, the third distance being between the first physical microphone and the speech source and the fourth distance being between the second physical microphone and the speech source.

The second virtual microphone of an embodiment comprises the first microphone signal subtracted from the second microphone signal.

The first microphone signal of an embodiment is delayed.

The delay of an embodiment is raised to a power that is proportional to a time difference between arrival of the speech at the first virtual microphone and arrival of the speech at the second virtual microphone.

The power of an embodiment is proportional to a sampling frequency multiplied by a quantity equal to a third distance subtracted from a fourth distance, the third distance being between the first physical microphone and the speech source and the fourth distance being between the second physical microphone and the speech source.

The first microphone signal of an embodiment is multiplied by a ratio, wherein the ratio is a ratio of the third distance to the fourth distance.

The first virtual microphone of an embodiment comprises the second microphone signal subtracted from a delayed version of the first microphone signal.

The second virtual microphone of an embodiment comprises a delayed version of the first microphone signal subtracted from the second microphone signal.

The system of an embodiment comprises a voice activity detector (VAD) coupled to the processing component, the VAD generating voice activity signals.

The system of an embodiment comprises a communication channel coupled to the processing component, the communication channel comprising at least one of a wireless channel, a wired channel, and a hybrid wireless/wired channel.

The system of an embodiment comprises a communication device coupled to the processing component via the communication channel, the communication device comprising one or more of cellular telephones, satellite telephones, portable telephones, wireline telephones, Internet telephones, wireless transceivers, wireless communication radios, personal digital assistants (PDAs), and personal computers (PCs).

Embodiments of the DOMA described herein include a system comprising: a first virtual microphone formed from a first combination of a first microphone signal and a second microphone signal, wherein the first microphone signal is generated by a first physical microphone and the second microphone signal is generated by a second physical microphone; a second virtual microphone formed from a second combination of the first microphone signal and the second microphone signal, wherein the second combination is different from the first combination; wherein the first virtual microphone has a first linear response to speech that is devoid of a null, wherein the second virtual microphone has a second linear response to speech that has a single null oriented in a direction toward a source of the speech, wherein the speech is human speech; an adaptive noise removal application coupled to the first and second virtual microphones and generating denoised output signals by forming a plurality of combinations of signals output from the first virtual microphone and the second virtual microphone, wherein the denoised output signals include less acoustic noise than acoustic signals received at the first and second physical microphones.

The first virtual microphone and the second virtual microphone of an embodiment have a linear response to noise that is substantially similar.

The single null of an embodiment is a region of the second linear response having a measured response level that is lower than the measured response level of any other region of the second linear response.

The second linear response of an embodiment includes a primary lobe oriented in a direction away from the source of the speech.

The primary lobe of an embodiment is a region of the second linear response having a measured response level that is greater than the measured response level of any other region of the second linear response.

Embodiments of the DOMA described herein include a system comprising: a first microphone outputting a first microphone signal and a second microphone outputting a second microphone signal, wherein the first microphone and the second microphone are omnidirectional microphones; a virtual microphone array comprising a first virtual microphone and a second virtual microphone, wherein the first virtual microphone comprises a first combination of the first microphone signal and the second microphone signal, wherein the second virtual microphone comprises a second combination of the first microphone signal and the second microphone signal, wherein the second combination is different from the first combination, wherein the first virtual microphone and the second virtual microphone are distinct virtual directional microphones; and an adaptive noise removal application coupled to the virtual microphone array and generating denoised output signals by forming a plurality of combinations of signals output from the first virtual microphone and the second virtual microphone, wherein the denoised output signals include less acoustic noise than acoustic signals received at the first microphone and the second microphone.

Embodiments of the DOMA described herein include a system comprising: a first physical microphone generating a first microphone signal; a second physical microphone generating a second microphone signal; a processing component coupled to the first microphone signal and the second microphone signal, the processing component generating a virtual microphone array comprising a first virtual microphone and a second virtual microphone; and wherein the first virtual microphone comprises the second microphone signal subtracted from a delayed version of the first microphone signal; wherein the second virtual microphone comprises a delayed version of the first microphone signal subtracted from the second microphone signal; an adaptive noise removal application coupled to the processing component and generating denoised output signals, wherein the

denoised output signals include less acoustic noise than acoustic signals received at the first physical microphone and the second physical microphone.

The first virtual microphone of an embodiment has a first linear response to speech that is devoid of a null, wherein the speech is human speech.

The second virtual microphone of an embodiment has a second linear response to speech that includes a single null oriented in a direction toward a source of the speech.

The single null of an embodiment is a region of the second linear response having a measured response level that is lower than the measured response level of any other region of the second linear response.

The second linear response of an embodiment includes a primary lobe oriented in a direction away from the source of the speech.

The primary lobe of an embodiment is a region of the second linear response having a measured response level that is greater than the measured response level of any other region of the second linear response.

The first physical microphone and the second physical microphone of an embodiment are positioned along an axis and separated by a first distance.

A midpoint of the axis of an embodiment is a second distance from a speech source that generates the speech, wherein the speech source is located in a direction defined by an angle relative to the midpoint.

One or more of the first microphone signal and the second microphone signal of an embodiment is delayed.

The delay of an embodiment is raised to a power that is proportional to a time difference between arrival of the speech at the first virtual microphone and arrival of the speech at the second virtual microphone.

The power of an embodiment is proportional to a sampling frequency multiplied by a quantity equal to a third distance subtracted from a fourth distance, the third distance being between the first physical microphone and the speech source and the fourth distance being between the second physical microphone and the speech source.

One or more of the first microphone signal and the second microphone signal of an embodiment is multiplied by a gain factor.

The system of an embodiment comprises a voice activity detector (VAD) coupled to the processing component, the VAD generating voice activity signals.

The system of an embodiment comprises a communication channel coupled to the processing component, the communication channel comprising at least one of a wireless channel, a wired channel, and a hybrid wireless/wired channel.

The system of an embodiment comprises a communication device coupled to the processing component via the communication channel, the communication device comprising one or more of cellular telephones, satellite telephones, portable telephones, wireline telephones, Internet telephones, wireless transceivers, wireless communication radios, personal digital assistants (PDAs), and personal computers (PCs).

Embodiments of the DOMA described herein include a system comprising: a physical microphone array including a first physical microphone and a second physical microphone, the first physical microphone outputting a first microphone signal and the second physical microphone outputting a second microphone signal; a virtual microphone array comprising a first virtual microphone and a second virtual microphone, the first virtual microphone comprising a first combination of the first microphone signal and the second microphone signal, the second virtual microphone comprising a second combination of the first microphone signal and the second microphone signal, wherein the second combination is different from the first combination; the virtual microphone array including a single null oriented in a direction toward a source of speech of a human speaker; and an adaptive noise removal application coupled to the virtual microphone array and generating denoised output signals by forming a plurality of combinations of signals output from the virtual microphone array, wherein the denoised output signals include less acoustic noise than acoustic signals received at the physical microphone array.

The first virtual microphone of an embodiment has a first linear response to speech that is devoid of a null, wherein the second virtual microphone of an embodiment has a second linear response to speech that includes the single null.

The first virtual microphone and the second virtual microphone of an embodiment have a linear response to noise that is substantially similar.

The single null of an embodiment is a region of the second linear response to speech having a measured response level that is lower than the measured response level of any other region of the second linear response.

The second linear response to speech of an embodiment includes a primary lobe oriented in a direction away from the source of the speech.

The primary lobe of an embodiment is a region of the second linear response having a measured response level that is greater than the measured response level of any other region of the second linear response.

The single null of an embodiment is located at a distance from the physical microphone array where the source of the speech is expected to be.

Embodiments of the DOMA described herein include a system comprising: a first virtual microphone comprising a first combination of a first microphone signal and a second microphone signal, wherein the first microphone signal is output from a first physical microphone and the second microphone signal is output from a second physical microphone; a second virtual microphone comprising a second combination of the first microphone signal and the second microphone signal, wherein the second combination is different from the first combination, wherein the first virtual microphone and the second virtual microphone are distinct virtual directional microphones with substantially similar responses to noise and substantially dissimilar responses to speech; and a processing component coupled to the first and second virtual microphones, the processing component including an adaptive noise removal application receiving acoustic signals from the first virtual microphone and the second virtual microphone and generating an output signal, wherein the output signal is a denoised acoustic signal.

Embodiments of the DOMA described herein include a method comprising: forming a first virtual microphone by generating a first combination of a first microphone signal and a second microphone signal, wherein the first microphone signal is generated by a first physical microphone and the second microphone signal is generated by a second physical microphone; and forming a second virtual microphone by generating a second combination of the first microphone signal and the second microphone signal, wherein the second combination is different from the first combination, wherein the first virtual microphone and the second virtual

microphone are distinct virtual directional microphones with substantially similar responses to noise and substantially dissimilar responses to speech.

Forming the first virtual microphone of an embodiment includes forming the first virtual microphone to have a first linear response to speech that is devoid of a null, wherein the speech is human speech.

Forming the second virtual microphone of an embodiment includes forming the second virtual microphone to have a second linear response to speech that includes a single null oriented in a direction toward a source of the speech.

The single null of an embodiment is a region of the second linear response having a measured response level that is lower than the measured response level of any other region of the second linear response.

The second linear response of an embodiment includes a primary lobe oriented in a direction away from the source of the speech.

The primary lobe of an embodiment is a region of the second linear response having a measured response level that is greater than the measured response level of any other region of the second linear response.

The method of an embodiment comprises positioning the first physical microphone and the second physical microphone along an axis and separating the first and second physical microphones by a first distance.

A midpoint of the axis of an embodiment is a second distance from a speech source that generates the speech, wherein the speech source is located in a direction defined by an angle relative to the midpoint.

Forming the first virtual microphone of an embodiment comprises subtracting the second microphone signal subtracted from the first microphone signal.

The method of an embodiment comprises delaying the first microphone signal.

The method of an embodiment comprises raising the delay to a power that is proportional to a time difference between arrival of the speech at the first virtual microphone and arrival of the speech at the second virtual microphone.

The method of an embodiment comprises raising the delay to a power that is proportional to a sampling frequency multiplied by a quantity equal to a third distance subtracted from a fourth distance, the third distance being between the

first physical microphone and the speech source and the fourth distance being between the second physical microphone and the speech source.

The method of an embodiment comprises multiplying the second microphone signal by a ratio, wherein the ratio is a ratio of a third distance to a fourth distance, the third distance being between the first physical microphone and the speech source and the fourth distance being between the second physical microphone and the speech source.

Forming the second virtual microphone of an embodiment comprises subtracting the first microphone signal from the second microphone signal.

The method of an embodiment comprises delaying the first microphone signal.

The method of an embodiment comprises raising the delay to a power that is proportional to a time difference between arrival of the speech at the first virtual microphone and arrival of the speech at the second virtual microphone.

The method of an embodiment comprises raising the delay to a power that is proportional to a sampling frequency multiplied by a quantity equal to a third distance subtracted from a fourth distance, the third distance being between the first physical microphone and the speech source and the fourth distance being between the second physical microphone and the speech source.

The method of an embodiment comprises multiplying the first microphone signal by a ratio, wherein the ratio is a ratio of the third distance to the fourth distance.

Forming the first virtual microphone of an embodiment comprises subtracting the second microphone signal from a delayed version of the first microphone signal.

Forming the second virtual microphone of an embodiment comprises: forming a quantity by delaying the first microphone signal; and subtracting the quantity from the second microphone signal.

The first and second physical microphones of an embodiment are omnidirectional.

Embodiments of the DOMA described herein include a method comprising: receiving a first microphone signal from a first omnidirectional microphone and receiving a second microphone signal from a second omnidirectional microphone;

generating a first virtual directional microphone by generating a first combination of the first microphone signal and the second microphone signal; generating a second virtual directional microphone by generating a second combination of the first microphone signal and the second microphone signal, wherein the second combination is different from the first combination, wherein the first virtual microphone and the second virtual microphone are distinct virtual directional microphones with substantially similar responses to noise and substantially dissimilar responses to speech.

Embodiments of the DOMA described herein include a method of forming a microphone array comprising: forming a first virtual microphone by generating a first combination of a first microphone signal and a second microphone signal, wherein the first microphone signal is generated by a first omnidirectional microphone and the second microphone signal is generated by a second omnidirectional microphone; and forming a second virtual microphone by generating a second combination of the first microphone signal and the second microphone signal, wherein the second combination is different from the first combination; wherein the first virtual microphone has a first linear response to speech that is devoid of a null, wherein the second virtual microphone has a second linear response to speech that has a single null oriented in a direction toward a source of the speech, wherein the speech is human speech.

Forming the first and second virtual microphones of an embodiment comprises forming the first virtual microphone and the second virtual microphone to have a linear response to noise that is substantially similar.

The single null of an embodiment is a region of the second linear response having a measured response level that is lower than the measured response level of any other region of the second linear response.

The second linear response of an embodiment includes a primary lobe oriented in a direction away from the source of the speech.

The primary lobe of an embodiment is a region of the second linear response having a measured response level that is greater than the measured response level of any other region of the second linear response.

Embodiments of the DOMA described herein include a method comprising: receiving acoustic signals at a first physical microphone and a second physical microphone; outputting in response to the acoustic signals a first microphone signal from the first physical microphone and outputting a second microphone signal from the second physical microphone; forming a first virtual microphone by generating a first combination of the first microphone signal and the second microphone signal; forming a second virtual microphone by generating a second combination of the first microphone signal and the second microphone signal, wherein the second combination is different from the first combination, wherein the first virtual microphone and the second virtual microphone are distinct virtual directional microphones with substantially similar responses to noise and substantially dissimilar responses to speech; generating output signals by combining signals from the first virtual microphone and the second virtual microphone, wherein the output signals include less acoustic noise than the acoustic signals.

The first and second physical microphones of an embodiment are omnidirectional microphones.

Forming the first virtual microphone of an embodiment includes forming the first virtual microphone to have a first linear response to speech that is devoid of a null, wherein the speech is human speech.

Forming the second virtual microphone of an embodiment includes forming the second virtual microphone to have a second linear response to speech that includes a single null oriented in a direction toward a source of the speech.

The single null of an embodiment is a region of the second linear response having a measured response level that is lower than the measured response level of any other region of the second linear response.

The second linear response of an embodiment includes a primary lobe oriented in a direction away from the source of the speech.

The primary lobe of an embodiment is a region of the second linear response having a measured response level that is greater than the measured response level of any other region of the second linear response.

Forming the first virtual microphone of an embodiment comprises subtracting the second microphone signal from a delayed version of the first microphone signal.

Forming the second virtual microphone of an embodiment comprises: forming a quantity by delaying the first microphone signal; and subtracting the quantity from the second microphone signal.

Embodiments of the DOMA described herein include a method comprising: forming a physical microphone array including a first physical microphone and a second physical microphone, the first physical microphone outputting a first microphone signal and the second physical microphone outputting a second microphone signal; and forming a virtual microphone array comprising a first virtual microphone and a second virtual microphone, the first virtual microphone comprising a first combination of the first microphone signal and the second microphone signal, the second virtual microphone comprising a second combination of the first microphone signal and the second microphone signal, wherein the second combination is different from the first combination; the virtual microphone array including a single null oriented in a direction toward a source of speech of a human speaker.

Forming the first and second virtual microphones of an embodiment comprises forming the first virtual microphone and the second virtual microphone to have a linear response to noise that is substantially similar.

The single null of an embodiment is a region of the second linear response having a measured response level that is lower than the measured response level of any other region of the second linear response.

The second linear response of an embodiment includes a primary lobe oriented in a direction away from the source of the speech.

The primary lobe of an embodiment is a region of the second linear response having a measured response level that is greater than the measured response level of any other region of the second linear response.

The single null of an embodiment is located at a distance from the physical microphone array where the source of the speech is expected to be.

Aspects of the DOMA and corresponding systems and methods described herein may be implemented as functionality programmed into any of a variety of circuitry, including programmable logic devices (PLDs), such as field programmable gate arrays (FPGAs), programmable array logic (PAL) devices, electrically

programmable logic and memory devices and standard cell-based devices, as well as application specific integrated circuits (ASICs). Some other possibilities for implementing aspects of the DOMA and corresponding systems and methods include: microcontrollers with memory (such as electronically erasable programmable read only memory (EEPROM)), embedded microprocessors, firmware, software, etc. Furthermore, aspects of the DOMA and corresponding systems and methods may be embodied in microprocessors having software-based circuit emulation, discrete logic (sequential and combinatorial), custom devices, fuzzy (neural) logic, quantum devices, and hybrids of any of the above device types. Of course the underlying device technologies may be provided in a variety of component types, e.g., metal-oxide semiconductor field-effect transistor (MOSFET) technologies like complementary metal-oxide semiconductor (CMOS), bipolar technologies like emitter-coupled logic (ECL), polymer technologies (e.g., silicon-conjugated polymer and metal-conjugated polymer-metal structures), mixed analog and digital, etc.

It should be noted that any system, method, and/or other components disclosed herein may be described using computer aided design tools and expressed (or represented), as data and/or instructions embodied in various computer-readable media, in terms of their behavioral, register transfer, logic component, transistor, layout geometries, and/or other characteristics. Computer-readable media in which such formatted data and/or instructions may be embodied include, but are not limited to, non-volatile storage media in various forms (e.g., optical, magnetic or semiconductor storage media) and carrier waves that may be used to transfer such formatted data and/or instructions through wireless, optical, or wired signaling media or any combination thereof. Examples of transfers of such formatted data and/or instructions by carrier waves include, but are not limited to, transfers (uploads, downloads, e-mail, etc.) over the Internet and/or other computer networks via one or more data transfer protocols (e.g., HTTP, FTP, SMTP, etc.). When received within a computer system via one or more computer-readable media, such data and/or instruction-based expressions of the above described components may be processed by a processing entity (e.g., one or more

processors) within the computer system in conjunction with execution of one or more other computer programs.

Unless the context clearly requires otherwise, throughout the description and the claims, the words "comprise," "comprising," and the like are to be construed in an inclusive sense as opposed to an exclusive or exhaustive sense; that is to say, in a sense of "including, but not limited to." Words using the singular or plural number also include the plural or singular number respectively. Additionally, the words "herein," "hereunder," "above," "below," and words of similar import, when used in this application, refer to this application as a whole and not to any particular portions of this application. When the word "or" is used in reference to a list of two or more items, that word covers all of the following interpretations of the word: any of the items in the list, all of the items in the list and any combination of the items in the list.

The above description of embodiments of the DOMA and corresponding systems and methods is not intended to be exhaustive or to limit the systems and methods to the precise forms disclosed. While specific embodiments of, and examples for, the DOMA and corresponding systems and methods are described herein for illustrative purposes, various equivalent modifications are possible within the scope of the systems and methods, as those skilled in the relevant art will recognize. The teachings of the DOMA and corresponding systems and methods provided herein can be applied to other systems and methods, not only for the systems and methods described above.

The elements and acts of the various embodiments described above can be combined to provide further embodiments. These and other changes can be made to the DOMA and corresponding systems and methods in light of the above detailed description.

In general, in the following claims, the terms used should not be construed to limit the DOMA and corresponding systems and methods to the specific embodiments disclosed in the specification and the claims, but should be construed to include all systems that operate under the claims. Accordingly, the DOMA and corresponding systems and methods is not limited by the disclosure, but instead the scope is to be determined entirely by the claims.

While certain aspects of the DOMA and corresponding systems and methods are presented below in certain claim forms, the inventors contemplate the various aspects of the DOMA and corresponding systems and methods in any number of claim forms. Accordingly, the inventors reserve the right to add additional claims after filing the application to pursue such additional claim forms for other aspects of the DOMA and corresponding systems and methods.

CLAIMS

What is claimed is:

1. A microphone array comprising:

a first virtual microphone comprising a first combination of a first microphone signal and a second microphone signal, wherein the first microphone signal is generated by a first physical microphone and the second microphone signal is generated by a second physical microphone; and

a second virtual microphone comprising a second combination of the first microphone signal and the second microphone signal, wherein the second combination is different from the first combination, wherein the first virtual microphone and the second virtual microphone are distinct virtual directional microphones with substantially similar responses to noise and substantially dissimilar responses to speech.

2. The microphone array of claim 1, wherein the first and second physical microphones are omnidirectional

3. The microphone array of claim 1, wherein the first virtual microphone has a first linear response to speech that is devoid of a null, wherein the speech is human speech.

4. The microphone array of claim 3, wherein the second virtual microphone has a second linear response to speech that includes a single null oriented in a direction toward a source of the speech.

5. The microphone array of claim 4, wherein the single null is a region of the second linear response having a measured response level that is lower than the measured response level of any other region of the second linear response.

6. The microphone array of claim 4, wherein the second linear response includes a primary lobe oriented in a direction away from the source of the speech.

7. The microphone array of claim 6, wherein the primary lobe is a region of the second linear response having a measured response level that is greater than the measured response level of any other region of the second linear response.

8. The microphone array of claim 4, wherein the first physical microphone and the second physical microphone are positioned along an axis and separated by a first distance.

9. The microphone array of claim 8, wherein a midpoint of the axis is a second distance from a speech source that generates the speech, wherein the speech source is located in a direction defined by an angle relative to the midpoint.

10. The microphone array of claim 9, wherein the first virtual microphone comprises the second microphone signal subtracted from the first microphone signal.

11. The microphone array of claim 10, wherein the first microphone signal is delayed.

12. The microphone array of claim 11, wherein the delay is raised to a power that is proportional to a time difference between arrival of the speech at the first virtual microphone and arrival of the speech at the second virtual microphone.

13. The microphone array of claim 11, wherein the delay is raised to a power that is proportional to a sampling frequency multiplied by a quantity equal to a third distance subtracted from a fourth distance, the third distance being between the first physical microphone and the speech source and the fourth distance being between the second physical microphone and the speech source.

14. The microphone array of claim 10, wherein the second microphone signal is multiplied by a ratio, wherein the ratio is a ratio of a third distance to a fourth distance, the third distance being between the first physical microphone and the

speech source and the fourth distance being between the second physical microphone and the speech source.

15. The microphone array of claim 9, wherein the second virtual microphone comprises the first microphone signal subtracted from the second microphone signal.

16. The microphone array of claim 15, wherein the first microphone signal is delayed.

17. The microphone array of claim 16, wherein the delay is raised to a power that is proportional to a time difference between arrival of the speech at the first virtual microphone and arrival of the speech at the second virtual microphone.

18. The microphone array of claim 16, wherein the power is proportional to a sampling frequency multiplied by a quantity equal to a third distance subtracted from a fourth distance, the third distance being between the first physical microphone and the speech source and the fourth distance being between the second physical microphone and the speech source.

19. The microphone array of claim 18, wherein the first microphone signal is multiplied by a ratio, wherein the ratio is a ratio of the third distance to the fourth distance.

20. The microphone array of claim 4, wherein the single null is located at a distance from at least one of the first physical microphone and the second physical microphone where the source of the speech is expected to be.

21. The microphone array of claim 1, wherein the first virtual microphone comprises the second microphone signal subtracted from a delayed version of the first microphone signal.

22. The microphone array of claim 21, wherein the second virtual microphone comprises a delayed version of the first microphone signal subtracted from the second microphone signal.

23. A microphone array comprising:

a first virtual microphone formed from a first combination of a first microphone signal and a second microphone signal, wherein the first microphone signal is generated by a first omnidirectional microphone and the second microphone signal is generated by a second omnidirectional microphone; and

a second virtual microphone formed from a second combination of the first microphone signal and the second microphone signal, wherein the second combination is different from the first combination;

wherein the first virtual microphone has a first linear response to speech that is devoid of a null, wherein the second virtual microphone has a second linear response to speech that has a single null oriented in a direction toward a source of the speech, wherein the speech is human speech.

24. The microphone array of claim 23, wherein the first virtual microphone and the second virtual microphone have a linear response to noise that is substantially similar.

25. The microphone array of claim 23, wherein the single null is a region of the second linear response having a measured response level that is lower than the measured response level of any other region of the second linear response.

26. The microphone array of claim 23, wherein the second linear response includes a primary lobe oriented in a direction away from the source of the speech.

27. The microphone array of claim 26, wherein the primary lobe is a region of the second linear response having a measured response level that is greater than the measured response level of any other region of the second linear response.

28. A device comprising:

a first microphone outputting a first microphone signal and a second microphone outputting a second microphone signal; and

a processing component coupled to the first microphone signal and the second microphone signal, the processing component generating a virtual microphone array comprising a first virtual microphone and a second virtual microphone, wherein the first virtual microphone comprises a first combination of the first microphone signal and the second microphone signal, wherein the second virtual microphone comprises a second combination of the first microphone signal and the second microphone signal, wherein the second combination is different from the first combination, wherein the first virtual microphone and the second virtual microphone have substantially similar responses to noise and substantially dissimilar responses to speech.

29. A device comprising:

a first microphone outputting a first microphone signal and a second microphone outputting a second microphone signal, wherein the first microphone and the second microphone are omnidirectional microphones; and

a virtual microphone array comprising a first virtual microphone and a second virtual microphone, wherein the first virtual microphone comprises a first combination of the first microphone signal and the second microphone signal, wherein the second virtual microphone comprises a second combination of the first microphone signal and the second microphone signal, wherein the second combination is different from the first combination, wherein the first virtual microphone and the second virtual microphone are distinct virtual directional microphones.

30. A device comprising:

a first physical microphone generating a first microphone signal;

a second physical microphone generating a second microphone signal; and

a processing component coupled to the first microphone signal and the second microphone signal, the processing component generating a virtual

microphone array comprising a first virtual microphone and a second virtual microphone;

wherein the first virtual microphone comprises the second microphone signal subtracted from a delayed version of the first microphone signal;

wherein the second virtual microphone comprises a delayed version of the first microphone signal subtracted from the second microphone signal.

31. The device of claim 30, wherein the first virtual microphone has a first linear response to speech that is devoid of a null, wherein the speech is human speech.

32. The device of claim 31, wherein the second virtual microphone has a second linear response to speech that includes a single null oriented in a direction toward a source of the speech.

33. The device of claim 32, wherein the single null is a region of the second linear response having a measured response level that is lower than the measured response level of any other region of the second linear response.

34. The device of claim 32, wherein the second linear response includes a primary lobe oriented in a direction away from the source of the speech.

35. The device of claim 34, wherein the primary lobe is a region of the second linear response having a measured response level that is greater than the measured response level of any other region of the second linear response.

36. The device of claim 32, wherein the first physical microphone and the second physical microphone are positioned along an axis and separated by a first distance.

37. The device of claim 36, wherein a midpoint of the axis is a second distance from a speech source that generates the speech, wherein the speech source is located in a direction defined by an angle relative to the midpoint.

38. The device of claim 37, wherein one or more of the first microphone signal and the second microphone signal is delayed.

39. The device of claim 38, wherein the delay is raised to a power that is proportional to a time difference between arrival of the speech at the first virtual microphone and arrival of the speech at the second virtual microphone.

40. The device of claim 39, wherein the power is proportional to a sampling frequency multiplied by a quantity equal to a third distance subtracted from a fourth distance, the third distance being between the first physical microphone and the speech source and the fourth distance being between the second physical microphone and the speech source.

41. The device of claim 37, wherein one or more of the first microphone signal and the second microphone signal is multiplied by a gain factor.

42. A sensor comprising:

a physical microphone array including a first physical microphone and a second physical microphone, the first physical microphone outputting a first microphone signal and the second physical microphone outputting a second microphone signal;

a virtual microphone array comprising a first virtual microphone and a second virtual microphone, the first virtual microphone comprising a first combination of the first microphone signal and the second microphone signal, the second virtual microphone comprising a second combination of the first microphone signal and the second microphone signal, wherein the second combination is different from the first combination;

the virtual microphone array including a single null oriented in a direction toward a source of speech of a human speaker.

43. The sensor of claim 42, wherein the first virtual microphone has a first linear response to speech that is devoid of a null, wherein the second virtual microphone has a second linear response to speech that includes the single null.

44. The sensor of claim 43, wherein the first virtual microphone and the second virtual microphone have a linear response to noise that is substantially similar.

45. The sensor of claim 43, wherein the single null is a region of the second linear response to speech having a measured response level that is lower than the measured response level of any other region of the second linear response.

46. The sensor of claim 43, wherein the second linear response to speech includes a primary lobe oriented in a direction away from the source of the speech.

47. The sensor of claim 46, wherein the primary lobe is a region of the second linear response having a measured response level that is greater than the measured response level of any other region of the second linear response.

48. The sensor of claim 42, wherein the single null is located at a distance from the physical microphone array where the source of the speech is expected to be.

ABSTRACT

A dual omnidirectional microphone array noise suppression is described. Compared to conventional arrays and algorithms, which seek to reduce noise by nulling out noise sources, the array of an embodiment is used to form two distinct virtual directional microphones which are configured to have very similar noise responses and very dissimilar speech responses. The only null formed is one used to remove the speech of the user from V_2. The two virtual microphones may be paired with an adaptive filter algorithm and VAD algorithm to significantly reduce the noise without distorting the speech, significantly improving the SNR of the desired speech over conventional noise suppression systems.

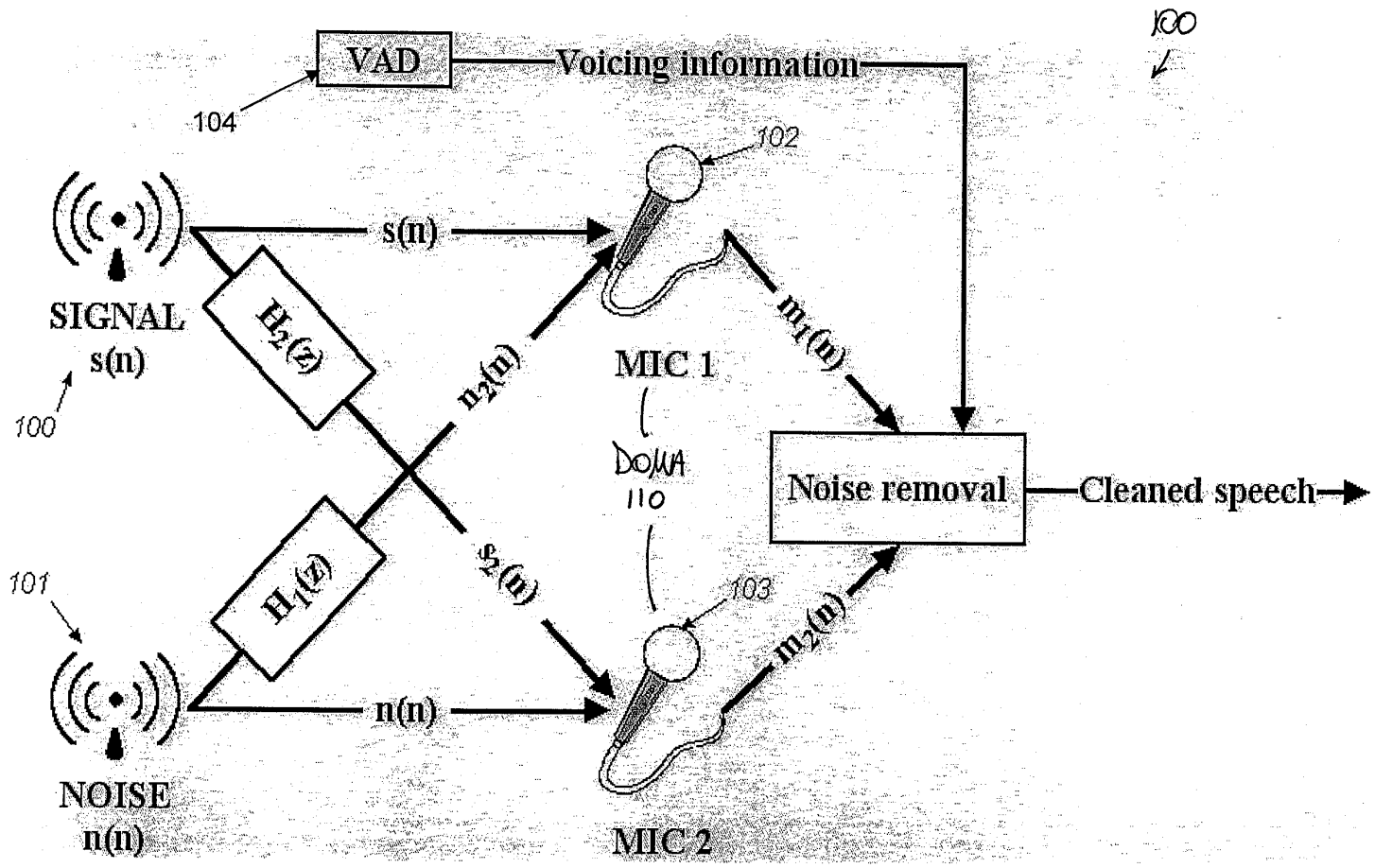
100
VAD
Voicing information
104
102
s(n)
SIGNAL
s(n)
100
$H_2(z)$
$n_2(n)$
MIC 1
$m_1(n)$
DOMA
110
Noise removal
Cleaned speech
101
$H_1(z)$
$s_2(n)$
103
$m_2(n)$
n(n)
NOISE
n(n)
MIC 2

FIGURE 1

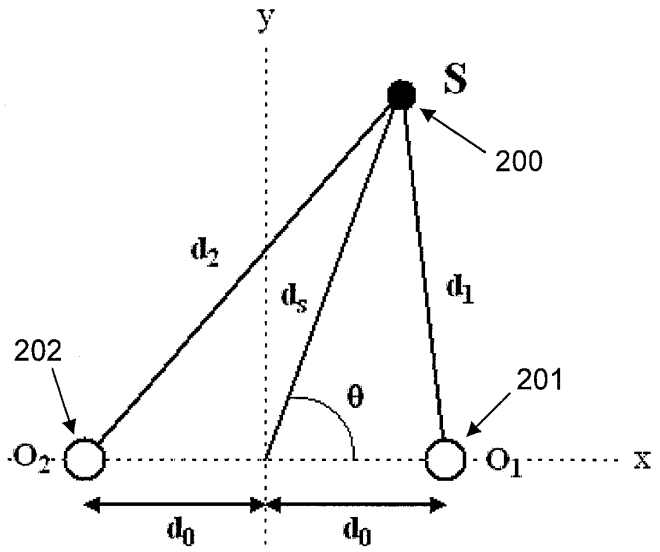

FIGURE 2

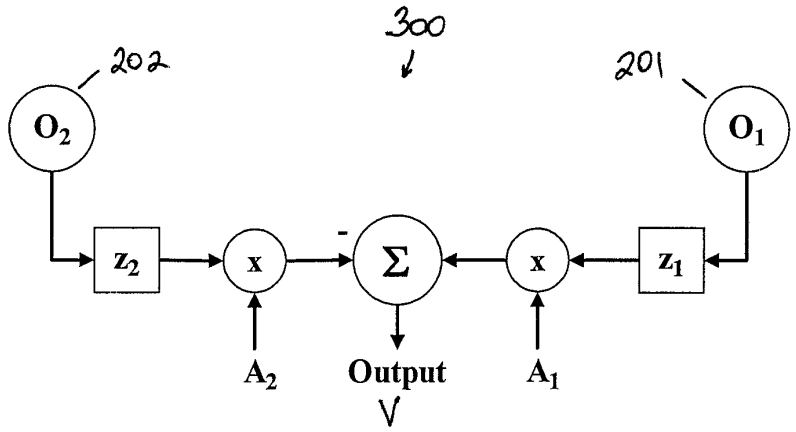

FIGURE 3

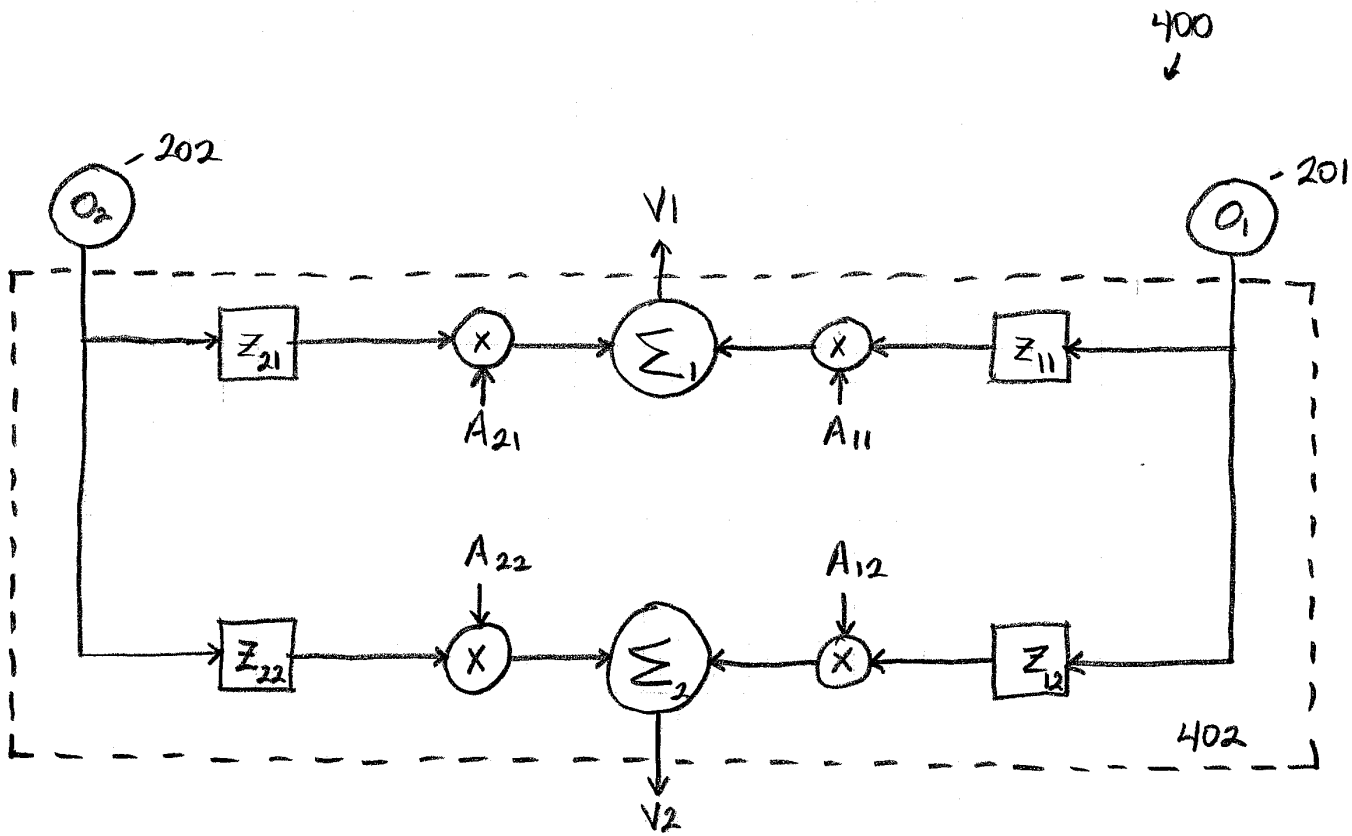
400
202
201
O_2
O_1
V1
Z_{21}
Z_{11}
Σ_1
A_{21}
A_{11}
A_{22}
A_{12}
Z_{22}
Z_{12}
Σ_2
402
V2

FIGURE 4

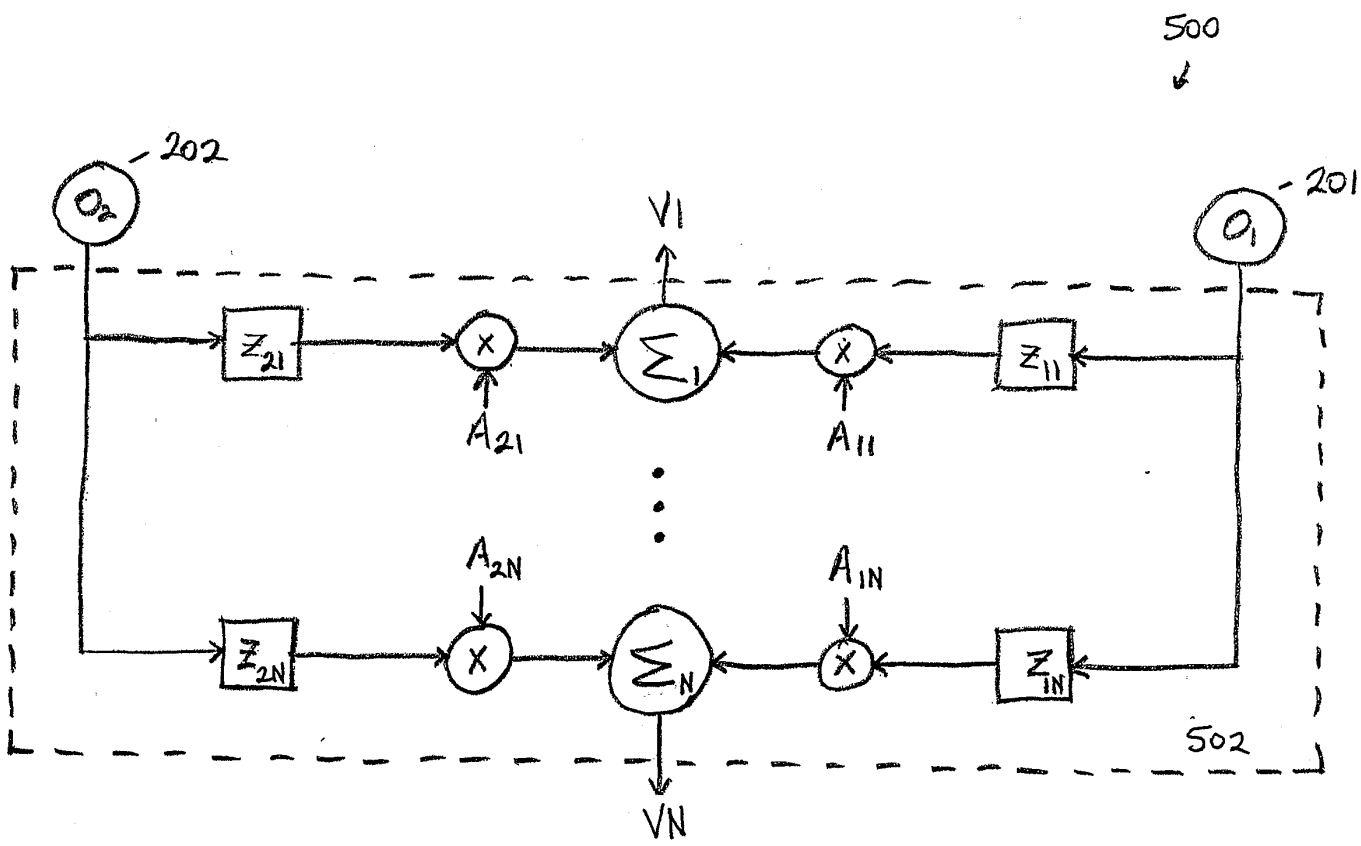
500
202
201
O_2
O_1
V1
Z_{21}
Z_{11}
A_{21}
A_{11}
A_{2N}
A_{1N}
Z_{2N}
Z_{1N}
Σ_1
Σ_N
502
VN

FIGURE 5

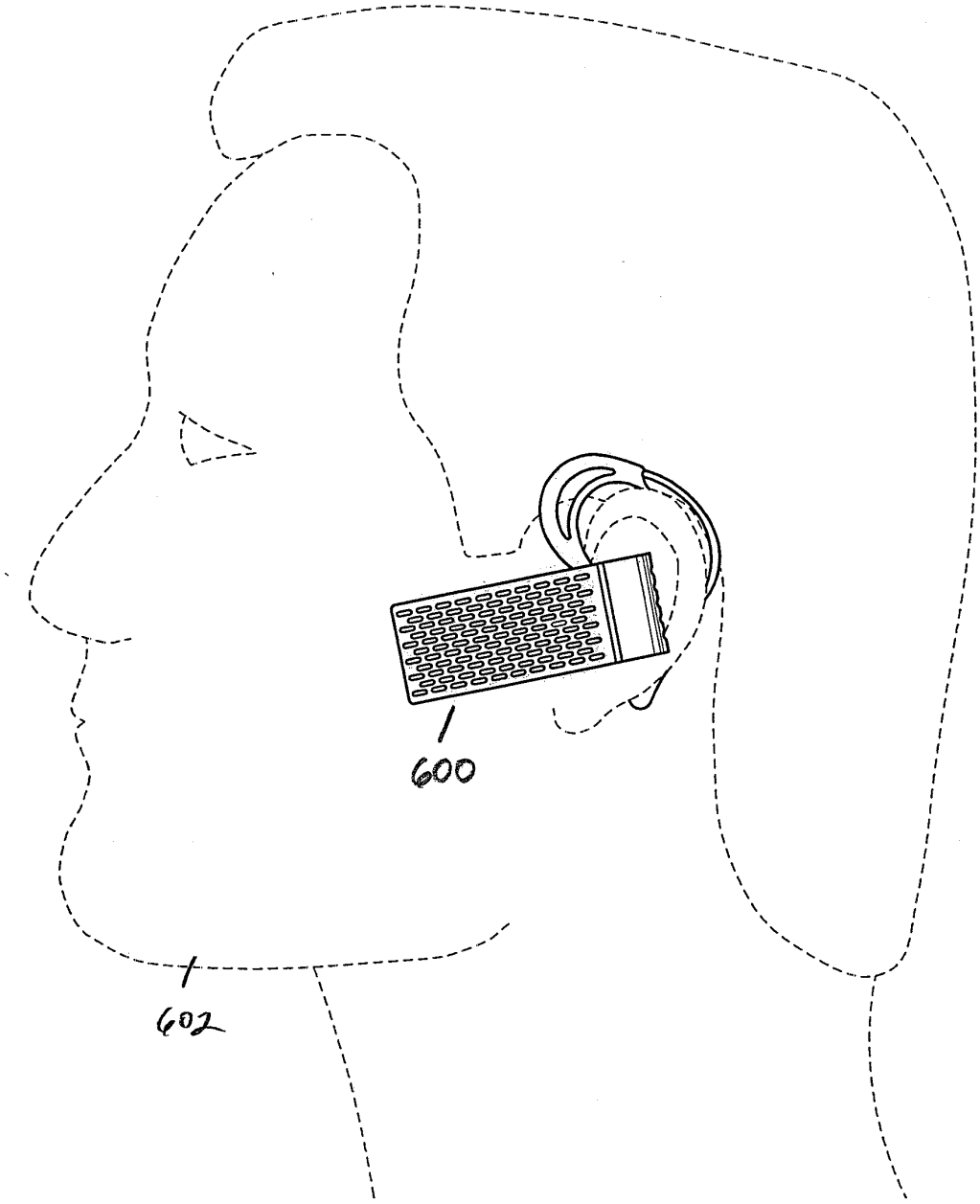

FIGURE 6

700

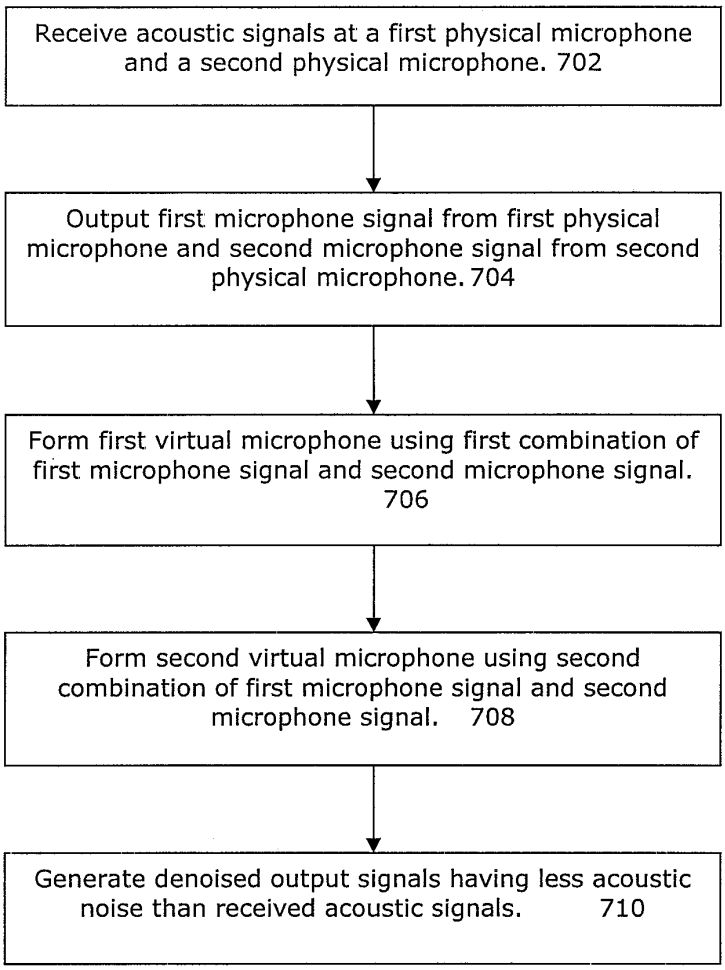
Receive acoustic signals at a first physical microphone and a second physical microphone. 702
Output first microphone signal from first physical microphone and second microphone signal from second physical microphone. 704
Form first virtual microphone using first combination of first microphone signal and second microphone signal. 706
Form second virtual microphone using second combination of first microphone signal and second microphone signal. 708
Generate denoised output signals having less acoustic noise than received acoustic signals. 710

Figure 7

800

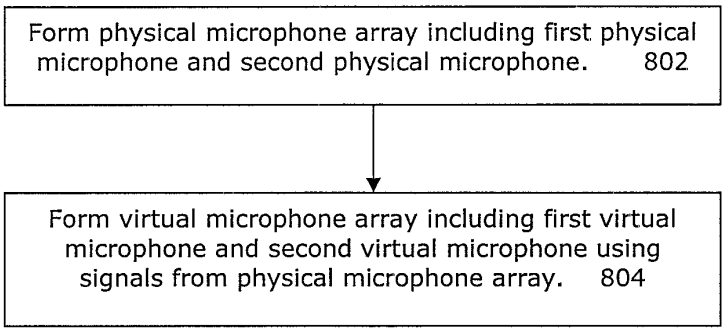
Form physical microphone array including first physical microphone and second physical microphone. 802
Form virtual microphone array including first virtual microphone and second virtual microphone using signals from physical microphone array. 804

Figure 8

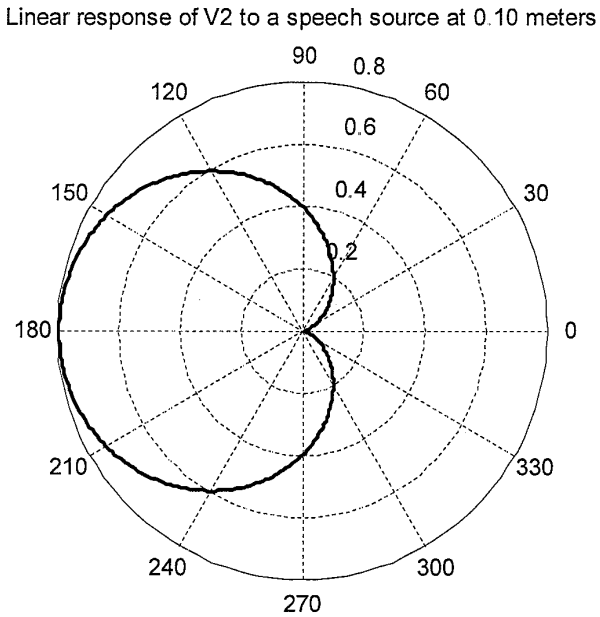

Figure 9

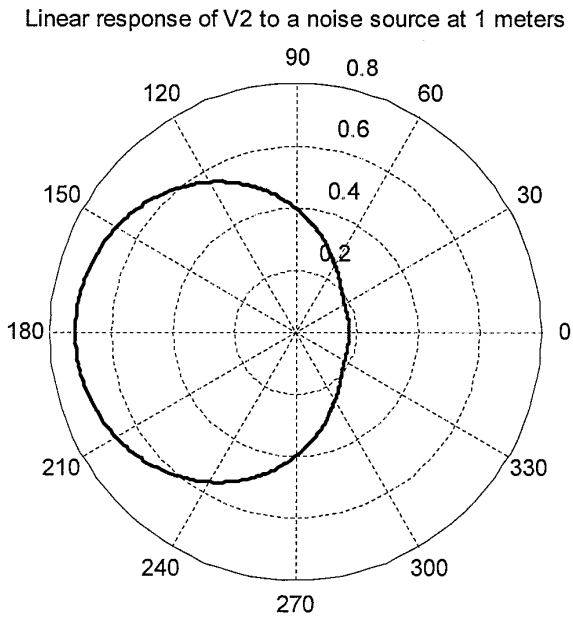

Figure 10

Linear response of V1 to a speech source at 0.10 meters

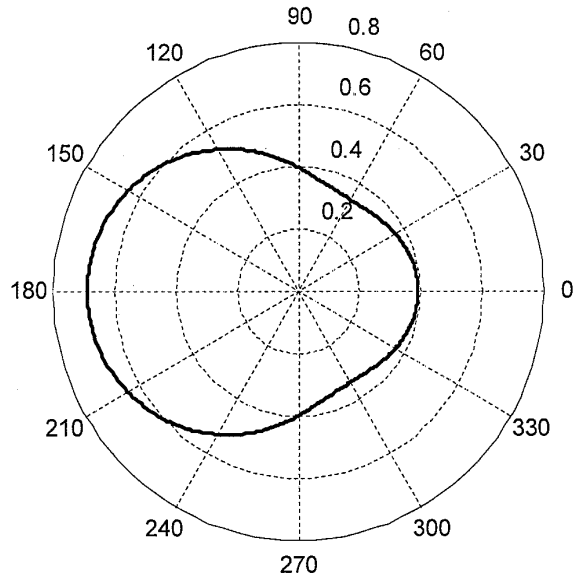

FIGURE 11

Linear response of V1 to a noise source at 1 meters

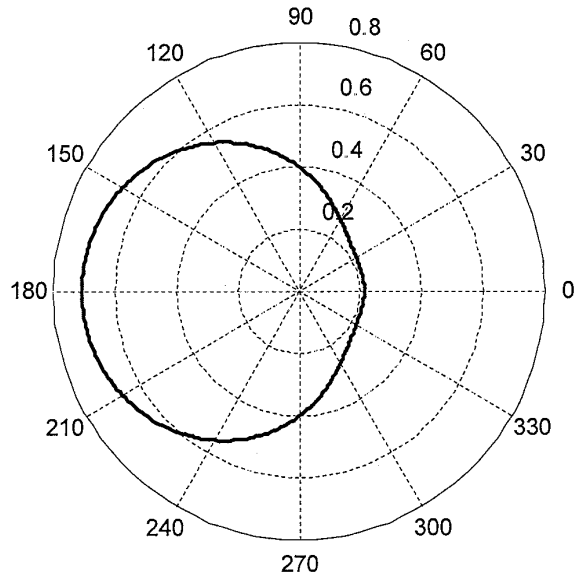

FIGURE 12

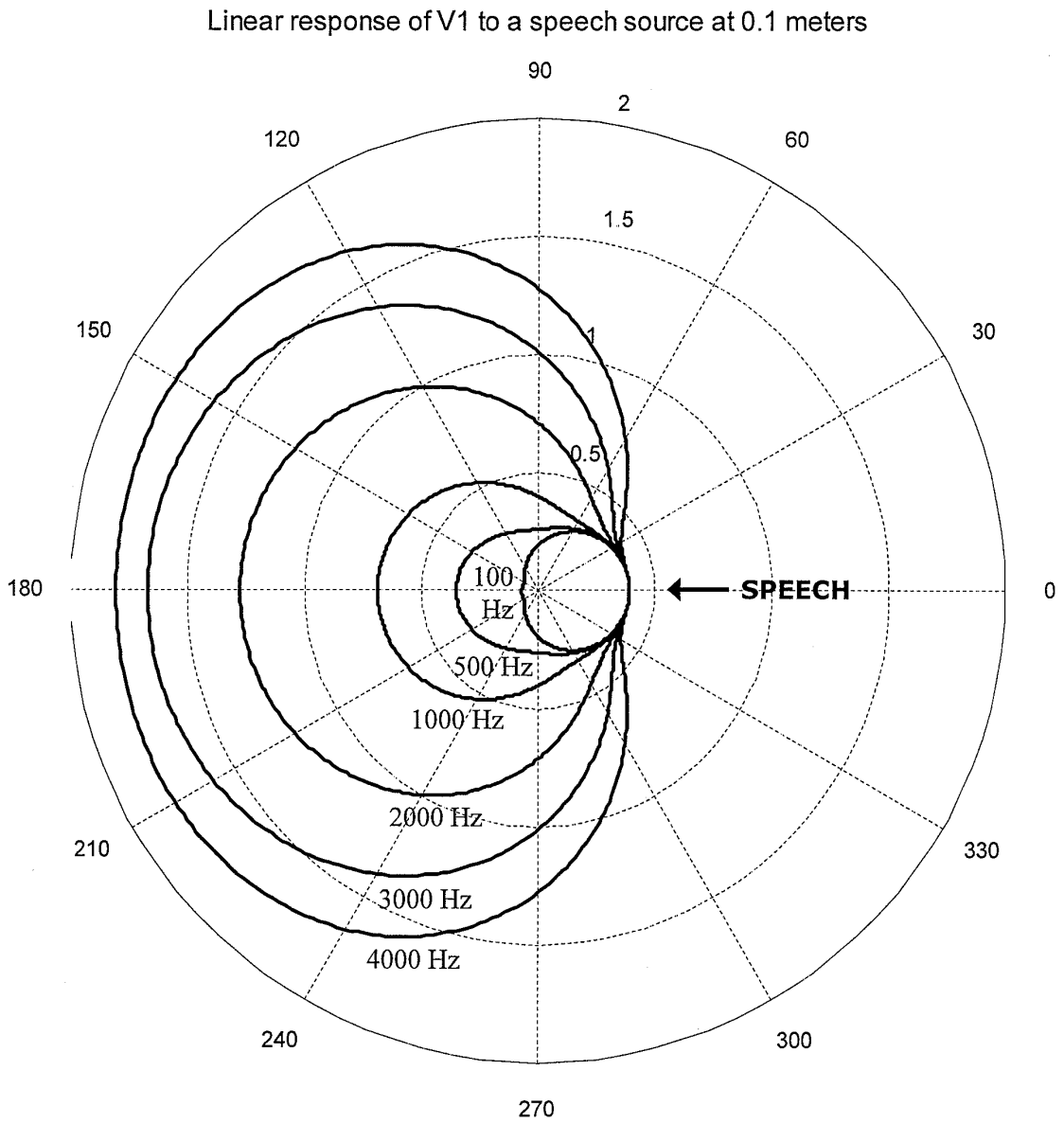
Linear response of V1 to a speech source at 0.1 meters
90
2
120
60
1.5
150
30
1
0.5
180
0
100 Hz
SPEECH
500 Hz
1000 Hz
2000 Hz
210
330
3000 Hz
4000 Hz
240
300
270

FIGURE 13

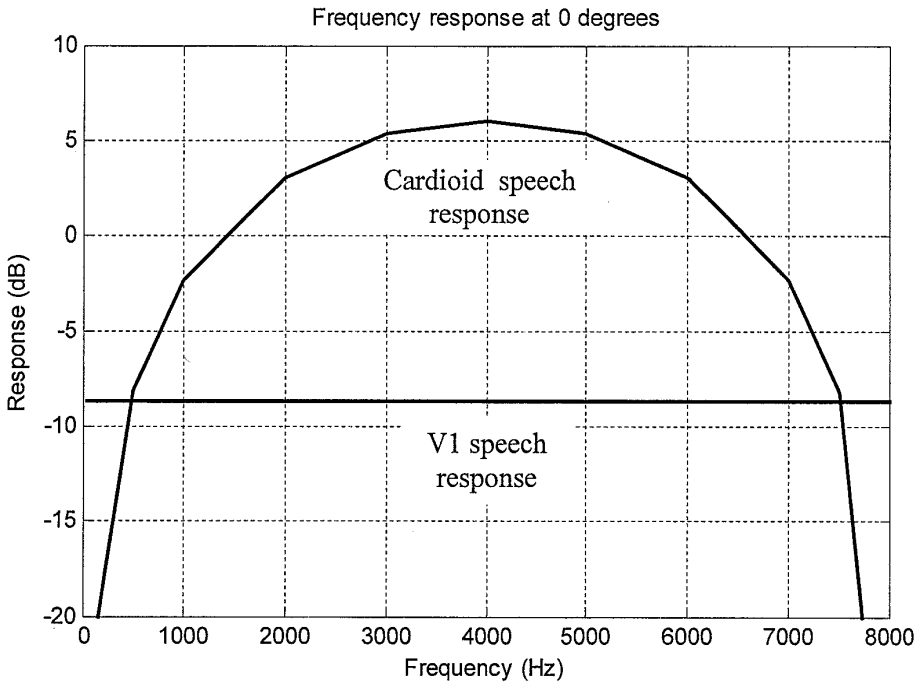
Frequency response at 0 degrees
10
5
0
-5
-10
-15
-20
Response (dB)
Cardioid speech
response
V1 speech
response
0
1000
2000
3000
4000
5000
6000
7000
8000
Frequency (Hz)

FIGURE 14

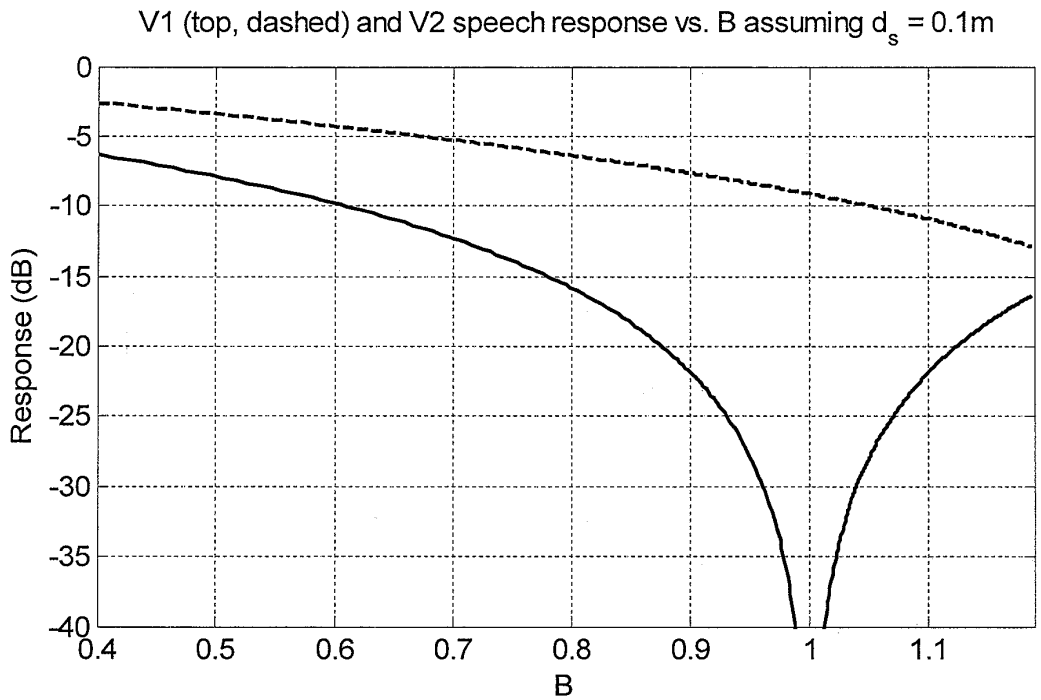

FIGURE 15

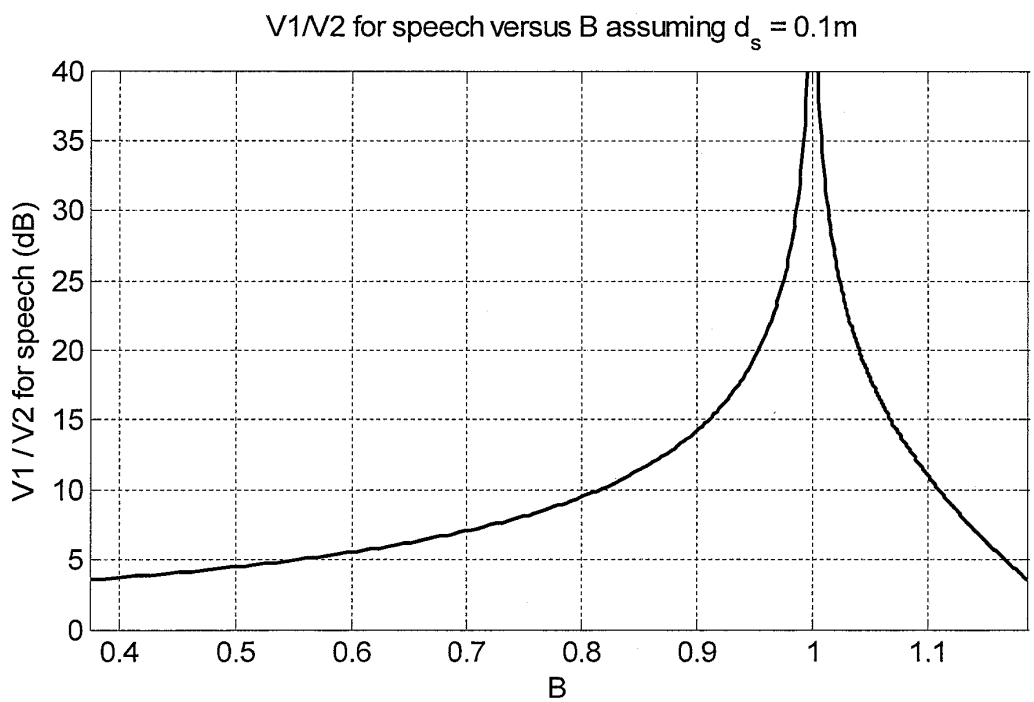

FIGURE 16

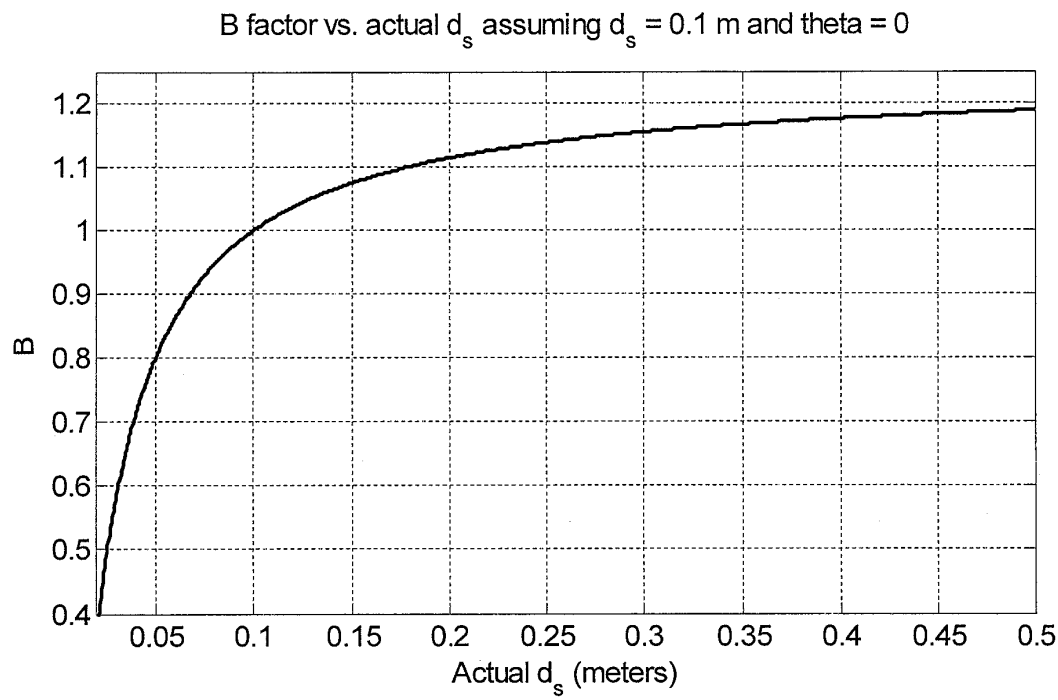

FIGURE 17

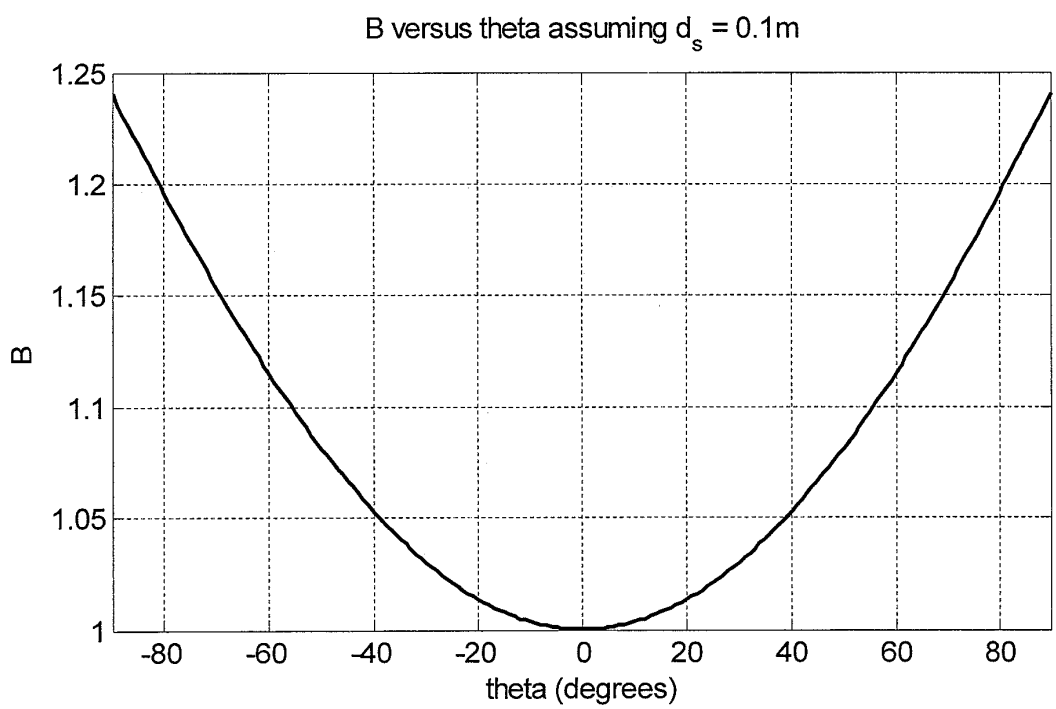

FIGURE 18

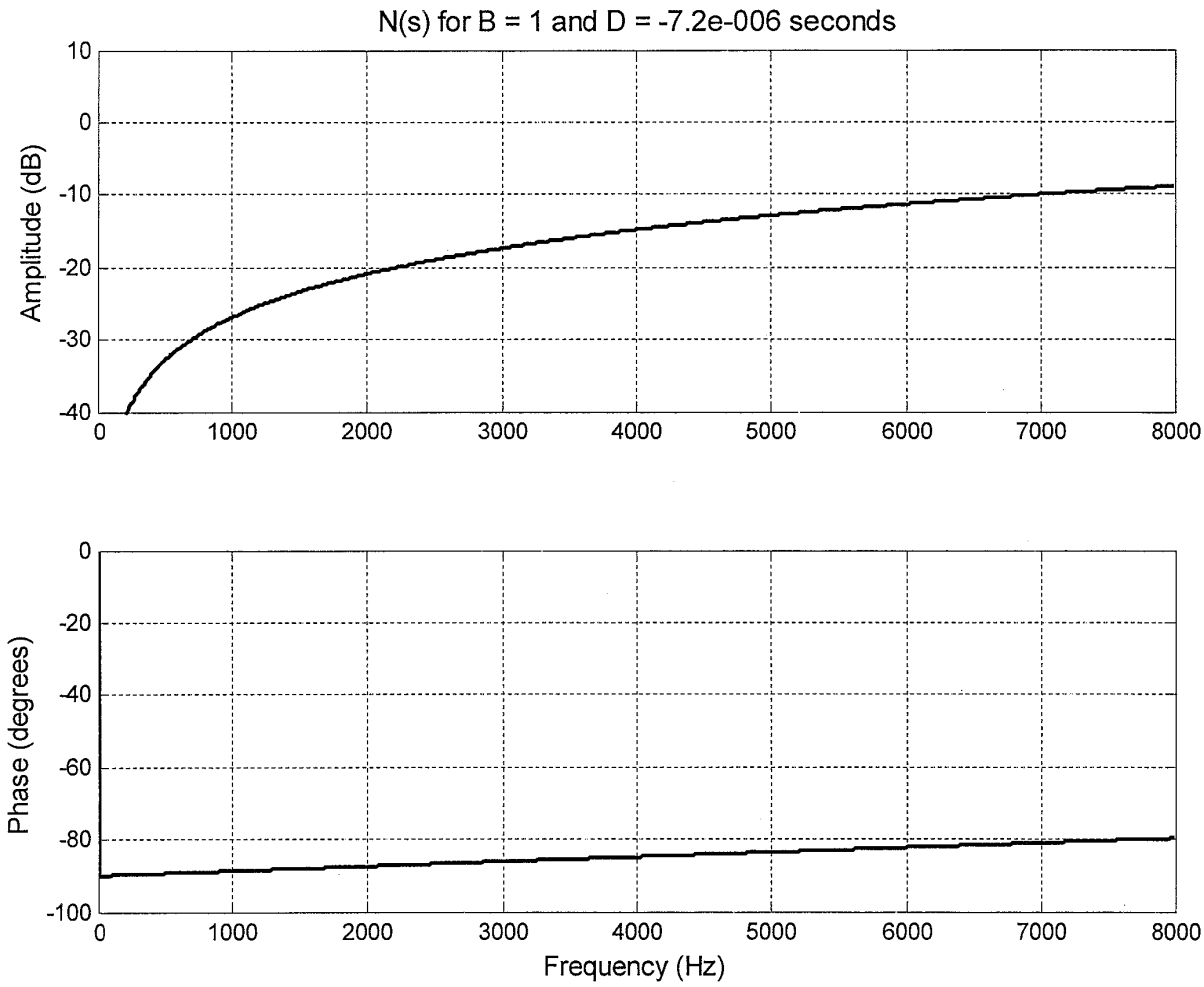
N(s) for B = 1 and D = -7.2e-006 seconds
Amplitude (dB)
10
0
-10
-20
-30
-40
0
1000
2000
3000
4000
5000
6000
7000
8000
Phase (degrees)
0
-20
-40
-60
-80
-100
Frequency (Hz)

FIGURE 19

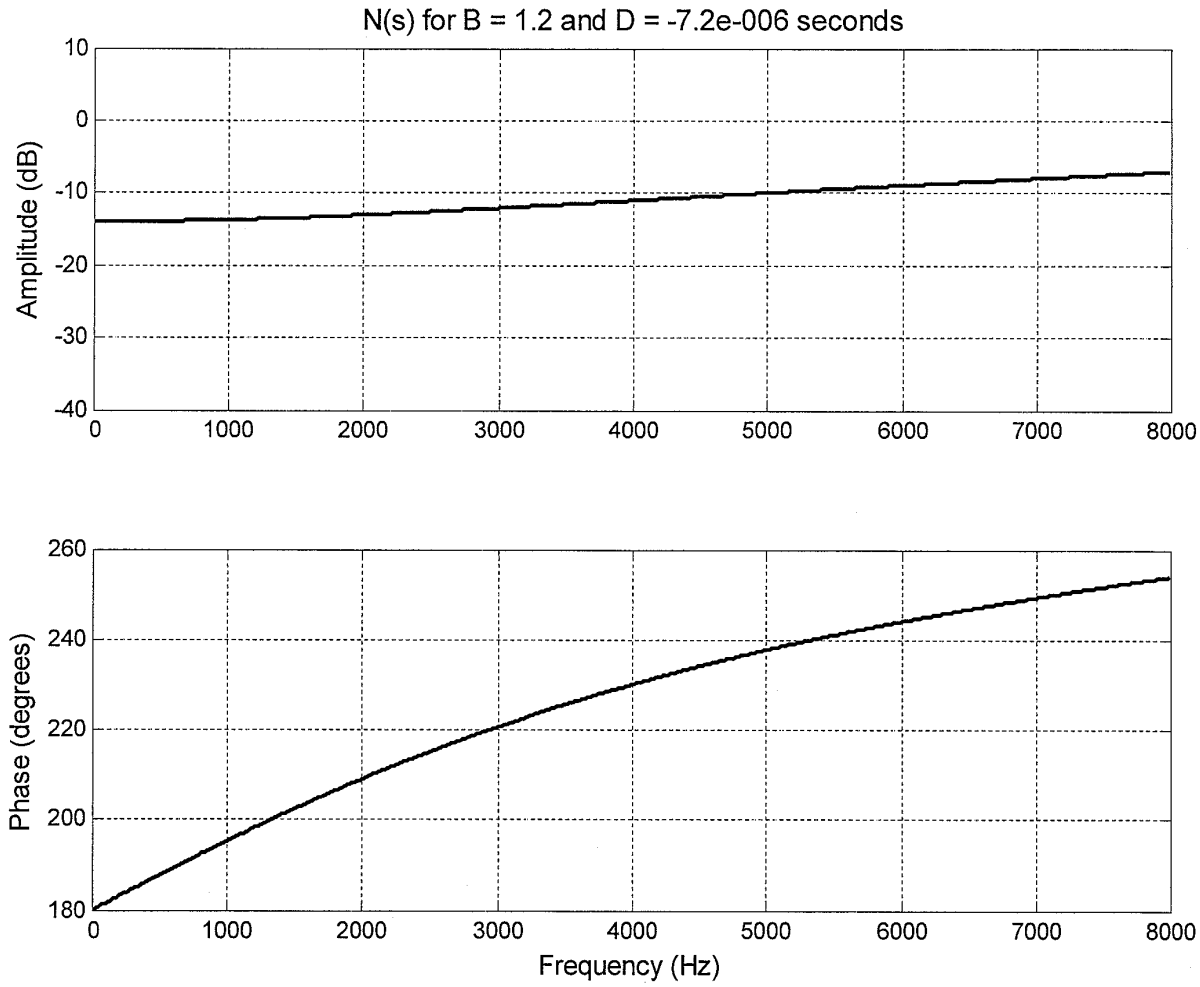
N(s) for B = 1.2 and D = -7.2e-006 seconds
Amplitude (dB)
10
0
-10
-20
-30
-40
0
1000
2000
3000
4000
5000
6000
7000
8000
Phase (degrees)
260
240
220
200
180
Frequency (Hz)

FIGURE 20

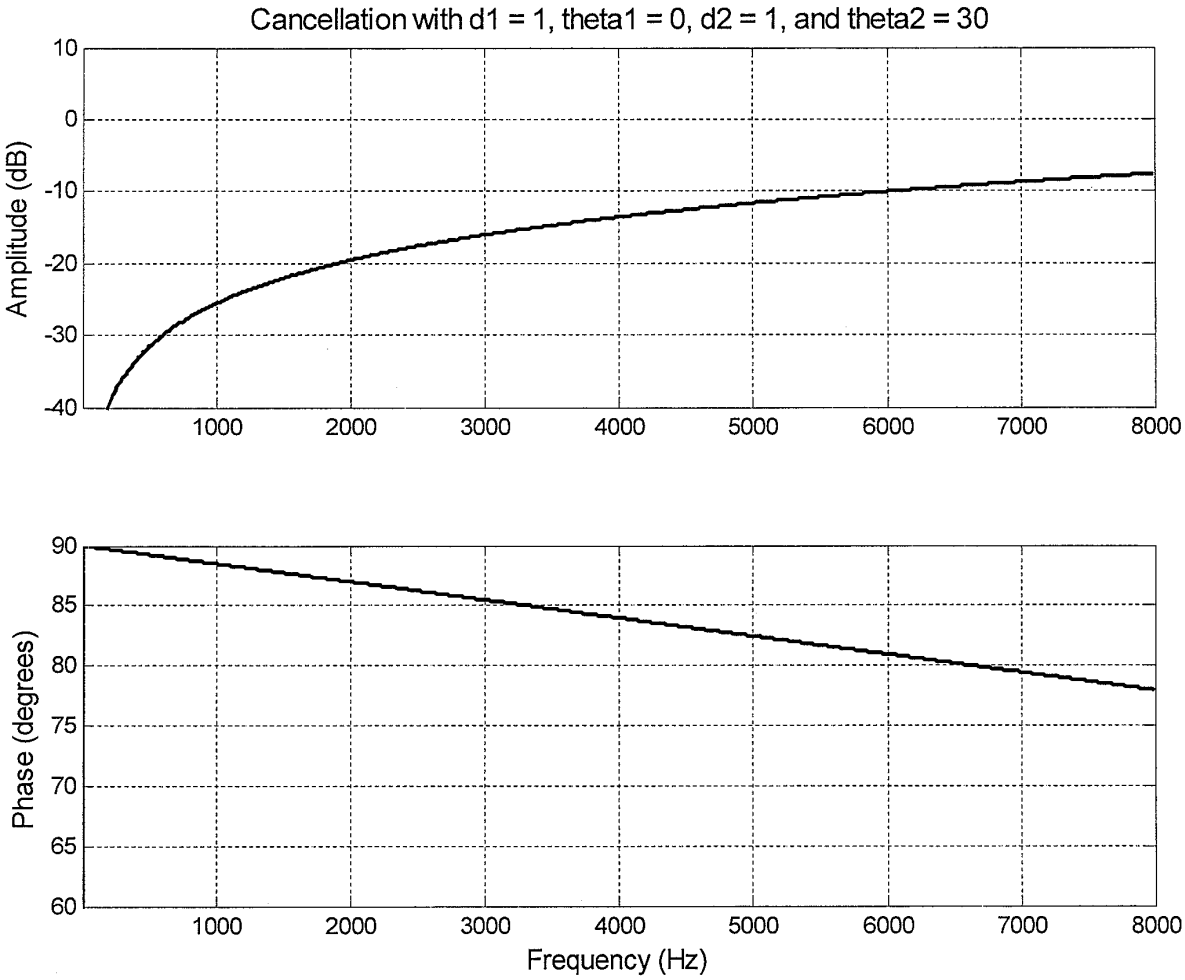
Cancellation with d1 = 1, theta1 = 0, d2 = 1, and theta2 = 30
Amplitude (dB)
10
0
-10
-20
-30
-40
1000
2000
3000
4000
5000
6000
7000
8000
Phase (degrees)
90
85
80
75
70
65
60
1000
2000
3000
4000
5000
6000
7000
8000
Frequency (Hz)

FIGURE 21

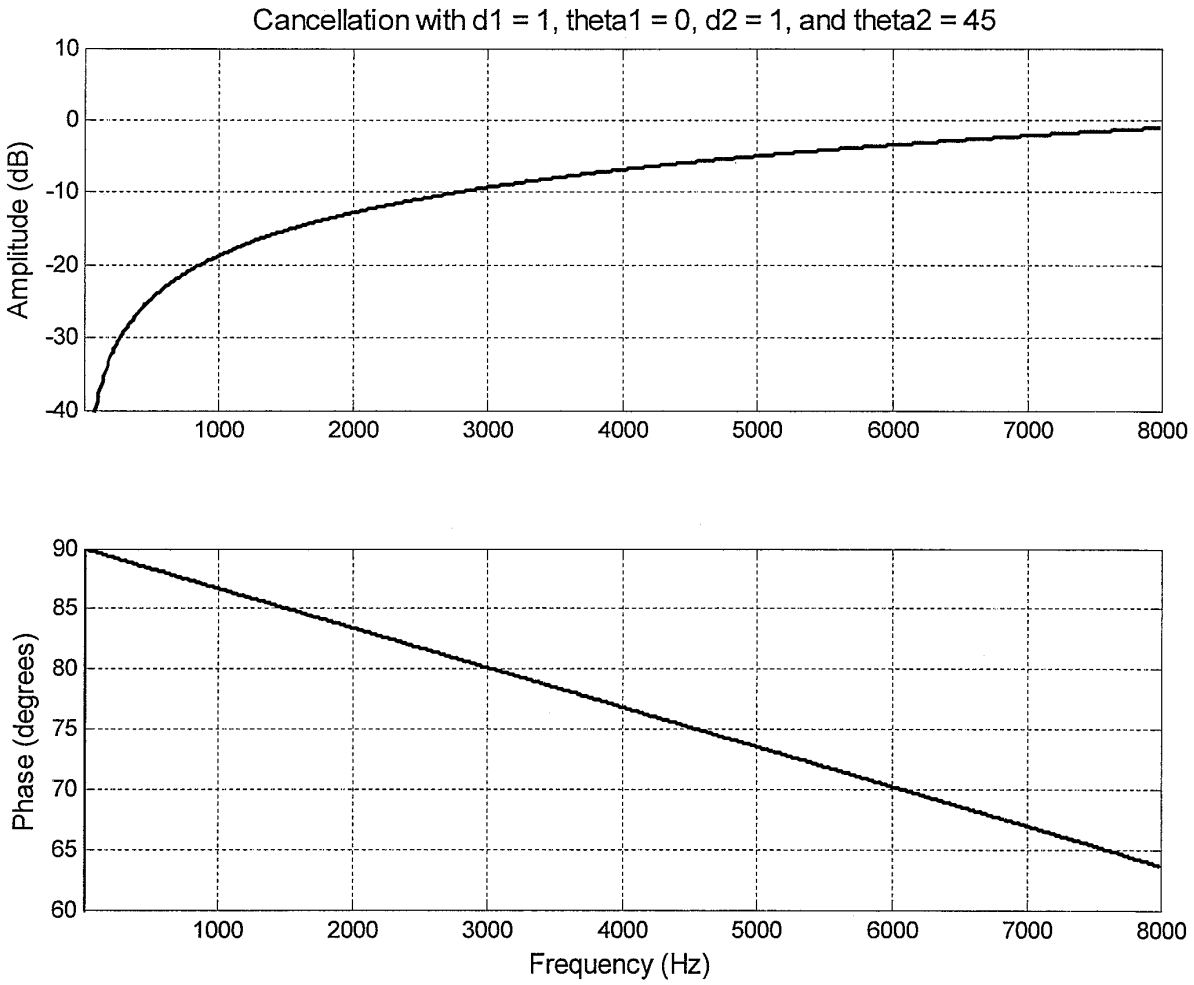
Cancellation with d1 = 1, theta1 = 0, d2 = 1, and theta2 = 45
Amplitude (dB)
10
0
-10
-20
-30
-40
1000
2000
3000
4000
5000
6000
7000
8000
Phase (degrees)
90
85
80
75
70
65
60
Frequency (Hz)

FIGURE 22

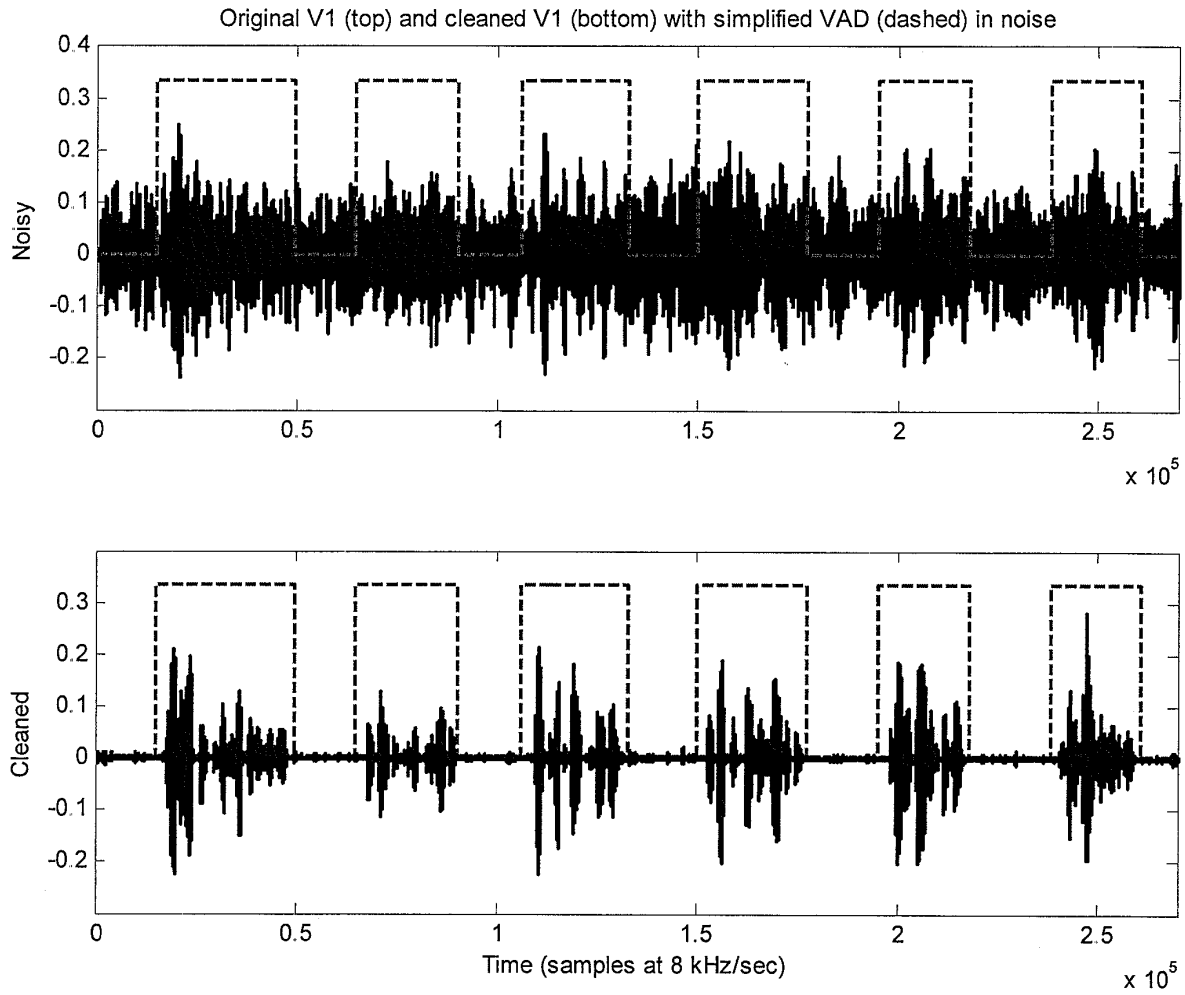
Original V1 (top) and cleaned V1 (bottom) with simplified VAD (dashed) in noise
Noisy
0.4
0.3
0.2
0.1
0
-0.1
-0.2
0
0.5
1
1.5
2
2.5
x 10^5
Cleaned
0.3
0.2
0.1
0
-0.1
-0.2
0
0.5
1
1.5
2
2.5
Time (samples at 8 kHz/sec)
x 10^5

FIGURE 23

Electronic Patent Application Fee Transmittal

Application Number:	
Filing Date:	
Title of Invention:	Dual Omnidirectional Microphone Array (DOMA)
First Named Inventor/Applicant Name:	Gregory C. Burnett
Filer:	Richard L. Gregory/Jerry Donnard
Attorney Docket Number:	ALPH.P035

Filed as Large Entity

Utility Filing Fees

Description	Fee Code	Quantity	Amount	Sub-Total in USD($)
Basic Filing:				
Utility application filing	1011	1	310	310
Utility Search Fee	1111	1	510	510
Utility Examination Fee	1311	1	210	210
Pages:				
Claims:				
Claims in excess of 20	1202	28	50	1400
Independent claims in excess of 3	1201	3	210	630
Miscellaneous-Filing:				

Description	Fee Code	Quantity	Amount	Sub-Total in USD($)
Petition:				
Patent-Appeals-and-Interference:				
Post-Allowance-and-Post-Issuance:				
Extension-of-Time:				
Miscellaneous:				
			Total in USD ($)	**3060**

Electronic Acknowledgement Receipt

EFS ID:	3457085
Application Number:	12139333
International Application Number:	
Confirmation Number:	1204
Title of Invention:	Dual Omnidirectional Microphone Array (DOMA)
First Named Inventor/Applicant Name:	Gregory C. Burnett
Customer Number:	53186
Filer:	Richard L. Gregory/Jerry Donnard
Filer Authorized By:	Richard L. Gregory
Attorney Docket Number:	ALPH.P035
Receipt Date:	13-JUN-2008
Filing Date:	
Time Stamp:	18:57:40
Application Type:	Utility under 35 USC 111(a)

Payment information:

Submitted with Payment	yes
Payment Type	Credit Card
Payment was successfully received in RAM	$3060
RAM confirmation Number	3519
Deposit Account	
Authorized User	

File Listing:

Document Number	Document Description	File Name	File Size(Bytes) /Message Digest	Multi Part /.zip	Pages (if appl.)

1	Application Data Sheet	ADS_ALPHP035.pdf	1902734 9a44de7bb96177bc7856bfbd8df695ebb370c464	no	4
Warnings:					
Information:					
2		Patent_Application_ALPHP035.pdf	7437185 6f38d2afb68d4d1b2bd07c7bd25d7cef0ae3a60c	yes	80

Multipart Description/PDF files in .zip description

Document Description	Start	End
Transmittal of New Application	1	1
Specification	2	53
Claims	54	61
Abstract	62	62
Drawings-only black and white line drawings	63	80

Warnings:					
Information:					
3	Fee Worksheet (PTO-06)	fee-info.pdf	8549 1ea8136700d4b6e115e7916af6ffd5cfb92c9969	no	2
Warnings:					
Information:					
		Total Files Size (in bytes):	9348468		

This Acknowledgement Receipt evidences receipt on the noted date by the USPTO of the indicated documents, characterized by the applicant, and including page counts, where applicable. It serves as evidence of receipt similar to a Post Card, as described in MPEP 503.

New Applications Under 35 U.S.C. 111
If a new application is being filed and the application includes the necessary components for a filing date (see 37 CFR 1.53(b)-(d) and MPEP 506), a Filing Receipt (37 CFR 1.54) will be issued in due course and the date shown on this Acknowledgement Receipt will establish the filing date of the application.

National Stage of an International Application under 35 U.S.C. 371
If a timely submission to enter the national stage of an international application is compliant with the conditions of 35 U.S.C. 371 and other applicable requirements a Form PCT/DO/EO/903 indicating acceptance of the application as a national stage submission under 35 U.S.C. 371 will be issued in addition to the Filing Receipt, in due course.

New International Application Filed with the USPTO as a Receiving Office
If a new international application is being filed and the international application includes the necessary components for an international filing date (see PCT Article 11 and MPEP 1810), a Notification of the International Application Number and of the International Filing Date (Form PCT/RO/105) will be issued in due course, subject to prescriptions concerning national security, and the date shown on this Acknowledgement Receipt will establish the international filing date of the application.

PTO/SB/14 (07-07)
Approved for use through 06/30/2010. OMB 0651-0032
U.S. Patent and Trademark Office; U.S. DEPARTMENT OF COMMERCE
Under the Paperwork Reduction Act of 1995, no persons are required to respond to a collection of information unless it contains a valid OMB control number.

Application Data Sheet 37 CFR 1.76	Attorney Docket Number	ALPH.P035
	Application Number	
Title of Invention	Dual Omnidirectional Microphone Array (DOMA)	

The application data sheet is part of the provisional or nonprovisional application for which it is being submitted. The following form contains the bibliographic data arranged in a format specified by the United States Patent and Trademark Office as outlined in 37 CFR 1.76.
This document may be completed electronically and submitted to the Office in electronic format using the Electronic Filing System (EFS) or the document may be printed and included in a paper filed application.

Secrecy Order 37 CFR 5.2

☐ Portions or all of the application associated with this Application Data Sheet may fall under a Secrecy Order pursuant to 37 CFR 5.2 (Paper filers only. Applications that fall under Secrecy Order may not be filed electronically.)

Applicant Information:

Applicant 1 Remove

Applicant Authority ◉ Inventor ◯ Legal Representative under 35 U.S.C. 117 ◯ Party of Interest under 35 U.S.C. 118

Prefix	Given Name	Middle Name	Family Name	Suffix
	Gregory	C.	Burnett	

Residence Information (Select One) ◉ US Residency ◯ Non US Residency ◯ Active US Military Service

City	Dodge Center	State/Province	MN	Country of Residence i	US

Citizenship under 37 CFR 1.41(b) i US

Mailing Address of Applicant:

Address 1	150 Executive Park Blvd., Suite 4550		
Address 2			
City	San Francisco	**State/Province**	CA
Postal Code	94134	**Country**i	US

All Inventors Must Be Listed - Additional Inventor Information blocks may be generated within this form by selecting the **Add** button. Add

Correspondence Information:

Enter either Customer Number or complete the Correspondence Information section below.
For further information see 37 CFR 1.33(a).

☐ **An Address is being provided for the correspondence Information of this application.**

Customer Number	53186	
Email Address	rgregory@csgip.com	Add Email Remove Email

Application Information:

Title of the Invention	Dual Omnidirectional Microphone Array (DOMA)		
Attorney Docket Number	ALPH.P035	**Small Entity Status Claimed**	☐
Application Type	Nonprovisional		
Subject Matter	Utility		
Suggested Class (if any)		**Sub Class (if any)**	
Suggested Technology Center (if any)			
Total Number of Drawing Sheets (if any)	18	**Suggested Figure for Publication (if any)**	

Under the Paperwork Reduction Act of 1995, no persons are required to respond to a collection of information unless it contains a valid OMB control number.

Application Data Sheet 37 CFR 1.76	Attorney Docket Number	ALPH.P035
	Application Number	
Title of Invention	Dual Omnidirectional Microphone Array (DOMA)	

Publication Information:

☐	Request Early Publication (Fee required at time of Request 37 CFR 1.219)
☐	**Request Not to Publish.** I hereby request that the attached application not be published under 35 U.S. C. 122(b) and certify that the invention disclosed in the attached application **has not and will not** be the subject of an application filed in another country, or under a multilateral international agreement, that requires publication at eighteen months after filing.

Representative Information:

Representative information should be provided for all practitioners having a power of attorney in the application. Providing this information in the Application Data Sheet does not constitute a power of attorney in the application (see 37 CFR 1.32).
Enter either Customer Number or complete the Representative Name section below. If both sections are completed the Customer Number will be used for the Representative Information during processing.

Please Select One:	◉ Customer Number	◯ US Patent Practitioner	◯ Limited Recognition (37 CFR 11.9)
Customer Number	53186		

Domestic Benefit/National Stage Information:

This section allows for the applicant to either claim benefit under 35 U.S.C. 119(e), 120, 121, or 365(c) or indicate National Stage entry from a PCT application. Providing this information in the application data sheet constitutes the specific reference required by 35 U.S.C. 119(e) or 120, and 37 CFR 1.78(a)(2) or CFR 1.78(a)(4), and need not otherwise be made part of the specification.

Prior Application Status			Remove
Application Number	Continuity Type	Prior Application Number	Filing Date (YYYY-MM-DD)
		60934551	2007-06-13
Prior Application Status			Remove
Application Number	Continuity Type	Prior Application Number	Filing Date (YYYY-MM-DD)
		60953444	2007-08-01
Prior Application Status			Remove
Application Number	Continuity Type	Prior Application Number	Filing Date (YYYY-MM-DD)
		60954712	2007-08-08
Prior Application Status			Remove
Application Number	Continuity Type	Prior Application Number	Filing Date (YYYY-MM-DD)
		61045377	2008-04-16

Additional Domestic Benefit/National Stage Data may be generated within this form by selecting the **Add** button. Add

Foreign Priority Information:

This section allows for the applicant to claim benefit of foreign priority and to identify any prior foreign application for which priority is not claimed. Providing this information in the application data sheet constitutes the claim for priority as required by 35 U.S.C. 119(b) and 37 CFR 1.55(a).

Under the Paperwork Reduction Act of 1995, no persons are required to respond to a collection of information unless it contains a valid OMB control number.

Application Data Sheet 37 CFR 1.76	Attorney Docket Number	ALPH.P035
	Application Number	
Title of Invention	Dual Omnidirectional Microphone Array (DOMA)	

Remove

Application Number	Country [i]	Parent Filing Date (YYYY-MM-DD)	Priority Claimed
			◉ Yes ◯ No

Additional Foreign Priority Data may be generated within this form by selecting the **Add** button. Add

Assignee Information:

Providing this information in the application data sheet does not substitute for compliance with any requirement of part 3 of Title 37 of the CFR to have an assignment recorded in the Office.

Assignee 1 Remove

If the Assignee is an Organization check here. ☐

Prefix	**Given Name**	Middle Name	**Family Name**	Suffix

Mailing Address Information:

Address 1			
Address 2			
City		**State/Province**	
Country [i]		Postal Code	
Phone Number		Fax Number	
Email Address			

Additional Assignee Data may be generated within this form by selecting the **Add** button. Add

Signature:

A signature of the applicant or representative is required in accordance with 37 CFR 1.33 and 10.18. Please see 37 CFR 1.4(d) for the form of the signature.

Signature	/Richard L. Gregory, Jr./			Date (YYYY-MM-DD)	2008-06-13
First Name	Richard	Last Name	Gregory	Registration Number	42607

This collection of information is required by 37 CFR 1.76. The information is required to obtain or retain a benefit by the public which is to file (and by the USPTO to process) an application. Confidentiality is governed by 35 U.S.C. 122 and 37 CFR 1.14. This collection is estimated to take 23 minutes to complete, including gathering, preparing, and submitting the completed application data sheet form to the USPTO. Time will vary depending upon the individual case. Any comments on the amount of time you require to complete this form and/or suggestions for reducing this burden, should be sent to the Chief Information Officer, U.S. Patent and Trademark Office, U.S. Department of Commerce, P.O. Box 1450, Alexandria, VA 22313-1450. DO NOT SEND FEES OR COMPLETED FORMS TO THIS ADDRESS. **SEND TO: Commissioner for Patents, P.O. Box 1450, Alexandria, VA 22313-1450.**

Privacy Act Statement

The Privacy Act of 1974 (P.L. 93-579) requires that you be given certain information in connection with your submission of the attached form related to a patent application or patent. Accordingly, pursuant to the requirements of the Act, please be advised that: (1) the general authority for the collection of this information is 35 U.S.C. 2(b)(2); (2) furnishing of the information solicited is voluntary; and (3) the principal purpose for which the information is used by the U.S. Patent and Trademark Office is to process and/or examine your submission related to a patent application or patent. If you do not furnish the requested information, the U.S. Patent and Trademark Office may not be able to process and/or examine your submission, which may result in termination of proceedings or abandonment of the application or expiration of the patent.

The information provided by you in this form will be subject to the following routine uses:

1. The information on this form will be treated confidentially to the extent allowed under the Freedom of Information Act (5 U.S.C. 552) and the Privacy Act (5 U.S.C. 552a). Records from this system of records may be disclosed to the Department of Justice to determine whether the Freedom of Information Act requires disclosure of these records.

2. A record from this system of records may be disclosed, as a routine use, in the course of presenting evidence to a court, magistrate, or administrative tribunal, including disclosures to opposing counsel in the course of settlement negotiations.

3. A record in this system of records may be disclosed, as a routine use, to a Member of Congress submitting a request involving an individual, to whom the record pertains, when the individual has requested assistance from the Member with respect to the subject matter of the record.

4. A record in this system of records may be disclosed, as a routine use, to a contractor of the Agency having need for the information in order to perform a contract. Recipients of information shall be required to comply with the requirements of the Privacy Act of 1974, as amended, pursuant to 5 U.S.C. 552a(m).

5. A record related to an International Application filed under the Patent Cooperation Treaty in this system of records may be disclosed, as a routine use, to the International Bureau of the World Intellectual Property Organization, pursuant to the Patent Cooperation Treaty.

6. A record in this system of records may be disclosed, as a routine use, to another federal agency for purposes of National Security review (35 U.S.C. 181) and for review pursuant to the Atomic Energy Act (42 U.S.C. 218(c)).

7. A record from this system of records may be disclosed, as a routine use, to the Administrator, General Services, or his/her designee, during an inspection of records conducted by GSA as part of that agency's responsibility to recommend improvements in records management practices and programs, under authority of 44 U.S.C. 2904 and 2906. Such disclosure shall be made in accordance with the GSA regulations governing inspection of records for this purpose, and any other relevant (i.e., GSA or Commerce) directive. Such disclosure shall not be used to make determinations about individuals.

8. A record from this system of records may be disclosed, as a routine use, to the public after either publication of the application pursuant to 35 U.S.C. 122(b) or issuance of a patent pursuant to 35 U.S.C. 151. Further, a record may be disclosed, subject to the limitations of 37 CFR 1.14, as a routine use, to the public if the record was filed in an application which became abandoned or in which the proceedings were terminated and which application is referenced by either a published application, an application open to public inspections or an issued patent.

9. A record from this system of records may be disclosed, as a routine use, to a Federal, State, or local law enforcement agency, if the USPTO becomes aware of a violation or potential violation of law or regulation.

PTO/SB/06 (12-04)

Approved for use through 7/31/2006. OMB 0651-0032
U.S. Patent and Trademark Office; U.S. DEPARTMENT OF COMMERCE

Filing Date: 06/23/2008

Under the Paperwork Reduction Act of 1995, no persons are required to respond to a collection of information unless it displays a valid OMB control number.

PATENT APPLICATION FEE DETERMINATION RECORD

Substitute for Form PTO-875

Application or Docket Number: **12/139,333**

APPLICATION AS FILED – PART I

FOR	(Column 1) NUMBER FILED	(Column 2) NUMBER EXTRA	SMALL ENTITY RATE ($)	SMALL ENTITY FEE ($)	OR	OTHER THAN SMALL ENTITY RATE ($)	OTHER THAN SMALL ENTITY FEE ($)
BASIC FEE (37 CFR 1.16(a), (b), or (c))	N/A	N/A	N/A			N/A	310
SEARCH FEE (37 CFR 1.16(k), (i), or (m))	N/A	N/A	N/A			N/A	510
EXAMINATION FEE (37 CFR 1.16(o), (p), or (q))	N/A	N/A	N/A			N/A	210
TOTAL CLAIMS (37 CFR 1.16(i))	48	* 28	X 25=		OR	X 50=	1,400
INDEPENDENT CLAIMS (37 CFR 1.16(h))	6	* 3	X 100=			X 200=	630
APPLICATION SIZE FEE (37 CFR 1.16(s))	If the specification and drawings exceed 100 sheets of paper, the application size fee due is $260 ($130 for small entity) for each additional 50 sheets or fraction thereof. See 35 U.S.C. 41(a)(1)(G) and 37 CFR						
MULTIPLE DEPENDENT CLAIM PRESENT (37 CFR 1.16(j))			N/A			N/A	
			TOTAL			TOTAL	3060

* If the difference in column 1 is less than zero, enter "0" in column 2.

APPLICATION AS AMENDED – PART II

AMENDMENT A

	(Column 1) CLAIMS REMAINING AFTER AMENDMENT		(Column 2) HIGHEST NUMBER PREVIOUSLY PAID FOR	(Column 3) PRESENT EXTRA	SMALL ENTITY RATE ($)	SMALL ENTITY ADDI-TIONAL FEE ($)	OR	OTHER THAN SMALL ENTITY RATE ($)	OTHER THAN SMALL ENTITY ADDI-TIONAL FEE ($)
Total (37 CFR 1.16(i))	*	Minus	**	=	X =		OR	X =	
Independent (37 CFR 1.16(h))	*	Minus	***	=	X =		OR	X =	
Application Size Fee (37 CFR 1.16(s))									
FIRST PRESENTATION OF MULTIPLE DEPENDENT CLAIM (37 CFR 1.16(j))					N/A		OR	N/A	
					TOTAL ADD'T FEE		OR	TOTAL ADD'T FEE	

AMENDMENT B

	(Column 1) CLAIMS REMAINING AFTER AMENDMENT		(Column 2) HIGHEST NUMBER PREVIOUSLY PAID FOR	(Column 3) PRESENT EXTRA	RATE ($)	ADDI-TIONAL FEE ($)	OR	RATE ($)	ADDI-TIONAL FEE ($)
Total (37 CFR 1.16(i))	*	Minus	**	=	X =		OR	X =	
Independent (37 CFR 1.16(h))	*	Minus	***	=	X =		OR	X =	
Application Size Fee (37 CFR 1.16(s))									
FIRST PRESENTATION OF MULTIPLE DEPENDENT CLAIM (37 CFR 1.16(j))					N/A		OR	N/A	
					TOTAL ADD'T FEE		OR	TOTAL ADD'T FEE	

* If the entry in column 1 is less than the entry in column 2, write "0" in column 3.
** If the "Highest Number Previously Paid For" IN THIS SPACE is less than 20, enter "20".
*** If the "Highest Number Previously Paid For" IN THIS SPACE is less than 3, enter "3".
The "Highest Number Previously Paid For" (Total or Independent) is the highest number found in the appropriate box in column 1.

This collection of information is required by 37 CFR 1.16. The information is required to obtain or retain a benefit by the public which is to file (and by the USPTO to process) an application. Confidentiality is governed by 35 U.S.C. 122 and 37 CFR 1.14. This collection is estimated to take 12 minutes to complete, including gathering, preparing, and submitting the completed application form to the USPTO. Time will vary depending upon the individual case. Any comments on the amount of time you require to complete this form and/or suggestions for reducing this burden, should be sent to the Chief Information Officer, U.S. Patent and Trademark Office, U.S. Department of Commerce, P.O. Box 1450, Alexandria, VA 22313-1450. DO NOT SEND FEES OR COMPLETED FORMS TO THIS ADDRESS. **SEND TO: Commissioner for Patents, P.O. Box 1450, Alexandria, VA 22313-1450.**

If you need assistance in completing the form, call 1-800-PTO-9199 and select option 2.

UNITED STATES PATENT AND TRADEMARK OFFICE

UNITED STATES DEPARTMENT OF COMMERCE
United States Patent and Trademark Office
Address: COMMISSIONER FOR PATENTS
P.O. Box 1450
Alexandria, Virginia 22313-1450
www.uspto.gov

APPLICATION NUMBER	FILING OR 371(C) DATE	FIRST NAMED APPLICANT	ATTY. DOCKET NO./TITLE
12/139,333	06/13/2008	Gregory C. Burnett	ALPH.P035

CONFIRMATION NO. 1204

FORMALITIES LETTER

53186
COURTNEY STANIFORD & GREGORY LLP
P.O. BOX 9686
SAN JOSE, CA 95157

OC000000030671485

Date Mailed: 06/27/2008

NOTICE TO FILE MISSING PARTS OF NONPROVISIONAL APPLICATION

FILED UNDER 37 CFR 1.53(b)

Filing Date Granted

Items Required To Avoid Abandonment:

An application number and filing date have been accorded to this application. The item(s) indicated below, however, are missing. Applicant is given **TWO MONTHS** from the date of this Notice within which to file all required items and pay any fees required below to avoid abandonment. Extensions of time may be obtained by filing a petition accompanied by the extension fee under the provisions of 37 CFR 1.136(a).

- The oath or declaration is missing.
  A properly signed oath or declaration in compliance with 37 CFR 1.63, identifying the application by the above Application Number and Filing Date, is required.
  Note: If a petition under 37 CFR 1.47 is being filed, an oath or declaration in compliance with 37 CFR 1.63 signed by all available joint inventors, or if no inventor is available by a party with sufficient proprietary interest, is required.

The application is informal since it does not comply with the regulations for the reason(s) indicated below.

The required item(s) identified below must be timely submitted to avoid abandonment:

- Replacement drawings in compliance with 37 CFR 1.84 and 37 CFR 1.121(d) are required. The drawings submitted are not acceptable because:
  - The drawings must be reasonably free from erasures and must be free from alterations, overwriting, interlineations, folds, and copy marks. See Figure(s) 1.

Applicant is cautioned that correction of the above items may cause the specification and drawings page count to exceed 100 pages. If the specification and drawings exceed 100 pages, applicant will need to submit the required application size fee.

The applicant needs to satisfy supplemental fees problems indicated below.

The required item(s) identified below must be timely submitted to avoid abandonment:

- To avoid abandonment, a surcharge (for late submission of filing fee, search fee, examination fee or oath or declaration) as set forth in 37 CFR 1.16(f) of $**130** for a non-small entity, must be submitted with the missing items identified in this notice.

SUMMARY OF FEES DUE:

Total additional fee(s) required for this application is $**130** for a non-small entity
- $**130** Surcharge.

Replies should be mailed to:

Mail Stop Missing Parts
Commissioner for Patents
P.O. Box 1450
Alexandria VA 22313-1450

Registered users of EFS-Web may alternatively submit their reply to this notice via EFS-Web.
https://sportal.uspto.gov/authenticate/AuthenticateUserLocalEPF.html

For more information about EFS-Web please call the USPTO Electronic Business Center at **1-866-217-9197** or visit our website at http://www.uspto.gov/ebc.

If you are not using EFS-Web to submit your reply, you must include a copy of this notice.

/tvo/

Office of Data Management, Application Assistance Unit (571) 272-4000, or (571) 272-4200, or 1-888-786-0101

UNITED STATES PATENT AND TRADEMARK OFFICE

UNITED STATES DEPARTMENT OF COMMERCE
United States Patent and Trademark Office
Address: COMMISSIONER FOR PATENTS
P.O. Box 1450
Alexandria, Virginia 22313-1450
www.uspto.gov

APPLICATION NUMBER	FILING or 371(c) DATE	GRP ART UNIT	FIL FEE REC'D	ATTY.DOCKET.NO	TOT CLAIMS	IND CLAIMS
12/139,333	06/13/2008	2615	3060	ALPH.P035	48	6

CONFIRMATION NO. 1204

53186
COURTNEY STANIFORD & GREGORY LLP
P.O. BOX 9686
SAN JOSE, CA 95157

FILING RECEIPT

OC000000030671484

Date Mailed: 06/27/2008

Receipt is acknowledged of this non-provisional patent application. The application will be taken up for examination in due course. Applicant will be notified as to the results of the examination. Any correspondence concerning the application must include the following identification information: the U.S. APPLICATION NUMBER, FILING DATE, NAME OF APPLICANT, and TITLE OF INVENTION. Fees transmitted by check or draft are subject to collection. Please verify the accuracy of the data presented on this receipt. **If an error is noted on this Filing Receipt, please submit a written request for a Filing Receipt Correction. Please provide a copy of this Filing Receipt with the changes noted thereon. If you received a "Notice to File Missing Parts" for this application, please submit any corrections to this Filing Receipt with your reply to the Notice. When the USPTO processes the reply to the Notice, the USPTO will generate another Filing Receipt incorporating the requested corrections**

Applicant(s)

Gregory C. Burnett, Dodge Center, MN;

Power of Attorney: None

Domestic Priority data as claimed by applicant

This appln claims benefit of 60/934,551 06/13/2007
and claims benefit of 60/953,444 08/01/2007
and claims benefit of 60/954,712 08/08/2007
and claims benefit of 61/045,377 04/16/2008

Foreign Applications

If Required, Foreign Filing License Granted: 06/25/2008

The country code and number of your priority application, to be used for filing abroad under the Paris Convention, is **US 12/139,333**

Projected Publication Date: To Be Determined - pending completion of Missing Parts

Non-Publication Request: No

Early Publication Request: No

Title

Dual Omnidirectional Microphone Array (DOMA)

Preliminary Class

381

PROTECTING YOUR INVENTION OUTSIDE THE UNITED STATES

Since the rights granted by a U.S. patent extend only throughout the territory of the United States and have no effect in a foreign country, an inventor who wishes patent protection in another country must apply for a patent in a specific country or in regional patent offices. Applicants may wish to consider the filing of an international application under the Patent Cooperation Treaty (PCT). An international (PCT) application generally has the same effect as a regular national patent application in each PCT-member country. The PCT process **simplifies** the filing of patent applications on the same invention in member countries, but **does not result** in a grant of "an international patent" and does not eliminate the need of applicants to file additional documents and fees in countries where patent protection is desired.

Almost every country has its own patent law, and a person desiring a patent in a particular country must make an application for patent in that country in accordance with its particular laws. Since the laws of many countries differ in various respects from the patent law of the United States, applicants are advised to seek guidance from specific foreign countries to ensure that patent rights are not lost prematurely.

Applicants also are advised that in the case of inventions made in the United States, the Director of the USPTO must issue a license before applicants can apply for a patent in a foreign country. The filing of a U.S. patent application serves as a request for a foreign filing license. The application's filing receipt contains further information and guidance as to the status of applicant's license for foreign filing.

Applicants may wish to consult the USPTO booklet, "General Information Concerning Patents" (specifically, the section entitled "Treaties and Foreign Patents") for more information on timeframes and deadlines for filing foreign patent applications. The guide is available either by contacting the USPTO Contact Center at 800-786-9199, or it can be viewed on the USPTO website at http://www.uspto.gov/web/offices/pac/doc/general/index.html.

For information on preventing theft of your intellectual property (patents, trademarks and copyrights), you may wish to consult the U.S. Government website, http://www.stopfakes.gov. Part of a Department of Commerce initiative, this website includes self-help "toolkits" giving innovators guidance on how to protect intellectual property in specific countries such as China, Korea and Mexico. For questions regarding patent enforcement issues, applicants may call the U.S. Government hotline at 1-866-999-HALT (1-866-999-4158).

LICENSE FOR FOREIGN FILING UNDER

Title 35, United States Code, Section 184

Title 37, Code of Federal Regulations, 5.11 & 5.15

GRANTED

The applicant has been granted a license under 35 U.S.C. 184, if the phrase "IF REQUIRED, FOREIGN FILING LICENSE GRANTED" followed by a date appears on this form. Such licenses are issued in all applications where the conditions for issuance of a license have been met, regardless of whether or not a license may be required as

set forth in 37 CFR 5.15. The scope and limitations of this license are set forth in 37 CFR 5.15(a) unless an earlier license has been issued under 37 CFR 5.15(b). The license is subject to revocation upon written notification. The date indicated is the effective date of the license, unless an earlier license of similar scope has been granted under 37 CFR 5.13 or 5.14.

This license is to be retained by the licensee and may be used at any time on or after the effective date thereof unless it is revoked. This license is automatically transferred to any related applications(s) filed under 37 CFR 1.53(d). This license is not retroactive.

The grant of a license does not in any way lessen the responsibility of a licensee for the security of the subject matter as imposed by any Government contract or the provisions of existing laws relating to espionage and the national security or the export of technical data. Licensees should apprise themselves of current regulations especially with respect to certain countries, of other agencies, particularly the Office of Defense Trade Controls, Department of State (with respect to Arms, Munitions and Implements of War (22 CFR 121-128)); the Bureau of Industry and Security, Department of Commerce (15 CFR parts 730-774); the Office of Foreign AssetsControl, Department of Treasury (31 CFR Parts 500+) and the Department of Energy.

NOT GRANTED

No license under 35 U.S.C. 184 has been granted at this time, if the phrase "IF REQUIRED, FOREIGN FILING LICENSE GRANTED" DOES NOT appear on this form. Applicant may still petition for a license under 37 CFR 5.12, if a license is desired before the expiration of 6 months from the filing date of the application. If 6 months has lapsed from the filing date of this application and the licensee has not received any indication of a secrecy order under 35 U.S.C. 181, the licensee may foreign file the application pursuant to 37 CFR 5.15(b).

IN THE UNITED STATES PATENT OFFICE

In Re Patent Application of:	)	
	)	
First Named Inventor: Gregory C. Burnett	)	Examiner: Not assigned
	)	
Application No. 12/139,333	)	Art Unit: 2615
	)	
Filed: June 13, 2008	)	
	)	
For: DUAL OMNIDIRECTIONAL MICROPHONE ARRAY (DOMA)	)	

Commissioner for Patents
P.O. Box 1450
Alexandria, VA 22313-1450

PRELIMINARY AMENDMENT

Sir:

Please enter the following amendments before examination of this application.

IN THE DRAWINGS

Please amend the drawings as follows.

Please replace sheets 1-17 of the drawings with the replacement sheets enclosed herewith.

REMARKS

Applicants respectfully request entry of the foregoing amendments before examination of the application. Applicants state that no new matter is added by the replacement drawings.

Authorization to Charge Deposit Account

The Commissioner is authorized to charge any additional fees which may be required in connection with this Preliminary Amendment, including petition fees and extension of time fees, to Deposit Account Number 503616 (Attorney Docket Number ALPH.P035).

Respectfully submitted,
Courtney Staniford & Gregory & LLP

Date: September 15, 2008

Richard L. Gregory, Jr.
Reg. No. 42,607

Customer Number 53186
P.O. Box 9686
San Jose, CA 95157
Tel: 408-342-1900
Fax: 408-342-1909

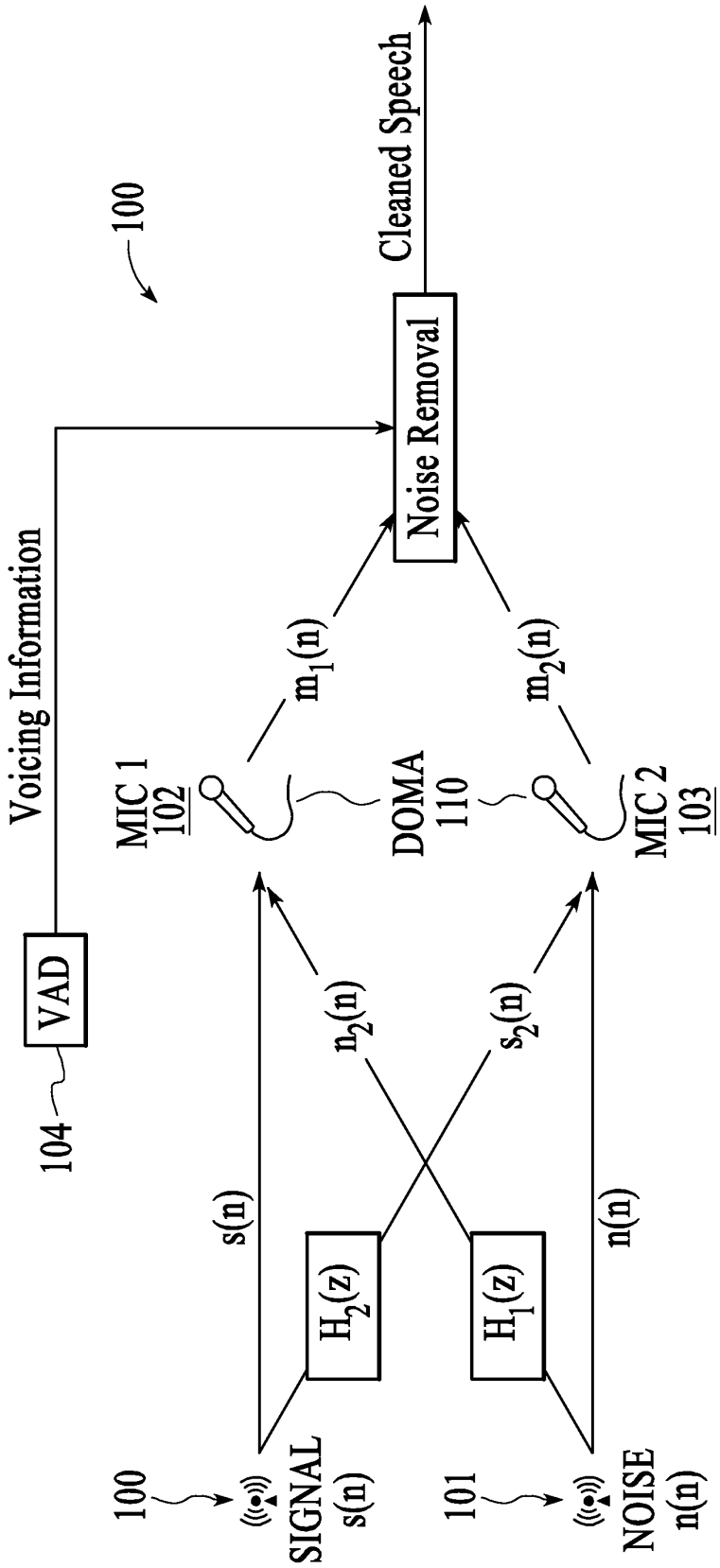
100
Cleaned Speech
Noise Removal
Voicing Information
VAD
104
MIC 1
102
DOMA
110
MIC 2
103
$m_1(n)$
$m_2(n)$
$n_2(n)$
$s_2(n)$
s(n)
n(n)
$H_2(z)$
$H_1(z)$
100
SIGNAL
s(n)
101
NOISE
n(n)

FIG.1

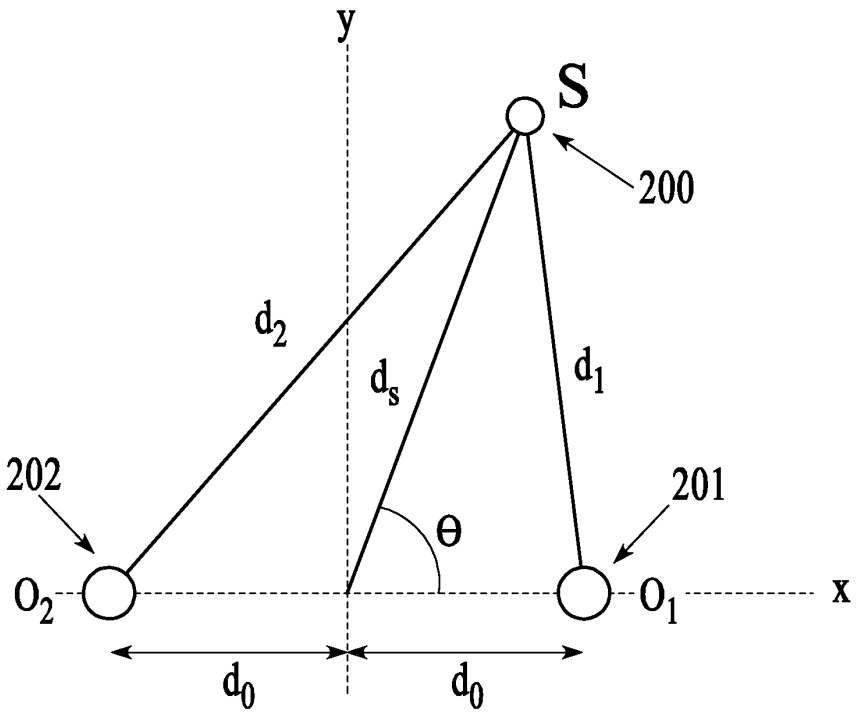
y
S
200
d2
ds
d1
202
201
θ
O2
O1
x
d0
d0

FIG.2

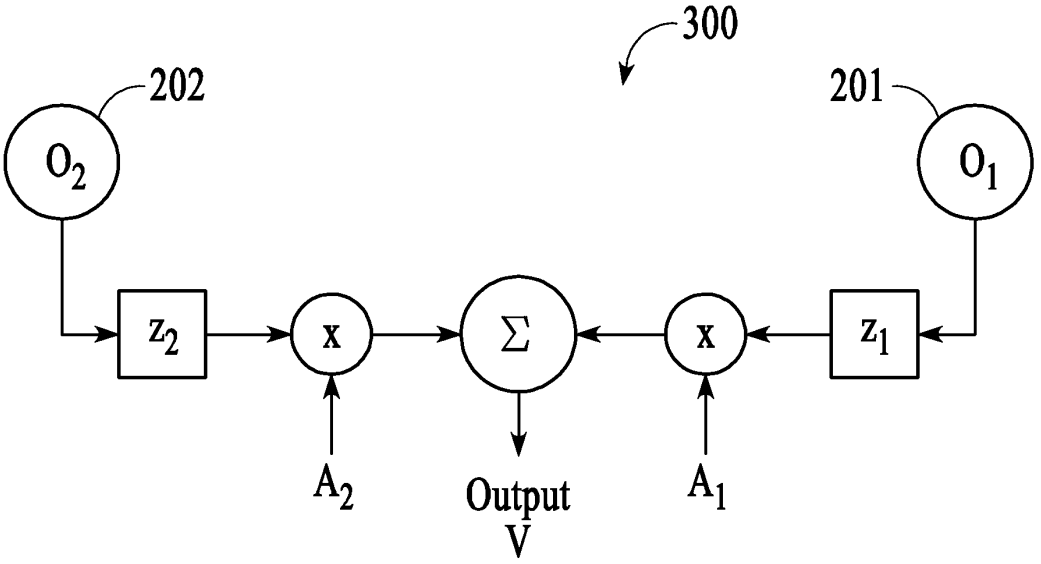
300
202
201
O2
O1
z2
x
Σ
x
z1
A2
Output
V
A1

FIG.3

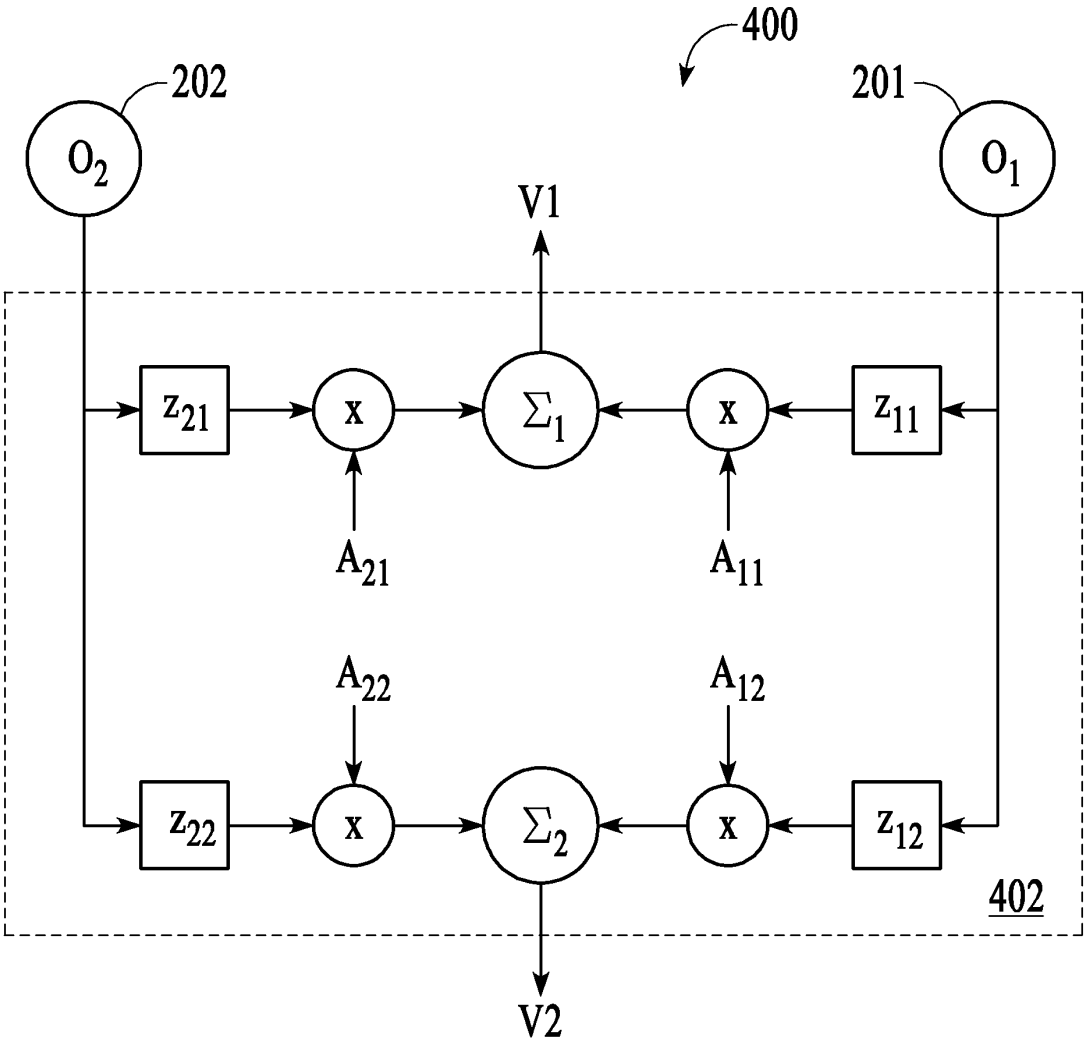
400
202
201
O2
O1
V1
z21
x
Σ1
x
z11
A21
A11
A22
A12
z22
x
Σ2
x
z12
402
V2

FIG.4

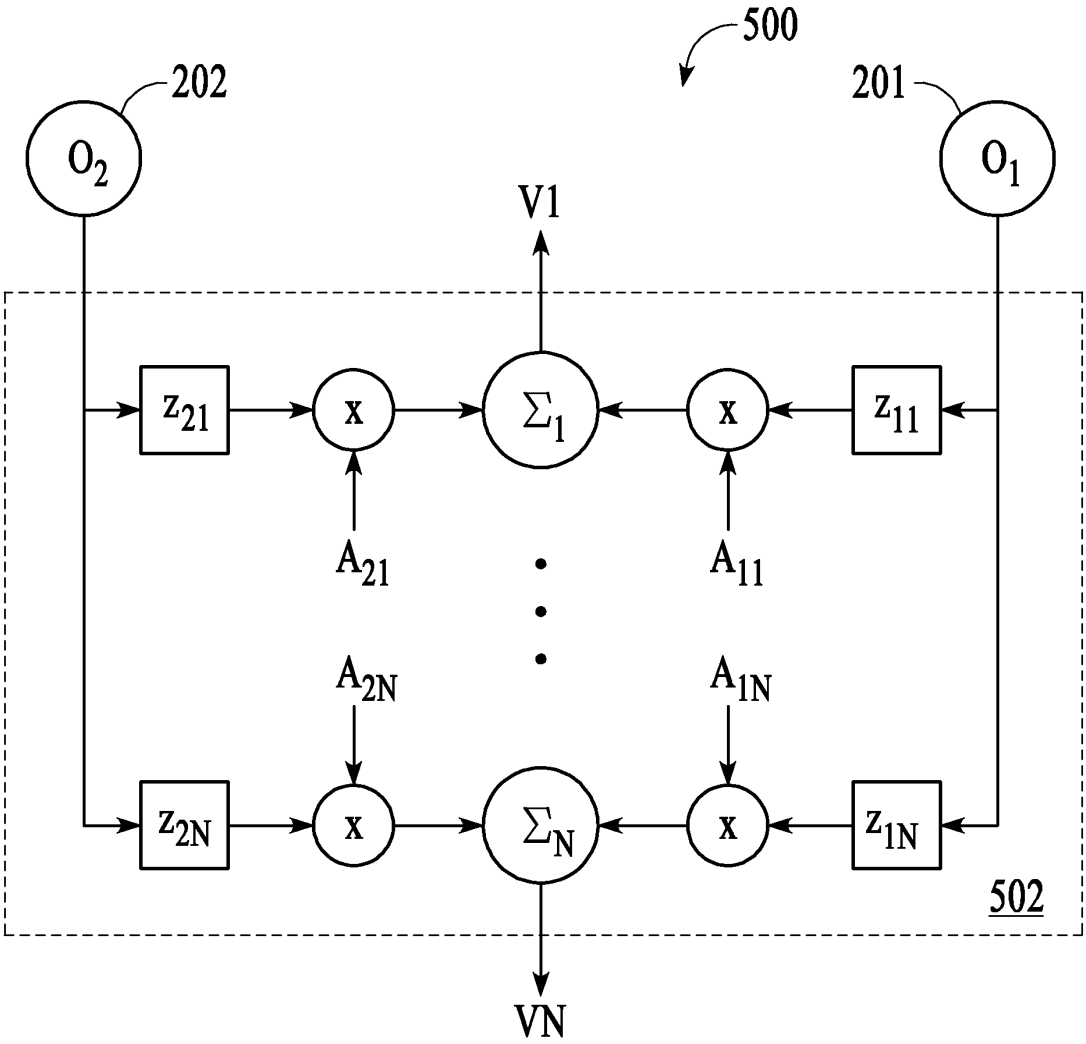
500
202
201
O2
O1
V1
z21
x
Σ1
x
z11
A21
A11
A2N
A1N
z2N
x
ΣN
x
z1N
502
VN

FIG.5

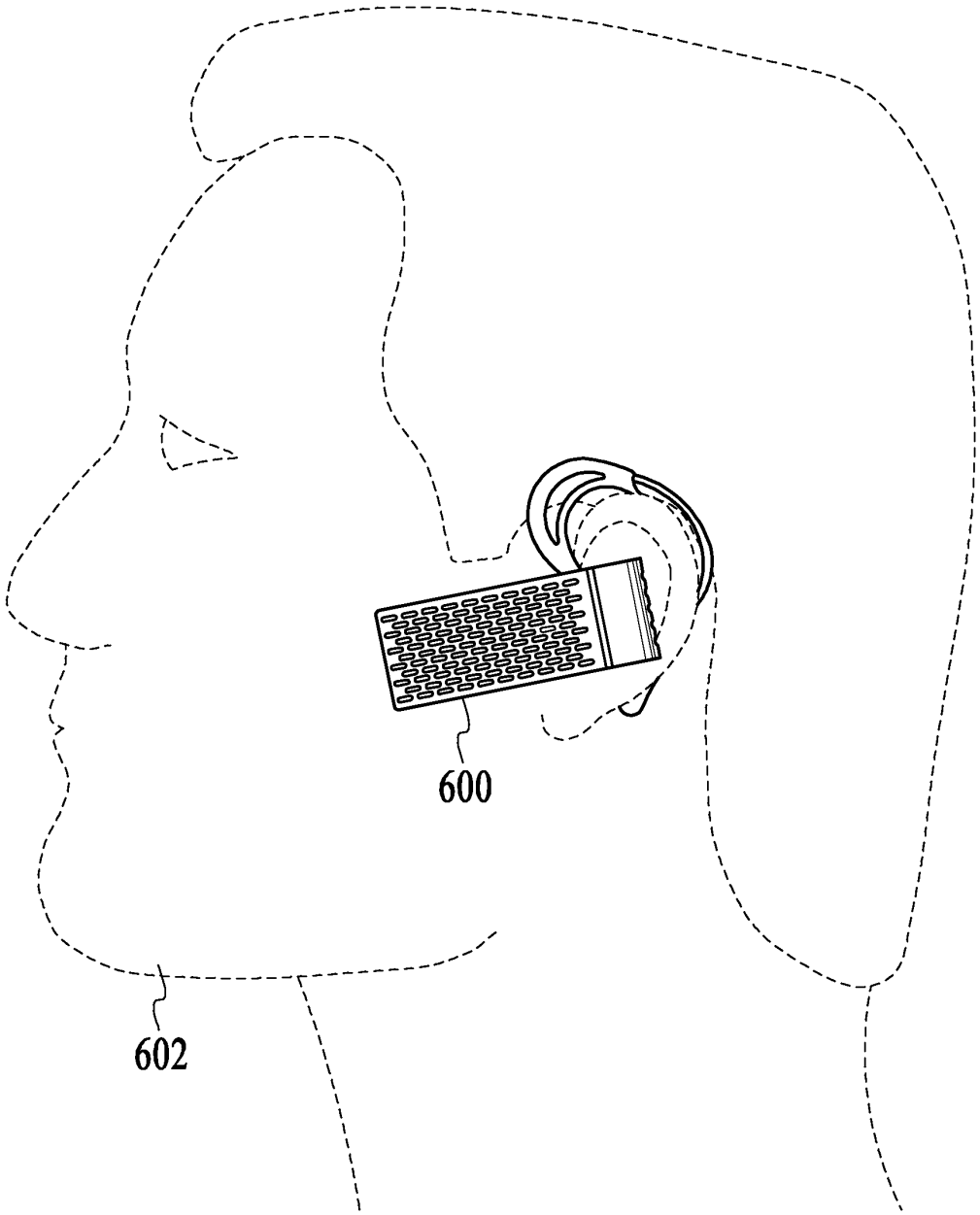

FIG.6

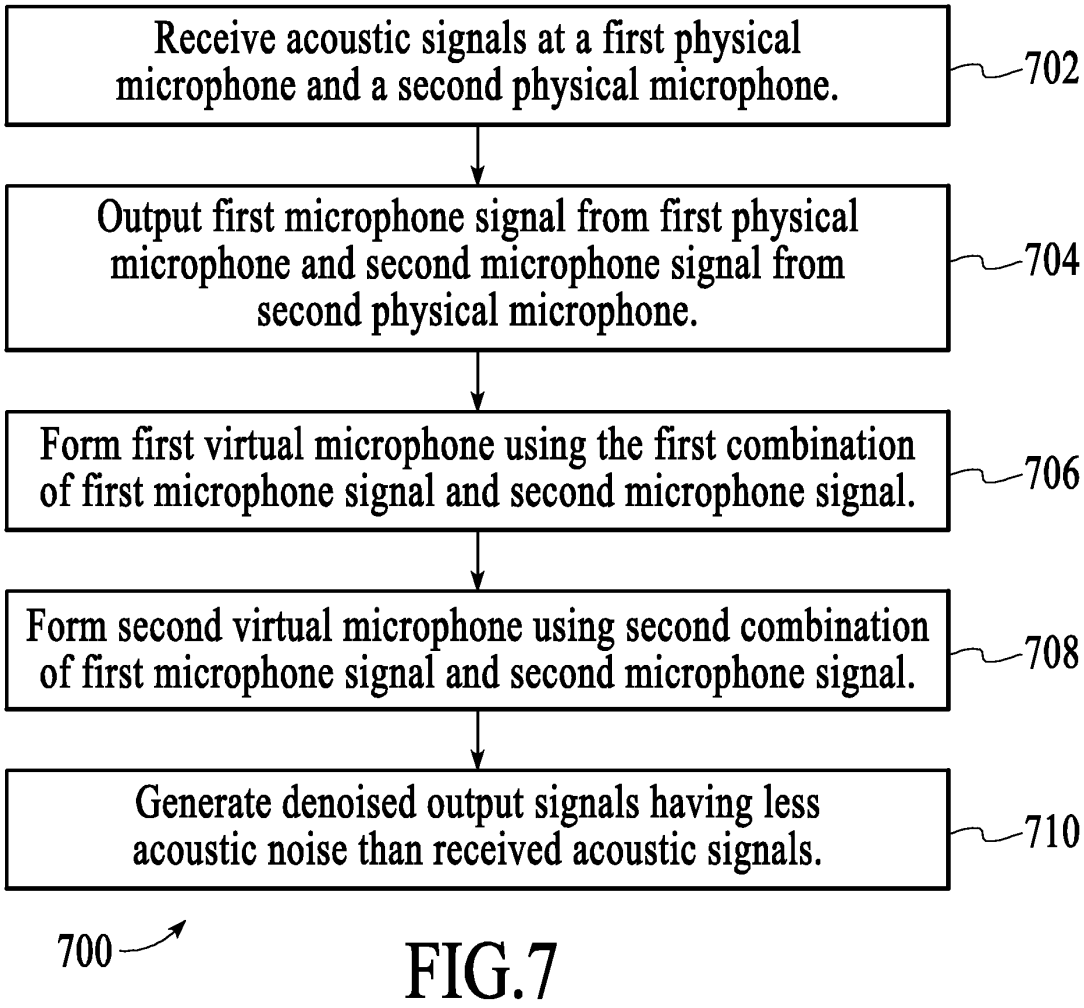
Receive acoustic signals at a first physical microphone and a second physical microphone.
702
Output first microphone signal from first physical microphone and second microphone signal from second physical microphone.
704
Form first virtual microphone using the first combination of first microphone signal and second microphone signal.
706
Form second virtual microphone using second combination of first microphone signal and second microphone signal.
708
Generate denoised output signals having less acoustic noise than received acoustic signals.
710
700

FIG.7

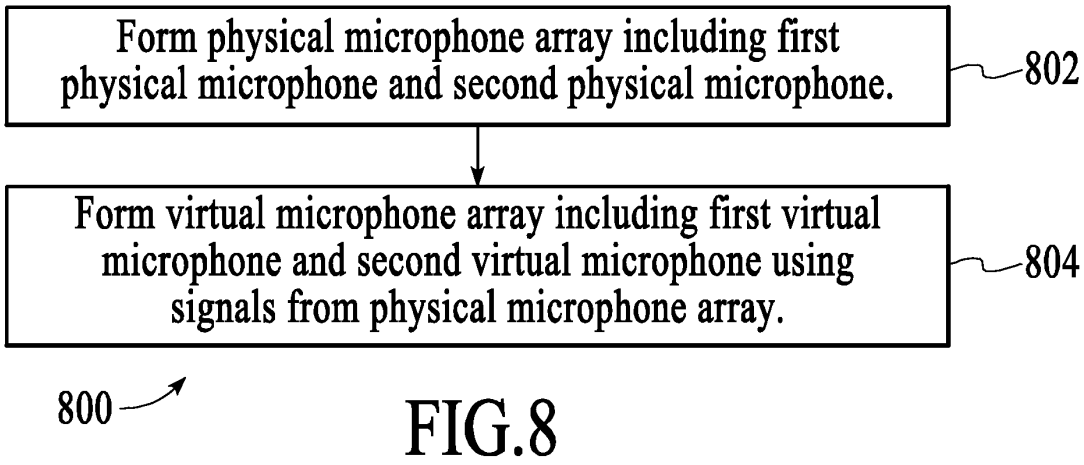
Form physical microphone array including first physical microphone and second physical microphone.
802
Form virtual microphone array including first virtual microphone and second virtual microphone using signals from physical microphone array.
804
800

FIG.8

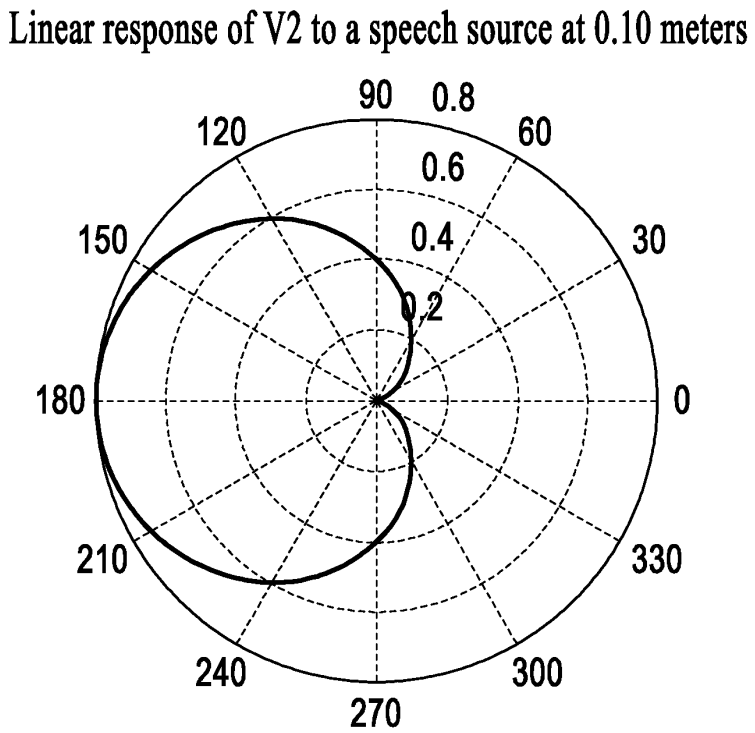
Linear response of V2 to a speech source at 0.10 meters
90
0.8
120
60
0.6
150
0.4
30
0.2
180
0
210
330
240
300
270

FIG.9

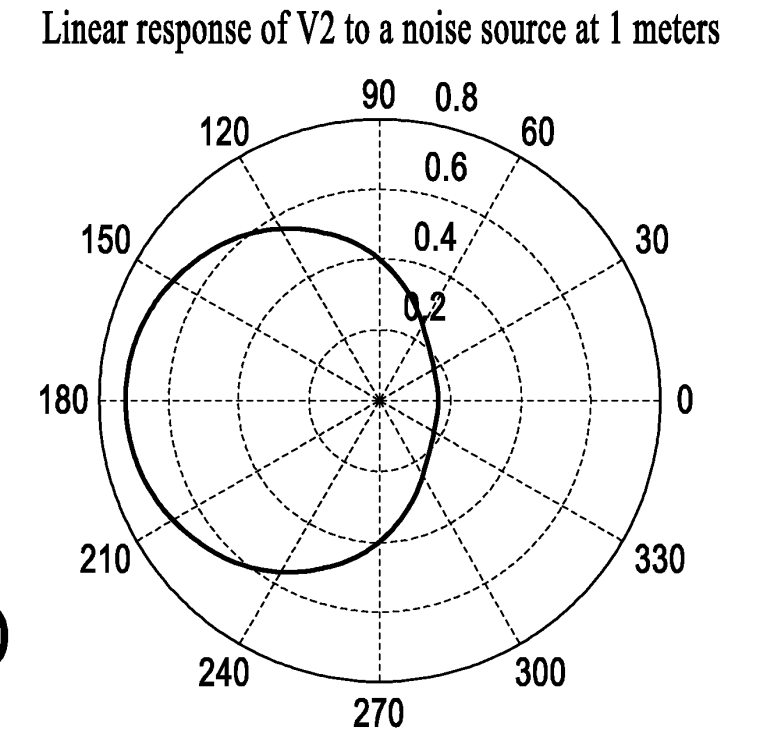
Linear response of V2 to a noise source at 1 meters
90
0.8
120
60
0.6
150
0.4
30
0.2
180
0
210
330
240
300
270

FIG.10

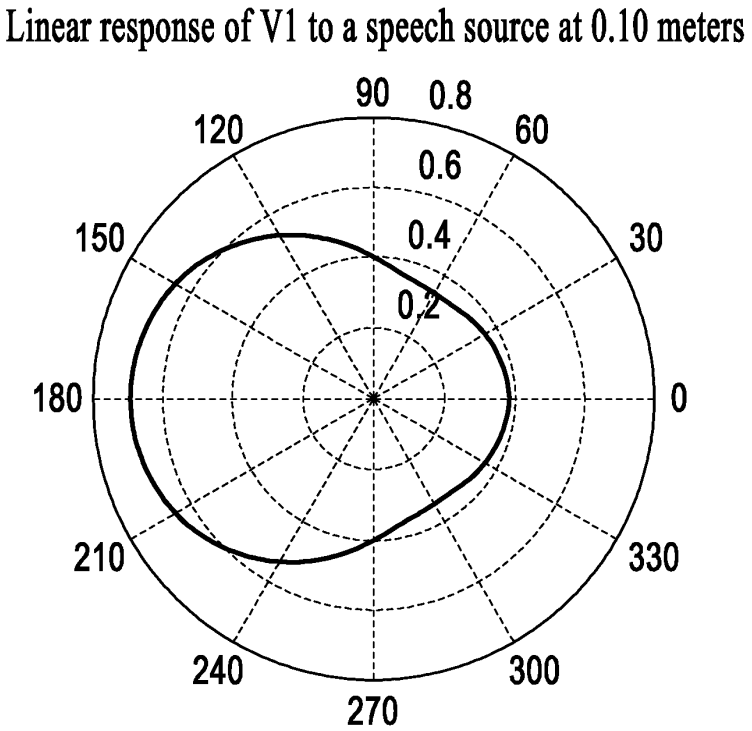
Linear response of V1 to a speech source at 0.10 meters
90
0.8
120
60
0.6
150
0.4
30
0.2
180
0
210
330
240
300
270

FIG.11

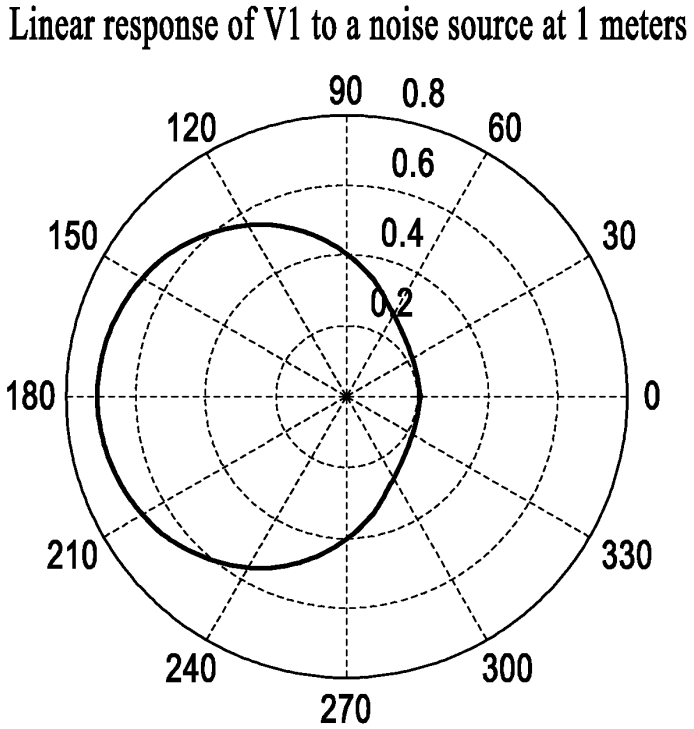
Linear response of V1 to a noise source at 1 meters
90
0.8
120
60
0.6
150
0.4
30
0.2
180
0
210
330
240
300
270

FIG.12

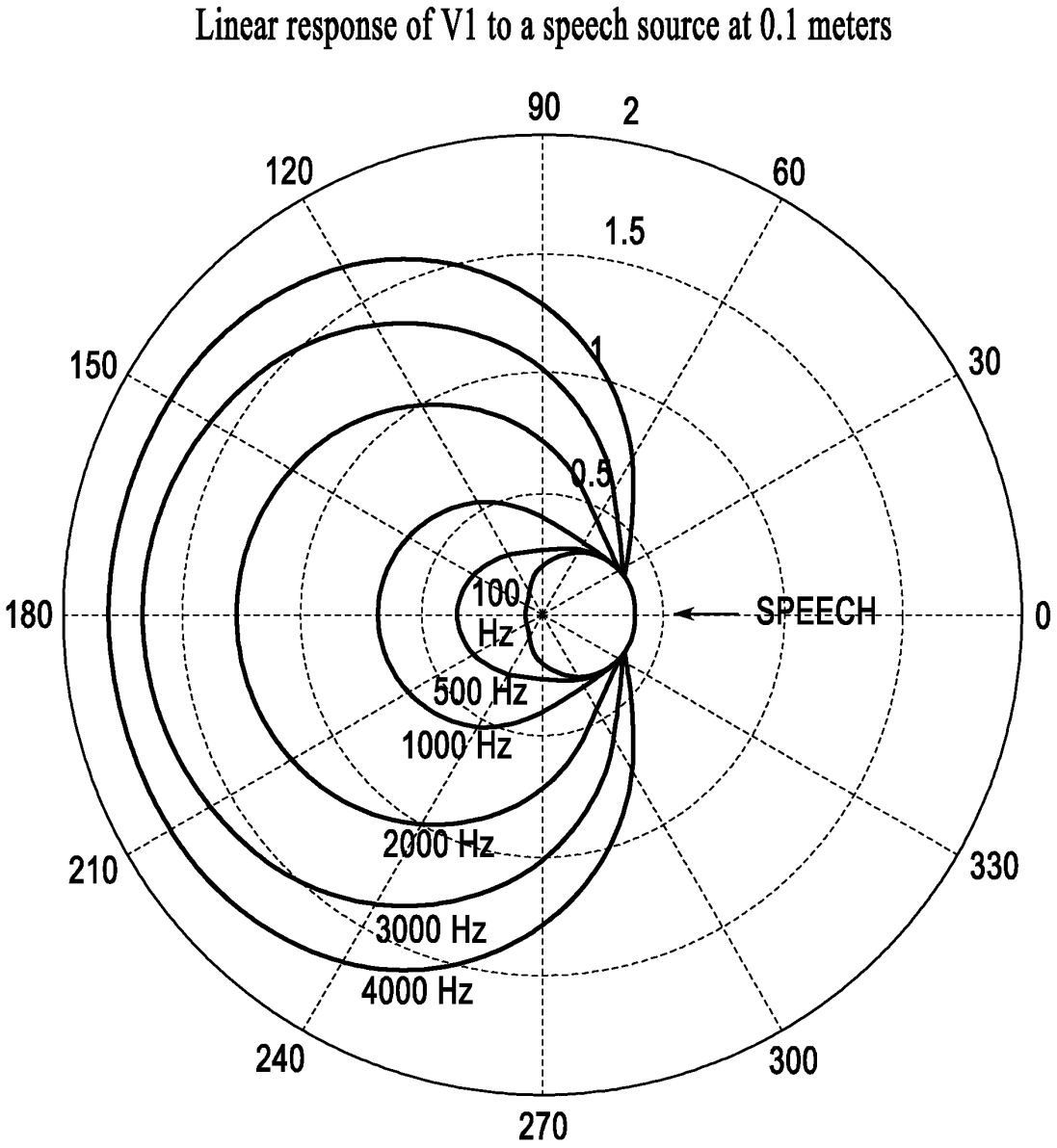
Linear response of V1 to a speech source at 0.1 meters
90
2
120
60
1.5
150
30
1
0.5
180
0
100 Hz
SPEECH
500 Hz
1000 Hz
2000 Hz
210
330
3000 Hz
4000 Hz
240
300
270

FIG.13

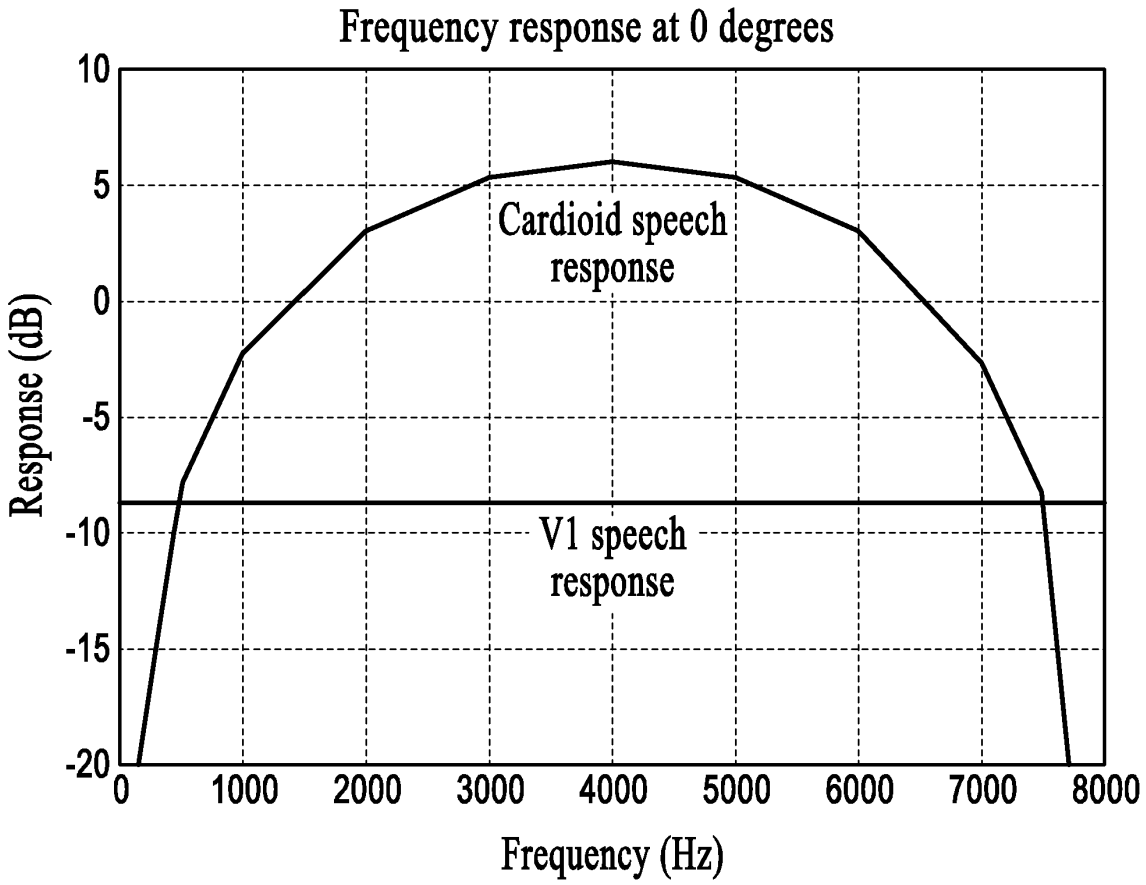
Frequency response at 0 degrees
Response (dB)
10
5
0
-5
-10
-15
-20
0
1000
2000
3000
4000
5000
6000
7000
8000
Frequency (Hz)
Cardioid speech response
V1 speech response

FIG.14

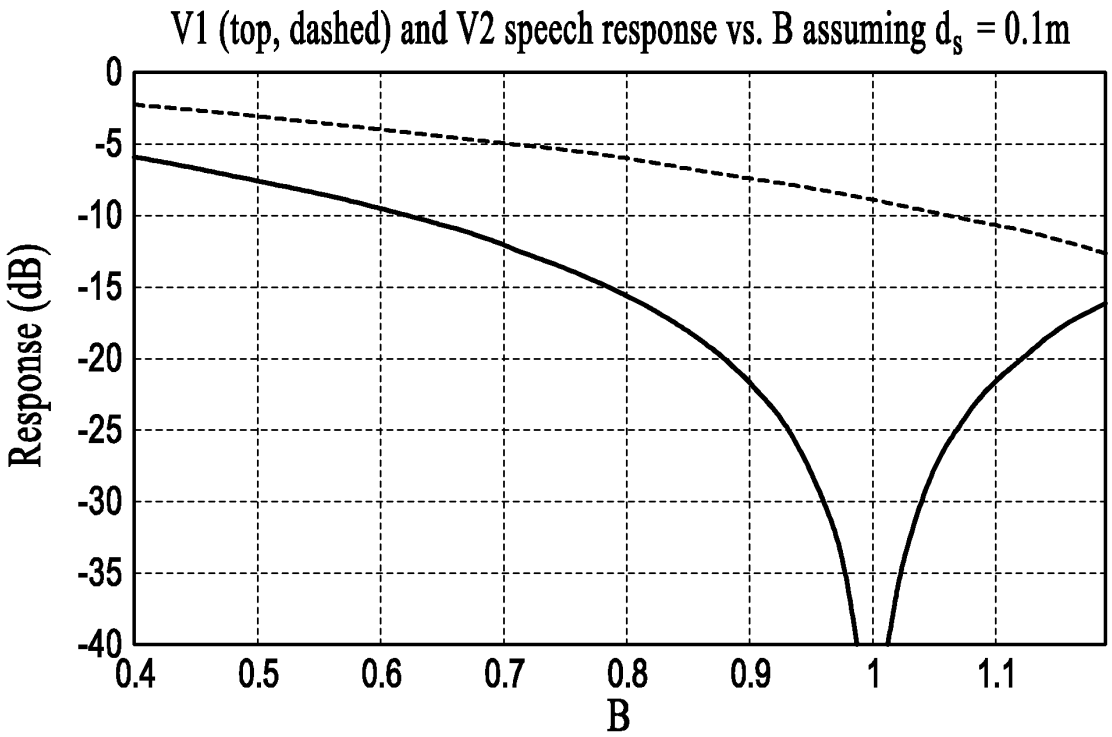
V1 (top, dashed) and V2 speech response vs. B assuming d_s = 0.1m
Response (dB)
0
-5
-10
-15
-20
-25
-30
-35
-40
0.4
0.5
0.6
0.7
0.8
0.9
1
1.1
B

FIG.15

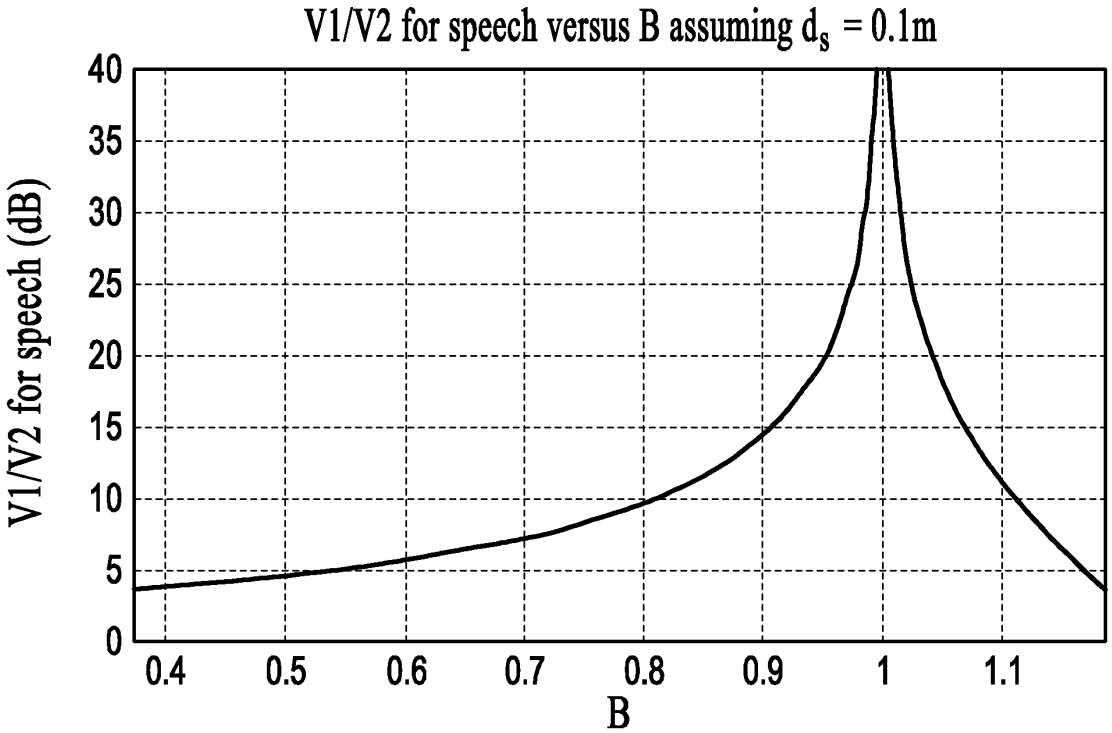
V1/V2 for speech versus B assuming d_s = 0.1m
V1/V2 for speech (dB)
40
35
30
25
20
15
10
5
0
0.4
0.5
0.6
0.7
0.8
0.9
1
1.1
B

FIG.16

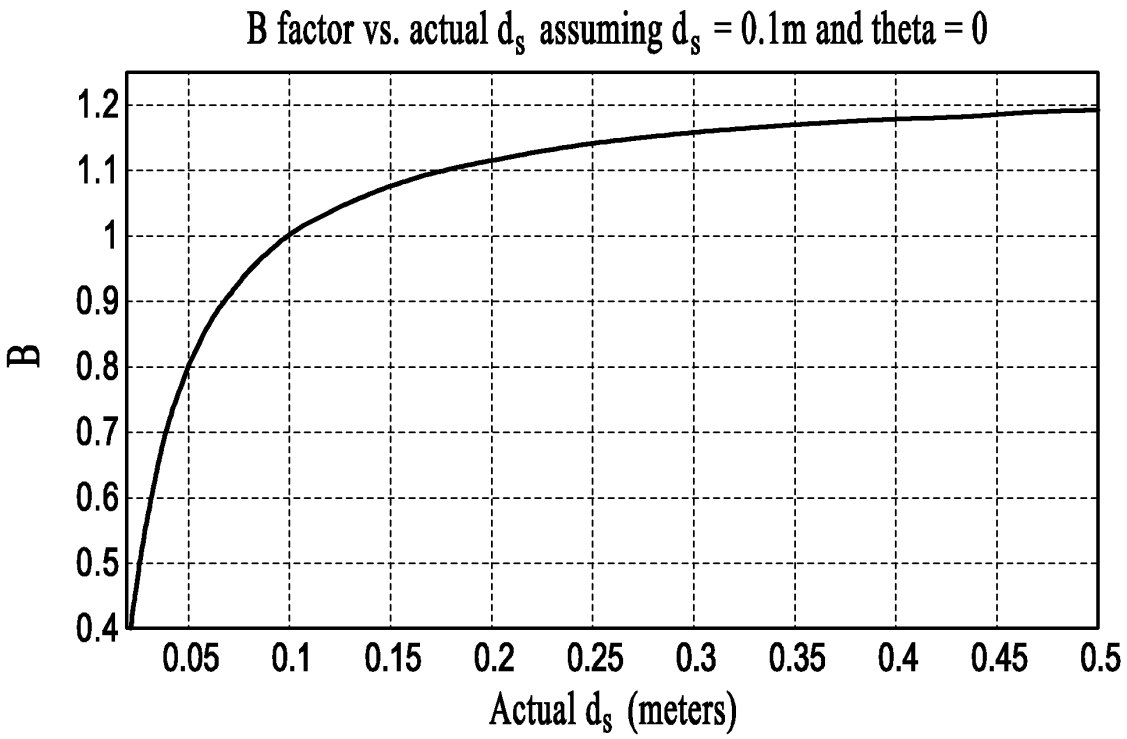
B factor vs. actual d_s assuming d_s = 0.1m and theta = 0
B
1.2
1.1
1
0.9
0.8
0.7
0.6
0.5
0.4
0.05
0.1
0.15
0.2
0.25
0.3
0.35
0.4
0.45
0.5
Actual d_s (meters)

FIG.17

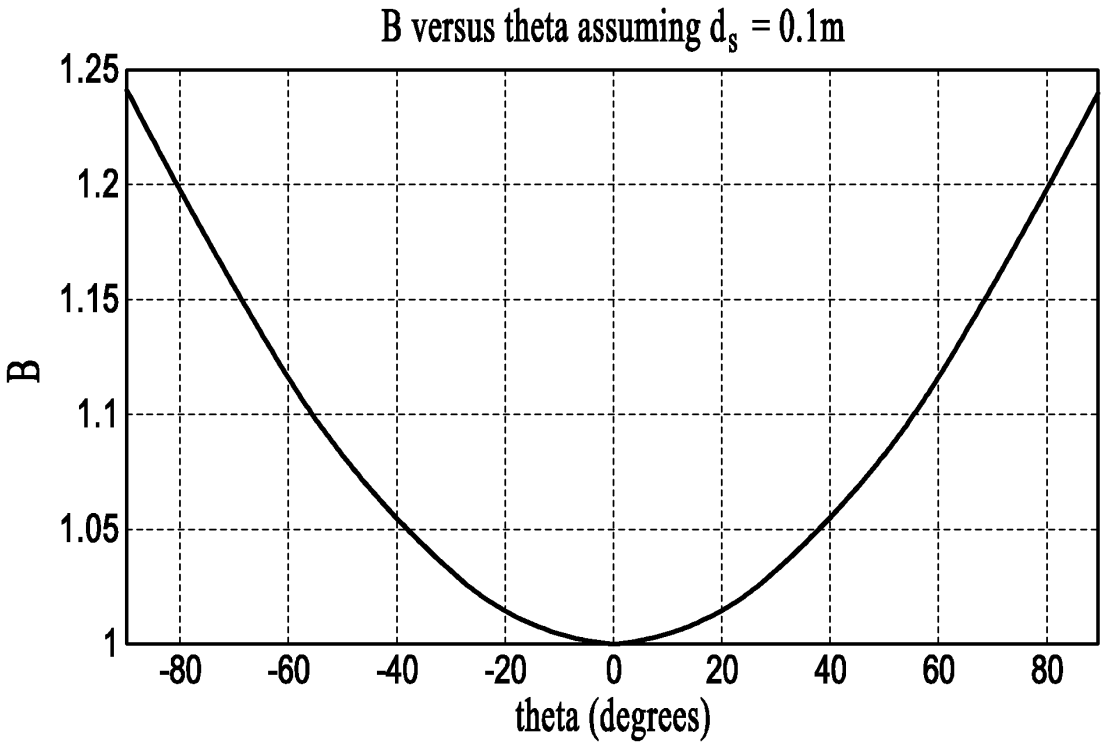
B versus theta assuming d_s = 0.1m
B
1.25
1.2
1.15
1.1
1.05
1
-80
-60
-40
-20
0
20
40
60
80
theta (degrees)

FIG.18

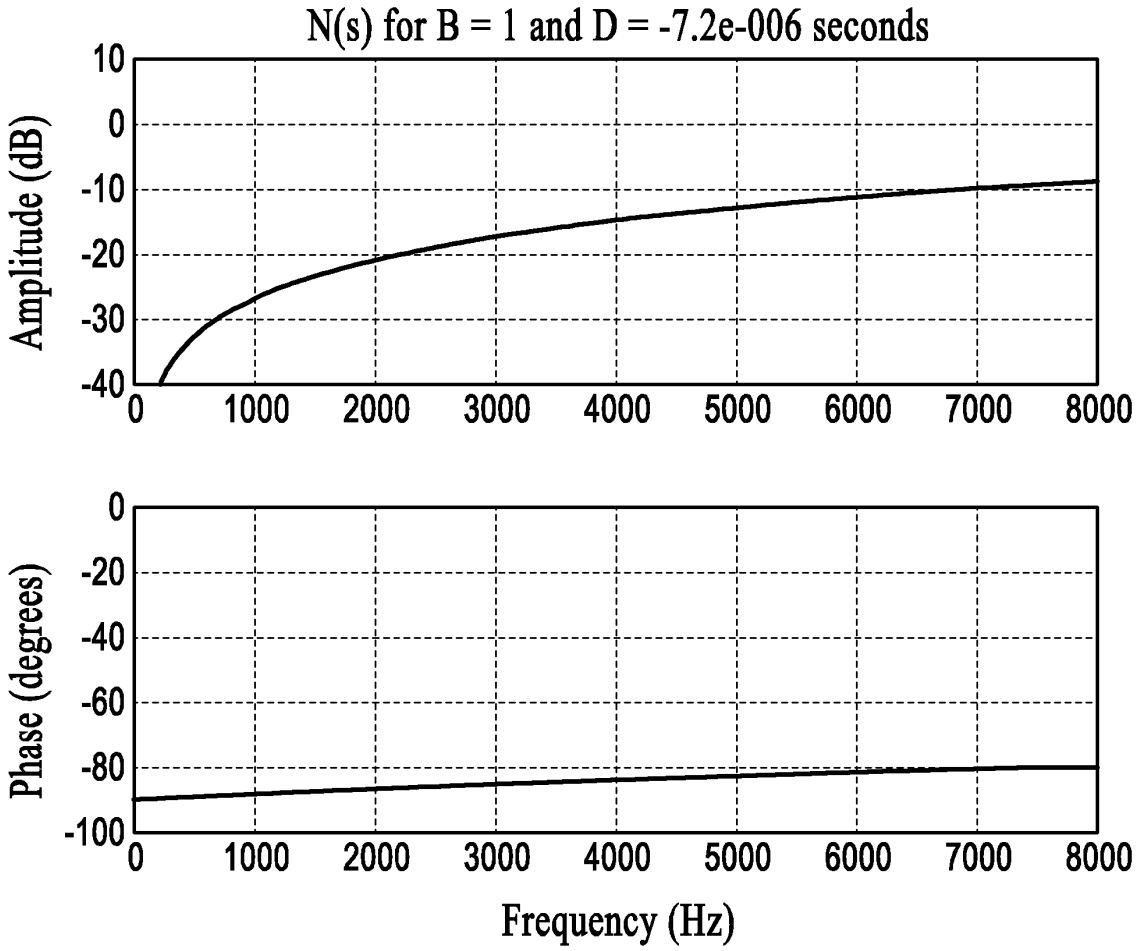
N(s) for B = 1 and D = -7.2e-006 seconds
Amplitude (dB)
10
0
-10
-20
-30
-40
0
1000
2000
3000
4000
5000
6000
7000
8000
Phase (degrees)
0
-20
-40
-60
-80
-100
Frequency (Hz)

FIG.19

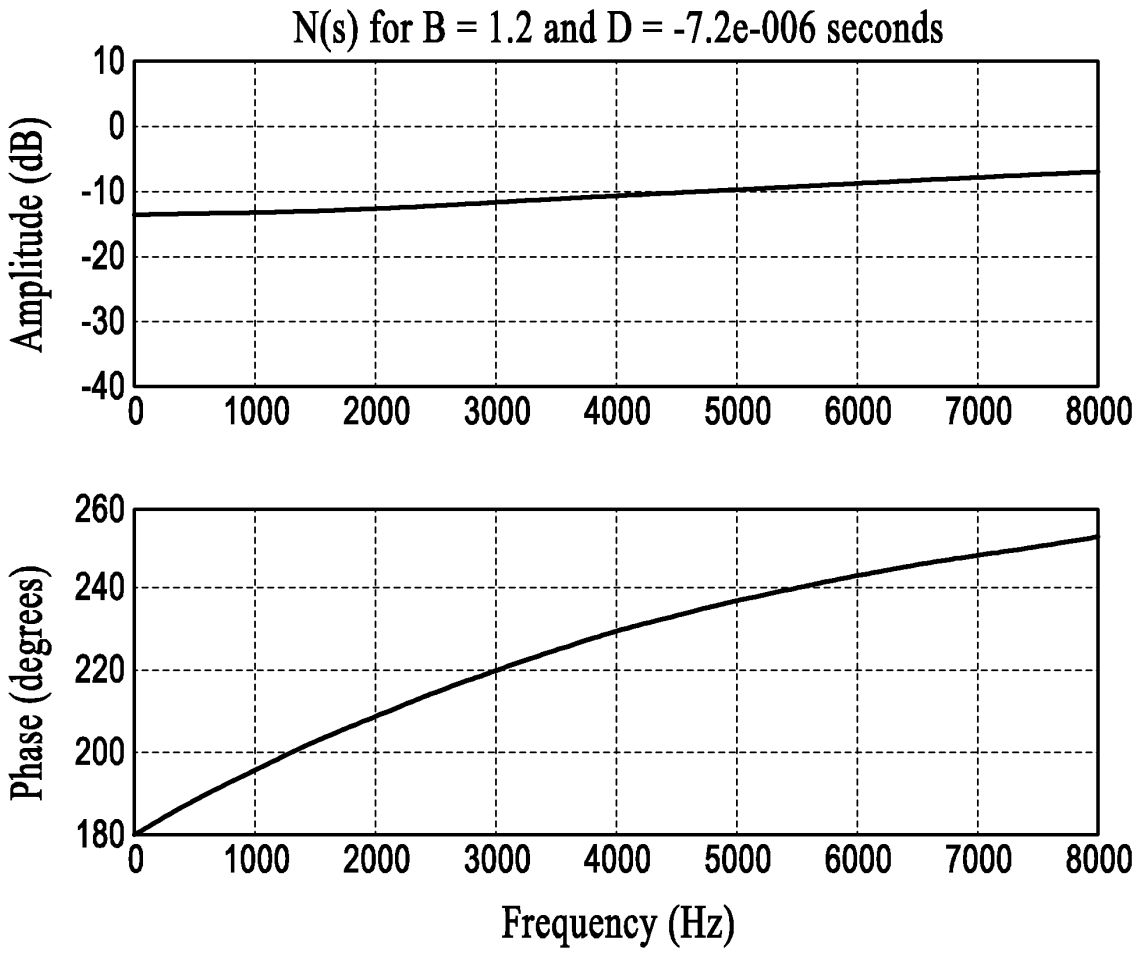
N(s) for B = 1.2 and D = -7.2e-006 seconds
Amplitude (dB)
10
0
-10
-20
-30
-40
0
1000
2000
3000
4000
5000
6000
7000
8000
Phase (degrees)
260
240
220
200
180
Frequency (Hz)

FIG.20

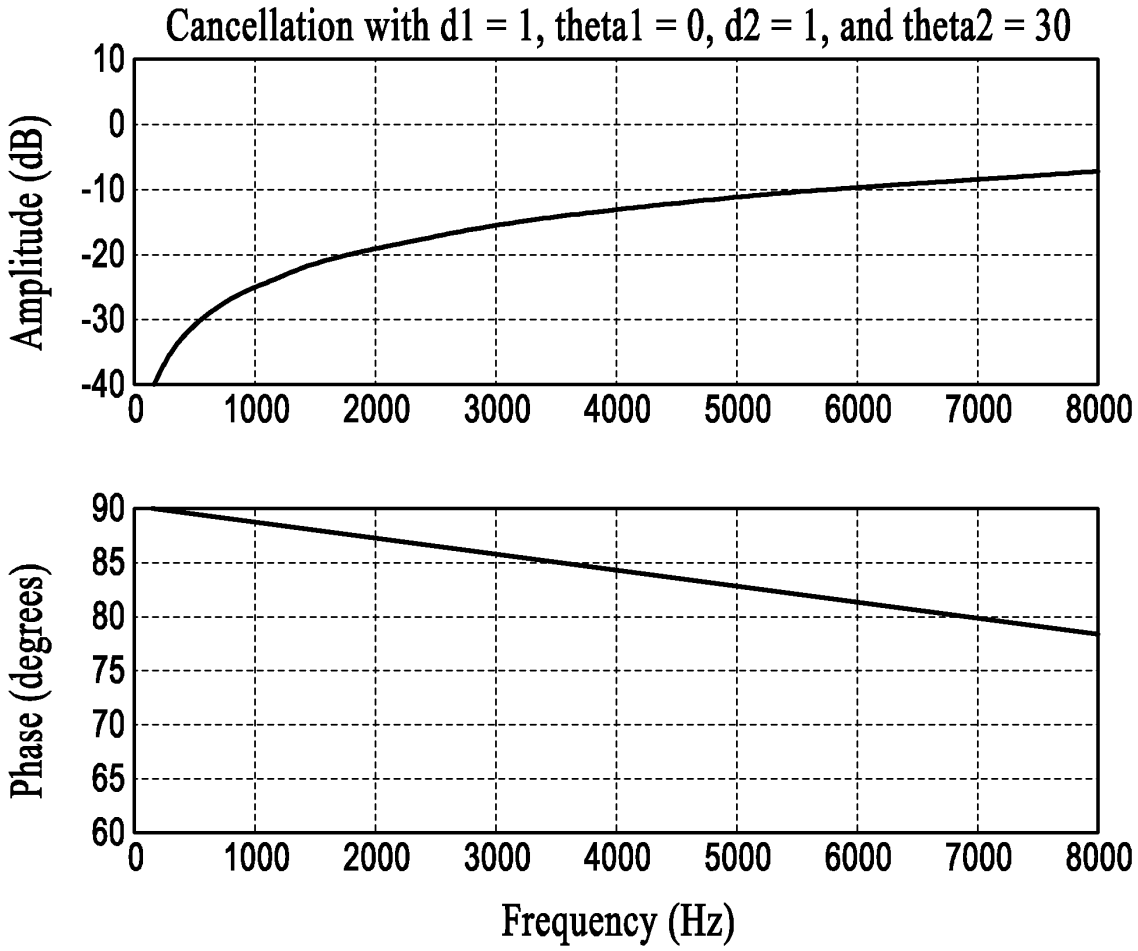
Cancellation with d1 = 1, theta1 = 0, d2 = 1, and theta2 = 30
Amplitude (dB)
10
0
-10
-20
-30
-40
0
1000
2000
3000
4000
5000
6000
7000
8000
Phase (degrees)
90
85
80
75
70
65
60
Frequency (Hz)

FIG.21

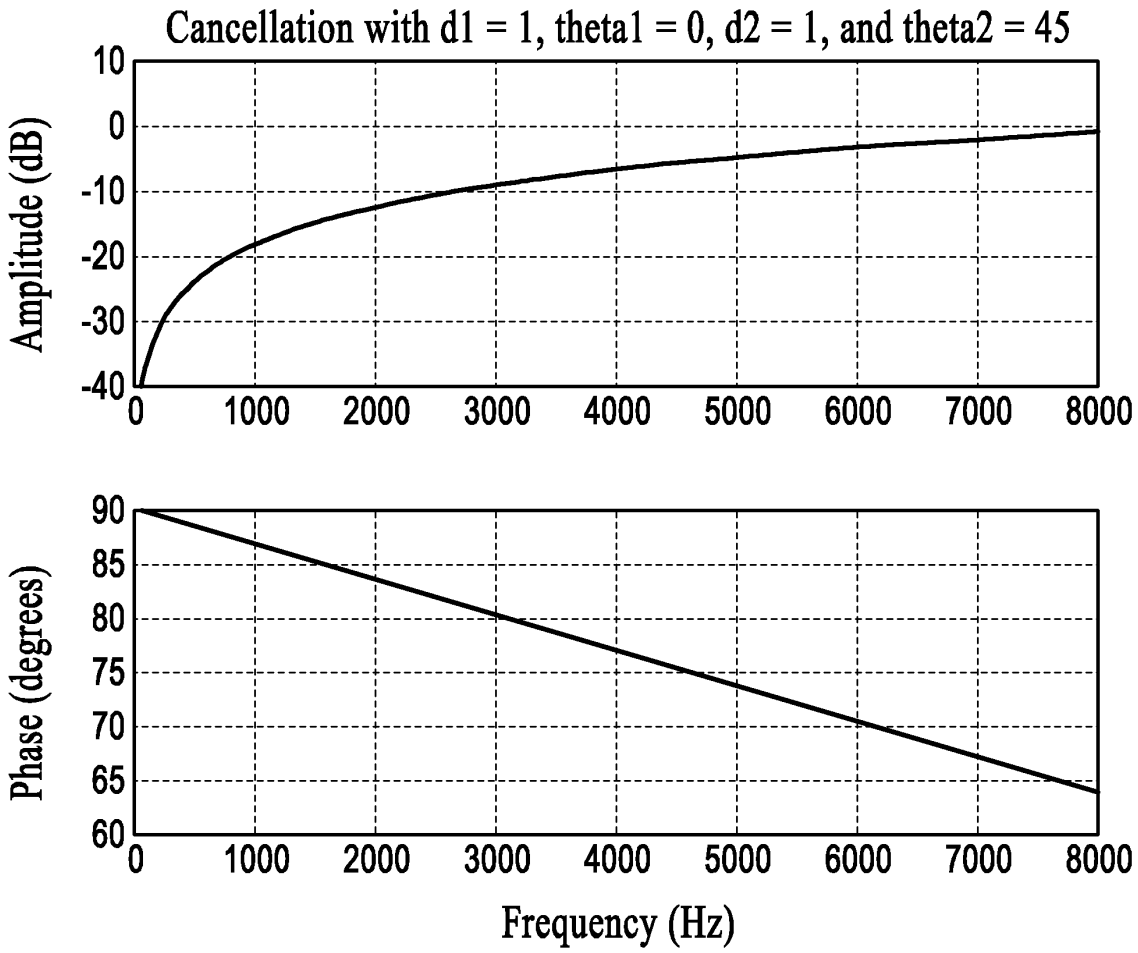
Cancellation with d1 = 1, theta1 = 0, d2 = 1, and theta2 = 45
Amplitude (dB)
10
0
-10
-20
-30
-40
0
1000
2000
3000
4000
5000
6000
7000
8000
Phase (degrees)
90
85
80
75
70
65
60
Frequency (Hz)

FIG.22

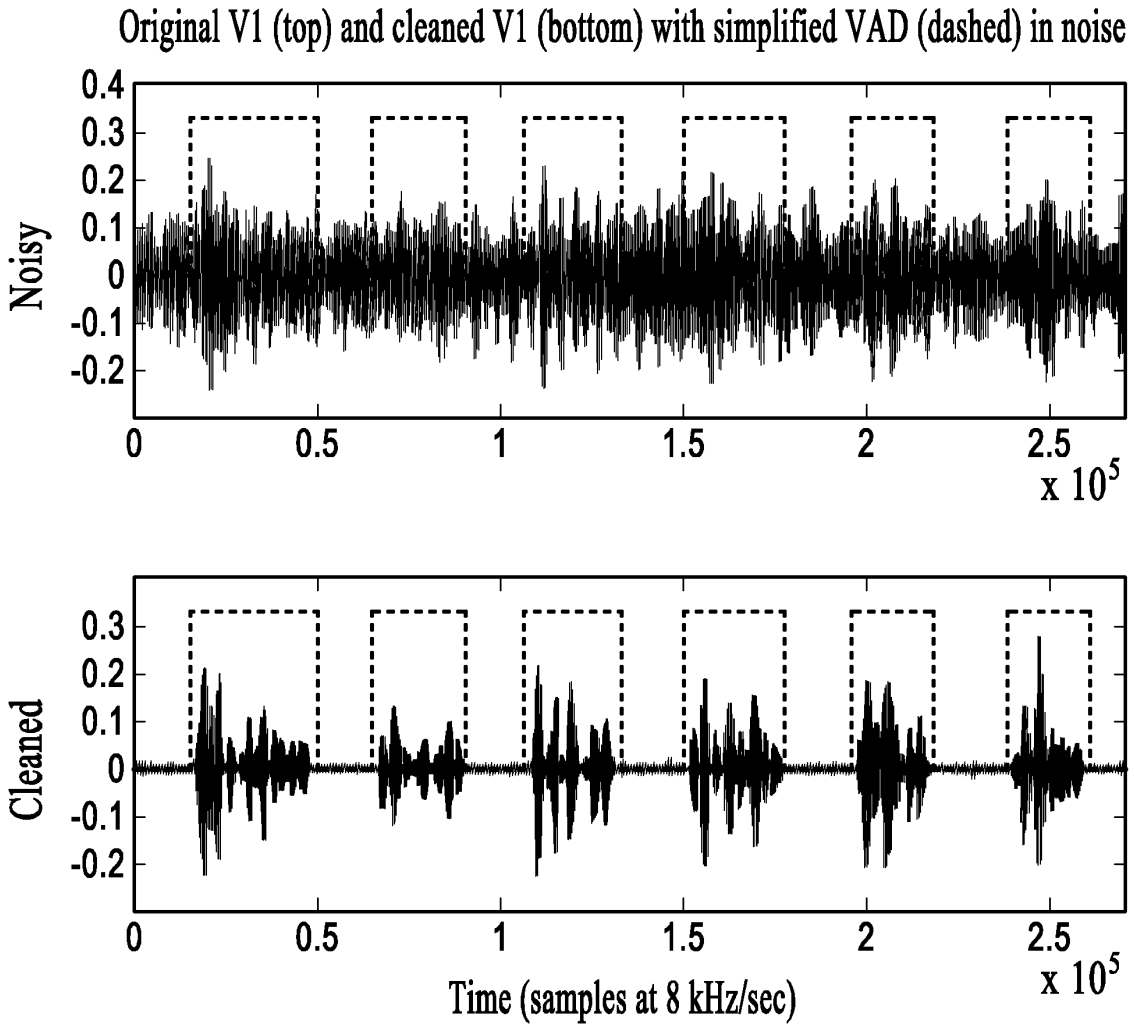
Original V1 (top) and cleaned V1 (bottom) with simplified VAD (dashed) in noise
Noisy
0.4
0.3
0.2
0.1
0
-0.1
-0.2
0
0.5
1
1.5
2
2.5
x 10^5
Cleaned
0.3
0.2
0.1
0
-0.1
-0.2
0
0.5
1
1.5
2
2.5
x 10^5
Time (samples at 8 kHz/sec)

FIG.23

Electronic Patent Application Fee Transmittal

Application Number:	12139333
Filing Date:	13-Jun-2008
Title of Invention:	Dual Omnidirectional Microphone Array (DOMA)
First Named Inventor/Applicant Name:	Gregory C. Burnett
Filer:	Richard L. Gregory/Jerry Donnard
Attorney Docket Number:	ALPH.P035

Filed as Large Entity

Utility under 35 USC 111(a) Filing Fees

Description	Fee Code	Quantity	Amount	Sub-Total in USD($)
Basic Filing:				
Pages:				
Claims:				
Miscellaneous-Filing:				
Late filing fee for oath or declaration	1051	1	130	130
Petition:				
Patent-Appeals-and-Interference:				
Post-Allowance-and-Post-Issuance:				
Extension-of-Time:				

Description	Fee Code	Quantity	Amount	Sub-Total in USD($)
Extension - 1 month with $0 paid	1251	1	120	120
Miscellaneous:				
			Total in USD ($)	**250**

Electronic Acknowledgement Receipt

EFS ID:	3946196
Application Number:	12139333
International Application Number:	
Confirmation Number:	1204
Title of Invention:	Dual Omnidirectional Microphone Array (DOMA)
First Named Inventor/Applicant Name:	Gregory C. Burnett
Customer Number:	53186
Filer:	Richard L. Gregory/Jerry Donnard
Filer Authorized By:	Richard L. Gregory
Attorney Docket Number:	ALPH.P035
Receipt Date:	15-SEP-2008
Filing Date:	13-JUN-2008
Time Stamp:	19:11:49
Application Type:	Utility under 35 USC 111(a)

Payment information:

Submitted with Payment	yes
Payment Type	Credit Card
Payment was successfully received in RAM	$250
RAM confirmation Number	4345
Deposit Account	
Authorized User	

File Listing:

Document Number	Document Description	File Name	File Size(Bytes)/ Message Digest	Multi Part /.zip	Pages (if appl.)

1		Missing_Parts_ALPHP035.pdf	534127 f05681d0560199e083098b50a2c18c4c1d3ce0cc	yes	8
	Multipart Description/PDF files in .zip description				
	Document Description		**Start**	**End**	
	Miscellaneous Incoming Letter		1	2	
	Oath or Declaration filed		3	4	
	Extension of Time		5	5	
	Preliminary Amendment		6	8	
Warnings:					
Information:					
2	Drawings-only black and white line drawings	Replacement_Drawings_ALPHP035.pdf	956077 902429392acdef055ed7265feb7141526e894d37	no	17
Warnings:					
Information:					
3	Fee Worksheet (PTO-06)	fee-info.pdf	31941 60412f9b2d6f4a7cec347570b1d729983226eab1	no	2
Warnings:					
Information:					
		Total Files Size (in bytes):	1522145		

This Acknowledgement Receipt evidences receipt on the noted date by the USPTO of the indicated documents, characterized by the applicant, and including page counts, where applicable. It serves as evidence of receipt similar to a Post Card, as described in MPEP 503.

<u>New Applications Under 35 U.S.C. 111</u>
If a new application is being filed and the application includes the necessary components for a filing date (see 37 CFR 1.53(b)-(d) and MPEP 506), a Filing Receipt (37 CFR 1.54) will be issued in due course and the date shown on this Acknowledgement Receipt will establish the filing date of the application.

<u>National Stage of an International Application under 35 U.S.C. 371</u>
If a timely submission to enter the national stage of an international application is compliant with the conditions of 35 U.S.C. 371 and other applicable requirements a Form PCT/DO/EO/903 indicating acceptance of the application as a national stage submission under 35 U.S.C. 371 will be issued in addition to the Filing Receipt, in due course.

<u>New International Application Filed with the USPTO as a Receiving Office</u>
If a new international application is being filed and the international application includes the necessary components for an international filing date (see PCT Article 11 and MPEP 1810), a Notification of the International Application Number and of the International Filing Date (Form PCT/RO/105) will be issued in due course, subject to prescriptions concerning national security, and the date shown on this Acknowledgement Receipt will establish the international filing date of the application.

Attorney Docket No. ALPH.P035 Patent

Transmittal of Documents

Certification Under 37 C.F.R. §1.8(a)

Transmitted via **September 15, 2008**
Date of Transmission

USPTO EFS

I hereby certify that this document, and any other accompanying documents referred to herein are being transmitted to the United States Patent Office via EFS in accordance with 37 C.F.R. §1.6(a)(4) on the date indicated above.

Jerry Donnard
(Print Name of Person Transmitting Documents)

(Signature of Person Transmitting Documents)

Response to Notice to File Missing Parts of Nonprovisional Application;
Declaration in Compliance with 37 CFR §1.36;
Petition for Extension of Time;
Submission of Preliminary Amendment;
Replacement Drawings – 17 Sheets;
Electronic payment of filing fees.

Atty. Docket No ALPH.P035

PATENT

IN THE UNITED STATES PATENT OFFICE

In Re Patent Application of:	)	Examiner: Not Yet Assigned
First Named Inventor: Gregory C. Burnett	)	Art Unit: 2615
Application No. 12/139,333	)	
Filed: June 13, 2008	)	
For: DUAL OMNIDIRECTIONAL MICROPHONE ARRAY (DOMA)	)	

Mail Stop Missing Parts
Commissioner for Patents
P.O. Box 1450
Alexandria, VA 22313-1450

RESPONSE TO NOTICE TO FILE MISSING PARTS OF NONPROVISIONAL APPLICATION

Sir:

In response to a Notice to File Missing Parts of Nonprovisional Application mailed June 27, 2008 in connection with the above-referenced patent application, Applicants submit herewith:

1. Declaration in compliance with 37 CFR § 1.36;
2. Petition for one month extension of time under 37 CFR § 1.136(a);
3. Electronic payment via credit card in the amount of $250.00 for the late declaration surcharge and one month extension of time fee;
4. Preliminary amendment, including replacement drawings (17 sheets).

Respectfully Submitted,
Courtney Stanford & Gregory & LLP

Date September 15, 2008

Richard L. Gregory, Jr.
Reg. No. 42,607

DECLARATION AND POWER OF ATTORNEY

(Docket No. ALPH.P035)

As a below-named inventor, I hereby declare that:

My residence, mailing address, and citizenship are as stated below next to my name.

I believe I am an original, first and joint inventor of the inventions described and claimed in the specification filed:

_____ HEREWITH,
__X__ on June 13, 2008, Application Number 12/139,333,
and entitled:

DUAL OMNIDIRECTIONAL MICROPHONE ARRAY (DOMA)

I hereby state that I have reviewed and understand the contents of the above-identified specification, including the claims, as amended by any amendment specifically referred to herein.

I acknowledge the duty to disclose information which is material to patentability as defined in 37 CFR 1.56, including for continuation-in-part applications, material information which became available between the filing date of the prior application and the national or PCT international filing date of the continuation-in-part application.

The undersigned hereby grants the USPTO authority to provide the European Patent Office (EPO), the Japan Patent Office (JPO), and any other intellectual property offices in which a foreign application claiming priority to the above-identified application is filed access to the above-identified patent application. See 37 CFR 1.14(c) and (h).

In accordance with 37 CFR 1.14(h)(3), access will be provided to a copy of the application-as-filed with respect to: 1) the above-identified application, 2) any foreign application to which the above-identified application claims priority under 35 USC 119(a)-(d) if a copy of the foreign application that satisfies the certified copy requirement of 37

CFR 1.55 has been filed in the above-identified US application, and 3) any U.S. application from which benefit is sought in the above-identified application.

In accordance with 37 CFR 1.14(c), access may be provided to information concerning the date of filing the Authorization to Permit Access to Application by Participating Offices.

I hereby declare that all statements made herein of my own knowledge are true and that all statements made on information and belief are believed to be true; and further that these statements were made with the knowledge that willful false statements and the like so made are punishable by fine or imprisonment, or both, under Section 1001 of Title 18 of the United States Code and that such willful false statements may jeopardize the validity of the application or any patent issued thereon.

I hereby appoint the **registered patent practitioners associated with Customer Number 53186** with full power of substitution and revocation, to prosecute this application and transact all business in the U.S. Patent and Trademark Office connected therewith. The current mailing address and telephone and facsimile numbers are:

P.O. Box 9686
San Jose, California 95157

Tel: (408) 342-1900
Fax: (408) 342-1909

Inventor:	Gregory C. Burnett		
Residence City:	Dodge Center	Residence State:	MN
Residence Country:	US	Citizenship:	US
Mailing Address	99 Rhode Island Street, 3rd Floor San Francisco, CA 94103 US		

Date: 9/5/08

Gregory C. Burnett

PTO/SB/22 (01-08)
Approved for use through 01/31/2008. OMB 0651-0031
U.S. Patent and Trademark Office; U.S. DEPARMENT OF COMMERCE
Under the paperwork Reduction Act of 1995, no persons are required to respond to a collection of information unless if displays a valid OMB control number.

PETITION FOR EXTENSION OF TIME UNDER 37 CFR 1.136(a) **FY 2008** *(Fees pursuant to the Consolidated Appropriations Act, 2005 (H.R. 4818).)*	Docket Number (Optional) ALPH.P035
Application Number 12/139,333	Filed June 13, 2008
For Dual Omnidirectional Microphone Array (DOMA)	
Art Unit 2615	Examiner

This is a request under the provisions of 37 CFR 1.136(a) to extend the period for filing a reply in the above identified application.

The requested extension and fee are as follows (check time period desired and enter the appropriate fee below):

		Fee	Small Entity Fee	
☑	One month (37 CFR 1.17(a)(1))	$120	$60	$ 120
☐	Two months (37 CFR 1.17(a)(2))	$460	$230	$
☐	Three months (37 CFR 1.17(a)(3))	$1050	$525	$
☐	Four months (37 CFR 1.17(a)(4))	$1640	$820	$
☐	Five months (37 CFR 1.17(a)(5))	$2230	$1115	$

☐ Applicant claims small entity status. See 37 CFR 1.27.

☐ A check in the amount of the fee is enclosed.

☑ Payment by credit card.

☐ The Director has already been authorized to charge fees in this application to a Deposit Account.

☐ The Director is hereby authorized to charge any fees which may be required, or credit any overpayment, to Deposit Account Number _____. I have enclosed a duplicate copy of this sheet.

WARNING: Information on this form may become public. Credit card information should not be included on this form. Provide credit card information and authorization on PTO-2038.

I am the

☐ applicant/inventor.

☐ assignee of record of the entire interest. See 37 CFR 3.71.
Statement under 37 CFR 3.73(b) is enclosed (Form PTO/SB/96).

☑ attorney or agent of record. Registration Number 42,607

☐ attorney or agent under 37 CFR 1.34.
Registration number if acting under 37 CFR 1.34 _____

Signature — September 15, 2008 (Date)

Richard L. Gregory, Jr. (Typed or printed name) — 408-342-1900 (Telephone Number)

NOTE: Signatures of all the inventors or assignees of record of the entire interest or their representative(s) are required. Submit multiple forms if more than one signature is required, see below.

☑ Total of 1 forms are submitted.

This collection of information is required by 37 CFR 1.136(a). The information is required to obtain or retain a benefit by the public which is to file (and by the USPTO to process) an application. Confidentiality is governed by 35 U.S.C. 122 and 37 CFR 1.11 and 1.14. This collection is estimated to take 6 minutes to complete, including gathering, preparing, and submitting the completed application form to the USPTO. Time will vary depending upon the individual case. Any comments on the amount of time you require to complete this form and/or suggestions for reducing this burden, should be sent to the Chief Information Officer, U.S. Patent and Trademark Office, U.S. Department of Commerce, P.O. Box 1450, Alexandria, VA 22313-1450. DO NOT SEND FEES OR COMPLETED FORMS TO THIS ADDRESS. **SEND TO: Commissioner for Patents, P.O. Box 1450, Alexandria, VA 22313-1450.**

If you need assistance in completing the form, call 1-800-PTO-9199 and select option 2

DocCode - SCORE

SCORE Placeholder Sheet for IFW Content

Application Number: 12139333 Document Date: 09/15/08

The presence of this form in the IFW record indicates that the following document type was received in paper and is scanned and stored in the SCORE database.

- Design Drawings

The original paper documents are in the physical artifact folder. The original documents are scanned using a higher quality capture process and stored in SCORE. A copy of these documents are scanned in IFW using the standard quality scanning process. Defects visible in both IFW and SCORE are indicative of defects in the original paper documents.

To access the documents in the SCORE database, refer to instructions developed by SIRA.

At the time of document entry (noted above):

- Examiners may access SCORE content via the eDAN interface.
- Other USPTO employees can bookmark the current SCORE URL (http://es/ScoreAccessWeb/).
- External customers may access SCORE content via the Public and Private PAIR interfaces.

Form Revision Date: October 12, 2006

UNITED STATES PATENT AND TRADEMARK OFFICE

UNITED STATES DEPARTMENT OF COMMERCE
United States Patent and Trademark Office
Address: COMMISSIONER FOR PATENTS
P.O. Box 1450
Alexandria, Virginia 22313-1450
www.uspto.gov

APPLICATION NUMBER	FILING or 371(c) DATE	GRP ART UNIT	FIL FEE REC'D	ATTY.DOCKET.NO	TOT CLAIMS	IND CLAIMS
12/139,333	06/13/2008	2615	3190	ALPH.P035	48	6

CONFIRMATION NO. 1204

UPDATED FILING RECEIPT

53186
COURTNEY STANIFORD & GREGORY LLP
P.O. BOX 9686
SAN JOSE, CA 95157

OC000000032214878

Date Mailed: 09/23/2008

Receipt is acknowledged of this non-provisional patent application. The application will be taken up for examination in due course. Applicant will be notified as to the results of the examination. Any correspondence concerning the application must include the following identification information: the U.S. APPLICATION NUMBER, FILING DATE, NAME OF APPLICANT, and TITLE OF INVENTION. Fees transmitted by check or draft are subject to collection. Please verify the accuracy of the data presented on this receipt. **If an error is noted on this Filing Receipt, please submit a written request for a Filing Receipt Correction. Please provide a copy of this Filing Receipt with the changes noted thereon. If you received a "Notice to File Missing Parts" for this application, please submit any corrections to this Filing Receipt with your reply to the Notice. When the USPTO processes the reply to the Notice, the USPTO will generate another Filing Receipt incorporating the requested corrections**

Applicant(s)

Gregory C. Burnett, Dodge Center, MN;

Power of Attorney: The patent practitioners associated with Customer Number 53186

Domestic Priority data as claimed by applicant

This appln claims benefit of 60/934,551 06/13/2007
and claims benefit of 60/953,444 08/01/2007
and claims benefit of 60/954,712 08/08/2007
and claims benefit of 61/045,377 04/16/2008

Foreign Applications

If Required, Foreign Filing License Granted: 06/25/2008

The country code and number of your priority application, to be used for filing abroad under the Paris Convention, is **US 12/139,333**

Projected Publication Date: 01/01/2009

Non-Publication Request: No

Early Publication Request: No

Title

Dual Omnidirectional Microphone Array (DOMA)

Preliminary Class

381

PROTECTING YOUR INVENTION OUTSIDE THE UNITED STATES

Since the rights granted by a U.S. patent extend only throughout the territory of the United States and have no effect in a foreign country, an inventor who wishes patent protection in another country must apply for a patent in a specific country or in regional patent offices. Applicants may wish to consider the filing of an international application under the Patent Cooperation Treaty (PCT). An international (PCT) application generally has the same effect as a regular national patent application in each PCT-member country. The PCT process **simplifies** the filing of patent applications on the same invention in member countries, but **does not result** in a grant of "an international patent" and does not eliminate the need of applicants to file additional documents and fees in countries where patent protection is desired.

Almost every country has its own patent law, and a person desiring a patent in a particular country must make an application for patent in that country in accordance with its particular laws. Since the laws of many countries differ in various respects from the patent law of the United States, applicants are advised to seek guidance from specific foreign countries to ensure that patent rights are not lost prematurely.

Applicants also are advised that in the case of inventions made in the United States, the Director of the USPTO must issue a license before applicants can apply for a patent in a foreign country. The filing of a U.S. patent application serves as a request for a foreign filing license. The application's filing receipt contains further information and guidance as to the status of applicant's license for foreign filing.

Applicants may wish to consult the USPTO booklet, "General Information Concerning Patents" (specifically, the section entitled "Treaties and Foreign Patents") for more information on timeframes and deadlines for filing foreign patent applications. The guide is available either by contacting the USPTO Contact Center at 800-786-9199, or it can be viewed on the USPTO website at http://www.uspto.gov/web/offices/pac/doc/general/index.html.

For information on preventing theft of your intellectual property (patents, trademarks and copyrights), you may wish to consult the U.S. Government website, http://www.stopfakes.gov. Part of a Department of Commerce initiative, this website includes self-help "toolkits" giving innovators guidance on how to protect intellectual property in specific countries such as China, Korea and Mexico. For questions regarding patent enforcement issues, applicants may call the U.S. Government hotline at 1-866-999-HALT (1-866-999-4158).

LICENSE FOR FOREIGN FILING UNDER

Title 35, United States Code, Section 184

Title 37, Code of Federal Regulations, 5.11 & 5.15

GRANTED

The applicant has been granted a license under 35 U.S.C. 184, if the phrase "IF REQUIRED, FOREIGN FILING LICENSE GRANTED" followed by a date appears on this form. Such licenses are issued in all applications where the conditions for issuance of a license have been met, regardless of whether or not a license may be required as

set forth in 37 CFR 5.15. The scope and limitations of this license are set forth in 37 CFR 5.15(a) unless an earlier license has been issued under 37 CFR 5.15(b). The license is subject to revocation upon written notification. The date indicated is the effective date of the license, unless an earlier license of similar scope has been granted under 37 CFR 5.13 or 5.14.

This license is to be retained by the licensee and may be used at any time on or after the effective date thereof unless it is revoked. This license is automatically transferred to any related applications(s) filed under 37 CFR 1.53(d). This license is not retroactive.

The grant of a license does not in any way lessen the responsibility of a licensee for the security of the subject matter as imposed by any Government contract or the provisions of existing laws relating to espionage and the national security or the export of technical data. Licensees should apprise themselves of current regulations especially with respect to certain countries, of other agencies, particularly the Office of Defense Trade Controls, Department of State (with respect to Arms, Munitions and Implements of War (22 CFR 121-128)); the Bureau of Industry and Security, Department of Commerce (15 CFR parts 730-774); the Office of Foreign AssetsControl, Department of Treasury (31 CFR Parts 500+) and the Department of Energy.

NOT GRANTED

No license under 35 U.S.C. 184 has been granted at this time, if the phrase "IF REQUIRED, FOREIGN FILING LICENSE GRANTED" DOES NOT appear on this form. Applicant may still petition for a license under 37 CFR 5.12, if a license is desired before the expiration of 6 months from the filing date of the application. If 6 months has lapsed from the filing date of this application and the licensee has not received any indication of a secrecy order under 35 U.S.C. 181, the licensee may foreign file the application pursuant to 37 CFR 5.15(b).

UNITED STATES PATENT AND TRADEMARK OFFICE

UNITED STATES DEPARTMENT OF COMMERCE
United States Patent and Trademark Office
Address: COMMISSIONER FOR PATENTS
P.O. Box 1450
Alexandria, Virginia 22313-1450
www.uspto.gov

APPLICATION NUMBER	FILING OR 371(C) DATE	FIRST NAMED APPLICANT	ATTY. DOCKET NO./TITLE
12/139,333	06/13/2008	Gregory C. Burnett	ALPH.P035

CONFIRMATION NO. 1204

53186
COURTNEY STANIFORD & GREGORY LLP
P.O. BOX 9686
SAN JOSE, CA 95157

PUBLICATION NOTICE

OC000000033876660

Title: Dual Omnidirectional Microphone Array (DOMA)

Publication No.US-2009-0003623-A1
Publication Date:01/01/2009

NOTICE OF PUBLICATION OF APPLICATION

The above-identified application will be electronically published as a patent application publication pursuant to 37 CFR 1.211, et seq. The patent application publication number and publication date are set forth above.

The publication may be accessed through the USPTO's publically available Searchable Databases via the Internet at www.uspto.gov. The direct link to access the publication is currently http://www.uspto.gov/patft/.

The publication process established by the Office does not provide for mailing a copy of the publication to applicant. A copy of the publication may be obtained from the Office upon payment of the appropriate fee set forth in 37 CFR 1.19(a)(1). Orders for copies of patent application publications are handled by the USPTO's Office of Public Records. The Office of Public Records can be reached by telephone at (703) 308-9726 or (800) 972-6382, by facsimile at (703) 305-8759, by mail addressed to the United States Patent and Trademark Office, Office of Public Records, Alexandria, VA 22313-1450 or via the Internet.

In addition, information on the status of the application, including the mailing date of Office actions and the dates of receipt of correspondence filed in the Office, may also be accessed via the Internet through the Patent Electronic Business Center at www.uspto.gov using the public side of the Patent Application Information and Retrieval (PAIR) system. The direct link to access this status information is currently http://pair.uspto.gov/. Prior to publication, such status information is confidential and may only be obtained by applicant using the private side of PAIR.

Further assistance in electronically accessing the publication, or about PAIR, is available by calling the Patent Electronic Business Center at 1-866-217-9197.

Office of Data Managment, Application Assistance Unit (571) 272-4000, or (571) 272-4200, or 1-888-786-0101

UNITED STATES PATENT AND TRADEMARK OFFICE

UNITED STATES DEPARTMENT OF COMMERCE
United States Patent and Trademark Office
Address: COMMISSIONER FOR PATENTS
P.O. Box 1450
Alexandria, Virginia 22313-1450
www.uspto.gov

APPLICATION NUMBER	PATENT NUMBER	GROUP ART UNIT	FILE WRAPPER LOCATION
12/139,333		2614	

OC000000046220512

Correspondence Address/Fee Address Change

The following fields have been set to Customer Number 98195 on 08/09/2010

- **Correspondence Address**
- **Maintenance Fee Address**
- **Power of Attorney Address**

The address of record for Customer Number 98195 is:

98195
Gregory & Martensen LLP
2018 Bissonnet Street
Houston, TX 77005

PART 1 - ATTORNEY/APPLICANT COPY
page 1 of 1

PLUS Search Results for S/N 12139333, Searched Fri Jul 01 14:44:11 EDT 2011

The Patent Linguistics Utility System (PLUS) is a USPTO automated search system for U.S. Patents from 1971 to the present PLUS is a query-by-example search system which produces a list of patents that are most closely related linguistically to the application searched. This search was prepared by the staff of the Scientific and Technical Information Center, SIRA.

7844059 86
20060210089 86
5473701 75
5590241 75
5729658 75
6070140 75
4453043 75
4564939 75
5835608 75
6094481 75
6389111 75
7533017 75
20070055511 75
6137887 75
7092882 75
20020069054 75
5432859 72
5572621 72
5285165 72
5426719 72
5937060 72
5970446 72
6182033 72
5774849 72
6108413 72
4287591 72
4379948 72
4998241 72
5568558 72
5644679 72
5732141 72
5790671 72
5825754 72
5864804 72
5905969 72
5907823 72
5999956 72
6078566 72
6157909 72
6263307 72
6269093 72
6285768 72
6360203 72
6377637 72
6430295 72
6480610 72
6505057 72
6516068 72
6563925 72
6570500 72

UNITED STATES PATENT AND TRADEMARK OFFICE

UNITED STATES DEPARTMENT OF COMMERCE
United States Patent and Trademark Office
Address: COMMISSIONER FOR PATENTS
P.O. Box 1450
Alexandria, Virginia 22313-1450
www.uspto.gov

APPLICATION NO.	FILING DATE	FIRST NAMED INVENTOR	ATTORNEY DOCKET NO.	CONFIRMATION NO.
12/139,333	06/13/2008	Gregory C. Burnett	ALPH.P035	1204

98195 7590 07/14/2011
Gregory & Martensen LLP
2018 Bissonnet Street
Houston, TX 77005

EXAMINER
WEISS, HOWARD

ART UNIT	PAPER NUMBER
2814	

NOTIFICATION DATE	DELIVERY MODE
07/14/2011	ELECTRONIC

Please find below and/or attached an Office communication concerning this application or proceeding.

The time period for reply, if any, is set in the attached communication.

Notice of the Office communication was sent electronically on above-indicated "Notification Date" to the following e-mail address(es):

rick@gregorymartensen.com
mike@gregorymartensen.com
vlad@gregorymartensen.com

PTOL-90A (Rev. 04/07)

Office Action Summary	Application No.	Applicant(s)	
	12/139,333	BURNETT, GREGORY C.	
	Examiner	Art Unit	
	HOWARD WEISS	2814	

-- The MAILING DATE of this communication appears on the cover sheet with the correspondence address --

Period for Reply

A SHORTENED STATUTORY PERIOD FOR REPLY IS SET TO EXPIRE 3 MONTH(S) OR THIRTY (30) DAYS, WHICHEVER IS LONGER, FROM THE MAILING DATE OF THIS COMMUNICATION.

- Extensions of time may be available under the provisions of 37 CFR 1.136(a). In no event, however, may a reply be timely filed after SIX (6) MONTHS from the mailing date of this communication.
- If NO period for reply is specified above, the maximum statutory period will apply and will expire SIX (6) MONTHS from the mailing date of this communication.
- Failure to reply within the set or extended period for reply will, by statute, cause the application to become ABANDONED (35 U.S.C. § 133). Any reply received by the Office later than three months after the mailing date of this communication, even if timely filed, may reduce any earned patent term adjustment. See 37 CFR 1.704(b).

Status

1)☒ Responsive to communication(s) filed on *13 June 2011*.

2a)☐ This action is **FINAL**. 2b)☒ This action is non-final.

3)☐ Since this application is in condition for allowance except for formal matters, prosecution as to the merits is closed in accordance with the practice under *Ex parte Quayle*, 1935 C.D. 11, 453 O.G. 213.

Disposition of Claims

4)☒ Claim(s) *1-48* is/are pending in the application.

4a) Of the above claim(s) _____ is/are withdrawn from consideration.

5)☐ Claim(s) _____ is/are allowed.

6)☒ Claim(s) *1-48* is/are rejected.

7)☐ Claim(s) _____ is/are objected to.

8)☐ Claim(s) _____ are subject to restriction and/or election requirement.

Application Papers

9)☒ The specification is objected to by the Examiner.

10)☒ The drawing(s) filed on *15 September 2008* is/are: a)☒ accepted or b)☐ objected to by the Examiner.

Applicant may not request that any objection to the drawing(s) be held in abeyance. See 37 CFR 1.85(a).

Replacement drawing sheet(s) including the correction is required if the drawing(s) is objected to. See 37 CFR 1.121(d).

11)☐ The oath or declaration is objected to by the Examiner. Note the attached Office Action or form PTO-152.

Priority under 35 U.S.C. § 119

12)☐ Acknowledgment is made of a claim for foreign priority under 35 U.S.C. § 119(a)-(d) or (f).

a)☐ All b)☐ Some * c)☐ None of:

1.☐ Certified copies of the priority documents have been received.

2.☐ Certified copies of the priority documents have been received in Application No. _____.

3.☐ Copies of the certified copies of the priority documents have been received in this National Stage application from the International Bureau (PCT Rule 17.2(a)).

* See the attached detailed Office action for a list of the certified copies not received.

Attachment(s)

1) ☒ Notice of References Cited (PTO-892)

2) ☐ Notice of Draftsperson's Patent Drawing Review (PTO-948)

3) ☐ Information Disclosure Statement(s) (PTO/SB/08) Paper No(s)/Mail Date _____.

4) ☐ Interview Summary (PTO-413) Paper No(s)/Mail Date. _____ .

5) ☐ Notice of Informal Patent Application

6) ☐ Other: _____.

Attorney's Docket Number: ALPH.P035

Filing Date: 6/13/2008

Continuing Data: claims benefit of 60/934,551 (6/13/2007), 60/953,444 (8/1/2007), 60/954,712 (8/8/2007) and 61/045,377 (4/16/2008)

Claimed Foreign Priority Date: none

Applicant(s): Burnett

Examiner: Howard Weiss

Specification

1. The title of the invention is not descriptive. A new title is required that is clearly indicative of the invention to which the claims are directed.

2. The disclosure is objected to because the following section is missing:
   Brief Summary of the Invention: See MPEP § 608.01(d). A brief summary or general statement of the invention as set forth in 37 CFR 1.73. The summary is separate and distinct from the abstract and is directed toward the invention rather than the disclosure as a whole. The summary may point out the advantages of the invention or how it solves problems previously existent in the prior art (and preferably indicated in the Background of the Invention). In chemical cases it should point out in general terms the utility of the invention. If possible, the nature and gist of the invention or the inventive concept should be set forth. Objects of the invention should be treated briefly and only to the extent that they contribute to an understanding of the invention.

   Appropriate correction is required.

Claim Rejections - 35 USC § 102

3. The following is a quotation of the appropriate paragraphs of 35 U.S.C. 102 that form the basis for the rejections under this section made in this Office action:

   A person shall be entitled to a patent unless –
   (b) the invention was patented or described in a printed publication in this or a foreign country or in public use or on sale in this country, more than one year prior to the date of application for patent in the United States.

4. Claims 1, 2, 21, 22 and 30 are rejected under 35 U.S.C. 102(b) as being anticipated by Cezanne et al. (U.S. Patent No. 5,473,701).

   Cezanne et al. shows all aspects of the instant invention (e.g. Figures 3 to 12) including:

   - a first virtual microphone $\mathbf{C_F}$ comprising a combination of a first signal from a first, delayed, unidirectional physical microphone **10** subtracted **45** from a second signal from a second omnidirectional physical microphone **12**
   - a second virtual microphone $\mathbf{C_B}$ comprising a combination of the first signal from a first, delayed, unidirectional physical microphone **10** subtracted **40** from a second signal from a second omnidirectional physical microphone **12**
   - first and second physical omnidirectional microphones positioned along an axis separated by a first distance **d** and a speech source **s(t)** located in a direction defined by an angle **θ** relative to the axis midpoint.

Claim Rejections - 35 USC § 103

5. The following is a quotation of 35 U.S.C. 103(a) which forms the basis for all obviousness rejections set forth in this Office action:

   (a) A patent may not be obtained though the invention is not identically disclosed or described as set forth in section 102 of this title, if the differences between the subject matter sought to be patented and the prior art are such that the subject matter as a whole would have been obvious at the time the invention was made to a person having ordinary skill in the art to which said subject matter pertains. Patentability shall not be negatived by the manner in which the invention was made.

6. Claims 3 to 20, 23 to 29 and 31 to 48 are rejected under 35 U.S.C. 103(a) as being unpatentable over Cezanne et al. and Fan (U.S. Patent No. 7,386,135).

   Cezanne et al. show most aspects of the instant invention (Paragraph 4) except for the first virtual microphone having a first linear response to speech that is devoid of a null and the second virtual microphone having a second linear response to speech with a single null oriented in a direction toward a source of the speech, wherein the speech is human speech. Fan et al teach (e.g. Figures 2a-c) to have a first virtual

microphone **204** having a first linear response to speech that is devoid of a null and the second virtual microphone **202** having a second linear response to speech with a single null oriented in a direction toward a source of the speech, wherein the speech is human speech to help eliminate the leakage of desired acoustics between the beams (Column 5 Lines 35 to 41). It would have been obvious to a person of ordinary skill in the art at the time of invention to have a first virtual microphone having a first linear response to speech that is devoid of a null and the second virtual microphone having a second linear response to speech with a single null oriented in a direction toward a source of the speech, wherein the speech is human speech as taught by Fan in the device of Cezanne et al. to help eliminate the leakage of desired acoustics between the beams.

Double Patenting

7. The nonstatutory double patenting rejection is based on a judicially created doctrine grounded in public policy (a policy reflected in the statute) so as to prevent the unjustified or improper timewise extension of the "right to exclude" granted by a patent and to prevent possible harassment by multiple assignees. A nonstatutory obviousness-type double patenting rejection is appropriate where the conflicting claims are not identical, but at least one examined application claim is not patentably distinct from the reference claim(s) because the examined application claim is either anticipated by, or would have been obvious over, the reference claim(s). See, e.g., *In re Berg*, 140 F.3d 1428, 46 USPQ2d 1226 (Fed. Cir. 1998); *In re Goodman*, 11 F.3d 1046, 29 USPQ2d 2010 (Fed. Cir. 1993); *In re Longi*, 759 F.2d 887, 225 USPQ 645 (Fed. Cir. 1985); *In re Van Ornum*, 686 F.2d 937, 214 USPQ 761 (CCPA 1982); *In re Vogel*, 422 F.2d 438, 164 USPQ 619 (CCPA 1970); and *In re Thorington*, 418 F.2d 528, 163 USPQ 644 (CCPA 1969).

   A timely filed terminal disclaimer in compliance with 37 CFR 1.321(c) or 1.321(d) may be used to overcome an actual or provisional rejection based on a nonstatutory double patenting ground provided the conflicting application or patent either is shown to be commonly owned with this application, or claims an invention made as a result of activities undertaken within the scope of a joint research agreement.

   Effective January 1, 1994, a registered attorney or agent of record may sign a terminal disclaimer. A terminal disclaimer signed by the assignee must fully comply with 37 CFR 3.73(b).

8. Claims 1 to 48 are provisionally rejected on the ground of nonstatutory obviousness-type double patenting as being unpatentable over claims 1 to 40 of copending Application No. 12/139,344. Although the conflicting claims are not identical, they are not patentably distinct from each other because both claim first and second virtual microphones each comprising a combination of first and second omnidirectional, physical microphones wherein the virtual microphones have the same response to noise but different response to speech where in one has a null orientated toward the speech source and the other is devoid of a null. Copending Application No. 12/139,344 also claims housing and loudspeaker which is an obvious application to one of ordinary skill in the art at the time of invention.

   This is a provisional obviousness-type double patenting rejection because the conflicting claims have not in fact been patented.

9. Claims 1 to 48 are provisionally rejected on the ground of nonstatutory obviousness-type double patenting as being unpatentable over claims 1 to 53 of copending Application No. 12/139,355 in view of McArthur et al. (U.S. Patent No. 6,473,733). Both the instant invention and copending Application No. 12/139,355 claim first and second virtual microphones each comprising a combination of first and second omnidirectional, physical microphones wherein the virtual microphones have the same response to noise but different response to speech where in one has a null orientated toward the speech source and the other is devoid of a null. Copending Application No. 12/139,355 further claims an adaptive noise removal application. McArthur et al. teach (e.g. Figure 1) the use of and adaptive noise removal application **10** to achieve noise suppression while preserving speech component among other advantages (Column 2 Lines 8 to 29). It would have been obvious to a person of ordinary skill in the art at the time of invention to include a adaptive noise suppression application to the instant invention to achieve noise suppression while preserving speech component among other advantages.

This is a provisional obviousness-type double patenting rejection.

Conclusion

10. Papers related to this application may be submitted directly to Art Unit 2814 by facsimile transmission. The faxing of such papers must conform with the notice published in the Official Gazette, 1096 OG 30 (15 November 1989). The Art Unit 2814 Fax Center number is **(571) 273-8300**. The Art Unit 2814 Fax Center is to be used only for papers related to Art Unit 2814 applications.

11. Any inquiry concerning this communication or earlier communications from the examiner should be directed to Howard Weiss at **(571) 272-1720** and between the hours of 7:00 AM to 3:00 PM (Eastern Standard Time) Monday through Friday or by e-mail via **Howard.Weiss@uspto.gov**. If attempts to reach the examiner by telephone are unsuccessful, the examiner's supervisor, Wael Fahmy, can be reached on **(571) 272-1705**.

12. Information regarding the status of an application may be obtained from the Patent Application Information Retrieval (PAIR) system. Status information for published applications may be obtained from either Private PAIR or Public PAIR. Status information for unpublished applications is available through Private PAIR only. For more information about the PAIR system, see http://pair-direct.uspto.gov. Should you have questions on access to the Private PAIR system, contact the Electronic Business Center (EBC) at **866-217-9197** (toll-free).

13. The following list is the Examiner's field of search for the present Office Action:

Field of Search	Date
U.S. Class / Subclass(es): 381/92, 94.7; 704/233, E21.004	7/7/2011
Other Documentation: PLUS Analysis Report	7/1/2011
Electronic Database(s): EAST	7/7/2011

HW/hw
11 July 2011

/Howard Weiss/
Primary Examiner
Art Unit 2814

Notice of References Cited	Application/Control No. 12/139,333	Applicant(s)/Patent Under Reexamination BURNETT, GREGORY C.	
	Examiner HOWARD WEISS	Art Unit 2814	Page 1 of 1

U.S. PATENT DOCUMENTS

*		Document Number Country Code-Number-Kind Code	Date MM-YYYY	Name	Classification
*	A	US-7,386,135	06-2008	Fan	381/92
*	B	US-5,473,701	12-1995	Cezanne et al.	381/92
	C	US-			
	D	US-			
	E	US-			
	F	US-			
	G	US-			
	H	US-			
	I	US-			
	J	US-			
	K	US-			
	L	US-			
	M	US-			

FOREIGN PATENT DOCUMENTS

*		Document Number Country Code-Number-Kind Code	Date MM-YYYY	Country	Name	Classification
	N					
	O					
	P					
	Q					
	R					
	S					
	T					

NON-PATENT DOCUMENTS

*		Include as applicable: Author, Title Date, Publisher, Edition or Volume, Pertinent Pages)
	U	
	V	
	W	
	X	

*A copy of this reference is not being furnished with this Office action. (See MPEP § 707.05(a).)
Dates in MM-YYYY format are publication dates. Classifications may be US or foreign.

Search Notes	Application/Control No.	Applicant(s)/Patent Under Reexamination
	12139333	BURNETT, GREGORY C.
	Examiner	**Art Unit**
	HOWARD WEISS	2814

SEARCHED

Class	Subclass	Date	Examiner
381	92, 94.7	7/7/2011	HW
704	233, E21.004	7/7/2011	HW

SEARCH NOTES

Search Notes	Date	Examiner
PLUS Analysis Report	7/1/2011	HW
EAST	7/7/2011	HW

INTERFERENCE SEARCH

Class	Subclass	Date	Examiner

Index of Claims	Application/Control No.	Applicant(s)/Patent Under Reexamination
	12139333	BURNETT, GREGORY C.
	Examiner	**Art Unit**
	HOWARD WEISS	2814

✓	Rejected	-	Cancelled	N	Non-Elected	A	Appeal
=	Allowed	÷	Restricted	I	Interference	O	Objected

☐ Claims renumbered in the same order as presented by applicant ☐ CPA ☐ T.D. ☐ R.1.47

CLAIM		DATE								
Final	Original	07/07/2011								
	1	✓								
	2	✓								
	3	✓								
	4	✓								
	5	✓								
	6	✓								
	7	✓								
	8	✓								
	9	✓								
	10	✓								
	11	✓								
	12	✓								
	13	✓								
	14	✓								
	15	✓								
	16	✓								
	17	✓								
	18	✓								
	19	✓								
	20	✓								
	21	✓								
	22	✓								
	23	✓								
	24	✓								
	25	✓								
	26	✓								
	27	✓								
	28	✓								
	29	✓								
	30	✓								
	31	✓								
	32	✓								
	33	✓								
	34	✓								
	35	✓								
	36	✓								

Index of Claims	Application/Control No.	Applicant(s)/Patent Under Reexamination
	12139333	BURNETT, GREGORY C.
	Examiner	**Art Unit**
	HOWARD WEISS	2814

✓	Rejected	-	Cancelled	N	Non-Elected	A	Appeal
=	Allowed	÷	Restricted	I	Interference	O	Objected

☐ Claims renumbered in the same order as presented by applicant ☐ CPA ☐ T.D. ☐ R.1.47

CLAIM		DATE								
Final	Original	07/07/2011								
	37	✓								
	38	✓								
	39	✓								
	40	✓								
	41	✓								
	42	✓								
	43	✓								
	44	✓								
	45	✓								
	46	✓								
	47	✓								
	48	✓								

Most frequently occurring classifications of patents returned
from a search Of 12/139,333 on Jul 01 , 2011

Original Classifications

5	704/233
2	381/66
2	381/92
2	381/94.7
2	704/227
2	704/203
2	704/226
2	704/228
2	704/270
2	370/288

Cross-Reference Classifications

7	704/226
7	704/E21.004
4	704/233
3	381/94.3
3	381/94.7
3	704/227
3	704/E15.039
3	704/228
3	381/71.1
3	381/107
3	379/406.08
3	370/289
2	381/94.1
2	704/203
2	704/225
2	381/71.11
2	370/286
2	704/214
2	704/201
2	704/251
2	375/285

Combined Classifications

9	704/226
9	704/233
7	704/E21.004
5	381/94.7
5	704/227
5	704/228
4	381/94.3
4	704/203
3	381/92
3	704/E15.039
3	704/270
3	381/71.1
3	381/107
3	704/225
3	381/71.11
3	370/286

3 379/406.08
3 370/289
2 381/66
2 381/94.1
2 379/406.14
2 370/288
2 379/406.05
2 704/246
2 704/214
2 379/406.13
2 370/290
2 704/201
2 704/251
2 708/322
2 375/285

Titles of most frequently occurring classifications of patents returned
from a search of 12/139,333 on Jul 01 , 2011

9 704/226 (2 OR, 7 XR)
Class 704 DATA PROCESSING: SPEECH SIGNAL PROCESSING, LINGUISTICS, LANGUAGE TRANSLATION, AND AUDIO COMPRESSION/DECOMPRESSION
704/200 .SPEECH SIGNAL PROCESSING
704/201 ..For storage or transmission
704/226 ...Noise

9 704/233 (5 OR, 4 XR)
Class 704 DATA PROCESSING: SPEECH SIGNAL PROCESSING, LINGUISTICS, LANGUAGE TRANSLATION, AND AUDIO COMPRESSION/DECOMPRESSION
704/200 .SPEECH SIGNAL PROCESSING
704/231 ..Recognition
704/233 ...Detect speech in noise

7 704/E21.004 (0 OR, 7 XR)
Class 704 DATA PROCESSING: SPEECH SIGNAL PROCESSING, LINGUISTICS, LANGUAGE TRANSLATION, AND AUDIO COMPRESSION/DECOMPRESSION
704/E21.001 .MODIFICATION OF AT LEAST ONE CHARACTERISTIC OF SPEECH WAVES (EPO)
704/E21.002 ..Speech enhancement, e.g., noise reduction, echo cancellation, etc. (EPO)
704/E21.003 ...Applications (EPO)
704/E21.004 ....Speech corrupted by noise (EPO)

5 381/94.7 (2 OR, 3 XR)
Class 381 ELECTRICAL AUDIO SIGNAL PROCESSING SYSTEMS AND DEVICES
381/94.1 .NOISE OR DISTORTION SUPPRESSION
381/94.7 ..Using signal channel and noise channel

5 704/227 (2 OR, 3 XR)
Class 704 DATA PROCESSING: SPEECH SIGNAL PROCESSING, LINGUISTICS, LANGUAGE TRANSLATION, AND AUDIO COMPRESSION/DECOMPRESSION
704/200 .SPEECH SIGNAL PROCESSING
704/201 ..For storage or transmission
704/226 ...Noise
704/227 ....Pretransmission

5 704/228 (2 OR, 3 XR)
Class 704 DATA PROCESSING: SPEECH SIGNAL PROCESSING, LINGUISTICS, LANGUAGE TRANSLATION, AND AUDIO COMPRESSION/DECOMPRESSION
704/200 .SPEECH SIGNAL PROCESSING
704/201 ..For storage or transmission
704/226 ...Noise
704/228 ....Post-transmission

4 381/94.3 (1 OR, 3 XR)
Class 381 ELECTRICAL AUDIO SIGNAL PROCESSING SYSTEMS AND DEVICES
381/94.1 .NOISE OR DISTORTION SUPPRESSION
381/94.2 ..Spectral adjustment
381/94.3 ...In multiple frequency bands

4 704/203 (2 OR, 2 XR)
Class 704 DATA PROCESSING: SPEECH SIGNAL PROCESSING, LINGUISTICS, LANGUAGE TRANSLATION, AND AUDIO COMPRESSION/DECOMPRESSION

704/200 .SPEECH SIGNAL PROCESSING
704/201 ..For storage or transmission
704/203 ...Transformation

3 381/92 (2 OR, 1 XR)
Class 381 ELECTRICAL AUDIO SIGNAL PROCESSING SYSTEMS AND DEVICES
381/92 .DIRECTIVE CIRCUITS FOR MICROPHONES

3 704/E15.039 (0 OR, 3 XR)
Class 704 DATA PROCESSING: SPEECH SIGNAL PROCESSING, LINGUISTICS, LANGUAGE TRANSLATION, AND AUDIO COMPRESSION/DECOMPRESSION
704/E15.001 .SPEECH RECOGNITION (EPO)
704/E15.039 ..Speech recognition techniques for robustness in adverse environments, e.g., in noise, of stress induced speech, etc. (EPO)

3 704/270 (2 OR, 1 XR)
Class 704 DATA PROCESSING: SPEECH SIGNAL PROCESSING, LINGUISTICS, LANGUAGE TRANSLATION, AND AUDIO COMPRESSION/DECOMPRESSION
704/200 .SPEECH SIGNAL PROCESSING
704/270 ..Application

3 381/71.1 (0 OR, 3 XR)
Class 381 ELECTRICAL AUDIO SIGNAL PROCESSING SYSTEMS AND DEVICES
381/71.1 .ACOUSTICAL NOISE OR SOUND CANCELLATION

3 381/107 (0 OR, 3 XR)
Class 381 ELECTRICAL AUDIO SIGNAL PROCESSING SYSTEMS AND DEVICES
381/104 .INCLUDING AMPLITUDE OR VOLUME CONTROL
381/107 ..Automatic

3 704/225 (1 OR, 2 XR)
Class 704 DATA PROCESSING: SPEECH SIGNAL PROCESSING, LINGUISTICS, LANGUAGE TRANSLATION, AND AUDIO COMPRESSION/DECOMPRESSION
704/200 .SPEECH SIGNAL PROCESSING
704/201 ..For storage or transmission
704/225 ...Gain control

3 381/71.11 (1 OR, 2 XR)
Class 381 ELECTRICAL AUDIO SIGNAL PROCESSING SYSTEMS AND DEVICES
381/71.1 .ACOUSTICAL NOISE OR SOUND CANCELLATION
381/71.8 ..Counterwave generation control path
381/71.11 ...Adaptive filter topology

3 370/286 (1 OR, 2 XR)
Class 370 MULTIPLEX COMMUNICATIONS
370/276 .DUPLEX
370/282 ..Transmit/receive interaction control
370/286 ...Echo suppression or cancellation

3 379/406.08 (0 OR, 3 XR)
Class 379 TELEPHONIC COMMUNICATIONS
379/406.01 .ECHO CANCELLATION OR SUPPRESSION
379/406.06 ..Using digital signal processing
379/406.08 ...Adaptive filtering

3 370/289 (0 OR, 3 XR)

Class 370 MULTIPLEX COMMUNICATIONS
370/276 .DUPLEX
370/282 ..Transmit/receive interaction control
370/286 ...Echo suppression or cancellation
370/289 ....Having residual echo cancellation or suppression

2 381/66 (2 OR, 0 XR)
Class 381 ELECTRICAL AUDIO SIGNAL PROCESSING SYSTEMS AND DEVICES
381/66 .DEREVERBERATORS

2 381/94.1 (0 OR, 2 XR)
Class 381 ELECTRICAL AUDIO SIGNAL PROCESSING SYSTEMS AND DEVICES
381/94.1 .NOISE OR DISTORTION SUPPRESSION

2 379/406.14 (1 OR, 1 XR)
Class 379 TELEPHONIC COMMUNICATIONS
379/406.01 .ECHO CANCELLATION OR SUPPRESSION
379/406.06 ..Using digital signal processing
379/406.12 ...Frequency domain analysis
379/406.14 ....Sub-band analysis

2 370/288 (2 OR, 0 XR)
Class 370 MULTIPLEX COMMUNICATIONS
370/276 .DUPLEX
370/282 ..Transmit/receive interaction control
370/286 ...Echo suppression or cancellation
370/288 ....Using an attenuator

2 379/406.05 (1 OR, 1 XR)
Class 379 TELEPHONIC COMMUNICATIONS
379/406.01 .ECHO CANCELLATION OR SUPPRESSION
379/406.05 ..Residual echo cancellation

2 704/246 (1 OR, 1 XR)
Class 704 DATA PROCESSING: SPEECH SIGNAL PROCESSING, LINGUISTICS, LANGUAGE TRANSLATION, AND AUDIO COMPRESSION/DECOMPRESSION
704/200 .SPEECH SIGNAL PROCESSING
704/231 ..Recognition
704/246 ...Voice recognition

2 704/214 (0 OR, 2 XR)
Class 704 DATA PROCESSING: SPEECH SIGNAL PROCESSING, LINGUISTICS, LANGUAGE TRANSLATION, AND AUDIO COMPRESSION/DECOMPRESSION
704/200 .SPEECH SIGNAL PROCESSING
704/201 ..For storage or transmission
704/211 ...Time
704/214 ....Voiced or unvoiced

2 379/406.13 (1 OR, 1 XR)
Class 379 TELEPHONIC COMMUNICATIONS
379/406.01 .ECHO CANCELLATION OR SUPPRESSION
379/406.06 ..Using digital signal processing
379/406.12 ...Frequency domain analysis
379/406.13 ....Fourier analysis

2 370/290 (1 OR, 1 XR)

Class 370 MULTIPLEX COMMUNICATIONS
370/276 .DUPLEX
370/282 ..Transmit/receive interaction control
370/286 ...Echo suppression or cancellation
370/290 ....Using a particular adaptive filter

2 704/201 (0 OR, 2 XR)
Class 704 DATA PROCESSING: SPEECH SIGNAL PROCESSING, LINGUISTICS, LANGUAGE TRANSLATION, AND AUDIO COMPRESSION/DECOMPRESSION
704/200 .SPEECH SIGNAL PROCESSING
704/201 ..For storage or transmission

2 704/251 (0 OR, 2 XR)
Class 704 DATA PROCESSING: SPEECH SIGNAL PROCESSING, LINGUISTICS, LANGUAGE TRANSLATION, AND AUDIO COMPRESSION/DECOMPRESSION
704/200 .SPEECH SIGNAL PROCESSING
704/231 ..Recognition
704/251 ...Word recognition

2 708/322 (1 OR, 1 XR)
Class 708 ELECTRICAL COMPUTERS: ARITHMETIC PROCESSING AND CALCULATING
708/100 .ELECTRICAL DIGITAL CALCULATING COMPUTER
708/200 ..Particular function performed
708/300 ...Filtering
708/322 ....Adaptive

2 375/285 (0 OR, 2 XR)
Class 375 PULSE OR DIGITAL COMMUNICATIONS
375/259 .SYSTEMS USING ALTERNATING OR PULSATING CURRENT
375/285 ..Antinoise or distortion

EAST Search History

EAST Search History (Prior Art)

Ref #	Hits	Search Query	DBs	Default Operator	Plurals	Time Stamp
S1	10	(("5687243") or ("4811404") or ("5406622") or ("5463694") or ("7246058")).PN.	US-PGPUB; USPAT; USOCR; FPRS; EPO; JPO; DERWENT; IBM_TDB	OR	OFF	2011/07/01 14:05
S2	0	boll-steven.in. and (acoustic adj noise)	US-PGPUB; USPAT; USOCR; FPRS; EPO; JPO; DERWENT; IBM_TDB	OR	OFF	2011/07/01 14:11
S3	2	boll.in. and (acoustic adj noise)	US-PGPUB; USPAT; USOCR; FPRS; EPO; JPO; DERWENT; IBM_TDB	OR	OFF	2011/07/01 14:11
S4	2	("7433484").PN.	US-PGPUB; USPAT; USOCR; FPRS; EPO; JPO; DERWENT; IBM_TDB	OR	OFF	2011/07/05 08:07
S5	10	(US-20060210089-$).did. or (US-7844059-$ or US-5473701-$ or US-5590241-$ or US-5729658-$ or US-6070140-$ or US-4453043-$ or US-4564939-$ or US-5835608-$ or US-6094481-$).did.	US-PGPUB; USPAT	OR	OFF	2011/07/05 08:56

S6	40	(US-20070055511-$ or US-20020069054-$).did. or (US-6389111-$ or US-7533017-$ or US-6137887-$ or US-7092882-$ or US-5432859-$ or US-5572621-$ or US-5285165-$ or US-5426719-$ or US-5937060-$ or US-5970446-$ or US-6182033-$ or US-5774849-$ or US-6108413-$ or US-4287591-$ or US-4379948-$ or US-4998241-$ or US-5568558-$ or US-5644679-$ or US-5732141-$ or US-5790671-$ or US-5825754-$ or US-5864804-$ or US-5905969-$ or US-5907823-$ or US-5999956-$ or US-6078566-$).did. or (US-6157909-$ or US-6263307-$ or US-6269093-$ or US-6285768-$ or US-6360203-$ or US-6377637-$ or US-6430295-$ or US-6480610-$ or US-6505057-$ or US-6516068-$ or US-6563925-$ or US-6570500-$).did.	US-PGPUB; USPAT	OR	OFF	2011/07/05 11:32
S7	2021	(704/233,E21.004).CCLS.	US-PGPUB; USPAT; USOCR; FPRS; EPO; JPO; DERWENT; IBM_TDB	OR	OFF	2011/07/05 12:39
S8	116	S7 and (first adj2 microphone)	US-PGPUB; USPAT; USOCR; FPRS; EPO; JPO; DERWENT; IBM_TDB	OR	OFF	2011/07/05 12:40

S9	14	S7 and (omnidirectional adj2 microphone)	US-PGPUB; USPAT; USOCR; FPRS; EPO; JPO; DERWENT; IBM_TDB	OR	OFF	2011/07/05 13:10
S10	4	S9 not S8	US-PGPUB; USPAT; USOCR; FPRS; EPO; JPO; DERWENT; IBM_TDB	OR	OFF	2011/07/05 13:10
S11	215	(381/94.7).CCLS.	US-PGPUB; USPAT; USOCR; FPRS; EPO; JPO; DERWENT; IBM_TDB	OR	OFF	2011/07/05 13:12
S12	8	S11 and (omnidirectional adj2 microphone)	US-PGPUB; USPAT; USOCR; FPRS; EPO; JPO; DERWENT; IBM_TDB	OR	OFF	2011/07/05 13:13
S13	1001	(381/92).CCLS.	US-PGPUB; USPAT; USOCR; FPRS; EPO; JPO; DERWENT; IBM_TDB	OR	OFF	2011/07/05 13:18
S14	110	S13 and (omnidirectional adj2 microphone)	US-PGPUB; USPAT; USOCR; FPRS; EPO; JPO; DERWENT; IBM_TDB	OR	OFF	2011/07/05 13:18
S15	105	S14 not S8	US-PGPUB; USPAT; USOCR; FPRS; EPO; JPO; DERWENT; IBM_TDB	OR	OFF	2011/07/05 13:18
S16	105	S14 not (S8 or S9)	US-PGPUB; USPAT; USOCR; FPRS; EPO; JPO; DERWENT; IBM_TDB	OR	OFF	2011/07/05 13:18

S17	57	(S7 or S11 or S13) and (virtual adj2 microphone)	US-PGPUB; USPAT; USOCR; FPRS; EPO; JPO; DERWENT; IBM_TDB	OR	OFF	2011/07/05 13:43
S18	35	("20020039425" | "3789166" | "4006318" | "4591668" | "4653102" | "4777649" | "4901354" | "5097515" | "5212764" | "5400409" | "5406622" | "5414776" | "5473702" | "5515865" | "5517435" | "5539859" | "5590241" | "5633935" | "5649055" | "5664052" | "5684460" | "5729694" | "5754665" | "5835608" | "5853005" | "5917921" | "5966090" | "5986600" | "6006175" | "6009396" | "6069963" | "6191724" | "6233551" | "6266422" | "6430295"). PN.	US-PGPUB; USPAT; USOCR	OR	OFF	2011/07/05 13:51
S19	6	("4485484" | "4536887" | "4653102" | "4802227" | "4956867" | "5267320"). PN.	US-PGPUB; USPAT; USOCR	OR	OFF	2011/07/06 12:28
S20	47	("5473701").URPN.	USPAT	OR	OFF	2011/07/06 12:30
S21	6	("20080170715" | "20080170716" | "5574824" | "6449593" | "6751325" | "6937980"). PN.	US-PGPUB; USPAT; USOCR	OR	OFF	2011/07/06 12:44
S22	132	ADAPTIVE ADJ NOISE adj SUPPRESSION	US-PGPUB; USPAT; USOCR; FPRS; EPO; JPO; DERWENT; IBM_TDB	OR	OFF	2011/07/07 08:28
S23	103	S22 and @ad<"20070613"	US-PGPUB; USPAT; USOCR; FPRS; EPO; JPO; DERWENT; IBM_TDB	OR	OFF	2011/07/07 08:28

EAST Search History (Interference)

<This search history is empty>

7/7/2011 1:11:23 PM
C:\Documents and Settings\HWeiss\My Documents\EAST\Workspaces\12139333.wsp

PTO/SB/80 (11-08)
Approved for use through 11/30/2011. OMB 0651-0035
U.S. Patent and Trademark Office; U.S. DEPARTMENT OF COMMERCE
Under the Paperwork Reduction Act of 1995, no persons are required to respond to a collection of information unless it displays a valid OMB control number.

POWER OF ATTORNEY TO PROSECUTE APPLICATIONS BEFORE THE USPTO

I hereby revoke all previous powers of attorney given in the application identified in the attached statement under 37 CFR 3.73(b).

I hereby appoint:

☑ Practitioners associated with the Customer Number: 15516

OR

☐ Practitioner(s) named below (if more than ten patent practitioners are to be named, then a customer number must be used):

Name	Registration Number	Name	Registration Number

as attorney(s) or agent(s) to represent the undersigned before the United States Patent and Trademark Office (USPTO) in connection with any and all patent applications assigned only to the undersigned according to the USPTO assignment records or assignment documents attached to this form in accordance with 37 CFR 3.73(b).

Please change the correspondence address for the application identified in the attached statement under 37 CFR 3.73(b) to:

☑ The address associated with Customer Number: 15516

OR

☐ Firm or Individual Name			
Address			
City		State	Zip
Country			
Telephone		Email	

Assignee Name and Address:

AliphCom, Inc.
410 Jessie Street, Unit 601
San Francisco, CA 94103

A copy of this form, together with a statement under 37 CFR 3.73(b) (Form PTO/SB/96 or equivalent) is required to be filed in each application in which this form is used. The statement under 37 CFR 3.73(b) may be completed by one of the practitioners appointed in this form if the appointed practitioner is authorized to act on behalf of the assignee, and must identify the application in which this Power of Attorney is to be filed.

SIGNATURE of Assignee of Record

The individual whose signature and title is supplied below is authorized to act on behalf of the assignee.

Signature		Date	11-21-2011
Name	Michael Edward Smith Luna	Telephone	(877) 254-7426
Title	Chief Technology Officer, AliphCom, Inc.		

This collection of information is required by 37 CFR 1.31, 1.32 and 1.33. The information is required to obtain or retain a benefit by the public which is to file (and by the USPTO to process) an application. Confidentiality is governed by 35 U.S.C. 122 and 37 CFR 1.11 and 1.14. This collection is estimated to take 3 minutes to complete, including gathering, preparing, and submitting the completed application form to the USPTO. Time will vary depending upon the individual case. Any comments on the amount of time you require to complete this form and/or suggestions for reducing this burden, should be sent to the Chief Information Officer, U.S. Patent and Trademark Office, U.S. Department of Commerce, P.O. Box 1450, Alexandria, VA 22313-1450. DO NOT SEND FEES OR COMPLETED FORMS TO THIS ADDRESS. **SEND TO: Commissioner for Patents, P.O. Box 1450, Alexandria, VA 22313-1450.**

If you need assistance in completing the form, call 1-800-PTO-9199 and select option 2.

PTO/SB/96 (07-09)
Approved for use through 07/31/2012. OMB 0651-0031
U.S. Patent and Trademark Office; U.S. DEPARTMENT OF COMMERCE
Under the Paperwork Reduction Act of 1995, no persons are required to respond to a collection of information unless it displays a valid OMB control number.

STATEMENT UNDER 37 CFR 3.73(b)

Applicant/Patent Owner: Gregory C. Burnett

Application No./Patent No.: 12/139,333 Filed/Issue Date: June 13, 2008

Titled: DUAL OMNIDIRECTIONAL MICROPHONE ARRAY (DOMA)

AliphCom, Inc., a Corporation
(Name of Assignee) (Type of Assignee, e.g., corporation, partnership, university, government agency, etc.)

states that it is:

1. [X] the assignee of the entire right, title, and interest in;

2. [ ] an assignee of less than the entire right, title, and interest in (The extent (by percentage) of its ownership interest is _____ %); or

3. [ ] the assignee of an undivided interest in the entirety of (a complete assignment from one of the joint inventors was made)

the patent application/patent identified above, by virtue of either:

A. [X] An assignment from the inventor(s) of the patent application/patent identified above. The assignment was recorded in the United States Patent and Trademark Office at Reel 021532, Frame 0602, or for which a copy therefore is attached.

OR

B. [ ] A chain of title from the inventor(s), of the patent application/patent identified above, to the current assignee as follows:

1. From: _____ To: _____
The document was recorded in the United States Patent and Trademark Office at
Reel _____, Frame _____, or for which a copy thereof is attached.

2. From: _____ To: _____
The document was recorded in the United States Patent and Trademark Office at
Reel _____, Frame _____, or for which a copy thereof is attached.

3. From: _____ To: _____
The document was recorded in the United States Patent and Trademark Office at
Reel _____, Frame _____, or for which a copy thereof is attached.

[ ] Additional documents in the chain of title are listed on a supplemental sheet(s).

[X] As required by 37 CFR 3.73(b)(1)(i), the documentary evidence of the chain of title from the original owner to the assignee was, or concurrently is being, submitted for recordation pursuant to 37 CFR 3.11.

[NOTE: A separate copy (*i.e.*, a true copy of the original assignment document(s)) must be submitted to Assignment Division in accordance with 37 CFR Part 3, to record the assignment in the records of the USPTO. See MPEP 302.08]

The undersigned (whose title is supplied below) is authorized to act on behalf of the assignee.

Signature	November 29, 2011 Date
Scott S. Kokka Printed or Typed Name	Attorney of Record Title

This collection of information is required by 37 CFR 3.73(b). The information is required to obtain or retain a benefit by the public which is to file (and by the USPTO to process) an application. Confidentiality is governed by 35 U.S.C. 122 and 37 CFR 1.11 and 1.14. This collection is estimated to take 12 minutes to complete, including gathering, preparing, and submitting the completed application form to the USPTO. Time will vary depending upon the individual case. Any comments on the amount of time you require to complete this form and/or suggestions for reducing this burden, should be sent to the Chief Information Officer, U.S. Patent and Trademark Office, U.S. Department of Commerce, P.O. Box 1450, Alexandria, VA 22313-1450. DO NOT SEND FEES OR COMPLETED FORMS TO THIS ADDRESS. **SEND TO: Commissioner for Patents, P.O. Box 1450, Alexandria, VA 22313-1450.**

If you need assistance in completing the form, call 1-800-PTO-9199 and select option 2.

Electronic Acknowledgement Receipt	
EFS ID:	11504301
Application Number:	12139333
International Application Number:	
Confirmation Number:	1204
Title of Invention:	Dual Omnidirectional Microphone Array (DOMA)
First Named Inventor/Applicant Name:	Gregory C. Burnett
Customer Number:	98195
Filer:	Scott Susumu Kokka
Filer Authorized By:	
Attorney Docket Number:	ALPH.P035
Receipt Date:	29-NOV-2011
Filing Date:	13-JUN-2008
Time Stamp:	21:26:48
Application Type:	Utility under 35 USC 111(a)

Payment information:

Submitted with Payment	no

File Listing:

Document Number	Document Description	File Name	File Size(Bytes)/ Message Digest	Multi Part /.zip	Pages (if appl.)
1		ALI-050A_POA_and_Stmt_373b_asfiled.pdf	418426 57f6d4f26056163b27cea99d8efc5e95a57f74f9	yes	2

	Multipart Description/PDF files in .zip description		
	Document Description	**Start**	**End**
	Power of Attorney	1	1
	Assignee showing of ownership per 37 CFR 3.73(b).	2	2
Warnings:			
Information:			
	Total Files Size (in bytes):	418426	

This Acknowledgement Receipt evidences receipt on the noted date by the USPTO of the indicated documents, characterized by the applicant, and including page counts, where applicable. It serves as evidence of receipt similar to a Post Card, as described in MPEP 503.

New Applications Under 35 U.S.C. 111
If a new application is being filed and the application includes the necessary components for a filing date (see 37 CFR 1.53(b)-(d) and MPEP 506), a Filing Receipt (37 CFR 1.54) will be issued in due course and the date shown on this Acknowledgement Receipt will establish the filing date of the application.

National Stage of an International Application under 35 U.S.C. 371
If a timely submission to enter the national stage of an international application is compliant with the conditions of 35 U.S.C. 371 and other applicable requirements a Form PCT/DO/EO/903 indicating acceptance of the application as a national stage submission under 35 U.S.C. 371 will be issued in addition to the Filing Receipt, in due course.

New International Application Filed with the USPTO as a Receiving Office
If a new international application is being filed and the international application includes the necessary components for an international filing date (see PCT Article 11 and MPEP 1810), a Notification of the International Application Number and of the International Filing Date (Form PCT/RO/105) will be issued in due course, subject to prescriptions concerning national security, and the date shown on this Acknowledgement Receipt will establish the international filing date of the application.

PTO/SB/80 (11-08)
Approved for use through 11/30/2011. OMB 0651-0035
U.S. Patent and Trademark Office; U.S. DEPARTMENT OF COMMERCE
Under the Paperwork Reduction Act of 1995, no persons are required to respond to a collection of information unless it displays a valid OMB control number.

POWER OF ATTORNEY TO PROSECUTE APPLICATIONS BEFORE THE USPTO

I hereby revoke all previous powers of attorney given in the application identified in the attached statement under 37 CFR 3.73(b).

I hereby appoint:

☑ Practitioners associated with the Customer Number: 15516

OR

☐ Practitioner(s) named below (if more than ten patent practitioners are to be named, then a customer number must be used):

Name	Registration Number	Name	Registration Number

as attorney(s) or agent(s) to represent the undersigned before the United States Patent and Trademark Office (USPTO) in connection with any and all patent applications assigned only to the undersigned according to the USPTO assignment records or assignment documents attached to this form in accordance with 37 CFR 3.73(b).

Please change the correspondence address for the application identified in the attached statement under 37 CFR 3.73(b) to:

☑ The address associated with Customer Number: 15516

OR

☐ Firm or Individual Name			
Address			
City		State	Zip
Country			
Telephone		Email	

Assignee Name and Address:

AlphCom, Inc.
99 Rhode Island Street, 3rd Floor
San Francisco, California 94103

A copy of this form, together with a statement under 37 CFR 3.73(b) (Form PTO/SB/96 or equivalent) is required to be filed in each application in which this form is used. The statement under 37 CFR 3.73(b) may be completed by one of the practitioners appointed in this form if the appointed practitioner is authorized to act on behalf of the assignee, and must identify the application in which this Power of Attorney is to be filed.

SIGNATURE of Assignee of Record
The individual whose signature and title is supplied below is authorized to act on behalf of the assignee

Signature		Date	12-2-2011
Name	Michael Edward Smith Luna	Telephone	(877) 254-7426
Title	Chief Technology Officer, AlphCom, Inc.		

This collection of information is required by 37 CFR 1.31, 1.32 and 1.33. The information is required to obtain or retain a benefit by the public which is to file (and by the USPTO to process) an application. Confidentiality is governed by 35 U.S.C. 122 and 37 CFR 1.11 and 1.14. This collection is estimated to take 3 minutes to complete, including gathering, preparing, and submitting the completed application form to the USPTO. Time will vary depending upon the individual case. Any comments on the amount of time you require to complete this form and/or suggestions for reducing this burden, should be sent to the Chief Information Officer, U.S. Patent and Trademark Office, U.S. Department of Commerce, P.O. Box 1450, Alexandria, VA 22313-1450. DO NOT SEND FEES OR COMPLETED FORMS TO THIS ADDRESS. SEND TO: **Commissioner for Patents, P.O. Box 1450, Alexandria, VA 22313-1450.**

If you need assistance in completing the form, call 1-800-PTO-9199 and select option 2.

PTO/SB/96 (07-09)
Approved for use through 07/31/2012. OMB 0651-0031
U.S. Patent and Trademark Office; U.S. DEPARTMENT OF COMMERCE
Under the Paperwork Reduction Act of 1995, no persons are required to respond to a collection of information unless it displays a valid OMB control number.

STATEMENT UNDER 37 CFR 3.73(b)

Applicant/Patent Owner: Gregory C. Burnett

Application No./Patent No.: 12/139,333 Filed/Issue Date: 06/13/2008

Titled: DUAL OMNIDIRECTIONAL MICROPHONE ARRAY (DOMA)

AliphCom, Inc., a Corporation
(Name of Assignee) (Type of Assignee, e.g., corporation, partnership, university, government agency, etc.)

states that it is:

1. [X] the assignee of the entire right, title, and interest in;

2. [ ] an assignee of less than the entire right, title, and interest in (The extent (by percentage) of its ownership interest is _____ %); or

3. [ ] the assignee of an undivided interest in the entirety of (a complete assignment from one of the joint inventors was made)

the patent application/patent identified above, by virtue of either:

A. [X] An assignment from the inventor(s) of the patent application/patent identified above. The assignment was recorded in the United States Patent and Trademark Office at Reel 021532, Frame 0602, or for which a copy therefore is attached.

OR

B. [ ] A chain of title from the inventor(s), of the patent application/patent identified above, to the current assignee as follows:

1. From: _____ To: _____
   The document was recorded in the United States Patent and Trademark Office at
   Reel _____, Frame _____, or for which a copy thereof is attached.

2. From: _____ To: _____
   The document was recorded in the United States Patent and Trademark Office at
   Reel _____, Frame _____, or for which a copy thereof is attached.

3. From: _____ To: _____
   The document was recorded in the United States Patent and Trademark Office at
   Reel _____, Frame _____, or for which a copy thereof is attached.

[ ] Additional documents in the chain of title are listed on a supplemental sheet(s).

[X] As required by 37 CFR 3.73(b)(1)(i), the documentary evidence of the chain of title from the original owner to the assignee was, or concurrently is being, submitted for recordation pursuant to 37 CFR 3.11.

[NOTE: A separate copy (*i.e.*, a true copy of the original assignment document(s)) must be submitted to Assignment Division in accordance with 37 CFR Part 3, to record the assignment in the records of the USPTO. See MPEP 302.08]

The undersigned (whose title is supplied below) is authorized to act on behalf of the assignee.

Signature — Date: December 2, 2011

Scott S. Kokka — Title: Attorney of Record
Printed or Typed Name

This collection of information is required by 37 CFR 3.73(b). The information is required to obtain or retain a benefit by the public which is to file (and by the USPTO to process) an application. Confidentiality is governed by 35 U.S.C. 122 and 37 CFR 1.11 and 1.14. This collection is estimated to take 12 minutes to complete, including gathering, preparing, and submitting the completed application form to the USPTO. Time will vary depending upon the individual case. Any comments on the amount of time you require to complete this form and/or suggestions for reducing this burden, should be sent to the Chief Information Officer, U.S. Patent and Trademark Office, U.S. Department of Commerce, P.O. Box 1450, Alexandria, VA 22313-1450. DO NOT SEND FEES OR COMPLETED FORMS TO THIS ADDRESS. **SEND TO: Commissioner for Patents, P.O. Box 1450, Alexandria, VA 22313-1450.**

If you need assistance in completing the form, call 1-800-PTO-9199 and select option 2.

Electronic Acknowledgement Receipt	
EFS ID:	11537229
Application Number:	12139333
International Application Number:	
Confirmation Number:	1204
Title of Invention:	Dual Omnidirectional Microphone Array (DOMA)
First Named Inventor/Applicant Name:	Gregory C. Burnett
Customer Number:	98195
Filer:	Scott Susumu Kokka
Filer Authorized By:	
Attorney Docket Number:	ALPH.P035
Receipt Date:	02-DEC-2011
Filing Date:	13-JUN-2008
Time Stamp:	21:27:23
Application Type:	Utility under 35 USC 111(a)

Payment information:

Submitted with Payment	no

File Listing:

Document Number	Document Description	File Name	File Size(Bytes)/ Message Digest	Multi Part /.zip	Pages (if appl.)
1		ALI-050A_GPOA_and_stmt_37 CCFR373b_asfiled.pdf	381981 1df370e54b9e689104eeb4222836fe8a1301071f	yes	2

	Multipart Description/PDF files in .zip description		
	Document Description	**Start**	**End**
	Power of Attorney	1	1
	Assignee showing of ownership per 37 CFR 3.73(b).	2	2
Warnings:			
Information:			
	Total Files Size (in bytes):	381981	

This Acknowledgement Receipt evidences receipt on the noted date by the USPTO of the indicated documents, characterized by the applicant, and including page counts, where applicable. It serves as evidence of receipt similar to a Post Card, as described in MPEP 503.

New Applications Under 35 U.S.C. 111
If a new application is being filed and the application includes the necessary components for a filing date (see 37 CFR 1.53(b)-(d) and MPEP 506), a Filing Receipt (37 CFR 1.54) will be issued in due course and the date shown on this Acknowledgement Receipt will establish the filing date of the application.

National Stage of an International Application under 35 U.S.C. 371
If a timely submission to enter the national stage of an international application is compliant with the conditions of 35 U.S.C. 371 and other applicable requirements a Form PCT/DO/EO/903 indicating acceptance of the application as a national stage submission under 35 U.S.C. 371 will be issued in addition to the Filing Receipt, in due course.

New International Application Filed with the USPTO as a Receiving Office
If a new international application is being filed and the international application includes the necessary components for an international filing date (see PCT Article 11 and MPEP 1810), a Notification of the International Application Number and of the International Filing Date (Form PCT/RO/105) will be issued in due course, subject to prescriptions concerning national security, and the date shown on this Acknowledgement Receipt will establish the international filing date of the application.

UNITED STATES PATENT AND TRADEMARK OFFICE

UNITED STATES DEPARTMENT OF COMMERCE
United States Patent and Trademark Office
Address: COMMISSIONER FOR PATENTS
P.O. Box 1450
Alexandria, Virginia 22313-1450
www.uspto.gov

APPLICATION NUMBER	FILING OR 371(C) DATE	FIRST NAMED APPLICANT	ATTY. DOCKET NO./TITLE
12/139,333	06/13/2008	Gregory C. Burnett	ALPH.P035

CONFIRMATION NO. 1204

POWER OF ATTORNEY NOTICE

98195
Gregory & Sawrie LLP
2018 Bissonnet Street
Houston, TX 77005

OC000000051309346

Date Mailed: 12/08/2011

NOTICE REGARDING CHANGE OF POWER OF ATTORNEY

This is in response to the Power of Attorney filed 11/29/2011.

- The Power of Attorney to you in this application has been revoked by the assignee who has intervened as provided by 37 CFR 3.71. Future correspondence will be mailed to the new address of record(37 CFR 1.33).

/hchristian/

Office of Data Management, Application Assistance Unit (571) 272-4000, or (571) 272-4200, or 1-888-786-0101

UNITED STATES PATENT AND TRADEMARK OFFICE

UNITED STATES DEPARTMENT OF COMMERCE
United States Patent and Trademark Office
Address: COMMISSIONER FOR PATENTS
P.O. Box 1450
Alexandria, Virginia 22313-1450
www.uspto.gov

APPLICATION NUMBER	FILING OR 371(C) DATE	FIRST NAMED APPLICANT	ATTY. DOCKET NO./TITLE
12/139,333	06/13/2008	Gregory C. Burnett	ALPH.P035

CONFIRMATION NO. 1204

POA ACCEPTANCE LETTER

15516
Kokka & Backus, PC
703 Hight Street
Palo Alto, CA 94301

OC000000051309386

Date Mailed: 12/08/2011

NOTICE OF ACCEPTANCE OF POWER OF ATTORNEY

This is in response to the Power of Attorney filed 11/29/2011.

The Power of Attorney in this application is accepted. Correspondence in this application will be mailed to the above address as provided by 37 CFR 1.33.

/hchristian/

Office of Data Management, Application Assistance Unit (571) 272-4000, or (571) 272-4200, or 1-888-786-0101

IN THE UNITED STATES PATENT AND TRADEMARK OFFICE

In re the Application of:
Gregory C. Burnett

Application Serial No.: 12/139,333

Filing Date: June 13, 2008

For: DUAL OMNIDIRECTIONAL MICROPHONE ARRAY (DOMA)

Examiner: WEISS, Howard

Group Art Unit: 2814

Date: January 17, 2012

Atty. Docket No.: ALI-050A

CERTIFICATE OF TRANSMISSION

I hereby certify that this correspondence is being deposited via EFS-Web with the United States Patent and Trademark Office on January 17, 2012.
Signed: _____
Kate M. Cleland

AMENDMENT A

Dear Sir:

Please find enclosed a complete, updated claim listing, amendments to the specification and remarks in response to the Office Action mailed July 14, 2011, as follows:

Amendments to the Specification begin on page 2;

Amendments to the Claims are reflected in the claim listing, beginning on page 5;

Remarks begin on page 15.

REMARKS

Claims 1, 3, 9, 23, 28-31, 37 and 42-43 have been amended to clarify the subject matter regarded as the invention. Claims 1-48 remain pending.

Objections to Specification

The Examiner has indicated that the title of the invention is not sufficiently descriptive. Applicant has amended the title from "Dual Omnidirectional Microphone Array (DOMA)" to "Forming Virtual Microphone Arrays Using Dual Omnidirectional Microphone Array (DOMA)," which Applicant believes to be sufficiently descriptive.

The Examiner also has objected to the Specification for not including a "BRIEF SUMMARY OF THE INVENTION" section. Applicant has added such a section to the Specification after page 5, line 2, and before the section titled "DETAILED DESCRIPTION," as indicated above. This section includes a brief summary of the invention.

No new matter was introduced by the amendments to the Specification. Applicant submits that the objections to the Specification are overcome, and respectfully requests that the objections be withdrawn.

Nonstatutory Double Patenting Rejection

The Examiner has provisionally rejected claims 1-48 on the ground of nonstatutory obviousness-type double patenting as being unpatentable over claims 1-40 of co-pending U.S. Patent Application No. 12/139,344, and claims 1-53 of co-pending U.S. Patent Application No. 12/139,355 in view of McArthur et al. Applicant is filing concurrently herewith a terminal disclaimer, in compliance with 37 CFR 1.321(c), disclaiming the terminal part of the statutory term of any patent granted on the present application, which would extend beyond the expiration

date of the full statutory term of any patent(s) granted on U.S. Patent Application No. 12/139,344 and U.S. Patent Application No. 12/139,355. Thus, Applicant submits that this rejection is overcome, and respectfully requests that the rejection be withdrawn.

Rejections Under 35 U.S.C. §§ 102 and 103

The Examiner has rejected claims 1, 2, 21, 22 and 30 under 35 U.S.C. § 102(b) as being anticipated by U.S. Patent No. 5,473,701 to Cezanne et al. (hereinafter "Cezanne"). Claims 3-20, 23-29 and 31-48 were rejected under 35 U.S.C. § 103(a) as being unpatentable over Cezanne and U.S. Patent No. 7,386,135 to Fan (hereinafter "Fan").

The rejections are respectfully traversed. As amended, claim 1 recites "… a first virtual microphone comprising a first combination of a first microphone signal and a second microphone signal, the first virtual microphone having a first linear response to speech, the first linear response being substantially similar across a plurality of frequencies for a speech source located within a predetermined angle relative to an axis of the microphone array, wherein the first microphone signal is generated by a first physical microphone and the second microphone signal is generated by a second physical microphone; … ." Neither Cezanne nor Fan describe, disclose, teach, suggest, or motivate "… a first virtual microphone comprising a first combination of a first microphone signal and a second microphone signal, the first virtual microphone having a first linear response to speech, the first linear response being substantially similar across a plurality of frequencies for a speech source located within a predetermined angle relative to an axis of the microphone array, wherein the first microphone signal is generated by a first physical microphone and the second microphone signal is generated by a second physical microphone; … ." Thus, Applicants submit that claim 1 is allowable for at least the reasons stated above.

Claims 2-22 depend from claim 1 and are believed to be allowable for the same reasons described above.

Claims 23, 28-30 and 42 have been amended similarly and are believed to be allowable for at least the same reasons described above. Claims 24-27, 31-41 and 43-48 depend from claims 23, 30 and 42, respectively, and also are believed to be allowable for at least the same reasons described above.

Reconsideration of the application and allowance of all claims are respectfully requested based on the preceding remarks. If at any time the Examiner believes that an interview would be helpful, please contact the undersigned.

Respectfully submitted,

Chien-Ju Alice Chuang
Reg. No. 65,914

KOKKA & BACKUS, PC
703 High Street
Palo Alto, CA 94301-2447
Tel: (650) 585-2359
Fax: (650) 566-9922

IN THE UNITED STATES PATENT AND TRADEMARK OFFICE

In re Application of: Gregory C. Burnett	Confirmation No.: 1204
Application No.: 12/139,333	Examiner: WEISS, Howard
Filed: June 13, 2008	Group Art Unit: 2814
For: DUAL OMNIDIRECTIONAL MICROPHONE ARRAY (DOMA)	Date: January 17, 2012
	Atty. Docket No.: ALI-050A

CERTIFICATE OF MAILING

I hereby certify that this correspondence is being transmitted to the United States Patent and Trademark Office via EFS Web on January 17, 2012.

Signed: K. Cleland
Kate M. Cleland

TERMINAL DISCLAIMER UNDER 37 C.F.R. § 1.321 TO OBVIATE A PROVISIONAL PATENTING REJECTION

Commissioner for Patents
PO Box 1450
Alexandria, VA 22313-1450

Dear Sir or Madam:

The owner(s), AliphCom, Inc. (Assignee), of the entire interest in the above-identified application hereby disclaims, except as provided below, the terminal part of the statutory term of any patent granted on the above-identified application (hereafter "instant application"), which would extend beyond the expiration date of the full statutory term defined in 35 U.S.C. 154 and 173 of any patent granted on pending reference Application Number 12/139,344, filed on June 13, 2008, and pending reference Application Number 12/139,355, filed on June 13, 2008 (hereafter collectively "reference patent applications"), as presently shortened by any terminal disclaimer, and as the term of any patent granted on said reference patent applications may be shortened by any terminal disclaimer filed prior to the grant of any patent on the reference patent applications. The owner(s) hereby agrees that any patent so granted on the above-identified application shall be enforceable only for and during

such period that it and any patent granted on the reference patent applications are commonly owned. This agreement runs with any patent granted on the above-identified application and is binding upon the grantee, its successors or assigns.

In making the above disclaimer, the owner does not disclaim the terminal part of any patent granted on the above-identified application that would extend to the expiration date of the full statutory term as defined in 35 U.S.C. 154 and 173 of any patent(s) granted on said reference patent applications, as the term of any patent(s) granted on said reference patent applications may be shortened by any terminal disclaimer filed prior to the grant of any patent(s) on the pending reference applications, in the event that it later: expires for failure to pay a maintenance fee, is held unenforceable, is found invalid by a court of competent jurisdiction, is statutorily disclaimed in whole or terminally disclaimed under 37 CFR 1.321, has all claims canceled by a reexamination certificate, is reissued or is in any matter terminated prior to the expiration of its full statutory term as presently shortened by any terminal disclaimer.

We hereby submit the amount of $320.00 to cover the statutory disclaimer fees. If any questions arise regarding this statutory disclaimer, please contact the undersigned attorney or agent of record.

Respectfully submitted,

Chien-Ju Alice Chuang
Reg. No. 65,914

Date: January 17, 2012

Kokka & Backus, PC
200 Page Mill Road, Suite 103
Palo Alto, CA 94306
Tel (650) 585-2359
Fax (650) 566-9922

Electronic Patent Application Fee Transmittal

Application Number:	12139333
Filing Date:	13-Jun-2008
Title of Invention:	Dual Omnidirectional Microphone Array (DOMA)
First Named Inventor/Applicant Name:	Gregory C. Burnett
Filer:	Chien-Ju Alice Chuang/Kate Cleland
Attorney Docket Number:	ALI-050A

Filed as Large Entity

Utility under 35 USC 111(a) Filing Fees

Description	Fee Code	Quantity	Amount	Sub-Total in USD($)
Basic Filing:				
Pages:				
Claims:				
Miscellaneous-Filing:				
Petition:				
Patent-Appeals-and-Interference:				
Post-Allowance-and-Post-Issuance:				
Extension-of-Time:				
Extension - 3 months with $0 paid	1253	1	1270	1270

Description	Fee Code	Quantity	Amount	Sub-Total in USD($)
Miscellaneous:				
Statutory or terminal disclaimer	1814	2	160	320
		Total in USD ($)		**1590**

Electronic Acknowledgement Receipt	
EFS ID:	11857332
Application Number:	12139333
International Application Number:	
Confirmation Number:	1204
Title of Invention:	Dual Omnidirectional Microphone Array (DOMA)
First Named Inventor/Applicant Name:	Gregory C. Burnett
Customer Number:	15516
Filer:	Chien-Ju Alice Chuang
Filer Authorized By:	
Attorney Docket Number:	ALI-050A
Receipt Date:	17-JAN-2012
Filing Date:	13-JUN-2008
Time Stamp:	21:58:43
Application Type:	Utility under 35 USC 111(a)

Payment information:

Submitted with Payment	yes
Payment Type	Credit Card
Payment was successfully received in RAM	$1590
RAM confirmation Number	8827
Deposit Account	
Authorized User	

File Listing:

Document Number	Document Description	File Name	File Size(Bytes)/ Message Digest	Multi Part /.zip	Pages (if appl.)

1		ALI-050A_Response_to_Office_Action_asfiled.pdf	3719594 66fb1c321f924dade30818fcfb26df42dd6c5703	yes	19
	Multipart Description/PDF files in .zip description				
	Document Description		**Start**	**End**	
	Amendment/Req. Reconsideration-After Non-Final Reject		1	17	
	Terminal Disclaimer Filed		18	19	
Warnings:					
Information:					
2	Fee Worksheet (SB06)	fee-info.pdf	32014 e3f0f1acd987d74d6df62e86e62db71e37eda0b6	no	2
Warnings:					
Information:					
		Total Files Size (in bytes):	3751608		

This Acknowledgement Receipt evidences receipt on the noted date by the USPTO of the indicated documents, characterized by the applicant, and including page counts, where applicable. It serves as evidence of receipt similar to a Post Card, as described in MPEP 503.

<u>New Applications Under 35 U.S.C. 111</u>
If a new application is being filed and the application includes the necessary components for a filing date (see 37 CFR 1.53(b)-(d) and MPEP 506), a Filing Receipt (37 CFR 1.54) will be issued in due course and the date shown on this Acknowledgement Receipt will establish the filing date of the application.

<u>National Stage of an International Application under 35 U.S.C. 371</u>
If a timely submission to enter the national stage of an international application is compliant with the conditions of 35 U.S.C. 371 and other applicable requirements a Form PCT/DO/EO/903 indicating acceptance of the application as a national stage submission under 35 U.S.C. 371 will be issued in addition to the Filing Receipt, in due course.

<u>New International Application Filed with the USPTO as a Receiving Office</u>
If a new international application is being filed and the international application includes the necessary components for an international filing date (see PCT Article 11 and MPEP 1810), a Notification of the International Application Number and of the International Filing Date (Form PCT/RO/105) will be issued in due course, subject to prescriptions concerning national security, and the date shown on this Acknowledgement Receipt will establish the international filing date of the application.

PTO/SB/06 (07-06)
Approved for use through 1/31/2007. OMB 0651-0032
U.S. Patent and Trademark Office; U.S. DEPARTMENT OF COMMERCE
Under the Paperwork Reduction Act of 1995, no persons are required to respond to a collection of information unless it displays a valid OMB control number.

PATENT APPLICATION FEE DETERMINATION RECORD

Substitute for Form PTO-875

Application or Docket Number	Filing Date	
12/139,333	06/13/2008	☐ To be Mailed

APPLICATION AS FILED – PART I

FOR	(Column 1) NUMBER FILED	(Column 2) NUMBER EXTRA	SMALL ENTITY ☐ RATE ($)	SMALL ENTITY FEE ($)	OR	OTHER THAN SMALL ENTITY RATE ($)	OTHER THAN SMALL ENTITY FEE ($)
☐ BASIC FEE (37 CFR 1.16(a), (b), or (c))	N/A	N/A	N/A			N/A	
☐ SEARCH FEE (37 CFR 1.16(k), (i), or (m))	N/A	N/A	N/A			N/A	
☐ EXAMINATION FEE (37 CFR 1.16(o), (p), or (q))	N/A	N/A	N/A			N/A	
TOTAL CLAIMS (37 CFR 1.16(i))	minus 20 =	*	X $ =		OR	X $ =	
INDEPENDENT CLAIMS (37 CFR 1.16(h))	minus 3 =	*	X $ =			X $ =	
☐ APPLICATION SIZE FEE (37 CFR 1.16(s))	If the specification and drawings exceed 100 sheets of paper, the application size fee due is $250 ($125 for small entity) for each additional 50 sheets or fraction thereof. See 35 U.S.C. 41(a)(1)(G) and 37 CFR 1.16(s).						
☐ MULTIPLE DEPENDENT CLAIM PRESENT (37 CFR 1.16(j))							
* If the difference in column 1 is less than zero, enter "0" in column 2.			TOTAL			TOTAL	

APPLICATION AS AMENDED – PART II

AMENDMENT 01/17/2012

	(Column 1) CLAIMS REMAINING AFTER AMENDMENT		(Column 2) HIGHEST NUMBER PREVIOUSLY PAID FOR	(Column 3) PRESENT EXTRA	SMALL ENTITY RATE ($)	SMALL ENTITY ADDITIONAL FEE ($)	OR	OTHER THAN SMALL ENTITY RATE ($)	OTHER THAN SMALL ENTITY ADDITIONAL FEE ($)
Total (37 CFR 1.16(i))	* 48	Minus	** 48	= 0	X $ =		OR	X $60=	0
Independent (37 CFR 1.16(h))	* 6	Minus	***6	= 0	X $ =		OR	X $250=	0
☐ Application Size Fee (37 CFR 1.16(s))									
☐ FIRST PRESENTATION OF MULTIPLE DEPENDENT CLAIM (37 CFR 1.16(j))							OR		
					TOTAL ADD'L FEE		OR	TOTAL ADD'L FEE	0

AMENDMENT

	(Column 1) CLAIMS REMAINING AFTER AMENDMENT		(Column 2) HIGHEST NUMBER PREVIOUSLY PAID FOR	(Column 3) PRESENT EXTRA	RATE ($)	ADDITIONAL FEE ($)		RATE ($)	ADDITIONAL FEE ($)
Total (37 CFR 1.16(i))	*	Minus	**	=	X $ =		OR	X $ =	
Independent (37 CFR 1.16(h))	*	Minus	***	=	X $ =		OR	X $ =	
☐ Application Size Fee (37 CFR 1.16(s))									
☐ FIRST PRESENTATION OF MULTIPLE DEPENDENT CLAIM (37 CFR 1.16(j))							OR		
					TOTAL ADD'L FEE		OR	TOTAL ADD'L FEE	

* If the entry in column 1 is less than the entry in column 2, write "0" in column 3.
** If the "Highest Number Previously Paid For" IN THIS SPACE is less than 20, enter "20".
*** If the "Highest Number Previously Paid For" IN THIS SPACE is less than 3, enter "3".
The "Highest Number Previously Paid For" (Total or Independent) is the highest number found in the appropriate box in column 1.

Legal Instrument Examiner:
/ROCHELLE GETER/

This collection of information is required by 37 CFR 1.16. The information is required to obtain or retain a benefit by the public which is to file (and by the USPTO to process) an application. Confidentiality is governed by 35 U.S.C. 122 and 37 CFR 1.14. This collection is estimated to take 12 minutes to complete, including gathering, preparing, and submitting the completed application form to the USPTO. Time will vary depending upon the individual case. Any comments on the amount of time you require to complete this form and/or suggestions for reducing this burden, should be sent to the Chief Information Officer, U.S. Patent and Trademark Office, U.S. Department of Commerce, P.O. Box 1450, Alexandria, VA 22313-1450. DO NOT SEND FEES OR COMPLETED FORMS TO THIS ADDRESS. **SEND TO: Commissioner for Patents, P.O. Box 1450, Alexandria, VA 22313-1450.**
If you need assistance in completing the form, call 1-800-PTO-9199 and select option 2.

AMENDMENTS TO THE SPECIFICATION

Please change the title of the present application from "Dual Omnidirectional Microphone Array (DOMA)" to "Forming Virtual Microphone Arrays Using Dual Omnidirectional Microphone Array (DOMA)."

Please insert the following section titled "SUMMARY OF THE INVENTION" **after** page 5, line 2, and **before** the section titled "DETAILED DESCRIPTION," in the Specification:

SUMMARY OF THE INVENTION

The present invention provides for dual omnidirectional microphone array devices, systems and methods.

In accordance with one embodiment, a microphone array is formed with a first virtual microphone that includes a first combination of a first microphone signal and a second microphone signal, wherein the first microphone signal is generated by a first physical microphone and the second microphone signal is generated by a second physical microphone; and a second virtual microphone that includes a second combination of the first microphone signal and the second microphone signal, wherein the second combination is different from the first combination. The first virtual microphone and the second virtual microphone are distinct virtual directional microphones with substantially similar responses to noise and substantially dissimilar responses to speech.

In accordance with another embodiment, a microphone array is formed with a first virtual microphone formed from a first combination of a first microphone signal and a second microphone signal, wherein the first microphone signal is generated by a first omnidirectional microphone and the second microphone signal is generated by a second omnidirectional microphone; and a second virtual microphone formed from a second combination of the first

microphone signal and the second microphone signal, wherein the second combination is different from the first combination. The first virtual microphone has a first linear response to speech that is devoid of a null, and the second virtual microphone has a second linear response to speech that has a single null oriented in a direction toward a source of the speech, wherein the speech is human speech.

In accordance with another embodiment, a device includes a first microphone outputting a first microphone signal and a second microphone outputting a second microphone signal; and a processing component coupled to the first microphone signal and the second microphone signal, the processing component generating a virtual microphone array comprising a first virtual microphone and a second virtual microphone, wherein the first virtual microphone comprises a first combination of the first microphone signal and the second microphone signal, and wherein the second virtual microphone comprises a second combination of the first microphone signal and the second microphone signal. The second combination is different from the first combination. The first virtual microphone and the second virtual microphone have substantially similar responses to noise and substantially dissimilar responses to speech.

In accordance with another embodiment, a device includes a first microphone outputting a first microphone signal and a second microphone outputting a second microphone signal, wherein the first microphone and the second microphone are omnidirectional microphones; and a virtual microphone array comprising a first virtual microphone and a second virtual microphone, wherein the first virtual microphone comprises a first combination of the first microphone signal and the second microphone signal, and the second virtual microphone comprises a second combination of the first microphone signal and the second microphone signal. The second combination is different from the first combination, and the first virtual microphone and the second virtual microphone are distinct virtual directional microphones.

In accordance with another embodiment, a device includes a first physical microphone generating a first microphone signal; a second physical microphone generating a second microphone signal; and a processing component coupled to the first microphone signal and the second microphone signal, the processing component generating a virtual microphone array comprising a first virtual microphone and a second virtual microphone. The first virtual microphone comprises the second microphone signal subtracted from a delayed version of the first microphone signal, and the second virtual microphone comprises a delayed version of the first microphone signal subtracted from the second microphone signal.

In accordance with another embodiment, a sensor includes a physical microphone array including a first physical microphone and a second physical microphone, the first physical microphone outputting a first microphone signal and the second physical microphone outputting a second microphone signal; and a virtual microphone array comprising a first virtual microphone and a second virtual microphone, the first virtual microphone comprising a first combination of the first microphone signal and the second microphone signal, the second virtual microphone comprising a second combination of the first microphone signal and the second microphone signal. The second combination is different from the first combination, and the virtual microphone array includes a single null oriented in a direction toward a source of speech of a human speaker.

CLAIM LISTING

Please amend claims 1, 3, 9, 23, 28-31, 37 and 42-43, as indicated below.

1. (Currently amended) A microphone array comprising:

a first virtual microphone comprising a first combination of a first microphone signal and a second microphone signal, the first virtual microphone having a first linear response to speech, the first linear response being substantially similar across a plurality of frequencies for a speech source located within a predetermined angle relative to an axis of the microphone array, wherein the first microphone signal is generated by a first physical microphone and the second microphone signal is generated by a second physical microphone; and

a second virtual microphone comprising a second combination of the first microphone signal and the second microphone signal, wherein the second combination is different from the first combination, wherein the first virtual microphone and the second virtual microphone are distinct virtual directional microphones with substantially similar responses to noise and substantially dissimilar responses to speech.

2. (Original) The microphone array of claim 1, wherein the first and second physical microphones are omnidirectional

3. (Currently amended) The microphone array of claim 1, wherein the ~~first virtual microphone has a~~ first linear response to speech ~~that~~ is devoid of a null, wherein the speech is human speech.

4. (Original) The microphone array of claim 3, wherein the second virtual microphone has a second linear response to speech that includes a single null oriented in a direction toward a source of the speech.

5. (Original) The microphone array of claim 4, wherein the single null is a region of the second linear response having a measured response level that is lower than the measured response level of any other region of the second linear response.

6. (Original) The microphone array of claim 4, wherein the second linear response includes a primary lobe oriented in a direction away from the source of the speech.

7. (Original) The microphone array of claim 6, wherein the primary lobe is a region of the second linear response having a measured response level that is greater than the measured response level of any other region of the second linear response.

8. (Original) The microphone array of claim 4, wherein the first physical microphone and the second physical microphone are positioned along an axis and separated by a first distance.

9. (Currently amended) The microphone array of claim 8, wherein a midpoint of the axis is a second distance from [[a]]<u>the</u> speech source that generates the speech, wherein the speech source is located in a direction defined by an angle relative to the midpoint.

10. (Original) The microphone array of claim 9, wherein the first virtual microphone comprises the second microphone signal subtracted from the first microphone signal.

11. (Original) The microphone array of claim 10, wherein the first microphone signal is delayed.

12. (Original) The microphone array of claim 11, wherein the delay is raised to a power that is proportional to a time difference between arrival of the speech at the first virtual microphone and arrival of the speech at the second virtual microphone.

13. (Original) The microphone array of claim 11, wherein the delay is raised to a power that is proportional to a sampling frequency multiplied by a quantity equal to a third distance subtracted from a fourth distance, the third distance being between the first physical microphone and the speech source and the fourth distance being between the second physical microphone and the speech source.

14. (Original) The microphone array of claim 10, wherein the second microphone signal is multiplied by a ratio, wherein the ratio is a ratio of a third distance to a fourth distance, the third distance being between the first physical microphone and the speech source and the fourth distance being between the second physical microphone and the speech source.

15. (Original) The microphone array of claim 9, wherein the second virtual microphone comprises the first microphone signal subtracted from the second microphone signal.

16. (Original) The microphone array of claim 15, wherein the first microphone signal is delayed.

17. (Original) The microphone array of claim 16, wherein the delay is raised to a power that is proportional to a time difference between arrival of the speech at the first virtual microphone and arrival of the speech at the second virtual microphone.

18. (Original) The microphone array of claim 16, wherein the power is proportional to a sampling frequency multiplied by a quantity equal to a third distance subtracted from a fourth distance, the third distance being between the first physical microphone and the speech source and the fourth distance being between the second physical microphone and the speech source.

19. (Original) The microphone array of claim 18, wherein the first microphone signal is multiplied by a ratio, wherein the ratio is a ratio of the third distance to the fourth distance.

20. (Original) The microphone array of claim 4, wherein the single null is located at a distance from at least one of the first physical microphone and the second physical microphone where the source of the speech is expected to be.

21. (Original) The microphone array of claim 1, wherein the first virtual microphone comprises the second microphone signal subtracted from a delayed version of the first microphone signal.

22. (Original) The microphone array of claim 21, wherein the second virtual microphone comprises a delayed version of the first microphone signal subtracted from the second microphone signal.

23. (Currently amended) A microphone array comprising:

a first virtual microphone formed from a first combination of a first microphone signal and a second microphone signal, wherein the first microphone signal is generated by a first omnidirectional microphone and the second microphone signal is generated by a second omnidirectional microphone; and

a second virtual microphone formed from a second combination of the first microphone signal and the second microphone signal, wherein the second combination is different from the first combination;

wherein the first virtual microphone has a first linear response to speech that is <u>substantially similar across a plurality of frequencies for a speech source within a predetermined angle relative to an axis of the microphone array and</u> devoid of a null, wherein the second virtual microphone has a second linear response to speech that has a single null oriented in a direction toward a source of the speech, wherein the speech is human speech.

24. (Original) The microphone array of claim 23, wherein the first virtual microphone and the second virtual microphone have a linear response to noise that is substantially similar.

25. (Original) The microphone array of claim 23, wherein the single null is a region of the second linear response having a measured response level that is lower than the measured response level of any other region of the second linear response.

26. (Original) The microphone array of claim 23, wherein the second linear response includes a primary lobe oriented in a direction away from the source of the speech.

27. (Original) The microphone array of claim 26, wherein the primary lobe is a region of the second linear response having a measured response level that is greater than the measured response level of any other region of the second linear response.

28. (Currently amended) A device comprising:

a first microphone outputting a first microphone signal and a second microphone outputting a second microphone signal; and

a processing component coupled to the first microphone signal and the second microphone signal, the processing component generating a virtual microphone array comprising a first virtual microphone and a second virtual microphone, wherein the first virtual microphone comprises a first combination of the first microphone signal and the second microphone signal, wherein the second virtual microphone comprises a second combination of the first microphone signal and the second microphone signal, wherein the second combination is different from the first combination, wherein the first virtual microphone and the second virtual microphone have substantially similar responses to noise and substantially dissimilar responses to speech, <u>the first virtual microphone having a first linear response to speech, the first linear response being substantially similar across a plurality of frequencies for a speech source within a predetermined angle relative to an axis of the microphone array</u>.

29. (Original) A device comprising:

a first microphone outputting a first microphone signal and a second microphone outputting a second microphone signal, wherein the first microphone and the second microphone are omnidirectional microphones; and

a virtual microphone array comprising a first virtual microphone and a second virtual microphone, the first virtual microphone having a first linear response to speech, the first linear response being substantially similar across a plurality of frequencies for a speech source within a predetermined angle relative to an axis of the microphone array, wherein the first virtual microphone comprises a first combination of the first microphone signal and the second microphone signal, wherein the second virtual microphone comprises a second combination of the first microphone signal and the second microphone signal, wherein the second combination is different from the first combination, wherein the first virtual microphone and the second virtual microphone are distinct virtual directional microphones.

30. (Currently amended) A device comprising:

a first physical microphone generating a first microphone signal;

a second physical microphone generating a second microphone signal; and

a processing component coupled to the first microphone signal and the second microphone signal, the processing component generating a virtual microphone array comprising a first virtual microphone and a second virtual microphone, the first virtual microphone having a first linear response to speech, the first linear response being substantially similar across a plurality of frequencies for a speech source within a predetermined angle relative to an axis of the microphone array,[[;]]

wherein the first virtual microphone comprises the second microphone signal subtracted from a delayed version of the first microphone signal;

wherein the second virtual microphone comprises a delayed version of the first microphone signal subtracted from the second microphone signal.

31. (Currently amended) The device of claim 30, wherein the ~~first virtual microphone has a~~ first linear response to speech ~~that~~ is devoid of a null, wherein the speech is human speech.

32. (Original) The device of claim 31, wherein the second virtual microphone has a second linear response to speech that includes a single null oriented in a direction toward a source of the speech.

33. (Original) The device of claim 32, wherein the single null is a region of the second linear response having a measured response level that is lower than the measured response level of any other region of the second linear response.

34. (Original) The device of claim 32, wherein the second linear response includes a primary lobe oriented in a direction away from the source of the speech.

35. (Original) The device of claim 34, wherein the primary lobe is a region of the second linear response having a measured response level that is greater than the measured response level of any other region of the second linear response.

36. (Original) The device of claim 32, wherein the first physical microphone and the second physical microphone are positioned along an axis and separated by a first distance.

37. (Currently amended) The device of claim 36, wherein a midpoint of the axis is a second distance from [[a]]the speech source that generates the speech, wherein the speech source is located in a direction defined by an angle relative to the midpoint.

38. (Original) The device of claim 37, wherein one or more of the first microphone signal and the second microphone signal is delayed.

39. (Original) The device of claim 38, wherein the delay is raised to a power that is proportional to a time difference between arrival of the speech at the first virtual microphone and arrival of the speech at the second virtual microphone.

40. (Original) The device of claim 39, wherein the power is proportional to a sampling frequency multiplied by a quantity equal to a third distance subtracted from a fourth distance, the third distance being between the first physical microphone and the speech source and the fourth distance being between the second physical microphone and the speech source.

41. (Original) The device of claim 37, wherein one or more of the first microphone signal and the second microphone signal is multiplied by a gain factor.

42. (Currently amended) A sensor comprising:

a physical microphone array including a first physical microphone and a second physical microphone, the first physical microphone outputting a first microphone signal and the second physical microphone outputting a second microphone signal; and

a virtual microphone array comprising a first virtual microphone and a second virtual microphone, the first virtual microphone comprising a first combination of the first microphone signal and the second microphone signal and having a first linear response to speech, the first linear response being substantially similar across a plurality of frequencies for a source of speech within a predetermined angle relative to an axis of the microphone array, the second virtual microphone comprising a second combination of the first microphone signal and the second microphone signal, wherein the second combination is different from the first combination[[;]],

wherein the virtual microphone array includes[[ing]] a single null oriented in a direction toward [[a]]the source of speech of a human speaker.

43. (Currently amended) The sensor of claim 42, wherein the ~~first virtual microphone has a~~ first linear response to speech ~~that~~ is devoid of a null, wherein the second virtual microphone has a second linear response to speech that includes the single null.

44. (Original) The sensor of claim 43, wherein the first virtual microphone and the second virtual microphone have a linear response to noise that is substantially similar.

45. (Original) The sensor of claim 43, wherein the single null is a region of the second linear response to speech having a measured response level that is lower than the measured response level of any other region of the second linear response.

46. (Original) The sensor of claim 43, wherein the second linear response to speech includes a primary lobe oriented in a direction away from the source of the speech.

47. (Original) The sensor of claim 46, wherein the primary lobe is a region of the second linear response having a measured response level that is greater than the measured response level of any other region of the second linear response.

48. (Original) The sensor of claim 42, wherein the single null is located at a distance from the physical microphone array where the source of the speech is expected to be.

Application Number	Application/Control No.	Applicant(s)/Patent under Reexamination
	12/139,333	BURNETT, GREGORY C.

Document Code - DISQ	Internal Document – DO NOT MAIL

TERMINAL DISCLAIMER	☒ APPROVED	☐ DISAPPROVED
Date Filed : 1/17/12	This patent is subject to a Terminal Disclaimer	

Approved/Disapproved by:

ANDRE ROBINSON

U.S. Patent and Trademark Office

UNITED STATES PATENT AND TRADEMARK OFFICE

UNITED STATES DEPARTMENT OF COMMERCE
United States Patent and Trademark Office
Address: COMMISSIONER FOR PATENTS
P.O. Box 1450
Alexandria, Virginia 22313-1450
www.uspto.gov

APPLICATION NO.	FILING DATE	FIRST NAMED INVENTOR	ATTORNEY DOCKET NO.	CONFIRMATION NO.
12/139,333	06/13/2008	Gregory C. Burnett	ALI-050A	1204

15516 7590 04/10/2012
Kokka & Backus, PC
703 Hight Street
Palo Alto, CA 94301

EXAMINER
WEISS, HOWARD

ART UNIT	PAPER NUMBER
2814	

MAIL DATE	DELIVERY MODE
04/10/2012	PAPER

Please find below and/or attached an Office communication concerning this application or proceeding.

The time period for reply, if any, is set in the attached communication.

PTOL-90A (Rev. 04/07)

Office Action Summary	Application No.	Applicant(s)	
	12/139,333	BURNETT, GREGORY C.	
	Examiner	Art Unit	
	HOWARD WEISS	2814	

-- The MAILING DATE of this communication appears on the cover sheet with the correspondence address --

Period for Reply

A SHORTENED STATUTORY PERIOD FOR REPLY IS SET TO EXPIRE 3 MONTH(S) OR THIRTY (30) DAYS, WHICHEVER IS LONGER, FROM THE MAILING DATE OF THIS COMMUNICATION.

- Extensions of time may be available under the provisions of 37 CFR 1.136(a). In no event, however, may a reply be timely filed after SIX (6) MONTHS from the mailing date of this communication.
- If NO period for reply is specified above, the maximum statutory period will apply and will expire SIX (6) MONTHS from the mailing date of this communication.
- Failure to reply within the set or extended period for reply will, by statute, cause the application to become ABANDONED (35 U.S.C. § 133). Any reply received by the Office later than three months after the mailing date of this communication, even if timely filed, may reduce any earned patent term adjustment. See 37 CFR 1.704(b).

Status

1)☒ Responsive to communication(s) filed on *17 January 2012*.

2a)☒ This action is **FINAL**. 2b)☐ This action is non-final.

3)☐ An election was made by the applicant in response to a restriction requirement set forth during the interview on _____; the restriction requirement and election have been incorporated into this action.

4)☐ Since this application is in condition for allowance except for formal matters, prosecution as to the merits is closed in accordance with the practice under *Ex parte Quayle*, 1935 C.D. 11, 453 O.G. 213.

Disposition of Claims

5)☒ Claim(s) *1-48* is/are pending in the application.

5a) Of the above claim(s) _____ is/are withdrawn from consideration.

6)☐ Claim(s) _____ is/are allowed.

7)☒ Claim(s) *1-48* is/are rejected.

8)☐ Claim(s) _____ is/are objected to.

9)☐ Claim(s) _____ are subject to restriction and/or election requirement.

Application Papers

10)☐ The specification is objected to by the Examiner.

11)☐ The drawing(s) filed on _____ is/are: a)☐ accepted or b)☐ objected to by the Examiner.

Applicant may not request that any objection to the drawing(s) be held in abeyance. See 37 CFR 1.85(a).

Replacement drawing sheet(s) including the correction is required if the drawing(s) is objected to. See 37 CFR 1.121(d).

12)☐ The oath or declaration is objected to by the Examiner. Note the attached Office Action or form PTO-152.

Priority under 35 U.S.C. § 119

13)☐ Acknowledgment is made of a claim for foreign priority under 35 U.S.C. § 119(a)-(d) or (f).

a)☐ All b)☐ Some * c)☐ None of:

1.☐ Certified copies of the priority documents have been received.

2.☐ Certified copies of the priority documents have been received in Application No. _____.

3.☐ Copies of the certified copies of the priority documents have been received in this National Stage application from the International Bureau (PCT Rule 17.2(a)).

* See the attached detailed Office action for a list of the certified copies not received.

Attachment(s)

1) ☐ Notice of References Cited (PTO-892)
2) ☐ Notice of Draftsperson's Patent Drawing Review (PTO-948)
3) ☐ Information Disclosure Statement(s) (PTO/SB/08) Paper No(s)/Mail Date _____.
4) ☐ Interview Summary (PTO-413) Paper No(s)/Mail Date. _____ .
5) ☐ Notice of Informal Patent Application
6) ☐ Other: _____.

Attorney's Docket Number: ALPH.P035

Filing Date: 6/13/2008

Continuing Data: claims benefit of 60/934,551 (6/13/2007), 60/953,444 (8/1/2007), 60/954,712 (8/8/2007) and 61/045,377 (4/16/2008)

Claimed Foreign Priority Date: none

Applicant(s): Burnett

Examiner: Howard Weiss

Claim Rejections - 35 USC § 102

1. The following is a quotation of the appropriate paragraphs of 35 U.S.C. 102 that form the basis for the rejections under this section made in this Office action:

   A person shall be entitled to a patent unless –
   (b) the invention was patented or described in a printed publication in this or a foreign country or in public use or on sale in this country, more than one year prior to the date of application for patent in the United States.

2. Claims 1, 2, 21, 22 and 30 are rejected under 35 U.S.C. 102(b) as being anticipated by Cezanne et al. (U.S. Patent No. 5,473,701).

   Cezanne et al. shows all aspects of the instant invention (e.g. Figures 3 to 12) including:

   - a first virtual microphone $\mathbf{C_F}$ comprising a combination of a first signal from a first, delayed, unidirectional physical microphone **10** subtracted **45** from a second signal from a second omnidirectional physical microphone **12** and having a first linear response to speech being substantially similar across a plurality of frequencies $\boldsymbol{\omega}$ for source of speech $\mathbf{S(\omega)}$ within a predetermined angle $\boldsymbol{\theta}$ relative to an axis midpoint (e.g. Equations (1) - (3) in Column 5)
   - a second virtual microphone $\mathbf{C_B}$ comprising a combination of the first signal from a first, delayed, unidirectional physical microphone **10** subtracted **40** from a second signal from a second omnidirectional physical microphone **12**
   - first and second physical omnidirectional microphones positioned along an axis separated by a first distance **d** and a speech source **s(t)** located in a direction defined by an angle $\boldsymbol{\theta}$ relative to the axis midpoint

Claim Rejections - 35 USC § 103

3. The following is a quotation of 35 U.S.C. 103(a) which forms the basis for all obviousness rejections set forth in this Office action:

   (a) A patent may not be obtained though the invention is not identically disclosed or described as set forth in section 102 of this title, if the differences between the subject matter sought to be patented and the prior art are such that the subject matter as a whole would have been obvious at the time the invention was made to a person having ordinary skill in the art to which said subject matter pertains. Patentability shall not be negatived by the manner in which the invention was made.

4. Claims 3 to 20, 23 to 29 and 31 to 48 are rejected under 35 U.S.C. 103(a) as being unpatentable over Cezanne et al. and Fan (U.S. Patent No. 7,386,135).

   Cezanne et al. show most aspects of the instant invention (Paragraph 2) except for the first virtual microphone having a first linear response to speech that is devoid of a null and the second virtual microphone having a second linear response to speech with a single null oriented in a direction toward a source of the speech, wherein the speech is human speech. Fan et al teach (e.g. Figures 2a-c) to have a first virtual microphone **204** having a first linear response to speech that is devoid of a null and the second virtual microphone **202** having a second linear response to speech with a single null oriented in a direction toward a source of the speech, wherein the speech is human speech to help eliminate the leakage of desired acoustics between the beams (Column 5 Lines 35 to 41). It would have been obvious to a person of ordinary skill in the art at the time of invention to have a first virtual microphone having a first linear response to speech that is devoid of a null and the second virtual microphone having a second linear response to speech with a single null oriented in a direction toward a source of the speech, wherein the speech is human speech as taught by Fan in the device of Cezanne et al. to help eliminate the leakage of desired acoustics between the beams.

Terminal Disclaimer

5. The terminal disclaimer filed on 1/17/2012 disclaiming the terminal portion of any patent granted on this application which would extend beyond the expiration date of

U.S. Application Nos. 12/139,344 and 12/139,355 has been reviewed and is accepted. The terminal disclaimer has been recorded.

Response to Arguments

6. Applicant's arguments filed 1/17/2012 have been fully considered but they are not persuasive. The Applicant states that neither the prior art Cezanne et al. nor Fan describe or disclose "… a first virtual microphone comprising a first combination of a first microphone signal and a second microphone signal, the first virtual microphone having a first linear response to speech, the first linear response being substantially similar across a plurality of frequencies for a speech source located within a predetermined angle relative to an axis of the microphone array, wherein the first microphone signal is generated by a first physical microphone and the second microphone signal is generated by a second physical microphone…" However, as stated in the amended rejection above, Cezanne et al. does teach a first virtual microphone $\mathbf{C_F}$ comprising a combination of a first signal from a first, delayed, unidirectional physical microphone **10** subtracted **45** from a second signal from a second omnidirectional physical microphone **12** and having a first linear response to speech being substantially similar across a plurality of frequencies $\boldsymbol{\omega}$ for source of speech $\mathbf{S(\omega)}$ within a predetermined angle $\boldsymbol{\theta}$ relative to an axis midpoint (e.g. Equations (1) - (3) in Column 5). These formulas are similar to those stated in the Specification (Pages 15 and 19 for example). In view of these reasons and those set forth in the present office action, the rejections of the stated claims stand.

Conclusion

7. **THIS ACTION IS MADE FINAL.** Applicant is reminded of the extension of time policy as set forth in 37 CFR 1.136(a).

A shortened statutory period for reply to this final action is set to expire THREE MONTHS from the mailing date of this action. In the event a first reply is filed within TWO MONTHS of the mailing date of this final action and the advisory action is not

mailed until after the end of the THREE-MONTH shortened statutory period, then the shortened statutory period will expire on the date the advisory action is mailed, and any extension fee pursuant to 37 CFR 1.136(a) will be calculated from the mailing date of the advisory action. In no event, however, will the statutory period for reply expire later than SIX MONTHS from the mailing date of this final action.

8. Papers related to this application may be submitted directly to Art Unit 2814 by facsimile transmission. The faxing of such papers must conform with the notice published in the Official Gazette, 1096 OG 30 (15 November 1989). The Art Unit 2814 Fax Center number is **(571) 273-8300**. The Art Unit 2814 Fax Center is to be used only for papers related to Art Unit 2814 applications.

9. Any inquiry concerning this communication or earlier communications from the examiner should be directed to Howard Weiss at **(571) 272-1720** and between the hours of 7:00 AM to 3:00 PM (Eastern Standard Time) Monday through Friday or by e-mail via **Howard.Weiss@uspto.gov**. If attempts to reach the examiner by telephone are unsuccessful, the examiner's supervisor, Wael Fahmy, can be reached on **(571) 272-1705**.

10. Information regarding the status of an application may be obtained from the Patent Application Information Retrieval (PAIR) system. Status information for published applications may be obtained from either Private PAIR or Public PAIR. Status information for unpublished applications is available through Private PAIR only. For more information about the PAIR system, see http://pair-direct.uspto.gov. Should you have questions on access to the Private PAIR system, contact the Electronic Business Center (EBC) at **866-217-9197** (toll-free).

11. The following list is the Examiner's field of search for the present Office Action:

Field of Search	Date
U.S. Class / Subclass(es): 381/92, 94.7; 704/233, E21.004	Thru 4/5/2012
Other Documentation: none	
Electronic Database(s): EAST	Thru 4/5/2012

HW/hw
6 April 2012

/Howard Weiss/
Primary Examiner
Art Unit 2814

Search Notes	Application/Control No.	Applicant(s)/Patent Under Reexamination
	12139333	BURNETT, GREGORY C.
	Examiner	**Art Unit**
	HOWARD WEISS	2814

SEARCHED

Class	Subclass	Date	Examiner
381	92, 94.7	7/7/2011	HW
704	233, E21.004	7/7/2011	HW
updated	updated	4/5/2012	HW

SEARCH NOTES

Search Notes	Date	Examiner
PLUS Analysis Report	7/1/2011	HW
EAST	7/7/2011	HW

INTERFERENCE SEARCH

Class	Subclass	Date	Examiner

EAST Search History

EAST Search History (Prior Art)

Ref #	Hits	Search Query	DBs	Default Operator	Plurals	Time Stamp
L3	2117	(704/233,E21.004).CCLS.	US-PGPUB; USPAT; USOCR; FPRS; EPO; JPO; DERWENT; IBM_TDB	OR	OFF	2012/04/05 09:44
L4	236	(381/94.7).CCLS.	US-PGPUB; USPAT; USOCR; FPRS; EPO; JPO; DERWENT; IBM_TDB	OR	OFF	2012/04/05 09:44
L5	1116	(381/92).CCLS.	US-PGPUB; USPAT; USOCR; FPRS; EPO; JPO; DERWENT; IBM_TDB	OR	OFF	2012/04/05 09:44
L6	216	(L3 or L4 or L5) and @pd>"20110707"	US-PGPUB; USPAT; USOCR; FPRS; EPO; JPO; DERWENT; IBM_TDB	OR	OFF	2012/04/05 09:44

EAST Search History (Interference)

<This search history is empty>

4/5/2012 9:54:54 AM
C:\Users\hweiss\Documents\EAST\Workspaces\12139333.wsp

Index of Claims	Application/Control No.	Applicant(s)/Patent Under Reexamination
	12139333	BURNETT, GREGORY C.
	Examiner	**Art Unit**
	HOWARD WEISS	2814

✓	Rejected	-	Cancelled	N	Non-Elected	A	Appeal
=	Allowed	÷	Restricted	I	Interference	O	Objected

☐ Claims renumbered in the same order as presented by applicant ☐ CPA ☐ T.D. ☐ R.1.47

CLAIM		DATE								
Final	Original	07/07/2011	04/05/2012							
	1	✓	✓							
	2	✓	✓							
	3	✓	✓							
	4	✓	✓							
	5	✓	✓							
	6	✓	✓							
	7	✓	✓							
	8	✓	✓							
	9	✓	✓							
	10	✓	✓							
	11	✓	✓							
	12	✓	✓							
	13	✓	✓							
	14	✓	✓							
	15	✓	✓							
	16	✓	✓							
	17	✓	✓							
	18	✓	✓							
	19	✓	✓							
	20	✓	✓							
	21	✓	✓							
	22	✓	✓							
	23	✓	✓							
	24	✓	✓							
	25	✓	✓							
	26	✓	✓							
	27	✓	✓							
	28	✓	✓							
	29	✓	✓							
	30	✓	✓							
	31	✓	✓							
	32	✓	✓							
	33	✓	✓							
	34	✓	✓							
	35	✓	✓							
	36	✓	✓							

Index of Claims	Application/Control No.	Applicant(s)/Patent Under Reexamination
	12139333	BURNETT, GREGORY C.
	Examiner	**Art Unit**
	HOWARD WEISS	2814

✓	Rejected	-	Cancelled	N	Non-Elected	A	Appeal
=	Allowed	÷	Restricted	I	Interference	O	Objected

☐ Claims renumbered in the same order as presented by applicant ☐ CPA ☐ T.D. ☐ R.1.47

CLAIM		DATE								
Final	Original	07/07/2011	04/05/2012							
	37	✓	✓							
	38	✓	✓							
	39	✓	✓							
	40	✓	✓							
	41	✓	✓							
	42	✓	✓							
	43	✓	✓							
	44	✓	✓							
	45	✓	✓							
	46	✓	✓							
	47	✓	✓							
	48	✓	✓							

Doc code: RCEX
Doc description: Request for Continued Examination (RCE)

PTO/SB/30EFS (07-09)
Approved for use through 07/31/2012. OMB 0651-0031
U.S. Patent and Trademark Office; U.S. DEPARTMENT OF COMMERCE

Under the Paperwork Reduction Act of 1995, no persons are required to respond to a collection of information unless it contains a valid OMB control number.

REQUEST FOR CONTINUED EXAMINATION(RCE)TRANSMITTAL
(Submitted Only via EFS-Web)

Application Number	12139333	Filing Date	2008-06-13	Docket Number (if applicable)	ALI-050A	Art Unit	2814
First Named Inventor	Dr. Gregory C. Burnett			Examiner Name	WEISS, Howard		

This is a Request for Continued Examination (RCE) under 37 CFR 1.114 of the above-identified application.
Request for Continued Examination (RCE) practice under 37 CFR 1.114 does not apply to any utility or plant application filed prior to June 8, 1995, or to any design application. The Instruction Sheet for this form is located at WWW.USPTO.GOV

SUBMISSION REQUIRED UNDER 37 CFR 1.114

Note: If the RCE is proper, any previously filed unentered amendments and amendments enclosed with the RCE will be entered in the order in which they were filed unless applicant instructs otherwise. If applicant does not wish to have any previously filed unentered amendment(s) entered, applicant must request non-entry of such amendment(s).

☐ Previously submitted. If a final Office action is outstanding, any amendments filed after the final Office action may be considered as a submission even if this box is not checked.

- ☐ Consider the arguments in the Appeal Brief or Reply Brief previously filed on _____
- ☐ Other _____

☒ Enclosed

- ☒ Amendment/Reply
- ☐ Information Disclosure Statement (IDS)
- ☐ Affidavit(s)/ Declaration(s)
- ☐ Other _____

MISCELLANEOUS

☐ Suspension of action on the above-identified application is requested under 37 CFR 1.103(c) for a period of months _____
(Period of suspension shall not exceed 3 months; Fee under 37 CFR 1.17(i) required)

☐ Other _____

FEES

The RCE fee under 37 CFR 1.17(e) is required by 37 CFR 1.114 when the RCE is filed.

☐ The Director is hereby authorized to charge any underpayment of fees, or credit any overpayments, to Deposit Account No _____

SIGNATURE OF APPLICANT, ATTORNEY, OR AGENT REQUIRED

☒ Patent Practitioner Signature

☐ Applicant Signature

PTO/SB/30EFS (07-09)
Approved for use through 07/31/2012. OMB 0651-0031
U.S. Patent and Trademark Office; U.S. DEPARTMENT OF COMMERCE

Under the Paperwork Reduction Act of 1995, no persons are required to respond to a collection of information unless it contains a valid OMB control number.

Signature of Registered U.S. Patent Practitioner			
Signature		Date (YYYY-MM-DD)	2012-09-10
Name	Howard J. Yuan	Registration Number	67985

This collection of information is required by 37 CFR 1.114. The information is required to obtain or retain a benefit by the public which is to file (and by the USPTO to process) an application. Confidentiality is governed by 35 U.S.C. 122 and 37 CFR 1.11 and 1.14. This collection is estimated to take 12 minutes to complete, including gathering, preparing, and submitting the completed application form to the USPTO. Time will vary depending upon the individual case. Any comments on the amount of time you require to complete this form and/or suggestions for reducing this burden, should be sent to the Chief Information Officer, U.S. Patent and Trademark Office, U.S. Department of Commerce, P.O. Box 1450, Alexandria, VA 22313-1450.

If you need assistance in completing the form, call 1-800-PTO-9199 and select option 2.

IN THE UNITED STATES PATENT AND TRADEMARK OFFICE

In re the Application of:	Examiner: WEISS, Howard
Dr. Gregory C. Burnett	Confirmation No.: 1204
Application Serial No.: 12/139,333	Group Art Unit: 2814
Filing Date: June 13, 2008	Transmission Date: September 10, 2012
For: DUAL OMNIDIRECTIONAL MICROPHONE ARRAY (DOMA)	Atty. Docket No.: ALI-050A

Certificate of Transmission
I hereby certify that this correspondence is being transmitted via the U.S. Patent and Trademark Office (USPTO) electronic filing system (EFS-Web) to the USPTO on **September 10, 2012**

Signed: Jessica Nghiem
Jessica L. Nghiem

WRITTEN ASSERTION FOR NOTIFICATION OF ENTITLEMENT TO SMALL ENTITY STATUS UNDER 37 CFR § 1.27(c)(1)

Dear Sir or Madam:

In accordance with 37 CFR § 1.27(c)(1), Applicant is submitting this written assertion for notification of entitlement to small entity status in the above-referenced patent. This written assertion is intended to notify the Office of Applicant's entitlement to small entity status.

Please contact the undersigned representative below if you have any questions or require any additional information.

Respectfully submitted,

Howard J. Yuan
Reg. No. 67,985

KOKKA & BACKUS, PC
703 High Street
Palo Alto, CA 94301
Tel.: (650) 566-9917
Fax: (650) 566-9922

IN THE UNITED STATES PATENT AND TRADEMARK OFFICE

In re the Application of:
Dr. Gregory C. Burnett

Application Serial No.: 12/139,333

Filing Date: June 13, 2008

For: DUAL OMNIDIRECTIONAL MICROPHONE ARRAY (DOMA)

Examiner: WEISS, Howard

Group Art Unit: 2814

Confirmation No.: 1204

Date: September 10, 2012

Atty. Docket No.: ALI-050A

CERTIFICATE OF TRANSMISSION

I hereby certify that this correspondence is being transmitted via the U.S Patent and Trademark Office electronic filing system (EFS-Web) to the USPTO on **September 10, 2012**.
Signed: Jessica Nghiem
Jessica L. Nghiem

AMENDMENT B

Dear Sir or Madam:

Please find enclosed a complete, updated claim listing and remarks in response to the Final Office Action mailed April 10, 2012.

CLAIM LISTING

Please amend claims 1, 4-7, 23, 25-30, 32-35, 42, 43, 45, and 47 as indicated below. Please cancel claims 24 and 44.

1. (Currently amended) A microphone array comprising:

a first virtual microphone comprising a first combination of a first microphone signal and a second microphone signal, the first virtual microphone having a first linear response to speech and a first linear response to noise, the first linear response to speech being substantially similar across a plurality of frequencies for a speech source located at an ~~within a predetermined~~ angle relative to an axis of the microphone array, wherein the first microphone signal is generated by a first physical microphone and the second microphone signal is generated by a second physical microphone; and

a second virtual microphone comprising a second combination of the first microphone signal and the second microphone signal, the second virtual microphone having a second linear response to speech and a second linear response to noise, the second linear response to noise being substantially similar to the first linear response to noise, and the second linear response to speech being substantially dissimilar to the first linear response to speech,

wherein at least one of the first linear response to noise and the second linear response to is being non-zero in a direction towards a source of noise~~the second combination is different from the first combination, wherein the first virtual microphone and the second virtual microphone are distinct virtual directional microphones with substantially similar responses to noise and substantially dissimilar responses to speech~~.

2. (Currently amended) The microphone array of claim 1, wherein the first and second physical microphones are omnidirectional.

3. (Previously presented) The microphone array of claim 1, wherein the first linear response to speech is devoid of a null, wherein the speech is human speech.

4. (Currently amended) The microphone array of claim 3, wherein the second linear response to speech of the second virtual microphone ~~has a second linear response to speech that~~ includes a single null oriented in a direction toward a source of the speech.

5. (Currently amended) The microphone array of claim 4, wherein the single null is a region of the second linear response to speech having a measured response level that is lower than the measured response level of any other region of the second linear response to speech.

6. (Currently amended) The microphone array of claim 4, wherein the second linear response to speech includes a primary lobe oriented in a direction away from the source of the speech.

7. (Currently amended) The microphone array of claim 6, wherein the primary lobe is a region of the second linear response to speech having a measured response level that is greater than the measured response level of any other region of the second linear response to speech.

8. (Original) The microphone array of claim 4, wherein the first physical microphone and the second physical microphone are positioned along an axis and separated by a first distance.

9. (Previously presented) The microphone array of claim 8, wherein a midpoint of the axis is a second distance from the speech source that generates the speech, wherein the speech source is located in a direction defined by an angle relative to the midpoint.

10. (Original) The microphone array of claim 9, wherein the first virtual microphone comprises the second microphone signal subtracted from the first microphone signal.

11. (Original) The microphone array of claim 10, wherein the first microphone signal is delayed.

12. (Original) The microphone array of claim 11, wherein the delay is raised to a power that is proportional to a time difference between arrival of the speech at the first virtual microphone and arrival of the speech at the second virtual microphone.

13. (Original) The microphone array of claim 11, wherein the delay is raised to a power that is proportional to a sampling frequency multiplied by a quantity equal to a third distance subtracted from a fourth distance, the third distance being between the first physical microphone and the speech source and the fourth distance being between the second physical microphone and the speech source.

14. (Original) The microphone array of claim 10, wherein the second microphone signal is multiplied by a ratio, wherein the ratio is a ratio of a third distance to a fourth distance, the third

distance being between the first physical microphone and the speech source and the fourth distance being between the second physical microphone and the speech source.

15. (Original) The microphone array of claim 9, wherein the second virtual microphone comprises the first microphone signal subtracted from the second microphone signal.

16. (Original) The microphone array of claim 15, wherein the first microphone signal is delayed.

17. (Original) The microphone array of claim 16, wherein the delay is raised to a power that is proportional to a time difference between arrival of the speech at the first virtual microphone and arrival of the speech at the second virtual microphone.

18. (Original) The microphone array of claim 16, wherein the power is proportional to a sampling frequency multiplied by a quantity equal to a third distance subtracted from a fourth distance, the third distance being between the first physical microphone and the speech source and the fourth distance being between the second physical microphone and the speech source.

19. (Original) The microphone array of claim 18, wherein the first microphone signal is multiplied by a ratio, wherein the ratio is a ratio of the third distance to the fourth distance.

20. (Original) The microphone array of claim 4, wherein the single null is located at a distance from at least one of the first physical microphone and the second physical microphone where the source of the speech is expected to be.

21. (Original) The microphone array of claim 1, wherein the first virtual microphone comprises the second microphone signal subtracted from a delayed version of the first microphone signal.

22. (Original) The microphone array of claim 21, wherein the second virtual microphone comprises a delayed version of the first microphone signal subtracted from the second microphone signal.

23. (Currently amended) A microphone array comprising:

a first virtual microphone formed from a first combination of a first microphone signal and a second microphone signal, wherein the first microphone signal is generated by a first omnidirectional microphone and the second microphone signal is generated by a second omnidirectional microphone; and

a second virtual microphone formed from a second combination of the first microphone signal and the second microphone signal, wherein the second combination is different from the first combination;

wherein the first virtual microphone has a first linear response to speech that is substantially similar across a plurality of frequencies for a speech source within a predetermined angle relative to an axis of the microphone array and devoid of a null<u>, and a first linear response to noise that is devoid of a null</u>, wherein the second virtual microphone has a second linear response to speech that has a single null oriented in a direction toward a source of the speech<u> and a second linear response to noise that is devoid of a null, wherein the second linear response to noise is substantially similar to the first linear response to noise and the second linear response to</u>

speech is substantially dissimilar to the first linear response to speech, wherein the speech is human speech.

24. (Cancelled) ~~The microphone array of claim 23, wherein the first virtual microphone and the second virtual microphone have a linear response to noise that is substantially similar.~~

25. (Currently amended) The microphone array of claim 23, wherein the single null is a region of the second linear response to speech having a measured response level that is lower than the measured response level of any other region of the second linear response to speech.

26. (Currently amended) The microphone array of claim 23, wherein the second linear response to speech includes a primary lobe oriented in a direction away from the source of the speech.

27. (Currently amended) The microphone array of claim 26, wherein the primary lobe is a region of the second linear response to speech having a measured response level that is greater than the measured response level of any other region of the second linear response to speech.

28. (Currently amended) A device comprising:

a first microphone outputting a first microphone signal and a second microphone outputting a second microphone signal; and

a processing component coupled to the first microphone signal and the second microphone signal, the processing component generating a virtual microphone array comprising a first virtual microphone and a second virtual microphone, wherein the first virtual microphone comprises a first combination of the first microphone signal and the second microphone signal, wherein the second virtual microphone comprises a second combination of the first microphone signal and the second microphone signal, wherein the second combination is different from the first combination, ~~wherein the first virtual microphone and the second virtual microphone have substantially similar responses to noise and substantially dissimilar responses to speech,~~ the first virtual microphone having a first linear response to speech and a first linear response to noise, the first linear response to speech being substantially similar across a plurality of frequencies for a speech source at an ~~within a predetermined~~ angle relative to an axis of the microphone array[[.]], the second virtual microphone having a second linear response to speech and a second linear response to noise, the second linear response to noise being substantially similar to the first linear response to noise, and the second linear response to speech being substantially dissimilar to the first linear response to speech,

wherein one of the first linear response to speech and the second linear response to speech is reduced in a direction towards a source of speech.

29. (Currently amended) A device comprising:

a first microphone outputting a first microphone signal and a second microphone outputting a second microphone signal, wherein the first microphone and the second microphone are omnidirectional microphones; and

a virtual microphone array comprising a first virtual microphone and a second virtual microphone, the first virtual microphone having a first linear response to speech <u>based on distances from a first physical microphone and a second physical microphone to a source of speech, and a first linear response to noise</u>, the first linear response <u>to speech</u> being substantially similar across a plurality of frequencies for a speech source within a predetermined angle relative to an axis of the microphone array, <u>the second virtual microphone having a second linear response to speech and a second linear response to noise, the second linear response to noise being substantially similar to the first linear response to noise, and the second linear response to speech being substantially dissimilar to the first linear response to speech,</u>

<u>wherein the distances form a ratio with which to direct the first and second linear responses to speech toward the source of speech,</u>

wherein the first virtual microphone comprises a first combination of the first microphone signal and the second microphone signal,

wherein the second virtual microphone comprises a second combination of the first microphone signal and the second microphone signal,

wherein the second combination is different from the first combination,

wherein the first virtual microphone and the second virtual microphone are distinct virtual directional microphones.

30. (Currently amended) A device comprising:

a first physical microphone generating a first microphone signal;

a second physical microphone generating a second microphone signal; and

a processing component coupled to the first microphone signal and the second microphone signal, the processing component generating a virtual microphone array comprising a first virtual microphone and a second virtual microphone, the first virtual microphone having a first linear response to speech and a first linear response to noise, the first linear response to speech being substantially similar across a plurality of frequencies for a speech source at an ~~within a predetermined~~ angle relative to an axis of the microphone array, the second virtual microphone having a second linear response to speech and a second linear response to noise, the second linear response to noise being substantially similar to the first linear response to noise, and the second linear response to speech being substantially dissimilar to the first linear response to speech,

wherein at least one of the first linear response to noise and the second linear response to noise is non-zero in a direction towards a source of noise,

wherein the first virtual microphone comprises the second microphone signal subtracted from a delayed version of the first microphone signal[[;]],

wherein the second virtual microphone comprises a delayed version of the first microphone signal subtracted from the second microphone signal.

31. (Previously presented) The device of claim 30, wherein the first linear response to speech is devoid of a null, wherein the speech is human speech.

32. (Currently amended) The device of claim 31, wherein the second linear response to speech of the second virtual microphone ~~has a second linear response to speech that~~ includes a single null oriented in a direction toward a source of the speech.

33. (Currently amended) The device of claim 32, wherein the single null is a region of the second linear response to speech having a measured response level that is lower than the measured response level of any other region of the second linear response to speech.

34. (Currently amended) The device of claim 32, wherein the second linear response to speech includes a primary lobe oriented in a direction away from the source of the speech.

35. (Currently amended) The device of claim 34, wherein the primary lobe is a region of the second linear response to speech having a measured response level that is greater than the measured response level of any other region of the second linear response to speech.

36. (Original) The device of claim 32, wherein the first physical microphone and the second physical microphone are positioned along an axis and separated by a first distance.

37. (Previously presented) The device of claim 36, wherein a midpoint of the axis is a second distance from the speech source that generates the speech, wherein the speech source is located in a direction defined by an angle relative to the midpoint.

38. (Original) The device of claim 37, wherein one or more of the first microphone signal and the second microphone signal is delayed.

39. (Original) The device of claim 38, wherein the delay is raised to a power that is proportional to a time difference between arrival of the speech at the first virtual microphone and arrival of the speech at the second virtual microphone.

40. (Original) The device of claim 39, wherein the power is proportional to a sampling frequency multiplied by a quantity equal to a third distance subtracted from a fourth distance, the third distance being between the first physical microphone and the speech source and the fourth distance being between the second physical microphone and the speech source.

41. (Original) The device of claim 37, wherein one or more of the first microphone signal and the second microphone signal is multiplied by a gain factor.

42. (Currently amended) A sensor comprising:

a physical microphone array including a first physical microphone and a second physical microphone, the first physical microphone outputting a first microphone signal and the second physical microphone outputting a second microphone signal; and

a virtual microphone array comprising a first virtual microphone and a second virtual microphone, the first virtual microphone comprising a first combination of the first microphone signal and the second microphone signal and having a first linear response to speech and a first linear response to noise, the first linear response to speech being substantially similar across a plurality of frequencies for a source of speech at an ~~within a predetermined~~ angle relative to an axis of the microphone array, the second virtual microphone comprising a second combination of the first microphone signal and the second microphone signal and having a second linear

response to speech and a second linear response to noise, the second linear response to noise being substantially similar to the first linear response to noise and the second linear response to speech being substantially dissimilar to the first linear response to speech,

wherein one of the first linear response to speech and the second linear response to speech is reduced in a direction towards a source of speech~~the second combination is different from the first combination~~,

wherein the virtual microphone array includes a single null oriented in a direction toward the source of speech of a human speaker.

43. (Currently amended) The sensor of claim 42, wherein the first linear response to speech is devoid of a null, wherein the second linear response to speech of the second virtual microphone ~~has a second linear response to speech that~~ includes the single null.

44. (Cancelled) ~~The sensor of claim 43, wherein the first virtual microphone and the second virtual microphone have a linear response to noise that is substantially similar.~~

45. (Currently amended) The sensor of claim 43, wherein the single null is a region of the second linear response to speech having a measured response level that is lower than the measured response level of any other region of the second linear response to speech.

46. (Original) The sensor of claim 43, wherein the second linear response to speech includes a primary lobe oriented in a direction away from the source of the speech.

47. (Currently amended) The sensor of claim 46, wherein the primary lobe is a region of the second linear response to speech having a measured response level that is greater than the measured response level of any other region of the second linear response to speech.

48. (Original) The sensor of claim 42, wherein the single null is located at a distance from the physical microphone array where the source of the speech is expected to be.

REMARKS

Claims 1, 2, 4-7, 23, 25-30, 32-35, 42, 43, 45, and 47 have been amended to clarify the subject matter regarded as the invention. Claims 24 and 44 have been cancelled. Claims 1-23, 25-43, and 45-47 remain pending.

The Examiner has finally rejected claims 1, 2, 21, 22, and 30 under 35 U.S.C. §102(b) as being anticipated by U.S. Patent No. 5,473,701 ("Cezanne"). Claims 3-20, 23-29, and 31-48 were finally rejected under 35 U.S.C. §103(a) as being unpatentable over Cezanne in further view of U.S. Patent No. 7,386,135 ("Fan").

Claims 1-22, 23, 25-17, and 30-41

The rejections are respectfully traversed. As amended, claim 1 recites "...a first virtual microphone...having a first linear response to speech and a first linear response to noise...; and a second virtual microphone...having a second linear response to speech and a second linear response to noise, the second linear response to noise being substantially similar to the first linear response to noise, and the second linear response to speech being substantially dissimilar to the first linear response to speech, wherein at least one of the first linear response to noise and the second linear response to noise is non-zero in a direction towards a source of noise...." Neither Cezanne nor Fan disclose, teach, suggest, motivate, or otherwise describe a first virtual microphone having a first linear response to speech and a first linear response to noise, and a second virtual microphone having a second linear response to speech and a second linear response to noise, the second linear response to noise being substantially similar to the first linear response to noise, and the second linear response to speech being substantially dissimilar to the

first linear response to speech, wherein at least one of the first linear response to noise and the second linear response to noise is non-zero in a direction towards a source of noise.

Cezanne teaches away from the claimed subject matter and cannot be combined with any other cited references to obtain the claimed combinations set forth in the present application. In particular, Cezanne at most discloses "substantial alignment of the nulls with sources of noise to reduce microphone array output signal level due to noise." See, e.g., Summary of Invention for Cezanne (Column 2 Lines 3-5). Cezanne represents art divergent to the claimed invention. For example, the background section of the subject application describes the deficiencies found in Cezanne as the background section recites that: "conventional multi-microphone systems attempt to increase the SNR of the user's speech by 'steering' the nulls of the system to the strongest noise sources. This approach is limited in the number of noise sources removed by the number of available nulls." See Background (Paragraph [0004]) of subject application.

Accordingly, Cezanne, taken alone or in combination with any other cited reference, fails to teach or suggest each and every claimed element. For example, nowhere does Cezanne disclose or suggest "at least one of the first linear response to noise and the second linear response to noise is non-zero in a direction toward a source of noise." Thus, Applicants submit that claim 1 is allowable for the reasons stated above.

Claims 2-22 depends from claim 1 and are believed to be allowable for at least the same reasons described above.

Claims 23 and 30 have been amended similarly and are believed to be allowable for at least the same reasons described above. Claims 25-27 and 31-41 depend from claims 23 and 30, respectively, and are also believed to be allowable for at least the same reasons described above.

Claims 28 and 42, 43, and 45-48

As amended, claim 28 recites "...a first virtual microphone...having a first linear response to speech and a first linear response to noise...; and a second virtual microphone...having a second linear response to speech and a second linear response to noise, the second linear response to noise being substantially similar to the first linear response to noise, and the second linear response to speech being substantially dissimilar to the first linear response to speech, wherein one of the first linear response to speech and the second linear response to speech is reduced in a direction towards a source of speech...." Neither Cezanne nor Fan disclose, teach, suggest, motivate, or otherwise describe a first virtual microphone having a first linear response to speech and a first linear response to noise, and a second virtual microphone having a second linear response to speech and a second linear response to noise, the second linear response to noise being substantially similar to the first linear response to noise, and the second linear response to speech being substantially dissimilar to the first linear response to speech, wherein one of the first linear response to speech and the second linear response to speech is reduced in a direction towards a source of speech.

Further, Fan teaches generating cardioid beams using actual microphones. See e.g., Fan, Col. 5, Lines 6-13 ("...one element 202 in response to the presence of audio generates a cardioid beam and the other element 204, in response to the presence of audio generates an omni directional beam. In each of these embodiments, cardioid beam generating acoustic element (hereinafter, simply "mic")...." Nowhere does Fan teach or suggest a "a first virtual microphone...having a first linear response to speech and a first linear response to noise...; and a second virtual microphone...having a second linear response to speech and a second linear response to noise...." Thus, Applicants submit that claim 28 is allowable for the reasons stated above.

Claim 42 has been amended similarly and is believed to be allowable for at least the same reasons described above. Claims 43 and 45-48 depend from claim 42 and are also believed to be allowable for at least the same reasons described above.

Claim 29

As amended, claim 29 recites "...a first virtual microphone...having a first linear response to speech based on distances from a first physical microphone and a second physical microphone to a source of speech, and a first linear response to noise, the second virtual microphone having a second linear response to speech and a second linear response to noise, ...wherein the distances form a ratio with which to direct the first and second linear responses to speech toward the source of speech...."

Neither Cezanne nor Fan disclose, teach, suggest, motivate, or otherwise describe a first virtual microphone having a first linear response to speech based on distances from a first physical microphone and a second physical microphone to a source of speech, and a first linear response to noise, the second virtual microphone having a second linear response to speech and a second linear response to noise, wherein the distances form a ratio with which to direct the first and second linear responses to speech toward the source of speech. For example, Cezanne at most discloses a linear response to speech based on a ratio of front and back cardioid sensor signals. See e.g., Cezanne, Col. 7, Lines 3-28 ("...block average of the cross-product of back and front cardioid sensor signals is divided by the block average of the square of the back cardioid sensor signal. The result is the ratio, β...."). Thus, Applicants submit that claim 29 is allowable for the reasons stated above.

Reconsideration of the application and allowance of all claims are respectfully requested based on the preceding remarks. If at any time the Examiner believes that an interview would be helpful, please contact the undersigned.

Respectfully submitted,

Howard J. Yuan
Reg. No. 67,985

KOKKA & BACKUS, PC
703 High Street
Palo Alto, CA 94301-2447
Tel: (650) 566-9917
Fax: (650) 566-9922

Electronic Patent Application Fee Transmittal

Application Number:	12139333
Filing Date:	13-Jun-2008
Title of Invention:	Dual Omnidirectional Microphone Array (DOMA)
First Named Inventor/Applicant Name:	Gregory C. Burnett
Filer:	Howard J. Yuan/Jessica Nghiem
Attorney Docket Number:	ALI-050A

Filed as Small Entity

Utility under 35 USC 111(a) Filing Fees

Description	Fee Code	Quantity	Amount	Sub-Total in USD($)
Basic Filing:				
Pages:				
Claims:				
Miscellaneous-Filing:				
Petition:				
Patent-Appeals-and-Interference:				
Post-Allowance-and-Post-Issuance:				
Extension-of-Time:				
Extension - 2 months with $0 paid	2252	1	280	280

Description	Fee Code	Quantity	Amount	Sub-Total in USD($)
Miscellaneous:				
Request for continued examination	2801	1	465	465
		Total in USD ($)		**745**

Electronic Acknowledgement Receipt	
EFS ID:	13705487
Application Number:	12139333
International Application Number:	
Confirmation Number:	1204
Title of Invention:	Dual Omnidirectional Microphone Array (DOMA)
First Named Inventor/Applicant Name:	Gregory C. Burnett
Customer Number:	15516
Filer:	Howard J. Yuan
Filer Authorized By:	
Attorney Docket Number:	ALI-050A
Receipt Date:	10-SEP-2012
Filing Date:	13-JUN-2008
Time Stamp:	22:06:04
Application Type:	Utility under 35 USC 111(a)

Payment information:

Submitted with Payment	yes
Payment Type	Credit Card
Payment was successfully received in RAM	$745
RAM confirmation Number	8544
Deposit Account	
Authorized User	

File Listing:

Document Number	Document Description	File Name	File Size(Bytes)/ Message Digest	Multi Part /.zip	Pages (if appl.)

1		ALI-050A_Response_to_Final_Office_Action_asfiled.PDF	245925 a0d45cff607c63d16c7cf93c8d47937c7ddfc340	yes	22
	Multipart Description/PDF files in .zip description				
	Document Description		**Start**	**End**	
	Request for Continued Examination (RCE)		1	2	
	Transmittal Letter		3	3	
	Amendment After Final		4	22	
Warnings:					
Information:					
2	Fee Worksheet (SB06)	fee-info.pdf	32273 8068d39db50c24b2a92a810cf6ae7f80b6912081	no	2
Warnings:					
Information:					
		Total Files Size (in bytes):	278198		

This Acknowledgement Receipt evidences receipt on the noted date by the USPTO of the indicated documents, characterized by the applicant, and including page counts, where applicable. It serves as evidence of receipt similar to a Post Card, as described in MPEP 503.

New Applications Under 35 U.S.C. 111
If a new application is being filed and the application includes the necessary components for a filing date (see 37 CFR 1.53(b)-(d) and MPEP 506), a Filing Receipt (37 CFR 1.54) will be issued in due course and the date shown on this Acknowledgement Receipt will establish the filing date of the application.

National Stage of an International Application under 35 U.S.C. 371
If a timely submission to enter the national stage of an international application is compliant with the conditions of 35 U.S.C. 371 and other applicable requirements a Form PCT/DO/EO/903 indicating acceptance of the application as a national stage submission under 35 U.S.C. 371 will be issued in addition to the Filing Receipt, in due course.

New International Application Filed with the USPTO as a Receiving Office
If a new international application is being filed and the international application includes the necessary components for an international filing date (see PCT Article 11 and MPEP 1810), a Notification of the International Application Number and of the International Filing Date (Form PCT/RO/105) will be issued in due course, subject to prescriptions concerning national security, and the date shown on this Acknowledgement Receipt will establish the international filing date of the application.

PTO/SB/06 (07-06)
Approved for use through 1/31/2007. OMB 0651-0032
U.S. Patent and Trademark Office; U.S. DEPARTMENT OF COMMERCE
Under the Paperwork Reduction Act of 1995, no persons are required to respond to a collection of information unless it displays a valid OMB control number.

PATENT APPLICATION FEE DETERMINATION RECORD

Substitute for Form PTO-875

Application or Docket Number	Filing Date	
12/139,333	06/13/2008	☐ To be Mailed

APPLICATION AS FILED – PART I

FOR	(Column 1) NUMBER FILED	(Column 2) NUMBER EXTRA	SMALL ENTITY ☐ RATE ($)	SMALL ENTITY FEE ($)	OR	OTHER THAN SMALL ENTITY RATE ($)	OTHER THAN SMALL ENTITY FEE ($)
☐ BASIC FEE (37 CFR 1.16(a), (b), or (c))	N/A	N/A	N/A			N/A	
☐ SEARCH FEE (37 CFR 1.16(k), (i), or (m))	N/A	N/A	N/A			N/A	
☐ EXAMINATION FEE (37 CFR 1.16(o), (p), or (q))	N/A	N/A	N/A			N/A	
TOTAL CLAIMS (37 CFR 1.16(i))	minus 20 =	*	X $ =		OR	X $ =	
INDEPENDENT CLAIMS (37 CFR 1.16(h))	minus 3 =	*	X $ =			X $ =	
☐ APPLICATION SIZE FEE (37 CFR 1.16(s))	If the specification and drawings exceed 100 sheets of paper, the application size fee due is $250 ($125 for small entity) for each additional 50 sheets or fraction thereof. See 35 U.S.C. 41(a)(1)(G) and 37 CFR 1.16(s).						
☐ MULTIPLE DEPENDENT CLAIM PRESENT (37 CFR 1.16(j))							
* If the difference in column 1 is less than zero, enter "0" in column 2.			TOTAL			TOTAL	

APPLICATION AS AMENDED – PART II

AMENDMENT 09/10/2012

	(Column 1) CLAIMS REMAINING AFTER AMENDMENT		(Column 2) HIGHEST NUMBER PREVIOUSLY PAID FOR	(Column 3) PRESENT EXTRA	SMALL ENTITY RATE ($)	SMALL ENTITY ADDITIONAL FEE ($)	OR	OTHER THAN SMALL ENTITY RATE ($)	OTHER THAN SMALL ENTITY ADDITIONAL FEE ($)
Total (37 CFR 1.16(i))	* 46	Minus	** 48	= 0	X $ =		OR	X $60=	0
Independent (37 CFR 1.16(h))	* 6	Minus	***6	= 0	X $ =		OR	X $250=	0
☐ Application Size Fee (37 CFR 1.16(s))									
☐ FIRST PRESENTATION OF MULTIPLE DEPENDENT CLAIM (37 CFR 1.16(j))							OR		
					TOTAL ADD'L FEE		OR	TOTAL ADD'L FEE	0

AMENDMENT

	(Column 1) CLAIMS REMAINING AFTER AMENDMENT		(Column 2) HIGHEST NUMBER PREVIOUSLY PAID FOR	(Column 3) PRESENT EXTRA	RATE ($)	ADDITIONAL FEE ($)		RATE ($)	ADDITIONAL FEE ($)
Total (37 CFR 1.16(i))	*	Minus	**	=	X $ =		OR	X $ =	
Independent (37 CFR 1.16(h))	*	Minus	***	=	X $ =		OR	X $ =	
☐ Application Size Fee (37 CFR 1.16(s))									
☐ FIRST PRESENTATION OF MULTIPLE DEPENDENT CLAIM (37 CFR 1.16(j))							OR		
					TOTAL ADD'L FEE		OR	TOTAL ADD'L FEE	

* If the entry in column 1 is less than the entry in column 2, write "0" in column 3.
** If the "Highest Number Previously Paid For" IN THIS SPACE is less than 20, enter "20".
*** If the "Highest Number Previously Paid For" IN THIS SPACE is less than 3, enter "3".
The "Highest Number Previously Paid For" (Total or Independent) is the highest number found in the appropriate box in column 1.

Legal Instrument Examiner:
/CHRISTINE MOLLISH/

This collection of information is required by 37 CFR 1.16. The information is required to obtain or retain a benefit by the public which is to file (and by the USPTO to process) an application. Confidentiality is governed by 35 U.S.C. 122 and 37 CFR 1.14. This collection is estimated to take 12 minutes to complete, including gathering, preparing, and submitting the completed application form to the USPTO. Time will vary depending upon the individual case. Any comments on the amount of time you require to complete this form and/or suggestions for reducing this burden, should be sent to the Chief Information Officer, U.S. Patent and Trademark Office, U.S. Department of Commerce, P.O. Box 1450, Alexandria, VA 22313-1450. DO NOT SEND FEES OR COMPLETED FORMS TO THIS ADDRESS. **SEND TO: Commissioner for Patents, P.O. Box 1450, Alexandria, VA 22313-1450.**
If you need assistance in completing the form, call 1-800-PTO-9199 and select option 2.

UNITED STATES PATENT AND TRADEMARK OFFICE

UNITED STATES DEPARTMENT OF COMMERCE
United States Patent and Trademark Office
Address: COMMISSIONER FOR PATENTS
P.O. Box 1450
Alexandria, Virginia 22313-1450
www.uspto.gov

APPLICATION NO.	FILING DATE	FIRST NAMED INVENTOR	ATTORNEY DOCKET NO.	CONFIRMATION NO.
12/139,333	06/13/2008	Gregory C. Burnett	ALI-050A	1204

15516 7590 09/18/2012
Kokka & Backus, PC
703 High Street
Palo Alto, CA 94301

EXAMINER
WEISS, HOWARD

ART UNIT	PAPER NUMBER
2814	

MAIL DATE	DELIVERY MODE
09/18/2012	PAPER

Please find below and/or attached an Office communication concerning this application or proceeding.

The time period for reply, if any, is set in the attached communication.

PTOL-90A (Rev. 04/07)

Applicant-Initiated Interview Summary	Application No.	Applicant(s)	
	12/139,333	BURNETT, GREGORY C.	
	Examiner	Art Unit	
	HOWARD WEISS	2814	

All participants (applicant, applicant's representative, PTO personnel):

(1) *HOWARD WEISS*. (3)_____.

(2) *Howard J. Yuan*. (4)_____.

Date of Interview: *10 September 2012*.

Type: ☒ Telephonic ☐ Video Conference
☐ Personal [copy given to: ☐ applicant ☐ applicant's representative]

Exhibit shown or demonstration conducted: ☐ Yes ☒ No.
If Yes, brief description: _____.

Issues Discussed ☐101 ☐112 ☒102 ☐103 ☐Others
(For each of the checked box(es) above, please describe below the issue and detailed description of the discussion)

Claim(s) discussed: *1*.

Identification of prior art discussed: *Cezanne et al.*.

Substance of Interview
(For each issue discussed, provide a detailed description and indicate if agreement was reached. Some topics may include: identification or clarification of a reference or a portion thereof, claim interpretation, proposed amendments, arguments of any applied references etc...)

Mr. Yuan proposed three (3) types of amendments to the claims. The Examiner agreed that these amendments would overcome the rejections based upon the prior art. Mr. Yuan will submit the amendments in an RCE. .

Applicant recordation instructions: The formal written reply to the last Office action must include the substance of the interview. (See MPEP section 713.04). If a reply to the last Office action has already been filed, applicant is given a non-extendable period of the longer of one month or thirty days from this interview date, or the mailing date of this interview summary form, whichever is later, to file a statement of the substance of the interview

Examiner recordation instructions: Examiners must summarize the substance of any interview of record. A complete and proper recordation of the substance of an interview should include the items listed in MPEP 713.04 for complete and proper recordation including the identification of the general thrust of each argument or issue discussed, a general indication of any other pertinent matters discussed regarding patentability and the general results or outcome of the interview, to include an indication as to whether or not agreement was reached on the issues raised.

☐ Attachment

/Howard Weiss/ Primary Examiner Art Unit 2814	

Summary of Record of Interview Requirements

Manual of Patent Examining Procedure (MPEP), Section 713.04, Substance of Interview Must be Made of Record
A complete written statement as to the substance of any face-to-face, video conference, or telephone interview with regard to an application must be made of record in the application whether or not an agreement with the examiner was reached at the interview.

Title 37 Code of Federal Regulations (CFR) § 1.133 Interviews
Paragraph (b)

In every instance where reconsideration is requested in view of an interview with an examiner, a complete written statement of the reasons presented at the interview as warranting favorable action must be filed by the applicant. An interview does not remove the necessity for reply to Office action as specified in §§ 1.111, 1.135. (35 U.S.C. 132)

37 CFR §1.2 Business to be transacted in writing.
All business with the Patent or Trademark Office should be transacted in writing. The personal attendance of applicants or their attorneys or agents at the Patent and Trademark Office is unnecessary. The action of the Patent and Trademark Office will be based exclusively on the written record in the Office. No attention will be paid to any alleged oral promise, stipulation, or understanding in relation to which there is disagreement or doubt.

The action of the Patent and Trademark Office cannot be based exclusively on the written record in the Office if that record is itself incomplete through the failure to record the substance of interviews.

It is the responsibility of the applicant or the attorney or agent to make the substance of an interview of record in the application file, unless the examiner indicates he or she will do so. It is the examiner's responsibility to see that such a record is made and to correct material inaccuracies which bear directly on the question of patentability.

Examiners must complete an Interview Summary Form for each interview held where a matter of substance has been discussed during the interview by checking the appropriate boxes and filling in the blanks. Discussions regarding only procedural matters, directed solely to restriction requirements for which interview recordation is otherwise provided for in Section 812.01 of the Manual of Patent Examining Procedure, or pointing out typographical errors or unreadable script in Office actions or the like, are excluded from the interview recordation procedures below. Where the substance of an interview is completely recorded in an Examiners Amendment, no separate Interview Summary Record is required.

The Interview Summary Form shall be given an appropriate Paper No., placed in the right hand portion of the file, and listed on the "Contents" section of the file wrapper. In a personal interview, a duplicate of the Form is given to the applicant (or attorney or agent) at the conclusion of the interview. In the case of a telephone or video-conference interview, the copy is mailed to the applicant's correspondence address either with or prior to the next official communication. If additional correspondence from the examiner is not likely before an allowance or if other circumstances dictate, the Form should be mailed promptly after the interview rather than with the next official communication.

The Form provides for recordation of the following information:
- Application Number (Series Code and Serial Number)
- Name of applicant
- Name of examiner
- Date of interview
- Type of interview (telephonic, video-conference, or personal)
- Name of participant(s) (applicant, attorney or agent, examiner, other PTO personnel, etc.)
- An indication whether or not an exhibit was shown or a demonstration conducted
- An identification of the specific prior art discussed
- An indication whether an agreement was reached and if so, a description of the general nature of the agreement (may be by attachment of a copy of amendments or claims agreed as being allowable). Note: Agreement as to allowability is tentative and does not restrict further action by the examiner to the contrary.
- The signature of the examiner who conducted the interview (if Form is not an attachment to a signed Office action)

It is desirable that the examiner orally remind the applicant of his or her obligation to record the substance of the interview of each case. It should be noted, however, that the Interview Summary Form will not normally be considered a complete and proper recordation of the interview unless it includes, or is supplemented by the applicant or the examiner to include, all of the applicable items required below concerning the substance of the interview.

A complete and proper recordation of the substance of any interview should include at least the following applicable items:
1) A brief description of the nature of any exhibit shown or any demonstration conducted,
2) an identification of the claims discussed,
3) an identification of the specific prior art discussed,
4) an identification of the principal proposed amendments of a substantive nature discussed, unless these are already described on the Interview Summary Form completed by the Examiner,
5) a brief identification of the general thrust of the principal arguments presented to the examiner,
   (The identification of arguments need not be lengthy or elaborate. A verbatim or highly detailed description of the arguments is not required. The identification of the arguments is sufficient if the general nature or thrust of the principal arguments made to the examiner can be understood in the context of the application file. Of course, the applicant may desire to emphasize and fully describe those arguments which he or she feels were or might be persuasive to the examiner.)
6) a general indication of any other pertinent matters discussed, and
7) if appropriate, the general results or outcome of the interview unless already described in the Interview Summary Form completed by the examiner.

Examiners are expected to carefully review the applicant's record of the substance of an interview. If the record is not complete and accurate, the examiner will give the applicant an extendable one month time period to correct the record.

Examiner to Check for Accuracy

If the claims are allowable for other reasons of record, the examiner should send a letter setting forth the examiner's version of the statement attributed to him or her. If the record is complete and accurate, the examiner should place the indication, "Interview Record OK" on the paper recording the substance of the interview along with the date and the examiner's initials.

UNITED STATES PATENT AND TRADEMARK OFFICE

UNITED STATES DEPARTMENT OF COMMERCE
United States Patent and Trademark Office
Address: COMMISSIONER FOR PATENTS
P.O. Box 1450
Alexandria, Virginia 22313-1450
www.uspto.gov

NOTICE OF ALLOWANCE AND FEE(S) DUE

15516 7590 04/04/2013
Kokka & Backus, PC
703 High Street
Palo Alto, CA 94301

EXAMINER
WEISS, HOWARD

ART UNIT	PAPER NUMBER
2814	

DATE MAILED: 04/04/2013

APPLICATION NO.	FILING DATE	FIRST NAMED INVENTOR	ATTORNEY DOCKET NO.	CONFIRMATION NO.
12/139,333	06/13/2008	Gregory C. Burnett	ALI-050A	1204

TITLE OF INVENTION: VIRTUAL MICROPHONE ARRAYS USING DUAL OMNIDIRECTIONAL MICROPHONE ARRAY (DOMA)

APPLN. TYPE	ENTITY STATUS	ISSUE FEE DUE	PUBLICATION FEE DUE	PREV. PAID ISSUE FEE	TOTAL FEE(S) DUE	DATE DUE
nonprovisional	UNDISCOUNTED	$1780	$300	$0	$2080	07/05/2013

THE APPLICATION IDENTIFIED ABOVE HAS BEEN EXAMINED AND IS ALLOWED FOR ISSUANCE AS A PATENT. PROSECUTION ON THE MERITS IS CLOSED. THIS NOTICE OF ALLOWANCE IS NOT A GRANT OF PATENT RIGHTS. THIS APPLICATION IS SUBJECT TO WITHDRAWAL FROM ISSUE AT THE INITIATIVE OF THE OFFICE OR UPON PETITION BY THE APPLICANT. SEE 37 CFR 1.313 AND MPEP 1308.

THE ISSUE FEE AND PUBLICATION FEE (IF REQUIRED) MUST BE PAID WITHIN THREE MONTHS FROM THE MAILING DATE OF THIS NOTICE OR THIS APPLICATION SHALL BE REGARDED AS ABANDONED. THIS STATUTORY PERIOD CANNOT BE EXTENDED. SEE 35 U.S.C. 151. THE ISSUE FEE DUE INDICATED ABOVE DOES NOT REFLECT A CREDIT FOR ANY PREVIOUSLY PAID ISSUE FEE IN THIS APPLICATION. IF AN ISSUE FEE HAS PREVIOUSLY BEEN PAID IN THIS APPLICATION (AS SHOWN ABOVE), THE RETURN OF PART B OF THIS FORM WILL BE CONSIDERED A REQUEST TO REAPPLY THE PREVIOUSLY PAID ISSUE FEE TOWARD THE ISSUE FEE NOW DUE.

HOW TO REPLY TO THIS NOTICE:

I. Review the ENTITY STATUS shown above. If the ENTITY STATUS is shown as SMALL or MICRO, verify whether entitlement to that entity status still applies.

If the ENTITY STATUS is the same as shown above, pay the TOTAL FEE(S) DUE shown above.

If the ENTITY STATUS is changed from that shown above, on PART B - FEE(S) TRANSMITTAL, complete section number 5 titled "Change in Entity Status (from status indicated above)".

For purposes of this notice, small entity fees are 1/2 the amount of undiscounted fees, and micro entity fees are 1/2 the amount of small entity fees.

II. PART B - FEE(S) TRANSMITTAL, or its equivalent, must be completed and returned to the United States Patent and Trademark Office (USPTO) with your ISSUE FEE and PUBLICATION FEE (if required). If you are charging the fee(s) to your deposit account, section "4b" of Part B - Fee(s) Transmittal should be completed and an extra copy of the form should be submitted. If an equivalent of Part B is filed, a request to reapply a previously paid issue fee must be clearly made, and delays in processing may occur due to the difficulty in recognizing the paper as an equivalent of Part B.

III. All communications regarding this application must give the application number. Please direct all communications prior to issuance to Mail Stop ISSUE FEE unless advised to the contrary.

IMPORTANT REMINDER: Utility patents issuing on applications filed on or after Dec. 12, 1980 may require payment of maintenance fees. It is patentee's responsibility to ensure timely payment of maintenance fees when due.

PTOL-85 (Rev. 02/11)

PART B - FEE(S) TRANSMITTAL

Complete and send this form, together with applicable fee(s), to: Mail **Mail Stop ISSUE FEE**
Commissioner for Patents
P.O. Box 1450
Alexandria, Virginia 22313-1450
or Fax (571)-273-2885

INSTRUCTIONS: This form should be used for transmitting the ISSUE FEE and PUBLICATION FEE (if required). Blocks 1 through 5 should be completed where appropriate. All further correspondence including the Patent, advance orders and notification of maintenance fees will be mailed to the current correspondence address as indicated unless corrected below or directed otherwise in Block 1, by (a) specifying a new correspondence address; and/or (b) indicating a separate "FEE ADDRESS" for maintenance fee notifications.

CURRENT CORRESPONDENCE ADDRESS (Note: Use Block 1 for any change of address)

15516 7590 04/04/2013
Kokka & Backus, PC
703 High Street
Palo Alto, CA 94301

Note: A certificate of mailing can only be used for domestic mailings of the Fee(s) Transmittal. This certificate cannot be used for any other accompanying papers. Each additional paper, such as an assignment or formal drawing, must have its own certificate of mailing or transmission.

Certificate of Mailing or Transmission
I hereby certify that this Fee(s) Transmittal is being deposited with the United States Postal Service with sufficient postage for first class mail in an envelope addressed to the Mail Stop ISSUE FEE address above, or being facsimile transmitted to the USPTO (571) 273-2885, on the date indicated below.

(Depositor's name)
(Signature)
(Date)

APPLICATION NO.	FILING DATE	FIRST NAMED INVENTOR	ATTORNEY DOCKET NO.	CONFIRMATION NO.
12/139,333	06/13/2008	Gregory C. Burnett	ALI-050A	1204

TITLE OF INVENTION: VIRTUAL MICROPHONE ARRAYS USING DUAL OMNIDIRECTIONAL MICROPHONE ARRAY (DOMA)

APPLN. TYPE	ENTITY STATUS	ISSUE FEE DUE	PUBLICATION FEE DUE	PREV. PAID ISSUE FEE	TOTAL FEE(S) DUE	DATE DUE
nonprovisional	UNDISCOUNTED	$1780	$300	$0	$2080	07/05/2013

EXAMINER	ART UNIT	CLASS-SUBCLASS
WEISS, HOWARD	2814	381-092000

1. Change of correspondence address or indication of "Fee Address" (37 CFR 1.363).
- ❑ Change of correspondence address (or Change of Correspondence Address form PTO/SB/122) attached.
- ❑ "Fee Address" indication (or "Fee Address" Indication form PTO/SB/47; Rev 03-02 or more recent) attached. **Use of a Customer Number is required.**

2. For printing on the patent front page, list
(1) the names of up to 3 registered patent attorneys or agents OR, alternatively,
(2) the name of a single firm (having as a member a registered attorney or agent) and the names of up to 2 registered patent attorneys or agents. If no name is listed, no name will be printed.

1_____
2_____
3_____

3. ASSIGNEE NAME AND RESIDENCE DATA TO BE PRINTED ON THE PATENT (print or type)

PLEASE NOTE: Unless an assignee is identified below, no assignee data will appear on the patent. If an assignee is identified below, the document has been filed for recordation as set forth in 37 CFR 3.11. Completion of this form is NOT a substitute for filing an assignment.

(A) NAME OF ASSIGNEE (B) RESIDENCE: (CITY and STATE OR COUNTRY)

Please check the appropriate assignee category or categories (will not be printed on the patent) : ❑ Individual ❑ Corporation or other private group entity ❑ Government

4a. The following fee(s) are submitted:
- ❑ Issue Fee
- ❑ Publication Fee (No small entity discount permitted)
- ❑ Advance Order - # of Copies _____

4b. Payment of Fee(s): (**Please first reapply any previously paid issue fee shown above**)
- ❑ A check is enclosed.
- ❑ Payment by credit card. Form PTO-2038 is attached.
- ❑ The Director is hereby authorized to charge the required fee(s), any deficiency, or credit any overpayment, to Deposit Account Number _____ (enclose an extra copy of this form).

5. **Change in Entity Status** (from status indicated above)

❑ Applicant certifying micro entity status. See 37 CFR 1.29	NOTE: Absent a valid certification of Micro Entity Status (see form PTO/SB/15A and 15B), issue fee payment in the micro entity amount will not be accepted at the risk of application abandonment.
❑ Applicant asserting small entity status. See 37 CFR 1.27	NOTE: If the application was previously under micro entity status, checking this box will be taken to be a notification of loss of entitlement to micro entity status.
❑ Applicant changing to regular undiscounted fee status.	NOTE: Checking this box will be taken to be a notification of loss of entitlement to small or micro entity status, as applicable.

NOTE: The Issue Fee and Publication Fee (if required) will not be accepted from anyone other than the applicant; a registered attorney or agent; or the assignee or other party in interest as shown by the records of the United States Patent and Trademark Office.

Authorized Signature _____ Date _____

Typed or printed name _____ Registration No. _____

This collection of information is required by 37 CFR 1.311. The information is required to obtain or retain a benefit by the public which is to file (and by the USPTO to process) an application. Confidentiality is governed by 35 U.S.C. 122 and 37 CFR 1.14. This collection is estimated to take 12 minutes to complete, including gathering, preparing, and submitting the completed application form to the USPTO. Time will vary depending upon the individual case. Any comments on the amount of time you require to complete this form and/or suggestions for reducing this burden, should be sent to the Chief Information Officer, U.S. Patent and Trademark Office, U.S. Department of Commerce, P.O. Box 1450, Alexandria, Virginia 22313-1450. DO NOT SEND FEES OR COMPLETED FORMS TO THIS ADDRESS. SEND TO: Commissioner for Patents, P.O. Box 1450, Alexandria, Virginia 22313-1450.

Under the Paperwork Reduction Act of 1995, no persons are required to respond to a collection of information unless it displays a valid OMB control number.

UNITED STATES PATENT AND TRADEMARK OFFICE

UNITED STATES DEPARTMENT OF COMMERCE
United States Patent and Trademark Office
Address: COMMISSIONER FOR PATENTS
P.O. Box 1450
Alexandria, Virginia 22313-1450
www.uspto.gov

APPLICATION NO.	FILING DATE	FIRST NAMED INVENTOR	ATTORNEY DOCKET NO.	CONFIRMATION NO.
12/139,333	06/13/2008	Gregory C. Burnett	ALI-050A	1204

15516 7590 04/04/2013
Kokka & Backus, PC
703 High Street
Palo Alto, CA 94301

EXAMINER
WEISS, HOWARD

ART UNIT	PAPER NUMBER
2814	

DATE MAILED: 04/04/2013

Determination of Patent Term Adjustment under 35 U.S.C. 154 (b)
(application filed on or after May 29, 2000)

The Patent Term Adjustment to date is 627 day(s). If the issue fee is paid on the date that is three months after the mailing date of this notice and the patent issues on the Tuesday before the date that is 28 weeks (six and a half months) after the mailing date of this notice, the Patent Term Adjustment will be 627 day(s).

If a Continued Prosecution Application (CPA) was filed in the above-identified application, the filing date that determines Patent Term Adjustment is the filing date of the most recent CPA.

Applicant will be able to obtain more detailed information by accessing the Patent Application Information Retrieval (PAIR) WEB site (http://pair.uspto.gov).

Any questions regarding the Patent Term Extension or Adjustment determination should be directed to the Office of Patent Legal Administration at (571)-272-7702. Questions relating to issue and publication fee payments should be directed to the Customer Service Center of the Office of Patent Publication at 1-(888)-786-0101 or (571)-272-4200.

Privacy Act Statement

The Privacy Act of 1974 (P.L. 93-579) requires that you be given certain information in connection with your submission of the attached form related to a patent application or patent. Accordingly, pursuant to the requirements of the Act, please be advised that: (1) the general authority for the collection of this information is 35 U.S.C. 2(b)(2); (2) furnishing of the information solicited is voluntary; and (3) the principal purpose for which the information is used by the U.S. Patent and Trademark Office is to process and/or examine your submission related to a patent application or patent. If you do not furnish the requested information, the U.S. Patent and Trademark Office may not be able to process and/or examine your submission, which may result in termination of proceedings or abandonment of the application or expiration of the patent.

The information provided by you in this form will be subject to the following routine uses:

1. The information on this form will be treated confidentially to the extent allowed under the Freedom of Information Act (5 U.S.C. 552) and the Privacy Act (5 U.S.C 552a). Records from this system of records may be disclosed to the Department of Justice to determine whether disclosure of these records is required by the Freedom of Information Act.
2. A record from this system of records may be disclosed, as a routine use, in the course of presenting evidence to a court, magistrate, or administrative tribunal, including disclosures to opposing counsel in the course of settlement negotiations.
3. A record in this system of records may be disclosed, as a routine use, to a Member of Congress submitting a request involving an individual, to whom the record pertains, when the individual has requested assistance from the Member with respect to the subject matter of the record.
4. A record in this system of records may be disclosed, as a routine use, to a contractor of the Agency having need for the information in order to perform a contract. Recipients of information shall be required to comply with the requirements of the Privacy Act of 1974, as amended, pursuant to 5 U.S.C. 552a(m).
5. A record related to an International Application filed under the Patent Cooperation Treaty in this system of records may be disclosed, as a routine use, to the International Bureau of the World Intellectual Property Organization, pursuant to the Patent Cooperation Treaty.
6. A record in this system of records may be disclosed, as a routine use, to another federal agency for purposes of National Security review (35 U.S.C. 181) and for review pursuant to the Atomic Energy Act (42 U.S.C. 218(c)).
7. A record from this system of records may be disclosed, as a routine use, to the Administrator, General Services, or his/her designee, during an inspection of records conducted by GSA as part of that agency's responsibility to recommend improvements in records management practices and programs, under authority of 44 U.S.C. 2904 and 2906. Such disclosure shall be made in accordance with the GSA regulations governing inspection of records for this purpose, and any other relevant (i.e., GSA or Commerce) directive. Such disclosure shall not be used to make determinations about individuals.
8. A record from this system of records may be disclosed, as a routine use, to the public after either publication of the application pursuant to 35 U.S.C. 122(b) or issuance of a patent pursuant to 35 U.S.C. 151. Further, a record may be disclosed, subject to the limitations of 37 CFR 1.14, as a routine use, to the public if the record was filed in an application which became abandoned or in which the proceedings were terminated and which application is referenced by either a published application, an application open to public inspection or an issued patent.
9. A record from this system of records may be disclosed, as a routine use, to a Federal, State, or local law enforcement agency, if the USPTO becomes aware of a violation or potential violation of law or regulation.

Notice of Allowability	Application No. 12/139,333	Applicant(s) BURNETT, GREGORY C.	
	Examiner HOWARD WEISS	Art Unit 2814	AIA (First Inventor to File) Status No

-- The MAILING DATE of this communication appears on the cover sheet with the correspondence address--

All claims being allowable, PROSECUTION ON THE MERITS IS (OR REMAINS) CLOSED in this application. If not included herewith (or previously mailed), a Notice of Allowance (PTOL-85) or other appropriate communication will be mailed in due course. **THIS NOTICE OF ALLOWABILITY IS NOT A GRANT OF PATENT RIGHTS.** This application is subject to withdrawal from issue at the initiative of the Office or upon petition by the applicant. See 37 CFR 1.313 and MPEP 1308.

1. ☒ This communication is responsive to *an RCE filde 9/10/12*.
   ☐ A declaration(s)/affidavit(s) under **37 CFR 1.130(b)** was/were filed on_____.
2. ☐ An election was made by the applicant in response to a restriction requirement set forth during the interview on _____; the restriction requirement and election have been incorporated into this action.
3. ☒ The allowed claim(s) is/are *1-23,25-43 and 45-48*. As a result of the allowed claim(s), you may be eligible to benefit from the **Patent Prosecution Highway** program at a participating intellectual property office for the corresponding application. For more information, please see http://www.uspto.gov/patents/init_events/pph/index.jsp or send an inquiry to PPHfeedback@uspto.gov .
4. ☐ Acknowledgment is made of a claim for foreign priority under 35 U.S.C. § 119(a)-(d) or (f).

   Certified copies:

   a) ☐ All b) ☐ Some *c) ☐ None of the:
   1. ☐ Certified copies of the priority documents have been received.
   2. ☐ Certified copies of the priority documents have been received in Application No. _____ .
   3. ☐ Copies of the certified copies of the priority documents have been received in this national stage application from the International Bureau (PCT Rule 17.2(a)).

   * Certified copies not received: _____.

   Interim copies:

   a) ☐ All b) ☐ Some c) ☐ None of the: Interim copies of the priority documents have been received.

Applicant has THREE MONTHS FROM THE "MAILING DATE" of this communication to file a reply complying with the requirements noted below. Failure to timely comply will result in ABANDONMENT of this application.
THIS THREE-MONTH PERIOD IS NOT EXTENDABLE.

5. ☐ CORRECTED DRAWINGS (as "replacement sheets") must be submitted.
   ☐ including changes required by the attached Examiner's Amendment / Comment or in the Office action of Paper No./Mail Date _____.

   Identifying indicia such as the application number (see 37 CFR 1.84(c)) should be written on the drawings in the front (not the back) of each sheet. Replacement sheet(s) should be labeled as such in the header according to 37 CFR 1.121(d).
6. ☐ DEPOSIT OF and/or INFORMATION about the deposit of BIOLOGICAL MATERIAL must be submitted. Note the attached Examiner's comment regarding REQUIREMENT FOR THE DEPOSIT OF BIOLOGICAL MATERIAL.

Attachment(s)

1. ☐ Notice of References Cited (PTO-892)
2. ☐ Information Disclosure Statements (PTO/SB/08), Paper No./Mail Date _____
3. ☐ Examiner's Comment Regarding Requirement for Deposit of Biological Material
4. ☐ Interview Summary (PTO-413), Paper No./Mail Date _____ .
5. ☒ Examiner's Amendment/Comment
6. ☒ Examiner's Statement of Reasons for Allowance
7. ☐ Other _____.

Attorney's Docket Number: ALPH.P035

Filing Date: 6/13/2008

Continuing Data: claims benefit of 60/934,551 (6/13/2007), 60/953,444 (8/1/2007), 60/954,712 (8/8/2007) and 61/045,377 (4/16/2008)

Claimed Foreign Priority Date: none

Applicant(s): Burnett

Examiner: Howard Weiss

Examiner's Amendment

1. An examiner's amendment to the record appears below. Should the changes and/or additions be unacceptable to applicant, an amendment may be filed as provided by 37 CFR 1.312. To ensure consideration of such an amendment, it MUST be submitted no later than the payment of the issue fee.

2. The application has been amended as follows: the title has been changed to read --Virtual Microphone Arrays Using Dual Omnidirectional Microphone Array (DOMA)--.

Reasons for Allowance

3. The following is an examiner's statement of reasons for allowance: a dual virtual microphone array as claimed including having a linear response to both speech and noise could not be anticipated nor, in combination, be rendered obvious over the prior art of record.

   Any comments considered necessary by applicant must be submitted no later than the payment of the issue fee and, to avoid processing delays, should preferably accompany the issue fee. Such submissions should be clearly labeled "Comments on Statement of Reasons for Allowance."

Conclusion

4. Papers related to this application may be submitted directly to Art Unit 2814 by facsimile transmission. The faxing of such papers must conform with the notice

published in the Official Gazette, 1096 OG 30 (15 November 1989). The Art Unit 2814 Fax Center number is **(571) 273-8300**. The Art Unit 2814 Fax Center is to be used only for papers related to Art Unit 2814 applications.

5. Any inquiry concerning this communication or earlier communications from the examiner should be directed to Howard Weiss at **(571) 272-1720** and between the hours of 7:00 AM to 3:00 PM (Eastern Standard Time) Monday through Friday or by e-mail via **Howard.Weiss@uspto.gov**. If attempts to reach the examiner by telephone are unsuccessful, the examiner's supervisor, Wael Fahmy, can be reached on **(571) 272-1705**.

6. Information regarding the status of an application may be obtained from the Patent Application Information Retrieval (PAIR) system. Status information for published applications may be obtained from either Private PAIR or Public PAIR. Status information for unpublished applications is available through Private PAIR only. For more information about the PAIR system, see http://pair-direct.uspto.gov. Should you have questions on access to the Private PAIR system, contact the Electronic Business Center (EBC) at **866-217-9197** (toll-free).

7. The following list is the Examiner's field of search for the present Office Action:

Field of Search	Date
U.S. Class / Subclass(es): 381/92, 94.7; 704/233, E21.004	Thru 4/1/2013
Other Documentation: none	
Electronic Database(s): EAST	Thru 4/1/2013

HW/hw
4 April 2013

/Howard Weiss/
Primary Examiner
Art Unit 2814

Search Notes	Application/Control No.	Applicant(s)/Patent Under Reexamination
	12139333	BURNETT, GREGORY C.
	Examiner	**Art Unit**
	HOWARD WEISS	2814

CPC- SEARCHED

Symbol	Date	Examiner

CPC COMBINATION SETS - SEARCHED

Symbol	Date	Examiner

US CLASSIFICATION SEARCHED

Class	Subclass	Date	Examiner
381	92, 94.7	7/7/2011	HW
704	233, E21.004	7/7/2011	HW
updated	updated	4/5/2012	HW
updated	updated	4/1/2013	HW

SEARCH NOTES

Search Notes	Date	Examiner
PLUS Analysis Report	7/1/2011	HW
EAST	7/7/2011	HW

INTERFERENCE SEARCH

US Class/ CPC Symbol	US Subclass / CPC Group	Date	Examiner
all	all (see printout)	4/1/2013	HW

Issue Classification	Application/Control No.	Applicant(s)/Patent Under Reexamination
	12139333	BURNETT, GREGORY C.
	Examiner	**Art Unit**
	HOWARD WEISS	2814

CPC		
Symbol	**Type**	**Version**

CPC Combination Sets				
Symbol	**Type**	**Set**	**Ranking**	**Version**

US ORIGINAL CLASSIFICATION		INTERNATIONAL CLASSIFICATION	
CLASS	**SUBCLASS**	**CLAIMED**	**NON-CLAIMED**
381	92	H 0 4 R 3 / 00	

CROSS REFERENCE(S)					
CLASS	**SUBCLASS (ONE SUBCLASS PER BLOCK)**				
381	94.7				
704	233	E21.004			

NONE		Total Claims Allowed:	
(Assistant Examiner)	(Date)	46	
/HOWARD WEISS/ Primary Examiner.Art Unit 2814	04/01/2013	O.G. Print Claim(s)	O.G. Print Figure
(Primary Examiner)	(Date)	1	5

Issue Classification	Application/Control No.	Applicant(s)/Patent Under Reexamination
	12139333	BURNETT, GREGORY C.
	Examiner	**Art Unit**
	HOWARD WEISS	2814

☒ Claims renumbered in the same order as presented by applicant ☐ CPA ☒ T.D. ☐ R.1.47

Final	Original	Final	Original	Final	Original	Final	Original	Final	Original	Final	Original	Final	Original	Final	Original

NONE (Assistant Examiner)	(Date)	**Total Claims Allowed:** 46	
/HOWARD WEISS/ Primary Examiner.Art Unit 2814 (Primary Examiner)	04/01/2013 (Date)	O.G. Print Claim(s) 1	O.G. Print Figure 5

U.S. Patent and Trademark Office Part of Paper No. 20130401

EAST Search History

EAST Search History (Prior Art)

Ref #	Hits	Search Query	DBs	Default Operator	Plurals	Time Stamp
L1	2281	(704/233,E21.004).CCLS.	US-PGPUB; USPAT; USOCR; FPRS; EPO; JPO; DERWENT; IBM_TDB	OR	OFF	2013/04/01 14:32
L2	275	(381/94.7).CCLS.	US-PGPUB; USPAT; USOCR; FPRS; EPO; JPO; DERWENT; IBM_TDB	OR	OFF	2013/04/01 14:32
L3	1317	(381/92).CCLS.	US-PGPUB; USPAT; USOCR; FPRS; EPO; JPO; DERWENT; IBM_TDB	OR	OFF	2013/04/01 14:32
L4	372	(L1 or L2 or L3) and @pd>"20120405"	US-PGPUB; USPAT; USOCR; FPRS; EPO; JPO; DERWENT; IBM_TDB	OR	OFF	2013/04/01 14:32

EAST Search History (Interference)

Ref #	Hits	Search Query	DBs	Default Operator	Plurals	Time Stamp
L5	0	((first virtual microphone) and (linear response) and (non zero)).clm.	US-PGPUB; USPAT; UPAD	ADJ	OFF	2013/04/01 14:39
L6	6	((first virtual microphone) and (linear response)).clm.	US-PGPUB; USPAT; UPAD	ADJ	OFF	2013/04/01 14:39
L7	23	burnett.in. and (virtual microphone)	US-PGPUB; USPAT; UPAD	ADJ	OFF	2013/04/01 14:41
L8	17	7 not 6	US-PGPUB; USPAT; UPAD	ADJ	OFF	2013/04/01 14:41

4/1/2013 2:42:33 PM
C:\Users\hweiss\Documents\EAST\Workspaces\12139333.wsp

UNITED STATES PATENT AND TRADEMARK OFFICE

UNITED STATES DEPARTMENT OF COMMERCE
United States Patent and Trademark Office
Address: COMMISSIONER FOR PATENTS
P.O. Box 1450
Alexandria, Virginia 22313-1450
www.uspto.gov

BIB DATA SHEET

CONFIRMATION NO. 1204

SERIAL NUMBER	FILING or 371(c) DATE	CLASS	GROUP ART UNIT	ATTORNEY DOCKET NO.
12/139,333	06/13/2008 **RULE**	381	2814	ALI-050A

APPLICANTS
Gregory C. Burnett, Dodge Center, MN;

**** CONTINUING DATA ***************************
This appln claims benefit of 60/934,551 06/13/2007
and claims benefit of 60/953,444 08/01/2007
and claims benefit of 60/954,712 08/08/2007
and claims benefit of 61/045,377 04/16/2008

**** FOREIGN APPLICATIONS ***************************

**** IF REQUIRED, FOREIGN FILING LICENSE GRANTED ****
06/25/2008

Foreign Priority claimed	❑ Yes ☑ No	❑ Met after Allowance	STATE OR COUNTRY	SHEETS DRAWINGS	TOTAL CLAIMS	INDEPENDENT CLAIMS
35 USC 119(a-d) conditions met	❑ Yes ❑ No		MN	17	48	6
Verified and Acknowledged	/HOWARD WEISS/ Examiner's Signature	Initials				

ADDRESS
Kokka & Backus, PC
703 High Street
Palo Alto, CA 94301
UNITED STATES

TITLE
Virtual Microphone Arrays Using Dual Omnidirectional Microphone Array (DOMA)

FILING FEE RECEIVED		
3190	FEES: Authority has been given in Paper No._____ to charge/credit DEPOSIT ACCOUNT No._____ for following:	❑ All Fees ❑ 1.16 Fees (Filing) ❑ 1.17 Fees (Processing Ext. of time) ❑ 1.18 Fees (Issue) ❑ Other _____ ❑ Credit

BIB (Rev. 05/07).

PART B - FEE(S) TRANSMITTAL

Complete and send this form, together with applicable fee(s), to: Mail **Mail Stop ISSUE FEE**
Commissioner for Patents
P.O. Box 1450
Alexandria, Virginia 22313-1450
or Fax (571)-273-2885

INSTRUCTIONS: This form should be used for transmitting the ISSUE FEE and PUBLICATION FEE (if required). Blocks 1 through 5 should be completed where appropriate. All further correspondence including the Patent, advance orders and notification of maintenance fees will be mailed to the current correspondence address as indicated unless corrected below or directed otherwise in Block 1, by (a) specifying a new correspondence address; and/or (b) indicating a separate "FEE ADDRESS" for maintenance fee notifications.

CURRENT CORRESPONDENCE ADDRESS (Note: Use Block 1 for any change of address)

15516 7590 04/04/2013
Kokka & Backus, PC
703 High Street
Palo Alto, CA 94301

Note: A certificate of mailing can only be used for domestic mailings of the Fee(s) Transmittal. This certificate cannot be used for any other accompanying papers. Each additional paper, such as an assignment or formal drawing, must have its own certificate of mailing or transmission.

Certificate of Mailing or Transmission
I hereby certify that this Fee(s) Transmittal is being deposited with the United States Postal Service with sufficient postage for first class mail in an envelope addressed to the Mail Stop ISSUE FEE address above, or being facsimile transmitted to the USPTO (571) 273-2885, on the date indicated below.

Kate M. Cleland	(Depositor's name)
K. Cleland	(Signature)
July 1, 2013	(Date)

APPLICATION NO.	FILING DATE	FIRST NAMED INVENTOR	ATTORNEY DOCKET NO.	CONFIRMATION NO.
12/139,333	06/13/2008	Gregory C. Burnett	ALI-050A	1204

TITLE OF INVENTION: VIRTUAL MICROPHONE ARRAYS USING DUAL OMNIDIRECTIONAL MICROPHONE ARRAY (DOMA)

APPLN. TYPE	ENTITY STATUS	ISSUE FEE DUE	PUBLICATION FEE DUE	PREV. PAID ISSUE FEE	TOTAL FEE(S) DUE	DATE DUE
nonprovisional	UNDISCOUNTED	$1780	$300	$0	$2080	07/05/2013

EXAMINER	ART UNIT	CLASS-SUBCLASS
WEISS, HOWARD	2814	381-092000

1. Change of correspondence address or indication of "Fee Address" (37 CFR 1.363).
- ☐ Change of correspondence address (or Change of Correspondence Address form PTO/SB/122) attached.
- ☐ "Fee Address" indication (or "Fee Address" Indication form PTO/SB/47; Rev 03-02 or more recent) attached. **Use of a Customer Number is required.**

2. For printing on the patent front page, list
(1) the names of up to 3 registered patent attorneys or agents OR, alternatively,
(2) the name of a single firm (having as a member a registered attorney or agent) and the names of up to 2 registered patent attorneys or agents. If no name is listed, no name will be printed.

1 KOKKA & BACKUS, PC
2
3

3. ASSIGNEE NAME AND RESIDENCE DATA TO BE PRINTED ON THE PATENT (print or type)

PLEASE NOTE: Unless an assignee is identified below, no assignee data will appear on the patent. If an assignee is identified below, the document has been filed for recordation as set forth in 37 CFR 3.11. Completion of this form is NOT a substitute for filing an assignment.

(A) NAME OF ASSIGNEE: AliphCom

(B) RESIDENCE: (CITY and STATE OR COUNTRY): San Francisco, CA

Please check the appropriate assignee category or categories (will not be printed on the patent) : ☐ Individual ☑ Corporation or other private group entity ☐ Government

4a. The following fee(s) are submitted:
- ☑ Issue Fee
- ☑ Publication Fee (No small entity discount permitted)
- ☐ Advance Order - # of Copies _____

4b. Payment of Fee(s): **(Please first reapply any previously paid issue fee shown above)**
- ☐ A check is enclosed.
- ☑ Payment by credit card via EFS-Web.
- ☐ The Director is hereby authorized to charge the required fee(s), any deficiency, or credit any overpayment, to Deposit Account Number _____ (enclose an extra copy of this form).

5. **Change in Entity Status** (from status indicated above)

☐ Applicant certifying micro entity status. See 37 CFR 1.29	NOTE: Absent a valid certification of Micro Entity Status (see form PTO/SB/15A and 15B), issue fee payment in the micro entity amount will not be accepted at the risk of application abandonment.
☑ Applicant asserting small entity status. See 37 CFR 1.27	NOTE: If the application was previously under micro entity status, checking this box will be taken to be a notification of loss of entitlement to micro entity status.
☐ Applicant changing to regular undiscounted fee status.	NOTE: Checking this box will be taken to be a notification of loss of entitlement to small or micro entity status, as applicable.

NOTE: The Issue Fee and Publication Fee (if required) will not be accepted from anyone other than the applicant; a registered attorney or agent; or the assignee or other party in interest as shown by the records of the United States Patent and Trademark Office.

Authorized Signature _____ Date July 1, 2013

Typed or printed name Scott S. Kokka Registration No. 51,893

This collection of information is required by 37 CFR 1.311. The information is required to obtain or retain a benefit by the public which is to file (and by the USPTO to process) an application. Confidentiality is governed by 35 U.S.C. 122 and 37 CFR 1.14. This collection is estimated to take 12 minutes to complete, including gathering, preparing, and submitting the completed application form to the USPTO. Time will vary depending upon the individual case. Any comments on the amount of time you require to complete this form and/or suggestions for reducing this burden, should be sent to the Chief Information Officer, U.S. Patent and Trademark Office, U.S. Department of Commerce, P.O. Box 1450, Alexandria, Virginia 22313-1450. DO NOT SEND FEES OR COMPLETED FORMS TO THIS ADDRESS. SEND TO: Commissioner for Patents, P.O. Box 1450, Alexandria, Virginia 22313-1450.

Under the Paperwork Reduction Act of 1995, no persons are required to respond to a collection of information unless it displays a valid OMB control number.

IN THE UNITED STATES PATENT AND TRADEMARK OFFICE

In re the Application of: Gregory C. Burnett	Examiner: WEISS, Howard
Application Serial No.: 12/139,333	Confirmation No.: 1204
Filing Date: June 13, 2008	Group Art Unit: 2814
For: FORMING VIRTUAL MICROPHONE ARRAYS USING DUAL OMNIDIRECTIONAL MICROPHONE ARRAY (DOMA)	Transmission Date: July 1, 2013 Atty. Docket No.: ALI-050A

Certificate of Transmission
I hereby certify that this correspondence is being transmitted via the U.S. Patent and Trademark Office (USPTO) electronic filing system (EFS-Web) to the USPTO on **July 1, 2013**.
Signed: _____
Kate M. Cleland

WRITTEN ASSERTION FOR NOTIFICATION OF ENTITLEMENT TO SMALL ENTITY STATUS UNDER 37 CFR § 1.27(c)(1)

Dear Sir or Madam:

In accordance with 37 CFR § 1.27(c)(1), Applicant is submitting this written assertion for notification of entitlement to small entity status in the above-referenced patent application. This written assertion is intended to notify the Office of Applicant's entitlement to small entity status.

Please contact the undersigned representative below if you have any questions or require any additional information.

Respectfully submitted,

Scott S. Kokka
Reg. No. 51,893

KOKKA & BACKUS, PC
703 High Street
Palo Alto, CA 94301
Tel.: (650) 566-9921
Fax: (650) 566-9922

Electronic Patent Application Fee Transmittal

Application Number:	12139333
Filing Date:	13-Jun-2008
Title of Invention:	VIRTUAL MICROPHONE ARRAYS USING DUAL OMNIDIRECTIONAL MICROPHONE ARRAY (DOMA)
First Named Inventor/Applicant Name:	Gregory C. Burnett
Filer:	Scott Susumu Kokka/Kate Cleland
Attorney Docket Number:	ALI-050A

Filed as Small Entity

Utility under 35 USC 111(a) Filing Fees

Description	Fee Code	Quantity	Amount	Sub-Total in USD($)
Basic Filing:				
Pages:				
Claims:				
Miscellaneous-Filing:				
Publ. Fee- Early, Voluntary, or Normal	1504	1	300	300
Petition:				
Patent-Appeals-and-Interference:				
Post-Allowance-and-Post-Issuance:				
Utility Appl Issue Fee	2501	1	890	890

Description	Fee Code	Quantity	Amount	Sub-Total in USD($)
Extension-of-Time:				
Miscellaneous:				
		Total in USD ($)		**1190**

Electronic Acknowledgement Receipt	
EFS ID:	16209981
Application Number:	12139333
International Application Number:	
Confirmation Number:	1204
Title of Invention:	VIRTUAL MICROPHONE ARRAYS USING DUAL OMNIDIRECTIONAL MICROPHONE ARRAY (DOMA)
First Named Inventor/Applicant Name:	Gregory C. Burnett
Customer Number:	15516
Filer:	Scott Susumu Kokka
Filer Authorized By:	
Attorney Docket Number:	ALI-050A
Receipt Date:	01-JUL-2013
Filing Date:	13-JUN-2008
Time Stamp:	20:28:30
Application Type:	Utility under 35 USC 111(a)

Payment information:

Submitted with Payment	yes
Payment Type	Credit Card
Payment was successfully received in RAM	$1190
RAM confirmation Number	7842
Deposit Account	
Authorized User	

File Listing:

Document Number	Document Description	File Name	File Size(Bytes)/ Message Digest	Multi Part /.zip	Pages (if appl.)

1		ALI-050A_Issue_and_Publication_Fees_asfiled.pdf	111685 db936c5d70c4b22e54c399f5704877800d7f78b9	yes	3
	Multipart Description/PDF files in .zip description				
	Document Description		**Start**	**End**	
	Issue Fee Payment (PTO-85B)		1	2	
	Assertion of entitlement to small entity status		3	3	
Warnings:					
Information:					
2	Fee Worksheet (SB06)	fee-info.pdf	32164 fdc3877a39c5499eb50be2d14c3ba967cd60f8db	no	2
Warnings:					
Information:					
		Total Files Size (in bytes):	143849		

This Acknowledgement Receipt evidences receipt on the noted date by the USPTO of the indicated documents, characterized by the applicant, and including page counts, where applicable. It serves as evidence of receipt similar to a Post Card, as described in MPEP 503.

<u>New Applications Under 35 U.S.C. 111</u>
If a new application is being filed and the application includes the necessary components for a filing date (see 37 CFR 1.53(b)-(d) and MPEP 506), a Filing Receipt (37 CFR 1.54) will be issued in due course and the date shown on this Acknowledgement Receipt will establish the filing date of the application.

<u>National Stage of an International Application under 35 U.S.C. 371</u>
If a timely submission to enter the national stage of an international application is compliant with the conditions of 35 U.S.C. 371 and other applicable requirements a Form PCT/DO/EO/903 indicating acceptance of the application as a national stage submission under 35 U.S.C. 371 will be issued in addition to the Filing Receipt, in due course.

<u>New International Application Filed with the USPTO as a Receiving Office</u>
If a new international application is being filed and the international application includes the necessary components for an international filing date (see PCT Article 11 and MPEP 1810), a Notification of the International Application Number and of the International Filing Date (Form PCT/RO/105) will be issued in due course, subject to prescriptions concerning national security, and the date shown on this Acknowledgement Receipt will establish the international filing date of the application.

UNITED STATES PATENT AND TRADEMARK OFFICE

UNITED STATES DEPARTMENT OF COMMERCE
United States Patent and Trademark Office
Address: COMMISSIONER FOR PATENTS
P.O. Box 1450
Alexandria, Virginia 22313-1450
www.uspto.gov

APPLICATION NO.	ISSUE DATE	PATENT NO.	ATTORNEY DOCKET NO.	CONFIRMATION NO.
12/139,333	08/06/2013	8503691	ALI-050A	1204

15516 7590 07/17/2013
Kokka & Backus, PC
703 High Street
Palo Alto, CA 94301

ISSUE NOTIFICATION

The projected patent number and issue date are specified above.

Determination of Patent Term Adjustment under 35 U.S.C. 154 (b)
(application filed on or after May 29, 2000)

The Patent Term Adjustment is 1050 day(s). Any patent to issue from the above-identified application will include an indication of the adjustment on the front page.

If a Continued Prosecution Application (CPA) was filed in the above-identified application, the filing date that determines Patent Term Adjustment is the filing date of the most recent CPA.

Applicant will be able to obtain more detailed information by accessing the Patent Application Information Retrieval (PAIR) WEB site (http://pair.uspto.gov).

Any questions regarding the Patent Term Extension or Adjustment determination should be directed to the Office of Patent Legal Administration at (571)-272-7702. Questions relating to issue and publication fee payments should be directed to the Application Assistance Unit (AAU) of the Office of Data Management (ODM) at (571)-272-4200.

APPLICANT(s) (Please see PAIR WEB site http://pair.uspto.gov for additional applicants):

Gregory C. Burnett, Dodge Center, MN;

The United States represents the largest, most dynamic marketplace in the world and is an unparalleled location for business investment, innovation, and commercialization of new technologies. The USA offers tremendous resources and advantages for those who invest and manufacture goods here. Through SelectUSA, our nation works to encourage and facilitate business investment. To learn more about why the USA is the best country in the world to develop technology, manufacture products, and grow your business, visit SelectUSA.gov.

IR103 (Rev. 10/09)

Large Entity Declaration

Schedule A – Patents assigned to *Assignee*

APPLICATION NUMBER	FILING DATE	PATENT NUMBER	ISSUE DATE
09/986,989	01 June 2004	6743587 ×	N/A
11/474,833	25 March 2008	7349586 ×	N/A
12/009,603	11 October 2011	8036498	N/A
12/163,592	27 June 2008	8254617	
12/163,617	27 June 2008	8280072	
12/606,146	26 October 2009	8321213	
12/606,140	26 October 2009	8326611	
11/199,856	08 August 2005	8340309	
12/058,758	19 February 2008	8382590	
10/940,214	13 September 2004	8398546	
11/481,147	05 July 2006	8403845	
13/454,040	23 April 2012	8446275	
12/772,963	03 May 2010	8452023	
12/354,689	15 January 2009	8452347	
10/400,282	24 March 2003	8467543	
12/163,675	27 June 2008	8477961	
12/972,995	03 May 2010	8488803	
12/006,607	03 January 2008	8489136	
12/139,355	13 June 2008	8494177	
12/244,670	02 October 2008	8503596	
12/972,947	03 May 2010	8503686	
* 12/139,373	13 June 2008	8503691	
12/139,361	13 June 2008	8503692	
13/246,617	27 September 2011	8509690	
13/429,839	22 March 2012	8529811	
11/925,965	28 October 2007	8708904	
10/430,182	5 May 2003	7068860 ×	
12/083,760	19 February 2008	8275635	

CPA GLOBAL

Liberation House
Castle Street, St Helier
Jersey JE1 1BL
Channel Islands

Tel +44 (0) 1534 888 711
Fax +44 (0) 1534 888 747
enquiries@cpaglobal.com

www.cpaglobal.com

FAX TO:

Pages 10

Commissioner of Patents and Trademarks
Attn. Maintenance Fee Branch
Office of Finance – Maintenance Fee Division
2051 Jamieson Ave – Suite 300
Alexandria, VA 22314

Fax no.: 001 571 273-6500

22 January 2015

URGENT

Dear Sirs,

Please see the attached entity status form to be amended to **LARGE** Entity status.

Please can you amend you records accordingly.

Many thanks for your assistance.

Kind regards,

Matthew Allman

Supplier Compliance

E:mallman@cpaglobal.com
T: 011 44 1534 811303
F: 011 44 1534 811347

Certificate of Facsimile Transmission

I hereby certify that this document is being facsimile transmitted to the USPTO at 001 571-273-6500 on the date shown below.

Date 22-Jan-15 Signed

Large Entity Declaration

PATENT
IN THE UNITED STATES PATENT AND TRADEMARK OFFICE

ASSERTION OF LARGE ENTITY STATUS
PURSUANT TO 37 C.F.R. §1.27 (g)(2)

Commissioner for Patents
Mail Stop M Correspondence
P.O. Box 1450
Alexandria, VA 22313-1450

Sir:

This communication hereby asserts that the patents identified in the attached Schedule A are entitled to large entity status.

Respectfully submitted,

COMPANY or FIRM NAME AND ADDRESS:

AliphCom dba Jawbone
BodyMedia, Inc.
99 Rhode Island Street
3rd Floor
San Francisco, CA 94103

Signature

Michael Luna
Printed Name

CTO
Title

OR

Reg. # if US Attorney_____

PATENT ASSIGNMENT COVER SHEET

Electronic Version v1.1
Stylesheet Version v1.2

EPAS ID: PAT3502102

SUBMISSION TYPE:	NEW ASSIGNMENT
NATURE OF CONVEYANCE:	SECURITY INTEREST

CONVEYING PARTY DATA

Name	Execution Date
ALIPHCOM	08/26/2015
MACGYVER ACQUISITION LLC	08/26/2015
ALIPH, INC.	08/26/2015
BODYMEDIA, INC.	08/26/2015
PROJECT PARIS ACQUISITION LLC	08/26/2015

RECEIVING PARTY DATA

Name:	BLACKROCK ADVISORS, LLC
Street Address:	1 UNIVERSITY SQUARE DRIVE
Internal Address:	C/O GLOBAL ALLOCATION GROUP
City:	PRINCETON
State/Country:	NEW JERSEY
Postal Code:	08540

PROPERTY NUMBERS Total: 604

Property Type	Number
Application Number:	10159770
Application Number:	13069244
Application Number:	13069264
Application Number:	13069275
Application Number:	13753441
Application Number:	29333427
Application Number:	29333428
Application Number:	29333430
Application Number:	29333431
Application Number:	29333432
Application Number:	10400292
Application Number:	10667207
Application Number:	10769302
Application Number:	11199856
Application Number:	11704552

Property Type	Number
Application Number:	11859460
Application Number:	11860004
Application Number:	11969737
Application Number:	11982956
Application Number:	12006607
Application Number:	12039718
Application Number:	12123364
Application Number:	12139333
Application Number:	12139344
Application Number:	12139355
Application Number:	12139361
Application Number:	12163592
Application Number:	12163617
Application Number:	12163647
Application Number:	12163675
Application Number:	12243718
Application Number:	12244670
Application Number:	12354689
Application Number:	12606140
Application Number:	12606146
Application Number:	12756051
Application Number:	12772947
Application Number:	12772963
Application Number:	12772975
Application Number:	12826643
Application Number:	12826658
Application Number:	12882482
Application Number:	12886919
Application Number:	13037057
Application Number:	13109839
Application Number:	13117539
Application Number:	13135728
Application Number:	13158372
Application Number:	13158416
Application Number:	13180000
Application Number:	13180320
Application Number:	13181486
Application Number:	13181500

Property Type	Number
Application Number:	13181511
Application Number:	13181512
Application Number:	13181513
Application Number:	13184422
Application Number:	13209047
Application Number:	13246617
Application Number:	13247975
Application Number:	13270976
Application Number:	13346719
Application Number:	13361919
Application Number:	13374746
Application Number:	13405240
Application Number:	13405241
Application Number:	13420568
Application Number:	13421576
Application Number:	13427839
Application Number:	13431725
Application Number:	13433204
Application Number:	13433208
Application Number:	13433213
Application Number:	13436765
Application Number:	13454040
Application Number:	13491345
Application Number:	13491524
Application Number:	13492770
Application Number:	13492776
Application Number:	13492857
Application Number:	13528830
Application Number:	13552462
Application Number:	13561033
Application Number:	13627997
Application Number:	13666932
Application Number:	13669356
Application Number:	13669369
Application Number:	13669375
Application Number:	13670419
Application Number:	13672392
Application Number:	13672398

Property Type	Number
Application Number:	13672451
Application Number:	13672671
Application Number:	13673846
Application Number:	13673857
Application Number:	13674080
Application Number:	13802266
Application Number:	13802283
Application Number:	13802305
Application Number:	13802319
Application Number:	13802409
Application Number:	13802425
Application Number:	13802442
Application Number:	13802528
Application Number:	13802646
Application Number:	13802674
Application Number:	13802689
Application Number:	13827683
Application Number:	13827754
Application Number:	13830770
Application Number:	13830860
Application Number:	13830927
Application Number:	13831139
Application Number:	13831260
Application Number:	13831301
Application Number:	13831447
Application Number:	13831485
Application Number:	13831689
Application Number:	13831698
Application Number:	13870843
Application Number:	13886173
Application Number:	13886254
Application Number:	13890143
Application Number:	13894850
Application Number:	13898451
Application Number:	13898465
Application Number:	13898472
Application Number:	13898474
Application Number:	13900943

Property Type	Number
Application Number:	13906109
Application Number:	13906244
Application Number:	13917225
Application Number:	13919307
Application Number:	13919339
Application Number:	13919919
Application Number:	13929718
Application Number:	13942503
Application Number:	13942623
Application Number:	13942674
Application Number:	13948160
Application Number:	13952532
Application Number:	13952552
Application Number:	13954331
Application Number:	13954367
Application Number:	13957383
Application Number:	13959707
Application Number:	13959708
Application Number:	13959709
Application Number:	13967317
Application Number:	14029300
Application Number:	14058125
Application Number:	14064189
Application Number:	14065393
Application Number:	14065400
Application Number:	14065415
Application Number:	14065419
Application Number:	14067444
Application Number:	14068551
Application Number:	14069008
Application Number:	14069031
Application Number:	14070437
Application Number:	14070443
Application Number:	14070446
Application Number:	14070452
Application Number:	14071531
Application Number:	14071546
Application Number:	14073550

Property Type	Number
Application Number:	14073696
Application Number:	14075523
Application Number:	14076014
Application Number:	14079632
Application Number:	14105119
Application Number:	14105127
Application Number:	14105146
Application Number:	14105157
Application Number:	14105159
Application Number:	14105172
Application Number:	14105173
Application Number:	14144494
Application Number:	14144499
Application Number:	14144505
Application Number:	14144512
Application Number:	14144513
Application Number:	14144514
Application Number:	14144516
Application Number:	14144517
Application Number:	14144518
Application Number:	14144519
Application Number:	14144521
Application Number:	14144524
Application Number:	14145849
Application Number:	14145852
Application Number:	14145856
Application Number:	14145879
Application Number:	14145887
Application Number:	14145894
Application Number:	14149805
Application Number:	14181589
Application Number:	14181595
Application Number:	14183425
Application Number:	14183463
Application Number:	14183472
Application Number:	14183490
Application Number:	14183491
Application Number:	14183493

Property Type	Number
Application Number:	14187317
Application Number:	14188602
Application Number:	14191284
Application Number:	14192432
Application Number:	14192463
Application Number:	14192610
Application Number:	14192620
Application Number:	14194424
Application Number:	14194495
Application Number:	14203464
Application Number:	14203467
Application Number:	14205138
Application Number:	14205151
Application Number:	14205215
Application Number:	14205263
Application Number:	14207183
Application Number:	14207203
Application Number:	14207221
Application Number:	14207235
Application Number:	14207243
Application Number:	14207263
Application Number:	14207420
Application Number:	14207429
Application Number:	14209329
Application Number:	14209690
Application Number:	14209959
Application Number:	14210201
Application Number:	14210234
Application Number:	14212832
Application Number:	14213439
Application Number:	14214065
Application Number:	14214086
Application Number:	14214254
Application Number:	14215038
Application Number:	14215047
Application Number:	14215051
Application Number:	14219648
Application Number:	14224868

Property Type	Number
Application Number:	14225339
Application Number:	14243747
Application Number:	14244677
Application Number:	14244759
Application Number:	14246971
Application Number:	14260221
Application Number:	14266697
Application Number:	14270242
Application Number:	14270249
Application Number:	14272464
Application Number:	14279253
Application Number:	14281856
Application Number:	14289617
Application Number:	14301220
Application Number:	14301227
Application Number:	14313895
Application Number:	14328665
Application Number:	14389766
Application Number:	14421815
Application Number:	14445051
Application Number:	14452496
Application Number:	14457051
Application Number:	14463556
Application Number:	14468327
Application Number:	29299133
Application Number:	29299134
Application Number:	29299135
Application Number:	29299139
Application Number:	29353843
Application Number:	29353844
Application Number:	29353846
Application Number:	29353847
Application Number:	29354212
Application Number:	29377627
Application Number:	29377628
Application Number:	29378325
Application Number:	29378327
Application Number:	29378328

Property Type	Number
Application Number:	29378329
Application Number:	29383495
Application Number:	29383712
Application Number:	29383714
Application Number:	29393916
Application Number:	29405617
Application Number:	29405623
Application Number:	29405625
Application Number:	29405626
Application Number:	29405627
Application Number:	29405628
Application Number:	29405630
Application Number:	29405631
Application Number:	29405633
Application Number:	29405634
Application Number:	29405635
Application Number:	29405636
Application Number:	29405637
Application Number:	29405638
Application Number:	29405639
Application Number:	29405640
Application Number:	29405641
Application Number:	29405642
Application Number:	29405643
Application Number:	29405644
Application Number:	29405645
Application Number:	29405646
Application Number:	29413571
Application Number:	29413572
Application Number:	29413573
Application Number:	29445283
Application Number:	29445286
Application Number:	29445287
Application Number:	29459899
Application Number:	29459900
Application Number:	62019327
Application Number:	62067428
Application Number:	62107411

Property Type	Number
Application Number:	14121355
Application Number:	14121463
Application Number:	14121465
Application Number:	14121938
Application Number:	14121939
Application Number:	14121940
Application Number:	14121941
Application Number:	14121942
Application Number:	14121943
Application Number:	14121944
Application Number:	14121947
Application Number:	14121948
Application Number:	14313901
Application Number:	14480048
Application Number:	14480070
Application Number:	14480427
Application Number:	14480446
Application Number:	14480452
Application Number:	14480462
Application Number:	14480628
Application Number:	14486978
Application Number:	14486997
Application Number:	14488042
Application Number:	14493298
Application Number:	14519116
Application Number:	14526503
Application Number:	14532789
Application Number:	14541064
Application Number:	14541134
Application Number:	14541135
Application Number:	14578297
Application Number:	14596127
Application Number:	14606995
Application Number:	14637387
Application Number:	14640013
Application Number:	14656683
Application Number:	14659521
Application Number:	09419600

Property Type	Number
Application Number:	09595660
Application Number:	09602537
Application Number:	09620579
Application Number:	09822890
Application Number:	09923181
Application Number:	10227575
Application Number:	10313255
Application Number:	10612894
Application Number:	10682293
Application Number:	10682759
Application Number:	10940214
Application Number:	10940889
Application Number:	11088002
Application Number:	11239748
Application Number:	11247049
Application Number:	11434949
Application Number:	11481147
Application Number:	11582896
Application Number:	11724373
Application Number:	11876623
Application Number:	11925906
Application Number:	11925965
Application Number:	11928039
Application Number:	11930036
Application Number:	11930053
Application Number:	11930081
Application Number:	11930091
Application Number:	11930092
Application Number:	11930094
Application Number:	12033722
Application Number:	12033731
Application Number:	12033741
Application Number:	12033746
Application Number:	12033751
Application Number:	12033753
Application Number:	12033760
Application Number:	12033766
Application Number:	12352911

Property Type	Number
Application Number:	12840109
Application Number:	13130282
Application Number:	13291879
Application Number:	13291982
Application Number:	13734433
Application Number:	13761409
Application Number:	13761557
Application Number:	14058485
Application Number:	14058493
Application Number:	14058501
Application Number:	14058563
Application Number:	14059054
Application Number:	14059072
Application Number:	14059117
Application Number:	14060004
Application Number:	14060010
Application Number:	14060029
Application Number:	14060047
Application Number:	14060072
Application Number:	14060082
Application Number:	14060092
Application Number:	14060122
Application Number:	14081369
Application Number:	14081406
Application Number:	14081880
Application Number:	14081889
Application Number:	14081901
Application Number:	14081928
Application Number:	14081935
Application Number:	14081942
Application Number:	14081951
Application Number:	14081956
Application Number:	14081967
Application Number:	14081972
Application Number:	14081979
Application Number:	14082070
Application Number:	14082176
Application Number:	14082178

Property Type	Number
Application Number:	14082179
Application Number:	14082180
Application Number:	14082183
Application Number:	14082185
Application Number:	14082186
Application Number:	14082188
Application Number:	14082189
Application Number:	14082190
Application Number:	14082192
Application Number:	14083372
Application Number:	14083382
Application Number:	14083389
Application Number:	14083397
Application Number:	14083401
Application Number:	14083404
Application Number:	14083407
Application Number:	14133607
Application Number:	14133610
Application Number:	14133612
Application Number:	14133615
Application Number:	14133619
Application Number:	14133620
Application Number:	14133622
Application Number:	14133625
Application Number:	14133626
Application Number:	14133634
Application Number:	14133638
Application Number:	14133640
Application Number:	14133641
Application Number:	14136750
Application Number:	14137027
Application Number:	14137087
Application Number:	14137126
Application Number:	14137233
Application Number:	14138030
Application Number:	14138033
Application Number:	14138024
Application Number:	14138043

Property Type	Number
Application Number:	14138046
Application Number:	14139871
Application Number:	14139872
Application Number:	14139873
Application Number:	14139875
Application Number:	14221506
Application Number:	14248576
Application Number:	14248776
Application Number:	14248830
Application Number:	14248853
Application Number:	14248885
Application Number:	14249135
Application Number:	14249211
Application Number:	14249235
Application Number:	14249262
Application Number:	14249290
Application Number:	14249314
Application Number:	14249318
Application Number:	14249328
Application Number:	14252090
Application Number:	14284947
Application Number:	14285018
Application Number:	14285036
Application Number:	14285092
Application Number:	14285159
Application Number:	14285194
Application Number:	14285232
Application Number:	14292105
Application Number:	14292368
Application Number:	14292735
Application Number:	14292831
Application Number:	14292833
Application Number:	14336413
Application Number:	14336448
Application Number:	14336539
Application Number:	14336571
Application Number:	14336598
Application Number:	14336625

Property Type	Number
Application Number:	29127587
Application Number:	29129931
Application Number:	29143975
Application Number:	29256362
Application Number:	29256753
Application Number:	29383860
Application Number:	29434003
Application Number:	14509034
Application Number:	14526499
Application Number:	14630618
Application Number:	14636157
Application Number:	14636158
Application Number:	95002354
Application Number:	95002360
Application Number:	95002366
Application Number:	95002367
Application Number:	95002371
Application Number:	95002376
Application Number:	95002382
Application Number:	14039258
Application Number:	09622910
Application Number:	09986989
Application Number:	29445284
Application Number:	29466527
Application Number:	29466531
Application Number:	29466534
Application Number:	29466536
Application Number:	29466539
Application Number:	29470963
Application Number:	29470964
Application Number:	29470965
Application Number:	29470966
Application Number:	29470967
Application Number:	29470968
Application Number:	29477005
Application Number:	29477006
Application Number:	29478533
Application Number:	29479052

Property Type	Number
Application Number:	29479055
Application Number:	29479058
Application Number:	29479060
Application Number:	29479064
Application Number:	29479066
Application Number:	29479069
Application Number:	29479071
Application Number:	29479074
Application Number:	29479077
Application Number:	29479078
Application Number:	29479079
Application Number:	29482849
Application Number:	29482850
Application Number:	29482851
Application Number:	29482852
Application Number:	29482854
Application Number:	29482855
Application Number:	29482856
Application Number:	29485103
Application Number:	29485118
Application Number:	29495368
Application Number:	29495369
Application Number:	29495373
Application Number:	29495376
Application Number:	29495380
Application Number:	29495384
Application Number:	29495387
Application Number:	29495389
Application Number:	29495390
Application Number:	29495394
Application Number:	29495395
Application Number:	29495397
Application Number:	29495399
Application Number:	29495400
Application Number:	29495404
Application Number:	29495405
Application Number:	29495406
Application Number:	29495407

Property Type	Number
Application Number:	29495669
Application Number:	29495670
Application Number:	29495674
Application Number:	29508180
Application Number:	29508184
Application Number:	29508185
Application Number:	29508187
Application Number:	29508193
Application Number:	29508196
Application Number:	29508200
Application Number:	29508205
Application Number:	29508207
Application Number:	29516012
Application Number:	29516014
Application Number:	29516015
Application Number:	29516016
Application Number:	29516017
Application Number:	29517054
Application Number:	29517056

CORRESPONDENCE DATA

Fax Number: (617)235-9802

Correspondence will be sent to the e-mail address first; if that is unsuccessful, it will be sent using a fax number, if provided; if that is unsuccessful, it will be sent via US Mail.

Phone: 6179517860

Email: ronald.duvernay@ropesgray.com

Correspondent Name: JOSHUA S. JACKSON

Address Line 1: PRUDENTIAL TOWER, 800 BOYLSTON STREET

Address Line 2: ROPES & GRAY LLP

Address Line 4: BOSTON, MASSACHUSETTS 02199-3600

ATTORNEY DOCKET NUMBER:	MFOG-652
NAME OF SUBMITTER:	JOSHUA S. JACKSON
SIGNATURE:	/j jackson/
DATE SIGNED:	08/27/2015
	This document serves as an Oath/Declaration (37 CFR 1.63).

Total Attachments: 32

source=MFOG Amended PAT Sec Int#page1.tif

source=MFOG Amended PAT Sec Int#page2.tif

source=MFOG Amended PAT Sec Int#page3.tif

source=MFOG Amended PAT Sec Int#page4.tif

source=MFOG Amended PAT Sec Int#page5.tif
source=MFOG Amended PAT Sec Int#page6.tif
source=MFOG Amended PAT Sec Int#page7.tif
source=MFOG Amended PAT Sec Int#page8.tif
source=MFOG Amended PAT Sec Int#page9.tif
source=MFOG Amended PAT Sec Int#page10.tif
source=MFOG Amended PAT Sec Int#page11.tif
source=MFOG Amended PAT Sec Int#page12.tif
source=MFOG Amended PAT Sec Int#page13.tif
source=MFOG Amended PAT Sec Int#page14.tif
source=MFOG Amended PAT Sec Int#page15.tif
source=MFOG Amended PAT Sec Int#page16.tif
source=MFOG Amended PAT Sec Int#page17.tif
source=MFOG Amended PAT Sec Int#page18.tif
source=MFOG Amended PAT Sec Int#page19.tif
source=MFOG Amended PAT Sec Int#page20.tif
source=MFOG Amended PAT Sec Int#page21.tif
source=MFOG Amended PAT Sec Int#page22.tif
source=MFOG Amended PAT Sec Int#page23.tif
source=MFOG Amended PAT Sec Int#page24.tif
source=MFOG Amended PAT Sec Int#page25.tif
source=MFOG Amended PAT Sec Int#page26.tif
source=MFOG Amended PAT Sec Int#page27.tif
source=MFOG Amended PAT Sec Int#page28.tif
source=MFOG Amended PAT Sec Int#page29.tif
source=MFOG Amended PAT Sec Int#page30.tif
source=MFOG Amended PAT Sec Int#page31.tif
source=MFOG Amended PAT Sec Int#page32.tif

AMENDED AND RESTATED PATENT SECURITY AGREEMENT

THIS AMENDED AND RESTATED PATENT SECURITY AGREEMENT (as it may be amended, restated or otherwise modified from time to time, the "Patent Security Agreement") is entered into as of August 26, 2015 by and among (i) AliphCom, a California corporation (the "Company"), MacGyver Acquisition LLC, a Delaware limited liability company, Aliph, Inc., a Delaware Corporation, BodyMedia, Inc., a Delaware corporation, and Project Paris Acquisition LLC, a Delaware limited liability company (each, a "Grantor", and collectively, the "Grantors"), and (ii) BlackRock Advisors, LLC, a Delaware limited liability company (the "Agent").

W I T N E S S E T H:

WHEREAS, each of the Grantors, the Purchasers identified therein and the Agent are entering into the Note Purchase Agreement, dated as of April 28, 2015, as amended by the First Amendment to Note Purchase Agreement; Omnibus Amendment to Secured Convertible Promissory Notes and Limited Consent, dated as of July 22, 2015 (as amended, restated, supplemented, or otherwise modified from time to time, the "Existing Note Purchase Agreement"), pursuant to which the Company issued certain secured convertible promissory notes (the "Notes") and the other Grantors agreed to Guarantee the Obligations;

WHEREAS, each of the Grantors and the Agent entered into the original Security Agreement, dated as of April 28, 2015 (as amended, restated, supplemented, or otherwise modified from time to time, the "Original Security Agreement"), in order to induce the Purchasers to purchase the Notes and to secure the Secured Obligations; and

WHEREAS, pursuant to the Original Security Agreement, each of the Grantors is required to execute and deliver to Agent the original Patent Security Agreement, dated as of April 28, 2015 (the "Original Patent Security Agreement");

WHEREAS, each of the Grantors, the Purchasers identified therein and the Agent entered into the Note Purchase Agreement, dated as of July 21, 2015 (as amended, restated, supplemented, or otherwise modified from time to time, the "July 2015 Note Purchase Agreement"), pursuant to which the Company issued certain additional Notes and the other Grantors agreed to Guarantee the Secured Obligations;

WHEREAS, each of the Grantors and the Agent entered into the Amended and Restated Security Agreement, dated as of July 22, 2015 (as amended, restated, supplemented, or otherwise modified from time to time, the "Security Agreement"), in order to induce the Purchasers to purchase the additional Notes and to secure the Secured Obligations; and

WHEREAS, the parties to the Original Patent Security Agreement wish to amend and restate the Original Patent Security Agreement in its entirety;

NOW, THEREFORE, in consideration of the premises and mutual covenants herein contained and for other good and valuable consideration, the receipt and sufficiency of which are hereby acknowledged, each Grantor hereby agrees as follows:

1. DEFINED TERMS. All initially capitalized terms used but not otherwise defined herein have the meanings given to them in the Security Agreement, and this Patent Security Agreement shall be subject to the rules of construction set forth in the Security Agreement, which rules of construction are incorporated herein by this reference, *mutatis mutandis*.

2. GRANT OF SECURITY INTEREST IN PATENT COLLATERAL. Each Grantor does hereby unconditionally grant, assign, and pledge to Agent, and agrees to unconditionally grant, assign, and pledge to Agent, for its benefit and the benefit of each of the Noteholders, to secure the Secured Obligations, as applicable, a continuing security interest (referred to in this Patent Security Agreement as the "Security Interest") in all of such Grantor's entire right, title and interest in and to the following, whether now owned or hereafter acquired or arising (collectively, the "Patent Collateral"):

(a) all of such Grantor's Patents and Patent Intellectual Property Licenses to which it is a party including those referred to on Schedule I;

(b) all applications, improvements, divisionals, continuations, continuations-in-part, reissues, reexaminations, or extensions of the foregoing, foreign counterparts, and the inventions covered thereby;

(c) all files and records relating to the prosecution, exploitation, and defense of any of the foregoing, and all rights of action pertaining to the Grantor's Patents; and

(d) all products and proceeds of the foregoing, including any claim by such Grantor against third parties for past, present or future infringement of any Patent or any Patent exclusively licensed under any Intellectual Property License, including the right to receive damages, or right to receive license fees, royalties, and other compensation under any Patent Intellectual Property License.

3. SECURITY FOR SECURED OBLIGATIONS. This Patent Security Agreement and the Security Interest created hereby secures the payment and performance of the Secured Obligations, whether now existing or arising hereafter. Without limiting the generality of the foregoing, this Patent Security Agreement secures the payment of all amounts which constitute part of the Secured Obligations and would be owed by Grantors, or any of them, to Agent, or the Noteholders, whether or not they are unenforceable or not allowable due to the existence of an Insolvency Proceeding involving any Grantor.

4. SECURITY AGREEMENT. The Security Interest granted pursuant to this Patent Security Agreement is granted in conjunction with the security interests granted to Agent, for its benefit and the benefit of the Noteholders, pursuant to the Security Agreement. Each Grantor hereby acknowledges and affirms that the rights and remedies of Agent with respect to the Security Interest in the Patent Collateral made and granted hereby are more fully set forth in the Security Agreement, the terms and provisions of which are incorporated by reference herein as if fully set forth herein. To the extent there is any inconsistency between this Patent Security Agreement and the Security Agreement, the Security Agreement shall control.

5. AUTHORIZATION TO SUPPLEMENT. If any Grantor shall obtain rights to any new patent application or issued patent or become entitled to the benefit of any patent application or patent for any improvement, divisional, continuation, continuation-in-part, reissue, or reexamination of any existing patent or patent application, or any inventions covered thereby, the provisions of this Patent Security Agreement shall automatically apply thereto. Grantors hereby authorize Agent unilaterally to modify this Patent Security Agreement by amending Schedule I to include any such new patent rights of each Grantor. Notwithstanding the foregoing, no failure to so modify this Patent Security Agreement or amend Schedule I shall in any way affect, invalidate or detract from Agent's continuing security interest in all Collateral, whether or not listed on Schedule I.

6. COUNTERPARTS. This Patent Security Agreement is a Note Document. This Patent Security Agreement may be executed in any number of counterparts and by different parties on separate counterparts, each of which, when executed and delivered, shall be deemed to be an original, and all of which, when taken together, shall constitute but one and the same Patent Security Agreement. Delivery

of an executed counterpart of this Patent Security Agreement by telefacsimile or other electronic method of transmission shall be equally as effective as delivery of an original executed counterpart of this Patent Security Agreement. Any party delivering an executed counterpart of this Patent Security Agreement by telefacsimile or other electronic method of transmission also shall deliver an original executed counterpart of this Patent Security Agreement but the failure to deliver an original executed counterpart shall not affect the validity, enforceability, and binding effect of this Patent Security Agreement.

7. CHOICE OF LAW AND VENUE, JURY TRIAL WAIVER. THIS PATENT SECURITY AGREEMENT SHALL BE SUBJECT TO THE PROVISIONS REGARDING CHOICE OF LAW AND VENUE AND JURY TRIAL WAIVER SET FORTH IN SECTIONS 8.16, 8.17 AND 8.18 OF THE SECURITY AGREEMENT, AND SUCH PROVISIONS ARE INCORPORATED HEREIN BY THIS REFERENCE, *MUTATIS MUTANDIS*.

8. ORIGINAL PATENT SECURITY AGREEMENT AMENDED AND RESTATED. This Patent Security Agreement is an amendment and restatement of the Original Patent Security Agreement. This Patent Security Agreement is in no way intended to constitute a novation of the Original Patent Security Agreement or the "Obligations" (as defined in the Existing Note Purchase Agreement and the July 2015 Note Purchase Agreement). Any security granted pursuant to or in connection with the Original Patent Security Agreement and the other documents executed in connection therewith shall continue to secure the Secured Obligations.

[signature page follows]

IN WITNESS WHEREOF, the parties hereto have caused this Patent Security Agreement to be executed and delivered as of the day and year first above written.

GRANTORS:

ALIPHCOM,
a California corporation

DocuSigned by:
Hosain Rahman
0E4D8FA187D24C0...
By: _____
Name: Hosain Rahman
Title: Chief Executive Officer

ALIPH, INC.,
a Delaware corporation

DocuSigned by:
Hosain Rahman
0E4D8FA187D24C0...
By: _____
Name: Hosain Rahman
Title: Chief Executive Officer

MACGYVER ACQUISITION, LLC,
a Delaware limited liability company
by ALIPHCOM, as sole member

DocuSigned by:
Hosain Rahman
0E4D8FA187D24C0...
By: _____
Name: Hosain Rahman
Title: Chief Executive Officer

BODYMEDIA, INC.,
a Delaware corporation

DocuSigned by:
Hosain Rahman
0E4D8FA187D24C0...
By: _____
Name: Hosain Rahman
Title: Chief Executive Officer

PROJECT PARIS ACQUISITION LLC, a
Delaware limited liability company
by ALIPHCOM, as sole member

DocuSigned by:
Hosain Rahman
0E4D8FA187D24C0...
By: _____
Name: Hosain Rahman
Title: Chief Executive Officer

[SIGNATURE PAGE TO AMENDED AND RESTATED PATENT SECURITY AGREEMENT]

AGENT:

ACCEPTED AND ACKNOWLEDGED BY:

BLACKROCK ADVISORS, LLC

By: Lisa O'Donnell
Name: Lisa O'Donnell
Title: Managing Director, Authorized Signatory

[SIGNATURE PAGE TO AMENDED AND RESTATED PATENT SECURITY AGREEMENT]

SCHEDULE I
to
PATENT SECURITY AGREEMENT

Patents

Current Owner	Country	Patent No.	Application No.	Filed
Aliph, Inc.	U.S.	7246058B2	10159770	5/30/2002
Aliph, Inc.	U.S.		13069244	3/22/2011
Aliph, Inc.	U.S.		13069264	3/22/2011
Aliph, Inc.	U.S.		13069275	3/22/2011
Aliph, Inc.	U.S.	8,942,383	13753441	1/29/2013
Aliph, Inc.	U.S.	D0609901S	29333427	3/9/2009
Aliph, Inc.	U.S.	D0610579S	29333428	3/9/2009
Aliph, Inc.	U.S.	D0614179S	29333430	3/9/2009
Aliph, Inc.	U.S.	D0609900S	29333431	3/9/2009
Aliph, Inc.	U.S.	D0620247S	29333432	3/9/2009
Aliphcom, Inc.	U.S.	8467543B2	10400282	3/27/2003
Aliphcom, Inc.	U.S.	8019091B2	10667207	9/18/2003
Aliphcom, Inc.	U.S.	7433484B2	10769302	1/30/2004
Aliphcom, Inc.	U.S.	8340309B2	11199856	8/8/2005

Aliphcom	U.S.	8810732B1	11704552	2/9/2007
Aliphcom	U.S.	8839342B2	11859460	9/21/2007
Aliphcom	U.S.	8320824B2	11860004	9/24/2007
Aliphcom	U.S.	7929446	11969737	1/4/2008
Aliphcom	U.S.		11982956	11/5/2007
Aliphcom	U.S.	8489136B2	12006607	1/3/2008
AliphCom, Inc.	U.S.	8055307	12039718	2/18/2008
Aliphcom, Inc.	U.S.	8625816B2	12123364	5/19/2008
Aliphcom, Inc.	U.S.	8503691B2	12139333	6/13/2008
Aliphcom, Inc.	U.S.	8837746B2	12139344	6/13/2008
Aliphcom, Inc.	U.S.	8494177B2	12139355	6/13/2008
Aliphcom, Inc.	U.S.	8503692B2	12139361	6/13/2008

Aliphcom, Inc.	U.S.	8254617B2	12163592	6/27/2008
Aliphcom, Inc.	U.S.	8280072B2	12163617	6/27/2008
Aliphcom, Inc.	U.S.		12163647	6/27/2008
Aliphcom, Inc.	U.S.	8477961B2	12163675	6/27/2008
Aliphcom, Inc.	U.S.	8130984B2	12243718	10/1/2008
Aliphcom, Inc.	U.S.	8503596B2	12244670	10/2/2008
Aliphcom, Inc.	U.S.	8452347B2	12354689	1/15/2009
Aliphcom, Inc.	U.S.	8326611B2	12606140	10/26/2009
Aliphcom, Inc.	U.S.	8321213B2	12606146	10/26/2009
Aliphcom, Inc.	U.S.		12756051	4/7/2010
Aliphcom, Inc.	U.S.	8503686B2	12772947	5/3/2010
Aliphcom, Inc.	U.S.	8452023B2	12772963	5/3/2010
Aliphcom, Inc.	U.S.	8488803B2	12772975	5/3/2010

Aliphcom, Inc.	U.S.	8699721B2	12826643	6/29/2010
Aliphcom, Inc.	U.S.	8731211B2	12826658	6/29/2010
Aliphcom, Inc.	U.S.	8842848B2	12882482	9/15/2010
Aliphcom, Inc.	U.S.	9003429	12886919	9/21/2010
Aliphcom, Inc.	U.S.		13037057	2/28/2011
AliphCom	U.S.		13109839	5/17/2011
Aliphcom, Inc.	U.S.	8817642B2	13117539	5/27/2011
Aliphcom, Inc.	U.S.		13135728	7/12/2011
Aliphcom, Inc.	U.S.		13158372	6/10/2011
Aliphcom, Inc.	U.S.		13158416	6/11/2011
Aliphcom	U.S.		13180000	7/11/2011
Aliphcom	U.S.	8793522B2	13180320	7/11/2011
Aliphcom	U.S.		13181486	7/12/2011

Aliphcom	U.S.		13181500	7/12/2011
Aliphcom	U.S.		13181511	7/12/2011
Aliphcom	U.S.		13181512	7/12/2011
Aliphcom	U.S.		13181513	7/12/2011
Aliphcom	U.S.	8838184B2	13184422	7/15/2011
Aliphcom	U.S.		13209047	8/12/2011
AliphCom, Inc.	U.S.	8509690B2	13246617	9/27/2011
Aliphcom	U.S.		13247975	9/28/2011
Aliphcom	U.S.	8804986B2	13270976	10/11/2011
Aliphcom	U.S.		13346719	1/9/2012
Aliphcom	U.S.		13361919	1/30/2012
Aliphcom	U.S.		13374746	1/9/2012

Aliphcom	U.S.		13405240	2/25/2012
Aliphcom	U.S.		13405241	2/25/2012
Aliphcom	U.S.		13420568	3/14/2012
Aliphcom	U.S.		13421576	3/15/2012
Aliphcom	U.S.	8529811B2	13427839	3/22/2012
Aliphcom, Inc.	U.S.		13431725	3/27/2012
Aliphcom	U.S.		13433204	3/28/2012
Aliphcom	U.S.		13433208	3/28/2012
Aliphcom	U.S.		13433213	3/28/2012
Aliphcom, Inc.	U.S.	8682018B2	13436765	3/30/2012
Aliphcom, Inc.	U.S.	8446275B2	13454040	4/23/2012
Aliphcom	U.S.		13491345	6/7/2012

Aliphcom	U.S.		13491524	6/7/2012
Aliphcom	U.S.		13492770	6/8/2012
Aliphcom	U.S.		13492776	6/8/2012
Aliphcom	U.S.		13492857	6/9/2012
Aliphcom	U.S.		13528830	6/20/2012
AliphCom	U.S.		13552462	7/18/2012
Aliphcom	U.S.		13561033	7/28/2012
AliphCom	U.S.		13627997	9/26/2012
AliphCom, Inc.	U.S.		13666932	11/1/2012
AliphCom, Inc.	U.S.		13669356	11/5/2012
AliphCom, Inc.	U.S.		13669369	11/5/2012
AliphCom, Inc.	U.S.		13669375	11/5/2012
AliphCom	U.S.		13670419	11/6/2012
AliphCom	U.S.		13672392	11/8/2012
Aliphcom	U.S.		13672398	11/8/2012
AliphCom	U.S.		13672451	11/8/2012

Aliphcom	U.S.		13672671	11/8/2012
AliphCom	U.S.		13673846	11/9/2012
AliphCom	U.S.		13673857	11/9/2012
AliphCom	U.S.		13674080	11/11/2012
AliphCom	U.S.	8934654B2	13802266	3/13/2013
AliphCom	U.S.		13802283	3/13/2013
AliphCom	U.S.		13802305	3/13/2013
AliphCom	U.S.		13802319	3/13/2013
AliphCom	U.S.		13802409	3/13/2013
AliphCom	U.S.		13802425	3/13/2013
AliphCom	U.S.		13802442	3/13/2013
Aliphcom, Inc.	U.S.		13802528	3/13/2013
AliphCom	U.S.		13802646	3/13/2013
Aliphcom	U.S.		13802674	3/13/2013
Aliphcom	U.S.		13802689	3/13/2013
Aliphcom	U.S.		13827683	3/14/2013
AliphCom	U.S.		13827754	3/14/2013
AliphCom	U.S.		13830770	3/14/2013
Aliphcom	U.S.		13830860	3/14/2013
Aliphcom	U.S.		13830927	3/14/2013
Aliphcom	U.S.		13831139	3/14/2013

AliphCom	U.S.		13831260	3/14/2013
AliphCom	U.S.		13831301	3/14/2013
AliphCom	U.S.		13831447	3/14/2013
Aliphcom	U.S.		13831485	3/14/2013
AliphCom	U.S.		13831689	3/15/2013
AliphCom	U.S.		13831698	3/15/2013
Aliphcom	U.S.		13871843	4/26/2013
AliphCom	U.S.		13886173	5/2/2013
Aliphcom	U.S.		13886254	5/2/2013
AliphCom	U.S.		13890143	5/8/2013
AliphCom	U.S.		13894850	5/15/2013
Aliphcom	U.S.		13898451	5/20/2013
AliphCom	U.S.		13898465	5/20/2013
AliphCom	U.S.		13898472	5/21/2013
AliphCom	U.S.		13898474	5/21/2013
AliphCom	U.S.		13900943	5/23/2013
AliphCom	U.S.		13906109	5/30/2013
AliphCom	U.S.		13906244	5/30/2013
AliphCom	U.S.		13917225	6/13/2013
Aliphcom	U.S.		13919307	6/17/2013
Aliphcom	U.S.		13919339	6/17/2013
AliphCom	U.S.		13919919	6/17/2013

AliphCom	U.S.		13929718	6/27/2013
Aliphcom	U.S.		13942503	7/15/2013
Aliphcom	U.S.		13942623	7/15/2013
Aliphcom	U.S.		13942674	7/15/2013
Aliphcom, Inc.	U.S.		13948160	7/22/2013
AliphCom	U.S.		13952532	7/26/2013
AliphCom	U.S.		13952552	7/26/2013
AliphCom	U.S.		13954331	7/30/2013
AliphCom	U.S.		13954367	7/30/2013
AliphCom	U.S.		13957383	8/1/2013
Aliphcom	U.S.		13959707	8/5/2013
Aliphcom, Inc.	U.S.		13959708	8/5/2013
Aliphcom	U.S.		13959709	8/5/2013
AliphCom	U.S.		13967317	8/14/2013
AliphCom	U.S.		14029300	9/17/2013
AliphCom	U.S.		14058125	10/18/2013
AliphCom	U.S.		14064189	10/27/2013
AliphCom	U.S.		14065393	10/28/2013
AliphCom	U.S.		14065400	10/28/2013
AliphCom	U.S.		14065415	10/28/2013
AliphCom	U.S.		14065419	10/29/2013
AliphCom	U.S.		14067444	10/30/2013
AliphCom	U.S.		14068551	10/31/2013
AliphCom	U.S.		14069008	10/31/2013
AliphCom	U.S.		14069031	10/31/2013

AliphCom	U.S.		14070437	11/1/2013
Aliphcom	U.S.		14070443	11/1/2013
AliphCom	U.S.		14070446	11/1/2013
AliphCom	U.S.		14070452	11/1/2013
AliphCom	U.S.		14071531	11/4/2013
AliphCom	U.S.		14071546	11/4/2013
AliphCom	U.S.		14073550	11/6/2013
AliphCom	U.S.		14073696	11/6/2013
AliphCom	U.S.		14075523	11/8/2013
AliphCom	U.S.		14076014	11/8/2013
AliphCom	U.S.		14079632	11/13/2013
AliphCom	U.S.		14105119	12/12/2013
AliphCom	U.S.		14105127	12/12/2013
AliphCom	U.S.		14105146	12/12/2013
AliphCom	U.S.		14105157	12/12/2013
AliphCom	U.S.		14105159	12/12/2013
AliphCom	U.S.		14105172	12/12/2013
AliphCom	U.S.		14105173	12/12/2013
AliphCom	U.S.		14144494	12/30/2013
AliphCom	U.S.		14144499	12/30/2013
AliphCom	U.S.		14144505	12/30/2013
AliphCom	U.S.		14144512	12/30/2013
AliphCom	U.S.		14144513	12/30/2013
AliphCom	U.S.		14144514	12/30/2013
AliphCom	U.S.		14144516	12/30/2013
AliphCom	U.S.		14144517	12/30/2013
AliphCom	U.S.		14144518	12/30/2013
AliphCom	U.S.		14144519	12/30/2013
AliphCom	U.S.		14144521	12/30/2013
AliphCom	U.S.		14144524	12/30/2013

AliphCom	U.S.		14145849	12/31/2013
AliphCom	U.S.		14145852	12/31/2013
AliphCom	U.S.		14145856	12/31/2013
Aliphcom	U.S.		14145879	12/31/2013
AliphCom	U.S.		14145887	12/31/2013
AliphCom	U.S.		14145894	12/31/2013
AliphCom	U.S.		14149805	1/7/2014
AliphCom	U.S.		14181589	2/14/2014
AliphCom	U.S.		14181595	2/18/2014
AliphCom	U.S.		14183425	2/18/2014
AliphCom	U.S.		14183463	2/18/2014
AliphCom	U.S.		14183472	2/18/2014
AliphCom	U.S.		14183490	2/18/2014
AliphCom	U.S.		14183491	2/18/2014
AliphCom	U.S.		14183493	2/18/2014
AliphCom	U.S.		14187317	2/23/2014
AliphCom	U.S.		14188602	2/24/2014
AliphCom	U.S.		14191284	2/26/2014
AliphCom	U.S.		14192432	2/27/2014
AliphCom	U.S.		14192463	2/27/2014
AliphCom	U.S.		14192610	2/27/2014
AliphCom	U.S.		14192620	2/27/2014
AliphCom	U.S.		14194424	2/28/2014
AliphCom	U.S.		14194495	2/28/2014
AliphCom	U.S.		14203464	3/10/2014
AliphCom	U.S.		14203467	3/10/2014
AliphCom	U.S.		14205138	3/11/2014
AliphCom	U.S.		14205151	3/11/2014
AliphCom	U.S.		14205215	3/11/2014
AliphCom	U.S.		14205263	3/11/2014

AliphCom	U.S.		14207183	3/12/2014
AliphCom	U.S.		14207203	3/12/2014
AliphCom	U.S.		14207221	3/12/2014
AliphCom	U.S.		14207235	3/12/2014
AliphCom	U.S.		14207243	3/12/2014
AliphCom	U.S.		14207263	3/12/2014
AliphCom	U.S.		14207420	3/12/2014
AliphCom	U.S.		14207429	3/12/2014
AliphCom	U.S.		14209329	3/13/2014
AliphCom	U.S.		14209690	3/13/2014
AliphCom	U.S.		14209959	3/13/2014
AliphCom	U.S.		14210201	3/13/2014
AliphCom	U.S.		14210234	3/13/2014
AliphCom	U.S.		14212832	3/14/2014
AliphCom	U.S.		14213439	3/14/2014
AliphCom	U.S.		14214065	3/14/2014
AliphCom	U.S.		14214086	3/14/2014
AliphCom	U.S.		14214254	3/14/2014
AliphCom	U.S.		14215038	3/16/2014
AliphCom	U.S.		14215047	3/16/2014
AliphCom	U.S.		14215051	3/16/2014
AliphCom	U.S.		14219648	3/19/2014
Aliphcom, Inc.	U.S.		14224868	3/25/2014
AliphCom	U.S.		14225339	3/25/2014
AliphCom	U.S.		14243747	4/2/2014
AliphCom	U.S.		14244677	4/3/2014
AliphCom	U.S.		14244759	4/3/2014
AliphCom	U.S.		14246971	4/7/2014
AliphCom	U.S.		14260221	4/23/2014
AliphCom	U.S.		14266697	4/30/2014
AliphCom	U.S.		14270242	5/5/2014
AliphCom	U.S.		14270249	5/5/2014

AliphCom	U.S.		14272464	5/7/2014
AliphCom	U.S.		14279253	5/15/2014
AliphCom	U.S.		14281856	5/19/2014
AliphCom	U.S.		14289617	5/28/2014
AliphCom	U.S.		14301220	6/10/2014
AliphCom	U.S.		14301227	6/10/2014
AliphCom	U.S.		14313895	6/24/2014
AliphCom	U.S.		14328665	7/10/2014
AliphCom	U.S.		14389766	9/30/2014
AliphCom	U.S.		14421815	2/13/2015
AliphCom	U.S.		14445051	7/28/2014
AliphCom	U.S.		14452496	8/5/2014
AliphCom	U.S.		14457051	8/11/2014
AliphCom	U.S.		14463556	8/19/2014
AliphCom	U.S.		14468327	8/25/2014
AliphCom, Inc.	U.S.	D0582398S	29299133	12/19/2007
AliphCom, Inc.	U.S.	D0584294S	29299134	12/19/2007
AliphCom, Inc.	U.S.	D0582898S	29299135	12/19/2007
AliphCom, Inc.	U.S.	D0585881S	29299139	12/19/2007
Aliphcom	U.S.	D0632674S	29353843	1/14/2010
Aliphcom	U.S.	D0632675S	29353844	1/14/2010
Aliphcom	U.S.	D0645026S	29353846	1/14/2010
Aliphcom	U.S.	D0632676S	29353847	1/14/2010

Aliphcom	U.S.	D0633480S	29354212	1/20/2010
Aliphcom	U.S.	D0648709S	29377627	10/22/2010
Aliphcom	U.S.	D0648726S	29377628	10/22/2010
Aliphcom	U.S.	D0645024S	29378325	11/2/2010
AliphCom	U.S.	D0655689S	29378327	11/2/2010
AliphCom	U.S.	D0652019S	29378328	11/2/2010
AliphCom	U.S.	D0652020S	29378329	11/2/2010
AliphCom	U.S.	D0641341S	29383495	1/18/2011
AliphCom	U.S.	D0664948S	29383712	1/20/2011
AliphCom	U.S.	D0664949S	29383714	1/20/2011
AliphCom	U.S.	D0653149S	29393916	6/10/2011
AliphCom	U.S.	D0695758S	29405617	11/3/2011
AliphCom	U.S.	D0696272S	29405623	11/3/2011
AliphCom	U.S.	D0695759S	29405625	11/3/2011
AliphCom	U.S.	D0695760S	29405626	11/3/2011
AliphCom	U.S.	D0695761S	29405627	11/3/2011
AliphCom	U.S.	D0696273S	29405628	11/3/2011
AliphCom	U.S.	D0696274S	29405630	11/3/2011

AliphCom	U.S.	D0695762S	29405631	11/3/2011
AliphCom	U.S.	D0699252S	29405633	11/3/2011
AliphCom	U.S.	D0695763S	29405634	11/3/2011
AliphCom	U.S.	D0696275S	29405635	11/3/2011
AliphCom	U.S.	D0695764S	29405636	11/3/2011
AliphCom	U.S.	D0695765S	29405637	11/3/2011
AliphCom	U.S.	D0695766S	29405638	11/3/2011
AliphCom	U.S.	D0695767S	29405639	11/3/2011
AliphCom	U.S.	D0695768S	29405640	11/3/2011
AliphCom	U.S.	D0695769S	29405641	11/3/2011
AliphCom	U.S.	D0695770S	29405642	11/3/2011
AliphCom	U.S.	D0695771S	29405643	11/3/2011
AliphCom	U.S.	D0695772S	29405644	11/3/2011
AliphCom	U.S.	D0695773S	29405645	11/3/2011
AliphCom	U.S.	D0696276S	29405646	11/3/2011
AliphCom	U.S.	D0678864S	29413571	2/16/2012
AliphCom	U.S.	D0678865S	29413572	2/16/2012

AliphCom	U.S.	D0678244S	29413573	2/16/2012
AliphCom	U.S.	D0698757S	29445283	2/8/2013
AliphCom	U.S.	D0698758S	29445286	2/8/2013
AliphCom	U.S.	D0698759S	29445287	2/8/2013
AliphCom	U.S.	D0710325S	29459899	7/3/2013
AliphCom	U.S.	D0713389S	29459900	7/3/2013
AliphCom	U.S.		62019327	6/30/2014
AliphCom	U.S.		62067428	10/22/2014
AliphCom	U.S.		62107411	1/25/2015
AliphCom	U.S.		14/121,355	8/22/2014
AliphCom	U.S.		14/121,463	9/8/2014
AliphCom	U.S.		14/121,465	9/8/2014
AliphCom	U.S.		14/121,938	11/4/2014
AliphCom	U.S.		14/121,939	11/4/2014
AliphCom	U.S.		14/121,940	11/4/2014
AliphCom	U.S.		14/121,941	11/4/2014
AliphCom	U.S.		14/121,942	11/4/2014
AliphCom	U.S.		14/121,943	11/4/2014
AliphCom	U.S.		14/121,944	11/4/2014
AliphCom	U.S.		14/121,947	11/4/2014
AliphCom	U.S.		14/121,948	11/4/2014
AliphCom	U.S.		14/313901	6/24/2014
AliphCom	U.S.		14/480,048	9/8/2014
AliphCom	U.S.		14/480,070	9/8/2014
AliphCom	U.S.		14/480,427	9/8/2014
AliphCom	U.S.		14/480,446	9/8/2014
AliphCom	U.S.		14/480,452	9/8/2014
AliphCom	U.S.		14/480,462	9/8/2014
AliphCom	U.S.		14/480,628	9/8/2014
AliphCom	U.S.		14/486,978	9/15/2014
AliphCom	U.S.		14/486,997	9/15/2014

AliphCom	U.S.		14/488,042	9/16/2014
AliphCom	U.S.		14/493,298	9/22/2014
AliphCom	U.S.		14/519,116	10/20/2014
AliphCom	U.S.		14/526,503	10/28/2014
AliphCom	U.S.		14/532,789	11/4/2014
AliphCom	U.S.		14/541,064	11/13/2014
AliphCom	U.S.		14/541,134	11/13/2014
AliphCom	U.S.		14/541,135	11/13/2014
AliphCom	U.S.		14/578,297	12/19/2014
AliphCom	U.S.		14/596,127	1/13/2015
AliphCom	U.S.		14/606,995	1/27/2015
AliphCom	U.S.		14/637,387	3/3/2015
AliphCom	U.S.		14/640,013	3/5/2015
AliphCom	U.S.		14/656,683	3/12/2015
AliphCom	U.S.		14/659,521	3/16/2015
BodyMedia, Inc.	U.S.	6,527,711	9419600	10/18/1999
BodyMedia, Inc.	U.S.	7,689,437	9595660	6/16/2000
BodyMedia, Inc.	U.S.	6605038B1	9602537	6/23/2000
BodyMedia, Inc.	U.S.		9620579	7/20/2000
BodyMedia, Inc.	U.S.	6595929B2	9822890	3/30/2001
BodyMedia, Inc.	U.S.	7261690B2	9923181	8/6/2001
BodyMedia, Inc.	U.S.	7020508B2	10227575	8/22/2002
Bodymedia, Inc.	U.S.	7153262B2	10313255	12/6/2002
BodyMedia	U.S.		10612894	7/7/2003
BodyMedia, Inc.	U.S.	8157731B2	10682293	10/9/2003
BodyMedia, Inc.	U.S.	7285090B2	10682759	10/9/2003
BodyMedia, Inc.	U.S.	8398546B2	10940214	9/13/2004
BodyMedia, Inc.	U.S.	7502643B2	10940889	9/13/2004
BodyMedia, Inc.	U.S.	8663106B2	11088002	3/22/2005

Bodymedia, Inc.	U.S.		11239748	9/30/2005
Bodymedia, Inc.	U.S.	8073707	11247049	10/11/2005
Bodymedia, Inc.	U.S.	8961413	11434949	5/16/2006
Bodymedia, Inc.	U.S.	8403845	11481147	7/5/2006
BodyMedia, Inc.	U.S.		11582896	10/17/2006
Bodymedia, Inc.	U.S.	8961414B2	11724373	3/15/2007
Bodymedia, Inc.	U.S.	7,959,567	11876623	10/22/2007
Bodymedia, Inc.	U.S.		11925906	10/27/2007
BodyMedia, Inc.	U.S.	8708904B2	11925965	10/28/2007
Bodymedia, Inc.	U.S.		11928039	10/30/2007
Bodymedia, Inc.	U.S.		11930036	10/30/2007
Bodymedia, Inc.	U.S.		11930053	10/30/2007
Bodymedia, Inc.	U.S.		11930081	10/30/2007
Bodymedia, Inc.	U.S.	8641612B2	11930091	10/31/2007
Bodymedia, Inc.	U.S.	8,968,196	11930092	10/31/2007
Bodymedia, Inc.	U.S.	8852098B2	11930094	10/31/2007

BodyMedia, Inc.	U.S.		12033722	2/19/2008
BodyMedia, Inc.	U.S.		12033731	2/19/2008
BodyMedia, Inc.	U.S.		12033741	2/19/2008
BodyMedia, Inc.	U.S.		12033746	2/19/2008
BodyMedia, Inc.	U.S.		12033751	2/19/2008
BodyMedia, Inc.	U.S.	8382590B2	12033753	2/19/2008
BodyMedia, Inc.	U.S.	8275635B2	12033760	2/19/2008
BodyMedia, Inc.	U.S.		12033766	2/19/2008
BodyMedia	U.S.		12352911	1/13/2009
BodyMedia, Inc.	U.S.	8369936B2	12840109	7/20/2010
BodyMedia, Inc. Virginia Commonwealth University	U.S.		13130282	6/18/2012
Bodymedia, Inc.	U.S.	8870766	13291879	11/8/2011
Bodymedia, Inc.	U.S.		13291982	11/8/2011
BodyMedia, Inc.	U.S.		13734433	1/4/2013
BodyMedia, Inc.	U.S.		13761409	2/7/2013
BODYMEDIA, INC.	U.S.		13761557	2/7/2013

BodyMedia, Inc.	U.S.		14058485	10/21/2013
BodyMedia, Inc.	U.S.		14058493	10/21/2013
BodyMedia, Inc.	U.S.	8979763	14058501	10/21/2013
BodyMedia, Inc.	U.S.		14058563	10/21/2013
BodyMedia, Inc.	U.S.		14059054	10/21/2013
BodyMedia, Inc.	U.S.		14059072	10/21/2013
BodyMedia, Inc.	U.S.		14059117	10/21/2013
BODYMEDIA, INC.	U.S.		14060004	10/22/2013
BodyMedia, Inc.	U.S.		14060010	10/22/2013
BodyMedia, Inc.	U.S.		14060029	10/22/2013
BodyMedia, Inc.	U.S.		14060047	10/22/2013
BodyMedia, Inc.	U.S.		14060072	10/22/2013
BodyMedia, Inc.	U.S.		14060082	10/22/2013
BodyMedia, Inc.	U.S.		14060092	10/22/2013
BODYMEDIA, INC.	U.S.		14060122	10/22/2013
BodyMedia, Inc.	U.S.		14081369	11/15/2013
BodyMedia, Inc.	U.S.		14081406	11/15/2013
BodyMedia, Inc.	U.S.		14081880	11/15/2013
BodyMedia, Inc.	U.S.		14081889	11/15/2013
BodyMedia, Inc.	U.S.		14081901	11/15/2013
BodyMedia, Inc.	U.S.		14081928	11/15/2013
BodyMedia, Inc.	U.S.		14081935	11/15/2013
BodyMedia, Inc.	U.S.		14081942	11/15/2013
BodyMedia, Inc.	U.S.		14081951	11/15/2013
BodyMedia, Inc.	U.S.		14081956	11/15/2013
BodyMedia, Inc.	U.S.		14081967	11/15/2013
BodyMedia, Inc.	U.S.		14081972	11/15/2013
BodyMedia, Inc.	U.S.		14081979	11/15/2013
BodyMedia, Inc.	U.S.		14082070	11/15/2013
BodyMedia, Inc.	U.S.		14082176	11/17/2013
BodyMedia, Inc.	U.S.		14082178	11/17/2013
BodyMedia, Inc.	U.S.		14082179	11/17/2013
BODYMEDIA, INC.	U.S.		14082180	11/17/2013
BodyMedia, Inc.	U.S.		14082183	11/17/2013
BODYMEDIA, INC.	U.S.		14082185	11/17/2013
BodyMedia, Inc.	U.S.		14082186	11/17/2013
BodyMedia, Inc.	U.S.		14082188	11/17/2013
BodyMedia, Inc.	U.S.		14082189	11/17/2013
BodyMedia, Inc.	U.S.		14082190	11/17/2013
BodyMedia, Inc.	U.S.		14082192	11/17/2013
BodyMedia, Inc.	U.S.		14083372	11/18/2013

BodyMedia, Inc.	U.S.		14083382	11/18/2013
BodyMedia, Inc.	U.S.		14083389	11/18/2013
BodyMedia, Inc.	U.S.		14083397	11/18/2013
BodyMedia, Inc.	U.S.		14083401	11/18/2013
BodyMedia, Inc.	U.S.		14083404	11/18/2013
BodyMedia, Inc.	U.S.		14083407	11/18/2013
BodyMedia, Inc.	U.S.		14133607	12/18/2013
BodyMedia, Inc.	U.S.		14133610	12/18/2013
BodyMedia, Inc.	U.S.		14133612	12/18/2013
BodyMedia, Inc.	U.S.		14133615	12/18/2013
BodyMedia, Inc.	U.S.		14133619	12/18/2013
BodyMedia, Inc.	U.S.		14133620	12/18/2013
BodyMedia, Inc.	U.S.		14133622	12/18/2013
BodyMedia, Inc.	U.S.		14133625	12/18/2013
BodyMedia, Inc.	U.S.		14133626	12/18/2013
BodyMedia, Inc.	U.S.		14133634	12/18/2013
BodyMedia, Inc.	U.S.		14133638	12/19/2013
BodyMedia, Inc.	U.S.		14133640	12/19/2013
BodyMedia, Inc.	U.S.		14133641	12/19/2013
BodyMedia, Inc.	U.S.		14136750	12/20/2013
BodyMedia, Inc.	U.S.		14137027	12/20/2013
BodyMedia, Inc.	U.S.		14137087	12/20/2013
BodyMedia, Inc.	U.S.		14137126	12/20/2013
BodyMedia, Inc.	U.S.		14137233	12/20/2013
BodyMedia, Inc.	U.S.		14138030	12/21/2013
BodyMedia, Inc.	U.S.		14138033	12/21/2013
BodyMedia, Inc.	U.S.		14138042	12/21/2013
BodyMedia, Inc.	U.S.		14138043	12/21/2013
BodyMedia, Inc.	U.S.		14138046	12/21/2013
BodyMedia, Inc.	U.S.		14139871	12/24/2013
BodyMedia, Inc.	U.S.		14139872	12/24/2013
BodyMedia, Inc.	U.S.		14139873	12/24/2013
Bodymedia, Inc.	U.S.		14139875	12/24/2013
BodyMedia, Inc.	U.S.		14221506	3/21/2014
BODYMEDIA, INC.	U.S.		14248576	4/9/2014
BodyMedia, Inc.	U.S.		14248776	4/9/2014
BodyMedia	U.S.		14248830	4/9/2014
BodyMedia	U.S.		14248853	4/9/2014
BodyMedia	U.S.		14248885	4/9/2014
BodyMedia, Inc.	U.S.		14249135	4/9/2014

BodyMedia, Inc.	U.S.		14249211	4/9/2014
BodyMedia	U.S.		14249235	4/9/2014
BodyMedia, Inc.	U.S.		14249262	4/9/2014
BodyMedia, Inc.	U.S.		14249290	4/9/2014
BodyMedia, Inc.	U.S.		14249314	4/9/2014
BodyMedia	U.S.		14249318	4/9/2014
BodyMedia	U.S.		14249328	4/9/2014
BodyMedia	U.S.		14252090	4/14/2014
BodyMedia	U.S.		14284947	5/22/2014
BodyMedia	U.S.		14285018	5/22/2014
BodyMedia	U.S.		14285036	5/22/2014
BodyMedia	U.S.		14285092	5/22/2014
BodyMedia, Inc.	U.S.		14285159	5/22/2014
BodyMedia, Inc.	U.S.		14285194	5/22/2014
BodyMedia	U.S.		14285232	5/22/2014
BodyMedia, Inc.	U.S.		14292105	5/30/2014
BodyMedia, Inc.	U.S.		14292368	5/30/2014
BodyMedia, Inc.	U.S.		14292735	5/30/2014
BodyMedia	U.S.		14292831	5/31/2014
BodyMedia	U.S.		14292833	5/31/2014
BodyMedia	U.S.		14336413	7/21/2014
BodyMedia	U.S.		14336448	7/21/2014
BodyMedia	U.S.		14336539	7/21/2014
BodyMedia	U.S.		14336571	7/21/2014
BodyMedia	U.S.		14336598	7/21/2014
BodyMedia	U.S.		14336625	7/21/2014
BodyMedia, Inc.	U.S.	D0439981S	29127587	8/9/2000
BodyMedia, Inc.	U.S.	D0451604S	29129931	9/25/2000
BodyMedia, Inc.	U.S.	D0460971S	29143975	6/21/2001
BodyMedia, Inc.	U.S.	D632396	29256362	3/20/2006
BodyMedia, Inc.	U.S.	D631552	29256753	3/24/2006

BodyMedia, Inc.	U.S.	D0645968S	29383860	1/24/2011
BodyMedia, Inc.	U.S.	D0698028S	29434003	10/9/2012
BodyMedia	U.S.		14/509,034	10/7/2014
BodyMedia	U.S.		14/526,499	10/28/2014
BodyMedia	U.S.		14/630,618	2/24/2015
BodyMedia	U.S.		14/630,618	2/24/2015
BodyMedia	U.S.		14/636,157	3/2/2015
BodyMedia	U.S.		14/636,158	3/2/2015
BodyMedia, Inc.	U.S.		95/002,354	9/14/2012
BodyMedia, Inc.	U.S.		95/002,360	9/14/2012
BodyMedia, Inc.	U.S.		95/002,366	9/14/2012
BodyMedia, Inc.	U.S.		95/002,367	9/14/2012
BodyMedia, Inc.	U.S.		95/002,371	9/14/2014
Bodymedia, Inc.	U.S.		95/002,376	9/14/2012
BodyMedia, Inc.	U.S.		95/002,382	9/14/2012
Project Paris Acquisition LLC	U.S.		14039258	9/27/2013
University of Maryland, College park Office of Technology Commercialization	U.S.	6,399,306	9622910	9/5/2000
University of Maryland, College park Office of Technology Commercialization	U.S.	6743587	9986989	11/13/2001
	U.S.		29445284	2/8/2013

	U.S.		29466527	9/9/2013
	U.S.		29466531	9/9/2013
	U.S.		29466534	9/9/2013
	U.S.		29466536	
	U.S.		29466539	
	U.S.		29470963	10/25/2013
	U.S.		29470964	10/25/2013
	U.S.		29470965	10/25/2013
	U.S.		29470966	
	U.S.		29470967	
	U.S.		29470968	
	U.S.		29477005	
	U.S.		29477006	
	U.S.		29/478,533	1/6/2014
	U.S.		29/479,052	1/10/2014
	U.S.		29/479,055	1/10/2014
	U.S.		29/479,058	1/10/2014
	U.S.		29/479,060	1/10/2014
	U.S.		29/479,064	1/10/2014
	U.S.		29/479,066	1/10/2014
	U.S.		29/479,069	1/10/2014
	U.S.		29/479,071	1/10/2014
	U.S.		29/479,074	1/10/2014
	U.S.		29/479,077	1/10/2014
	U.S.		29/479,078	1/10/2014
	U.S.		29/479,079	1/10/2014
	U.S.		29/482,849	2/21/2014
	U.S.		29/482,850	2/21/2014
	U.S.		29/482,851	2/21/2014
	U.S.		29/482,852	2/21/2014
	U.S.		29/482,854	2/21/2014
	U.S.		29/482,855	2/21/2014
	U.S.		29/482,856	2/21/2014
	U.S.		29/485,103	3/14/2014
	U.S.		29/485,118	3/16/2014
	U.S.		29/495,368	6/30/2014
	U.S.		29/495,369	6/30/2014
	U.S.		29/495,373	6/30/2014
	U.S.		29/495,376	6/30/2014
	U.S.		29/495,380	6/30/2014
	U.S.		29/495,384	6/30/2014

	U.S.		29/495,387	6/30/2014
	U.S.		29/495,389	6/30/2014
	U.S.		29/495,390	6/30/2014
	U.S.		29/495,394	6/30/2014
	U.S.		29/495,395	6/30/2014
	U.S.		29/495,397	6/30/2014
	U.S.		29/495,399	6/30/2014
	U.S.		29/495,400	6/30/2014
	U.S.		29/495,404	6/30/2014
	U.S.		29/495,405	6/30/2014
	U.S.		29/495,406	6/30/2014
	U.S.		29/495,407	6/30/2014
	U.S.		29/495,669	7/2/2014
	U.S.		29/495,670	7/2/2014
	U.S.		29/495,674	7/2/2014
	U.S.		29/508,180	11/4/2014
	U.S.		29/508,184	11/4/2014
	U.S.		29/508,185	11/4/2014
	U.S.		29/508,187	11/4/2014
	U.S.		29/508,193	11/4/2014
	U.S.		29/508,196	11/4/2014
	U.S.		29/508,200	11/4/2014
	U.S.		29/508,205	11/4/2014
	U.S.		29/508,207	11/4/2014
	U.S.		29/516,012	1/28/2015
	U.S.		29/516,014	1/28/2015
	U.S.		29/516,015	1/28/2015
	U.S.		29/516,016	1/28/2015
	U.S.		29/516,017	1/28/2015
	U.S.		29/517,054	2/9/2015
	U.S.		29/517,056	2/9/2015

Patent License

Small Entity Declaration

Schedule A – Patents assigned to *Assignee*

APPLICATION NUMBER	FILING DATE	PATENT NUMBER	ISSUE DATE
12/139333	6/13/2008	8,503,691	8/6/2013

Small Entity Declaration

ASSERTION OF SMALL ENTITY STATUS
PURSUANT TO 37 C.F.R. §1.27 (c)(1)

Commissioner for Patents
Mail Stop M Correspondence
P.O. Box 1450
Alexandria, VA 22313-1450

Sir:

This communication hereby asserts that the above-identified patents are entitled to small entity status.

Respectfully submitted,

Luke Conticello

Signature

Luke Conticello

Printed Name

Assignee

Title

Reg. # if US Attorney_____

COMPANY or FIRM NAME AND ADDRESS:

JAWB Acquisition LLC
321 West 44th Street
New York, NY 10036

Docket No.: 122174-10110
(PATENT)

IN THE UNITED STATES PATENT AND TRADEMARK OFFICE

In re Letters Patent of:
Gregory C. Burnett

Patent No.: 8,503,691

Issued: August 6, 2013

For: VIRTUAL MICROPHONE ARRAYS USING DUAL OMNIDIRECTIONAL MICROPHONE ARRAY (DOMA)

REQUEST FOR CERTIFICATE OF CORRECTION
PURSUANT TO 37 C.F.R. § 1.323

Attention: Certificate of Correction Branch
Commissioner for Patents
P.O. Box 1450
Alexandria, VA 22313-1450

Dear Sir:

Upon reviewing the above-identified patent, Patentee noted typographical errors which should be corrected.

In the Claims:

At column 34, claim number 1, line number 49, please add --noise-- between "response to" and "is being non-zero" to read as follows: --response to noise is being non-zero--

The error was found in the response to final office action as filed by applicant with the U.S. Patent and Trademark Office on September 10, 2012.

Support for this change can be found on page 15 of the response to final office action dated September 10, 2012 as well as in the claim amendments for claim 29.

The error now sought to be corrected is an inadvertent typographical error the correction of which does not involve new matter or require reexamination.

Transmitted herewith is a proposed Certificate of Correction effecting such amendment. Patentee respectfully solicits the granting of the requested Certificate of Correction.

Please charge our Deposit Account No. 141449 in the amount of $160.00 covering the fee set forth in 37 C.F.R. § 1.20(a). The Director is hereby authorized to charge any deficiency in the fees filed, asserted to be filed or which should have been filed herewith (or with any paper hereafter filed in this application by this firm) to our Deposit Account No. 141449, under Order No. 122174-10110.

Dated: October 7, 2021

Respectfully submitted,

Electronic signature: /Randolph E. Treece/
Randolph E. Treece
Registration No.: 69,848
NUTTER MCCLENNEN & FISH LLP
Seaport West
155 Seaport Boulevard
Boston, Massachusetts 02210-2604
(617) 439-2274
(617) 310-9274 (Fax)
Agent for Applicant

5328008.1

PTO/SB/44 (09-07)
Approved for use through 03/31/2023. OMB 0651-0033
U.S. Patent and Trademark Office; U.S. DEPARTMENT OF COMMERCE
Under the Paperwork Reduction Act of 1995, no persons are required to respond to a collection of information unless it displays a valid OMB control number.
(Also Form PTO-1050)

UNITED STATES PATENT AND TRADEMARK OFFICE
CERTIFICATE OF CORRECTION

PATENT NO.	:	8,503,691
APPLICATION NO.	:	12/139,333
ISSUE DATE	:	August 6, 2013
INVENTOR(S)	:	Gregory C. Burnett

It is certified that an error appears or errors appear in the above-identified patent and that said Letters Patent is hereby corrected as shown below:

At column 34, claim number 1, line number 49, please add --noise-- between “response to” and “is being non-zero” to read as follows: --response to noise is being non-zero--

5328009.1

MAILING ADDRESS OF SENDER (Please do not use Customer Number below):
Randolph E. Treece
NUTTER MCCLENNEN & FISH LLP 1
Seaport West
155 Seaport Boulevard
Boston, Massachusetts 02210-2604

PTO/SB/96 (11-18)
Approved for use through 11/30/2020. OMB 0651-0031
U.S. Patent and Trademark Office; U.S. DEPARTMENT OF COMMERCE
Under the Paperwork Reduction Act of 1995, no persons are required to respond to a collection of information unless it displays a valid OMB control number.

STATEMENT UNDER 37 CFR 3.73(b)

Applicant/Patent Owner: Gregory C. Burnett

Application No./Patent No.: 8,503,691 Filed/Issue Date: August 6, 2013

Titled: VIRTUAL MICROPHONE ARRAYS USING DUAL OMNIDIRECTIONAL MICROPHONE ARRAY (DOMA)

Jawbone Innovations, LLC (Name of Assignee), a Limited Liability Company (Type of Assignee, e.g., corporation, partnership, university, government agency, etc.)

states that it is:

1. [x] the assignee of the entire right, title, and interest in;
2. [ ] an assignee of less than the entire right, title, and interest in (The extent (by percentage) of its ownership interest is _____ %); or
3. [ ] the assignee of an undivided interest in the entirety of (a complete assignment from one of the joint inventors was made) the patent application/patent identified above, by virtue of either:

A. [ ] An assignment from the inventor(s) of the patent application/patent identified above. The assignment was recorded in the United States Patent and Trademark Office at Reel _____, Frame _____, or a copy* is attached.

OR

B. [x] A chain of title from the inventor(s), of the patent application/patent identified above, to the current assignee as follows:

1. From: Gregory C. Burnett To: AliphCom, Inc.
   The document was recorded in the United States Patent and Trademark Office at Reel 021532, Frame 0602, or a copy* is attached.
2. From: Gregory C. Burnett To: AliphCom
   The document was recorded in the United States Patent and Trademark Office at Reel 035543, Frame 0846, or a copy* is attached.
3. From: AliphCom dba Jawbone To: AliphCom, LLC
   The document was recorded in the United States Patent and Trademark Office at Reel 043637, Frame 0796, or a copy* thereof is attached.

[x] Additional documents in the chain of title are listed on a supplemental sheet(s).

[x] *As required by 37 CFR 3.73(b)(1)(i), if a copy/copies is/are attached, the documentary evidence of the chain of title from the original owner to the assignee was, or concurrently is being, submitted for recordation pursuant to 37 CFR 3.11.

[NOTE: A separate copy (*i.e.,* a true copy of the original assignment document(s)) must be submitted to Assignment Division in accordance with 37 CFR Part 3, to record the assignment in the records of the USPTO. See MPEP 302.1]

The undersigned (whose title is supplied below) is authorized to act on behalf of the assignee.

/Randolph E. Treece/	October 7, 2021
Signature	Date
Randolph E. Treece	69,848
Printed or Typed Name	Title or Registration Number

STATEMENT UNDER 37 CFR 3.73(b)

4. From: AliphCom To: AliphCom (assignment for the benefit of creditors), LLC
The document was recorded in the United States Patent and Trademark Office at
Reel 043711 , Frame 0001 , or for which a copy thereof is attached.

5. From: AliphCom, LLC To: JAWB Acquisition, LLC
The document was recorded in the United States Patent and Trademark Office at
Reel 043638 , Frame 0025 , or for which a copy thereof is attached.

6. From: AliphCom (assignment for the benefit of creditors), LLC To: JAWB Acquisition LLC
The document was recorded in the United States Patent and Trademark Office at
Reel 043746 , Frame 0693 , or for which a copy thereof is attached.

7. From: JAWB Acquisition LLC To: JI Audio Holdings LLC
The document was recorded in the United States Patent and Trademark Office at
Reel 056320 , Frame 0195 , or for which a copy thereof is attached.

8. From: JI Audio Holdings LLC To: Jawbone Innovations, LLC
The document was recorded in the United States Patent and Trademark Office at
Reel 056323 , Frame 0728 , or for which a copy thereof is attached.

9. From: _____ To: _____
The document was recorded in the United States Patent and Trademark Office at
Reel _____ , Frame _____ , or for which a copy thereof is attached.

Doc Code: PA..
Document Description: Power of Attorney

PTO/AIA/82B (07-13)
Approved for use through 03/31/2021. OMB 0651-0035
U.S. Patent and Trademark Office; U.S. DEPARTMENT OF COMMERCE
Under the Paperwork Reduction Act of 1995, no persons are required to respond to a collection of information unless it displays a valid OMB control number

POWER OF ATTORNEY BY APPLICANT

I hereby revoke all previous powers of attorney given in the application identified in either the attached transmittal letter or the boxes below.

Application Number	Filing Date

(Note: The boxes above may be left blank if information is provided on form PTO/AIA/82A.)

[x] I hereby appoint the Patent Practitioner(s) associated with the following Customer Number as my/our attorney(s) or agent(s), and to transact all business in the United States Patent and Trademark Office connected therewith for the application referenced in the attached transmittal letter (form PTO/AIA/82A) or identified above: 21125

OR

[ ] I hereby appoint Practitioner(s) named in the attached list (form PTO/AIA/82C) as my/our attorney(s) or agent(s), and to transact all business in the United States Patent and Trademark Office connected therewith for the patent application referenced in the attached transmittal letter (form PTO/AIA/82A) or identified above. (Note: Complete form PTO/AIA/82C.)

Please recognize or change the correspondence address for the application identified in the attached transmittal letter or the boxes above to:

[x] The address associated with the above-mentioned Customer Number

OR

[ ] The address associated with Customer Number:

OR

[ ] Firm or Individual Name					
Address					
City		State		Zip	
Country					
Telephone		Email			

I am the Applicant (if the Applicant is a juristic entity, list the Applicant name in the box):

Jawbone Innovations, LLC

[ ] Inventor or Joint Inventor (title not required below)

[ ] Legal Representative of a Deceased or Legally Incapacitated Inventor (title not required below)

[x] Assignee or Person to Whom the Inventor is Under an Obligation to Assign (provide signer's title if applicant is a juristic entity)

[ ] Person Who Otherwise Shows Sufficient Proprietary Interest (e.g., a petition under 37 CFR 1.46(b)(2) was granted in the application or is concurrently being filed with this document) (provide signer's title if applicant is a juristic entity)

SIGNATURE of Applicant for Patent

The undersigned (whose title is supplied below) is authorized to act on behalf of the applicant (e.g., where the applicant is a juristic entity).

Signature	DocuSigned by: York Eggleston 9708B74C3825434...	Date (Optional)	5/25/2021
Name	York Eggleston		
Title	Manager		

NOTE: Signature - This form must be signed by the applicant in accordance with 37 CFR 1.33. See 37 CFR 1.4 for signature requirements and certifications. If more than one applicant, use multiple forms.

[ ] Total of 1 forms are submitted.

Electronic Patent Application Fee Transmittal

Application Number:	12139333
Filing Date:	13-Jun-2008
Title of Invention:	VIRTUAL MICROPHONE ARRAYS USING DUAL OMNIDIRECTIONAL MICROPHONE ARRAY (DOMA)
First Named Inventor/Applicant Name:	Gregory C. Burnett
Filer:	Randolph E. Treece/Corinna Milasta
Attorney Docket Number:	JAL-050A

Filed as Small Entity

Filing Fees for Utility under 35 USC 111(a)

Description	Fee Code	Quantity	Amount	Sub-Total in USD($)
Basic Filing:				
Pages:				
Claims:				
Miscellaneous-Filing:				
Petition:				
Patent-Appeals-and-Interference:				
Post-Allowance-and-Post-Issuance:				
CERTIFICATE OF CORRECTION	2811	1	160	160

Description	Fee Code	Quantity	Amount	Sub-Total in USD($)
Extension-of-Time:				
Miscellaneous:				
		Total in USD ($)		**160**

Electronic Acknowledgement Receipt	
EFS ID:	43974759
Application Number:	12139333
International Application Number:	
Confirmation Number:	1204
Title of Invention:	VIRTUAL MICROPHONE ARRAYS USING DUAL OMNIDIRECTIONAL MICROPHONE ARRAY (DOMA)
First Named Inventor/Applicant Name:	Gregory C. Burnett
Customer Number:	15516
Filer:	Randolph E. Treece
Filer Authorized By:	
Attorney Docket Number:	JAL-050A
Receipt Date:	07-OCT-2021
Filing Date:	13-JUN-2008
Time Stamp:	15:19:16
Application Type:	Utility under 35 USC 111(a)

Payment information:

Submitted with Payment	yes
Payment Type	CARD
Payment was successfully received in RAM	$160
RAM confirmation Number	E202107F20142058
Deposit Account	141449
Authorized User	Randolph Treece
The Director of the USPTO is hereby authorized to charge indicated fees and credit any overpayment as follows: 37 CFR 1.21 (Miscellaneous fees and charges) 37 CFR 1.20 (Post Issuance fees)	

37 CFR 1.19 (Document supply fees)

37 CFR 1.17 (Patent application and reexamination processing fees)

37 CFR 1.16 (National application filing, search, and examination fees)

File Listing:

Document Number	Document Description	File Name	File Size(Bytes)/ Message Digest	Multi Part /.zip	Pages (if appl.)
1	Request for Certificate of Correction	120027-10110_request_cerfificate_correction.pdf	137580 8f0a7211170d9de20cc0775188b9b375b95a80f6	no	3
Warnings:					
Information:					
2	Assignee showing of ownership per 37 CFR 3.73	122174-10110_Statement_3_73.pdf	82683 5d1ea2bb2cf4035fbf29aab3acd1570c23b372ec	no	2
Warnings:					
Information:					
3	Power of Attorney	122174_Jawbone_POA_executed.pdf	223726 c3be042904ae588b8cd483853d8861bee83ff9f3	no	1
Warnings:					
The PDF file has been signed with a digital signature and the legal effect of the document will be based on the contents of the file not the digital signature.					
Information:					
4	Fee Worksheet (SB06)	fee-info.pdf	38287 6e13f79b7e791baa0d34f2fcb028bef512121219	no	2
Warnings:					
Information:					
			Total Files Size (in bytes):	482276	

This Acknowledgement Receipt evidences receipt on the noted date by the USPTO of the indicated documents, characterized by the applicant, and including page counts, where applicable. It serves as evidence of receipt similar to a Post Card, as described in MPEP 503.

New Applications Under 35 U.S.C. 111
If a new application is being filed and the application includes the necessary components for a filing date (see 37 CFR 1.53(b)-(d) and MPEP 506), a Filing Receipt (37 CFR 1.54) will be issued in due course and the date shown on this Acknowledgement Receipt will establish the filing date of the application.
National Stage of an International Application under 35 U.S.C. 371
If a timely submission to enter the national stage of an international application is compliant with the conditions of 35 U.S.C. 371 and other applicable requirements a Form PCT/DO/EO/903 indicating acceptance of the application as a national stage submission under 35 U.S.C. 371 will be issued in addition to the Filing Receipt, in due course.
New International Application Filed with the USPTO as a Receiving Office
If a new international application is being filed and the international application includes the necessary components for an international filing date (see PCT Article 11 and MPEP 1810), a Notification of the International Application Number and of the International Filing Date (Form PCT/RO/105) will be issued in due course, subject to prescriptions concerning national security, and the date shown on this Acknowledgement Receipt will establish the international filing date of the application.

UNITED STATES PATENT AND TRADEMARK OFFICE

UNITED STATES DEPARTMENT OF COMMERCE
United States Patent and Trademark Office
Address: COMMISSIONER FOR PATENTS
P.O. Box 1450
Alexandria, Virginia 22313-1450
www.uspto.gov

APPLICATION NUMBER	FILING OR 371(C) DATE	FIRST NAMED APPLICANT	ATTY. DOCKET NO./TITLE
12/139,333	06/13/2008	Gregory C. Burnett	JAL-050A

CONFIRMATION NO. 1204

POWER OF ATTORNEY NOTICE

15516
Kokka & Backus, PC
P.O. Box 60280
265 Cambridge Avenue
Palo Alto, CA 94306

OC000000129113925

Date Mailed: 10/15/2021

NOTICE REGARDING CHANGE OF POWER OF ATTORNEY

This is in response to the Power of Attorney filed 10/07/2021.

- The Power of Attorney to you in this application has been revoked by the assignee who has intervened as provided by 37 CFR 3.71. Future correspondence will be mailed to the new address of record(37 CFR 1.33).

Questions about the contents of this notice and the requirements it sets forth should be directed to the Office of Data Management, Application Assistance Unit, at **(571) 272-4000** or **(571) 272-4200** or **1-888-786-0101**.

/ngfissha/

UNITED STATES PATENT AND TRADEMARK OFFICE

UNITED STATES DEPARTMENT OF COMMERCE
United States Patent and Trademark Office
Address: COMMISSIONER FOR PATENTS
P.O. Box 1450
Alexandria, Virginia 22313-1450
www.uspto.gov

APPLICATION NUMBER	FILING OR 371(C) DATE	FIRST NAMED APPLICANT	ATTY. DOCKET NO./TITLE
12/139,333	06/13/2008	Gregory C. Burnett	JAL-050A

CONFIRMATION NO. 1204

POA ACCEPTANCE LETTER

21125
NUTTER MCCLENNEN & FISH LLP
SEAPORT WEST
155 SEAPORT BOULEVARD
BOSTON, MA 02210-2604

OC000000129113950

Date Mailed: 10/15/2021

NOTICE OF ACCEPTANCE OF POWER OF ATTORNEY

This is in response to the Power of Attorney filed 10/07/2021.

The Power of Attorney in this application is accepted. Correspondence in this application will be mailed to the above address as provided by 37 CFR 1.33.

Questions about the contents of this notice and the requirements it sets forth should be directed to the Office of Data Management, Application Assistance Unit, at **(571) 272-4000** or **(571) 272-4200** or **1-888-786-0101**.

/ngfissha/

UNITED STATES PATENT AND TRADEMARK OFFICE

CERTIFICATE OF CORRECTION

PATENT NO. : 8,503,691 B2
APPLICATION NO. : 12/139333
DATED : August 6, 2013
INVENTOR(S) : Gregory C. Burnett

It is certified that error appears in the above-identified patent and that said Letters Patent is hereby corrected as shown below:

In the Claims

Column 34, Claim number 1, Line number 49, please add --noise-- between “response to” and “is being non-zero”

Signed and Sealed this
Second Day of November, 2021

Drew Hirshfeld
Performing the Functions and Duties of the
Under Secretary of Commerce for Intellectual Property and
Director of the United States Patent and Trademark Office

AMENDED

AO 120 (Rev. 08/10)

TO: Mail Stop 8 Director of the U.S. Patent and Trademark Office P.O. Box 1450 Alexandria, VA 22313-1450	REPORT ON THE FILING OR DETERMINATION OF AN ACTION REGARDING A PATENT OR TRADEMARK

In Compliance with 35 U.S.C. § 290 and/or 15 U.S.C. § 1116 you are hereby advised that a court action has been filed in the U.S. District Court for the Eastern District of Texas, Marshall Division on the following

☐ Trademarks or ☑ Patents. (☐ the patent action involves 35 U.S.C. § 292.):

DOCKET NO.	DATE FILED	U.S. DISTRICT COURT
2:21-cv-00186-JRG	10/26/2021	for the Eastern District of Texas, Marshall Division

PLAINTIFF	DEFENDANT
JAWBONE INNOVATIONS, LLC	SAMSUNG ELECTRONICS CO. LTD. and SAMSUNG ELECTRONICS AMERICA, INC.

	PATENT OR TRADEMARK NO.	DATE OF PATENT OR TRADEMARK	HOLDER OF PATENT OR TRADEMARK
1	8,019,091	9/13/2011	Jawbone Innovations, LLC
2	8,280,072	10/2/2012	Jawbone Innovations, LLC
3	7,246,058	7/17/2007	Jawbone Innovations, LLC
4	10,779,080	9/15/2020	Jawbone Innovations, LLC
5	11,122,357	9/14/2021	Jawbone Innovations, LLC

In the above—entitled case, the following patent(s)/ trademark(s) have been included:

DATE INCLUDED	INCLUDED BY ☐ Amendment ☐ Answer ☐ Cross Bill ☐ Other Pleading	
PATENT OR TRADEMARK NO.	DATE OF PATENT OR TRADEMARK	HOLDER OF PATENT OR TRADEMARK
1		
2		
3		
4		
5		

In the above—entitled case, the following decision has been rendered or judgement issued:

DECISION/JUDGEMENT

CLERK	(BY) DEPUTY CLERK	DATE

Copy 1—Upon initiation of action, mail this copy to Director *Copy 3—Upon termination of action, mail this copy to Director*
Copy 2—Upon filing document adding patent(s), mail this copy to Director *Copy 4—Case file copy*

AMENDED

AO 120 (Rev. 08/10)

TO: Mail Stop 8 Director of the U.S. Patent and Trademark Office P.O. Box 1450 Alexandria, VA 22313-1450	REPORT ON THE FILING OR DETERMINATION OF AN ACTION REGARDING A PATENT OR TRADEMARK

In Compliance with 35 U.S.C. § 290 and/or 15 U.S.C. § 1116 you are hereby advised that a court action has been filed in the U.S. District Court for the Eastern District of Texas, Marshall Division on the following

☐ Trademarks or ☑ Patents. (☐ the patent action involves 35 U.S.C. § 292.):

DOCKET NO.	DATE FILED	U.S. DISTRICT COURT
2:21-cv-00186-JRG	10/26/2021	for the Eastern District of Texas, Marshall Division

PLAINTIFF	DEFENDANT
JAWBONE INNOVATIONS, LLC	SAMSUNG ELECTRONICS CO. LTD. and SAMSUNG ELECTRONICS AMERICA, INC.

	PATENT OR TRADEMARK NO.	DATE OF PATENT OR TRADEMARK	HOLDER OF PATENT OR TRADEMARK
1	8,467,543	6/18/2013	Jawbone Innovations, LLC
2	8,503,691	8/6/2013	Jawbone Innovations, LLC
3			
4			
5			

In the above—entitled case, the following patent(s)/ trademark(s) have been included:

DATE INCLUDED	INCLUDED BY ☐ Amendment ☐ Answer ☐ Cross Bill ☐ Other Pleading	
PATENT OR TRADEMARK NO.	DATE OF PATENT OR TRADEMARK	HOLDER OF PATENT OR TRADEMARK
1		
2		
3		
4		
5		

In the above—entitled case, the following decision has been rendered or judgement issued:

DECISION/JUDGEMENT

CLERK	(BY) DEPUTY CLERK	DATE

Copy 1—Upon initiation of action, mail this copy to Director *Copy 3—Upon termination of action, mail this copy to Director*
Copy 2—Upon filing document adding patent(s), mail this copy to Director *Copy 4—Case file copy*