Trials@uspto.gov
571-272-7822

Paper 8
Date: October 2, 2023

UNITED STATES PATENT AND TRADEMARK OFFICE

BEFORE THE PATENT TRIAL AND APPEAL BOARD

LIGHTRICKS LTD.,
Petitioner,

v.

PLOTAGRAPH, INC. and SASCHA CONNELLY,
Patent Owner.

IPR2023-00569
Patent 11,301,119 B2

Before PATRICK R. SCANLON, CHARLES J. BOUDREAU, and IFTIKHAR AHMED, *Administrative Patent Judges.*

SCANLON, *Administrative Patent Judge*.

DECISION
Denying Institution of *Inter Partes* Review
35 U.S.C. § 314

I. INTRODUCTION

Lightricks Ltd. ("Petitioner") filed a Petition (Paper 1, "Pet.") requesting an *inter partes* review of claims 1–20 of U.S. Patent No. 11,301,119 B2 (Ex. 1001, "the '119 patent"). Plotagraph, Inc. and Sascha Connelly (collectively, "Patent Owner") filed a Preliminary Response (Paper 7, "Prelim. Resp.").

We have authority to determine whether to institute an *inter partes* review. *See* 35 U.S.C. § 314 (2018); 37 C.F.R. § 42.4(a) (2022). To institute an *inter partes* review, we must determine that the information presented in the Petition shows "a reasonable likelihood that the petitioner would prevail with respect to at least 1 of the claims challenged in the petition." 35 U.S.C. § 314(a). For the reasons set forth below, we determine that Petitioner has not demonstrated a reasonable likelihood that it would prevail with respect to at least one challenged claim. Accordingly, we do not institute an *inter partes* review of any challenged claim on any asserted ground.

II. BACKGROUND

A. Real Parties in Interest

Petitioner identifies itself as the real party in interest. Pet. 1. Patent Owner identifies Plotagraph, Inc. and Sascha Connelly as the real parties in interest. Paper 6, 1.

B. Related Matters

The parties identify the following proceeding as a related matter involving the '119 patent: *Plotagraph, Inc. v. Lightricks Ltd.*, Case No. 4:21-cv-03873 (S.D. Tex.), the dismissal of which is on appeal in *Plotagraph, Inc. v. Lightricks Ltd.*, No. 23-1048 (Fed. Cir.). Pet. 1 (citing Ex. 1021); Paper 6, 2. Patent Owner further identifies the following Board

proceedings involving patents related to the ’119 patent: IPR2023-00152 (challenging U.S. Patent No. 10,558,342), IPR2023-00153 (challenging U.S. Patent No. 10,346,017), IPR2023-00154 (challenging U.S. Patent No. 10,621,469), and IPR2023-00569 (challenging U.S. Patent No. 11,182,641). Paper 6, 2. On June 20, 2023, we denied institution of *inter partes* review in IPR2023-00152. IPR2023-00152, Paper 7. On September 5, 2023, we instituted *inter partes* review in IPR2023-00153 and IPR2023-00154. IPR2023-00153, Paper 9; IPR2023-00154, Paper 9.

C. The ’119 Patent

The ’119 patent, titled “Automated Pixel Shifting within a Digital Image,” issued April 12, 2022, with claims 1–20. Ex. 1001, codes (45), (54), 14:17–17:9. The ’119 patent discloses “systems, methods, and computer-readable media that automate the shifting of pixels within a digital image.” *Id.* at 3:47–49. In one embodiment, a user selects portions of a digital image in which to automate the shifting of pixels and controls the speed, magnitude, direction, and other attributes of the pixel shifting. *Id.* at 3:55–60. The user also applies masks to the digital image to prevent pixels within specific portions of the digital image from moving. *Id.* at 3:60–62. Figures 5A–5D of the ’119 patent are reproduced below.

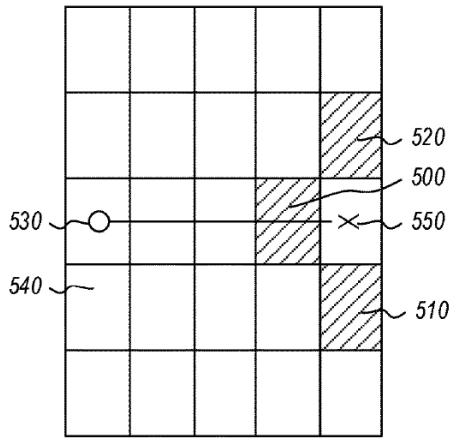

Fig. 5A

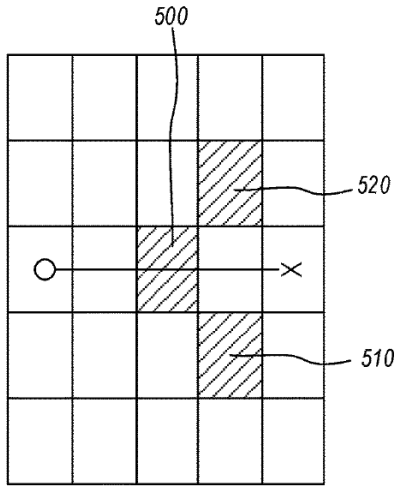

Fig. 5B

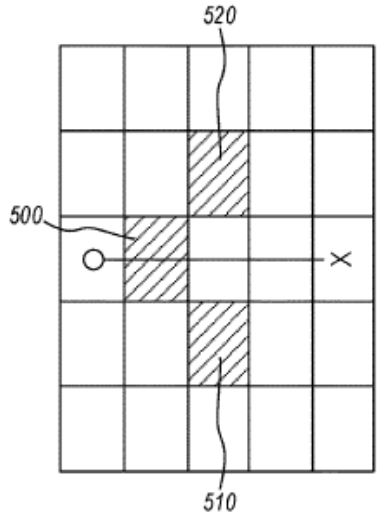

Fig. 5C

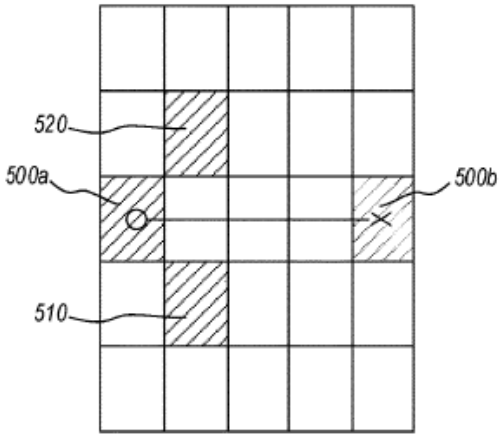

Fig. 5D

Figures 5A–5D illustrate embodiments of individual pixels being shifted. Ex. 1001, 3:34–35. Figure 5A depicts starting point 550, ending point 530, and associated link 540, as well as exemplary pixels 500, 510, and 520 in their original state within the image. *Id.* at 7:36–44.

Figure 5B depicts pixels 500, 510, 520 after being shifted one space left, along the direction of the link, and Figure 5C depicts pixels 500, 510,

520 after being shifted one more space left. *Id.* at 7:47–50, 8:13–14. "In FIG. 5D the pixels 500, 510, 520 are shown at yet another step along the shift, but in this step the pixels 500, 510, 520 are beginning to loop around." *Id.* at 8:14–16.

D. Challenged Claims

As noted above, Petitioner challenges claims 1–20 of the '119 patent. Claims 1, 8, and 15 are independent. Claim 1 is illustrative of the claimed subject matter and is reproduced below:

> 1. A computer system for automating the shifting of pixels within a digital image, comprising:
>
> one or more processors; and
>
> one or more computer-readable media having stored thereon executable instructions that when executed by the one or more processors configure the computer system to perform at least the following:
>
> access, from memory, a digital image file, wherein the digital image file comprises information that corresponds to individual pixels within the digital image;
>
> apply a mask to a particular portion of the digital image, wherein the mask prevents pixels covered by the mask from being shifted;
>
> receive a first starting point through a user interface;
>
> receive a first ending point through the user interface;
>
> create a first link between the first starting point and the first ending point, wherein the first link comprises:
>
> a non-linear pathway extending a first direction between the first starting point and the first ending point; and
>
> a first length extending along the non-linear pathway between the first starting point and the first ending point;

identify a first set of pixels that lie along the first link between the first starting point and the first ending point; and

shift the first set of pixels in the first direction along the first length of the non-linear pathway, wherein shifting the first set of pixels comprises rendering in a loop the first set of pixels being shifted.

Ex. 1001, 14:17–46.

E. Asserted Grounds of Unpatentability

Petitioner contends that the challenged claims are unpatentable based on the following grounds:

Claims Challenged	35 U.S.C. §[1]	Reference(s)/Basis
1–20	102(a)(1)/103	AEM[2]

[1] Because the challenged claims of the '119 patent have an effective filing date after March 16, 2013, patentability is governed by the AIA versions of 35 U.S.C. §§ 102, 103.
[2] Adobe After Effects Help and tutorials, Adobe (2013) (Ex. 1003).

Claims Challenged	35 U.S.C. §[1]	Reference(s)/Basis
1, 2, 4–9, 11–16, 18–20	103	IMU,[3] Okabe[4]
1–3, 8–10, 15–17	103	IMU, Okabe, Li[5]

Pet. 3. Petitioner relies on the Declaration of Philip Greenspun, Ph.D. (Ex. 1002, "the Greenspun Declaration") to support its challenges.

[3] Wayback Machine Capture dated Mar. 27, 2012 of Anthony Thyssen, *Examples of ImageMagick Usage (Version 6)*, ImageMagick (Mar. 15, 2011), http://www.imagemagick.org/Usage/ (retrieved from https://web.archive.org/web/20120327064501/http://www.imagemagick.org/Usage/ (*see* Pet. viii)) (Ex. 1004); WayBack Machine Capture dated Mar. 29, 2012 of Anthony Thyssen, *ImageMagick v6 Examples -- Distorting Images*, ImageMagick (Mar. 21, 2012), http://www.imagemagick.org/Usage/distorts/ (retrieved from https://web.archive.org/web/20120329131929/http://www.imagemagick.org/Usage/distorts/ (*see* Pet. viii)) (Ex. 1005); Wayback Machine Capture dated Sept. 28, 2012 of Anthony Thyssen, *ImageMagick v6 Examples -- Masks*, ImageMagick (Mar. 10, 2011), http://www.imagemagick.org/Usage/masking/ (retrieved from https://web.archive.org/web/20120928070642/http://www.imagemagick.org/Usage/masking/ (*see* Pet. viii)) (Ex. 1006); Wayback Machine Capture dated Mar. 10, 2012 of Anthony Thyssen, *ImageMagick v6 Examples -- Animation Basics*, ImageMagick (Feb. 8, 2011), http://www.imagemagick.org/Usage/anim_basics/ (retrieved from https://web.archive.org/web/20120310193613/http://www.imagemagick.org/Usage/anim_basics/ (*see* Pet. viii)) (Ex. 1007); Wayback Machine Capture dated Apr. 5, 2012 of Anthony Thyssen, *ImageMagick v6 Examples --Usage under Windows*, ImageMagick (Mar. 21, 2012), http://www.imagemagick.org/Usage/windows/ (retrieved from https://web.archive.org/web/20120405151502/http://www.imagemagick.org/Usage/windows/ (*see* Pet. viii–ix)) (Ex. 1008). Petitioner asserts that Exhibits 1004–1008 comprise a single reference, which Petitioner refers to as IMU. Pet. 4 n.3 (citing Ex. 1002 ¶ 48 n.7).

[4] Makoto Okabe et al., Creating Fluid Animation from a Single Image using Video Database, 30 Computer Graphics Forum 7 (2011) (Ex. 1009).

[5] Yin Li et al., Lazy Snapping, 23 ACM Transactions on Graphics 303 (2004) (Ex. 1010).

III. ANALYSIS

A. Level of Ordinary Skill in the Art

In determining whether an invention would have been obvious at the time it was made, 35 U.S.C. § 103 requires us to resolve the level of ordinary skill in the pertinent art at the time of the invention. *Graham v. John Deere Co.*, 383 U.S. 1, 17 (1966). The person of ordinary skill in the art is a hypothetical person who is presumed to have known the relevant art at the time of the invention. *In re GPAC, Inc.*, 57 F.3d 1573, 1579 (Fed. Cir. 1995). Factors that may be considered in determining the level of ordinary skill in the art include, but are not limited to, the types of problems encountered in the art, the sophistication of the technology, and educational level of active workers in the field. *Id.* In a given case, one or more factors may predominate. *Id.*

Petitioner contends that a person having ordinary skill in the art "would have had at least a bachelor's degree in computer science, electrical engineering, or a related field, and at least one 1–2 years of experience in image processing and animation," and "[l]ess education could have been compensated with more experience, and vice versa." Pet. 5–6 (citing Ex. 1002 ¶¶ 27–29). Petitioner adds that one of ordinary skill in the art "would have also been familiar with existing systems for image processing and animation and understood how to implement such systems." *Id.* at 6 (citing Ex. 1002 ¶¶ 27–29). Patent Owner does not address the level of ordinary skill in the art in its Preliminary Response.

Based on our review of the record before us, we determine that Petitioner's stated level of ordinary skill in the art is reasonable because it appears consistent with the evidence of record, including the asserted prior

art. Accordingly, for the purposes of this Decision, we adopt Petitioner's definition.

B. Claim Construction

In *inter partes* reviews, the Board interprets claim language using the district-court-type standard, as described in *Phillips v. AWH Corp.*, 415 F.3d 1303 (Fed. Cir. 2005) (en banc). *See* 37 C.F.R. § 42.100(b). Under that standard, we generally give claim terms their ordinary and customary meaning, as would be understood by a person of ordinary skill in the art at the time of the invention, in light of the language of the claims, the specification, and the prosecution history. *See Phillips*, 415 F.3d at 1313–14. Although extrinsic evidence, when available, may also be useful when construing claim terms under this standard, extrinsic evidence should be considered in the context of the intrinsic evidence. *See id.* at 1317–19.

Petitioner contends that all claim terms should be given their plain and ordinary meaning at this stage of the proceeding. Pet. 8 (citing Ex. 1002 ¶ 46). Patent Owner indicates that it proposes "construction for certain claim language below," but it does not actually identify any claim language for construction, let alone provide any constructions. Prelim. Resp. 16–17.

On the present record, we do not discern a need to construe explicitly any claim language because doing so would have no effect on our analyses below of Petitioner's asserted grounds and will not assist in resolving the present controversy between the parties. *See Realtime Data, LLC v. Iancu*, 912 F.3d 1368, 1375 (Fed. Cir. 2019) ("The Board is required to construe 'only those terms that . . . are in controversy, and only to the extent necessary to resolve the controversy.'") (quoting *Vivid Techs., Inc. v. Am. Sci. & Eng'g, Inc.*, 200 F.3d 795, 803 (Fed. Cir. 1999)).

C. Asserted Anticipation or Obviousness Based on AEM

Petitioner asserts that claims 1–20 are anticipated by AEM or, alternatively, are rendered obvious by AEM. Pet. 8–49. Patent Owner provides arguments addressing this asserted ground of unpatentability. Prelim. Resp. 18–27.

1. AEM

AEM is a user manual for the Adobe After Effects CS6 software program ("AECS6"). Pet. 3 (citing Ex. 1003, 3; Ex. 1002 ¶ 43). AEM describes several features of AECS6, including animation and keyframes (Ex. 1003, 177–78), animation tools including motion paths (*id.* at 187–88), animating with Puppet tools (*id.* at 218–23), compositing (*id.* at 315–16), and using alpha channels, masks, and mattes (*id.* at 317–24).

2. Independent Claim 1

Petitioner provides analysis purporting to show where each limitation recited in independent claim 1 is either disclosed by AEM or would have been obvious in view of AEM. Pet. 16–34. Petitioner's analysis relies on AECS6 and several screenshots of AECS6 created by Dr. Greenspun as establishing the background knowledge possessed by a person of ordinary skill in the art. *See* Pet. 17 n.5 (quoting *Qualcomm Inc. v. Apple Inc.*, 24 F.4th 1367, 1376 (Fed. Cir. 2022)). For example, we reproduce one of Dr. Greenspun's annotated screenshots below.

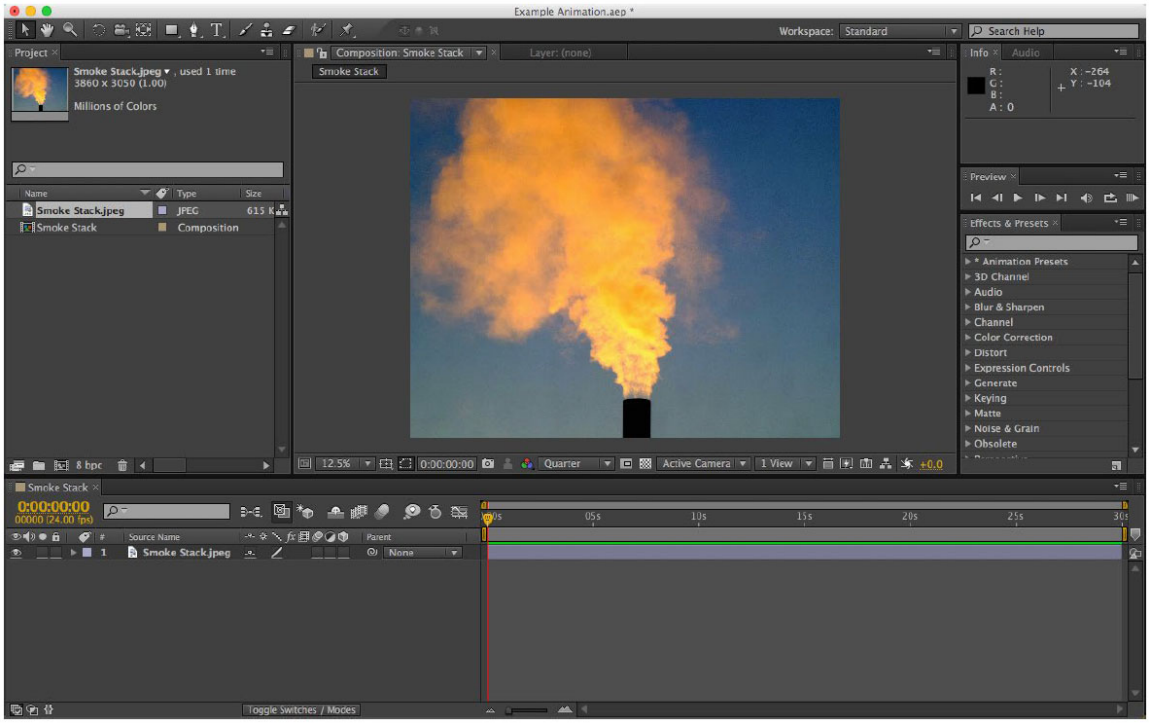

*Id.*at 18 (citing Ex. 1002 ¶ 93). This screenshot "shows an exemplary composition where a JPEG image of a smokestack has been imported as a layer." *Id.* at 17.

Regarding the limitation "identify a first set of pixels that lie along the first link between the first starting point and the first ending point," Petitioner asserts that AEM discloses selecting certain pixels of a layer to be transparent or nontransparent by applying either a mask or a matte. *Id.* at 27 (citing Ex. 1003, 315, 318; Ex. 1002 ¶ 105). Thus, according to Petitioner, AEM discloses that "AECS6 allows a user to apply either a mask or matte to select any or all pixels of the layer to be nontransparent and thus included in the layer's mesh to be moved and animated, including pixels that lie along a length of the Deform pin's [non-linear] motion path."[6] *Id.* (citing Ex. 1003, 194–95, 218–19, 315; Ex. 1001, 7:3–4; Ex. 1002 ¶ 106). Petitioner also

[6] As discussed in more detail below, AEM discloses that a user may use a "Deform pin" to animate an image. Ex. 1003, 218.

asserts that "AECS6 automatically creates the mesh from the layer's nontransparent pixels." *Id.* (citing Ex. 1003, 218–19; Ex. 1001, 7:3–4; Ex. 1002 ¶ 106).

As an alternative to the assertion that AEM anticipates this limitation, Petitioner argues that one of ordinary skill in the art "would have found obvious selecting and making nontransparent, using a mask or matte, those pixels extending along the Deform pin's motion path, because such pixels would in common instances be pixels that the user desires to include in the mesh to be moved and animated." *Id.* (citing Ex. 1002 ¶ 107).

Next, regarding the limitation "shift the first set of pixels in the first direction along the first length of the non-linear pathway," Petitioner asserts that "when a non-linear motion path for the Deform pin is also created, AECS6 animates the corresponding change to the shape of the layer's mesh (which includes the claimed 'first set of pixels,' *see* Section VI.A.2.g), and thus the movement of the layer's nontransparent pixels accommodating the Deform pin repositioning." *Id.* at 30–31 (citing Ex. 1003, 194–95, 218–19; Ex. 1001, 8:48–51; Pet. 24–26; Ex. 1002 ¶ 109).

Patent Owner argues that AEM does not teach or suggest selecting a set of pixels that extend along a non-linear pathway. Prelim. Resp. 19–22. We agree that AEM does not disclose selecting a first set of pixels as claimed for the following reasons.

First, the disclosure of AEM that Petitioner relies on for teaching selecting certain pixels to be transparent or nontransparent pertains to "compositing," i.e., creating a composite image from multiple images. Ex. 1003, 315–16. AEM states specifically: "To create a composite from multiple images, you can make parts of one or more of the images transparent so that other images can show through." *Id.* at 315. Thus, each

pixel in the composite image is either transparent or nontransparent such that *every* pixel is "selected" under Petitioner's usage of the term "selecting." The possibility that some of these pixels, in theory, *could* extend along a non-linear motion path of a Deform pin is mere happenstance—we are not directed to any disclosure in AEM of actually selecting a set of pixels (either transparent or nontransparent) that extend along a non-linear motion path. *See In re Facebook, Inc.*, 743 F. App'x. 998, 1001–02 (Fed Cir. 2018) (deciding that an example in a prior art reference showing that it is *possible* for image elements to be contiguous is not sufficient to teach a claim limitation that requires contiguity). We are not persuaded on the record before us that AEM's disclosure of designating pixels as transparent or nontransparent satisfies selecting a first set of pixels extending along a non-linear pathway.

Second, Petitioner's argument relies on AEM's teaching that "AECS6 allows a user . . . to select any or all pixels of the layer to be nontransparent and thus included in the layer's mesh to be moved and animated." Pet. 27. We disagree, however, that AEM discloses selecting pixels to be nontransparent *and* including these pixels in a mesh to be moved and animated. That AECS6 arguably allows selected nontransparent pixels to be included in a mesh is not sufficient to establish that AEM discloses doing so. Petitioner contends that AECS6 and the screenshots of AECS6 created by Dr. Greenspun establish the background knowledge possessed by a person of ordinary skill in the art but does not explain adequately why AECS6's alleged capability would cause one of ordinary skill in the art to understand AEM to teach selecting pixels of a layer to be nontransparent and including the selected pixels in the layer's mesh. *See* Pet. 17 n.5 (quoting *Qualcomm*,

24 F.4th at 1376). Again, any pixels selected to be nontransparent being included in a mesh is mere happenstance.

Third, Petitioner's contention that it would have been obvious to select and make nontransparent the pixels that lie along the Deform pin's motion path "because such pixels would in common instances be pixels that the user desires to include in the mesh to be moved and animated" is unpersuasive circular reasoning. *See* Pet. 27 (citing Ex. 1002 ¶ 107). That is, as Petitioner argues,

> to move and animate the smoke rising from the smokestack of the still image depicted in [Dr. Greenspun's AECS6 screenshots], a [person of ordinary skill in the art] would have recognized to ensure the smoke's pixels are included in the mesh to be moved by selecting and making nontransparent all pixels of the smoke.

Id. at 28. Thus, a user's desire to include pixels extending along a length of the Deform pin's motion path in the mesh to be moved and animated would not have caused one of ordinary skill in the art to "select" these pixels because all of the smoke pixels would have already been included in the mesh. Moreover, the characterization of what a user desires is a conclusory statement that neither the Petition nor Dr. Greenspun supports sufficiently with objective evidence or analysis. *See* Pet. 27; Ex. 1002 ¶ 107.

Moreover, and most significantly, even if Petitioner were correct and AEM taught or suggested selecting a first set of pixels as claimed, we disagree with Petitioner's contention that AEM discloses "shift[ing] the first set of pixels in the first direction along the first length of the non-linear pathway." As noted above, Petitioner's only argument for this limitation is "when a non-linear motion path for the Deform pin is also created, AECS6 animates the corresponding change to the shape of the layer's mesh (which

includes the claimed 'first set of pixels,' *see* Section VI.A.2.g), and thus the movement of the layer's nontransparent pixels accommodating the Deform pin repositioning." Pet. 30–31 (citing Ex. 1003, 194–95, 218–19; Ex. 1001, 8:48–51; Pet. 24–26; Ex. 1002 ¶ 109). This argument, however, does not establish that a first set of pixels is shifted *along the non-linear pathway* as claimed. Rather, AEM discloses creating a mesh by placing Deform pins wherein the mesh changes shape in response to moving one or more of the Deform pins. Ex. 1003, 218. We reproduce below two images from AEM that illustrate this feature.

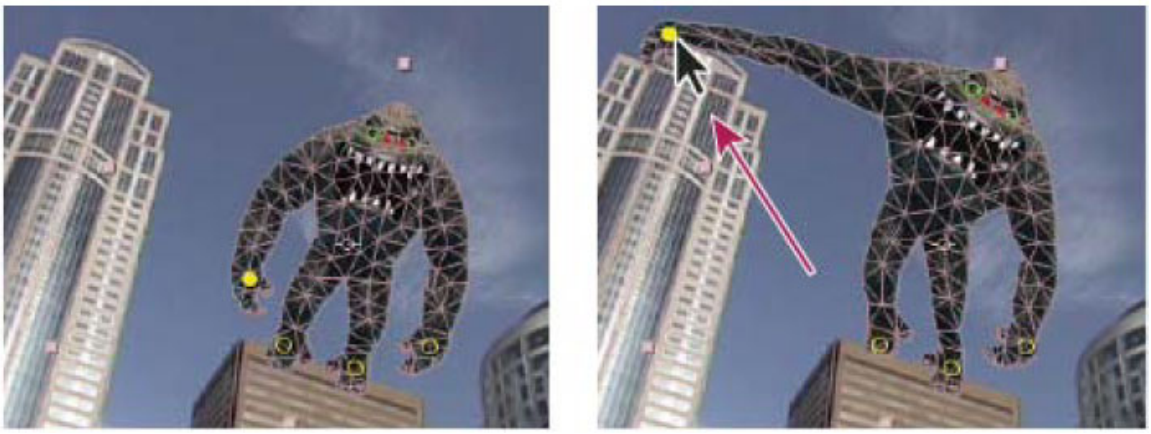

Id. The image on the left depicts a gorilla-type creature standing on top of a building with Deform pins placed in the creature's hands and feet so as to create a mesh of triangles within the outline of the creature. *Id.* The image on the right depicts how the mesh (and thus the outline of the creature) changes shape as result of the Deform pin in the creature's right hand being dragged upward and to the left from its original location. *Id.* As such, at least some of the pixels of the mesh move in response to the Deform pin being moved, but these pixels do not necessarily move along the pin's motion path.

Furthermore, we do not find Petitioner's reliance on the sample AECS6 screenshots from the Greenspun Declaration persuasive. Although

Petitioner contends that these screenshots establish the background knowledge, we do not view them as overcoming the deficiency of AEM's disclosure with respect to shifting a set of pixels along a motion path. *See* Pet. 17 n.5 (quoting *Qualcomm*, 24 F.4th at 1376). At best, the sample screenshots suggest that AECS6 *could* be used to shift a set of selected pixels along a pathway, but do not demonstrate that AEM teaches or suggests as much. Moreover, neither the Petition nor Dr. Greenspun adequately explains how any of the sample screenshots demonstrate that any pixel other than the pixel corresponding to the Deform pin moves along the motion path. *See* Pet. 25–26; Ex. 1002 ¶¶ 63–87, 101. Accordingly, we are not persuaded that AEM teaches or suggests "shift[ing] the first set of pixels in the first direction along the first length of the non-linear pathway."

Turning now to another aspect of the shifting limitation, we agree with Patent Owner that AEM does not teach or suggest shifting the first set of pixels by rendering them in a loop. *See* Prelim. Resp. 24–27. For this limitation, Petitioner contends that "AEM teaches applying a 'loopOut()' expression to the Deform pin, which, by default, causes 'all keyframes [to] loop,'" and "by applying a default 'loopOut()' expression to a Deform pin, the Deform pin's position will be reset to the starting keyframe upon reaching the ending keyframe during keyframe interpolation, and the interpolation will be looped and repeated then and thereafter until otherwise specified by the user." Pet. 31 (citing Ex. 1003, 219, 562; Ex. 1002 ¶ 110). Petitioner also relies on a series of the sample AECS6 screenshots from the Greenspun Declaration as "showing the result of applying a 'loopOut()' expression." *Id.* at 31–35 (citing Ex. 1002 ¶ 111, Attachment B).

AEM discloses that the loopOut expression "[l]oops a segment of time that is measured from the last keyframe on the layer back toward the In point

of the layer" and that "[t]he loop plays until the Out point of the layer." Ex. 1003, 562. Neither the Petition nor Dr. Greenspun, however, explains sufficiently how this disclosure teaches shifting a first set of pixels along a non-linear pathway by rendering them in a loop. *See* Pet. 31–35; Ex. 1002 ¶¶ 110–111. Specifically, it is not clear how looping "a segment of time" equates to shifting a set of pixels in a loop. Nor is there a sufficient explanation of the disclosed In point and Out point of the layer. Also, we are not directed to any disclosure in AEM that suggests applying the loopOut expression to a Deform pin.

Moreover, neither the Petition nor Dr. Greenspun adequately explains the significance of the cited AECS6 screenshots. *See* Pet. 31–35; Ex. 1002 ¶¶ 110–111. Although the last of these screenshots appears to be substantially identical to the first screenshot, neither the Petition nor Dr. Greenspun actually asserts that this return represents rendering the shifted pixels in a loop. *Id.* In any event, based on the record before us, we agree with Patent Owner that "[m]erely returning the Deform pin back to its starting point is not shifting it 'in a loop.'" *See* Prelim. Resp. 25.

For the above reasons, we determine Petitioner has not met its burden to show a reasonable likelihood it would prevail with respect to the contention that claim 1 is unpatentable over AEM.

3. Independent Claims 8 and 15

Independent claim 8 recites "[a] computer-implemented method" comprising a number of steps including "identifying a first set of pixels that lie along the first link between the first starting point and the first ending point" and "shifting the first set of pixels in the first direction along the first length of the non-linear pathway, wherein shifting the first set of pixels comprises rendering in a loop the first set of pixels being shifted." Ex. 1001,

15:15–43. Similarly, independent claim 15 recites "[a] computer-readable media" having "executable instructions that, when executed at a processor, cause a computer system to perform a method" that includes "identifying a first set of pixels that lie along the first link between the first starting point and the first ending point," and "shifting the first set of pixels in the first direction along the first length of the non-linear pathway, wherein shifting the first set of pixels comprises rendering in a loop the first set of pixels being shifted." *Id.* at 16:14–44.

Petitioner largely relies on the same analysis made in connection with the claim 1 limitations pertaining to identifying and shifting a first set of pixels for showing where the corresponding limitations of independent claims 8 and 15 identified above are taught or suggested by AEM. Pet. 46, 48–49. Thus, Petitioner's challenge to claims 8 and 15 is based on the same deficient assertions as to AEM as discussed above in the analysis of the challenge to independent claim 1. For these same reasons, we find that Petitioner has not met its burden to show a reasonable likelihood that claims 8 and 15 are unpatentable over AEM.

4. Dependent Claims 2–7, 9–14, and 16–20

Claims 2–7 depend from claim 1 and, thus, contain all the limitations of claim 1; claims 9–14 depend from claim 8 and, thus, contain all the limitations of claim 8; and claims 16–20 depend from claim 15 and, thus, contain all the limitations of claim 15. Petitioner's challenges to these dependent claims do not overcome the deficiencies discussed above with respect to independent claims 1, 8, and 15. *See* Pet. 35–45, 47, 49. Accordingly, for the same reasons discussed above in connection with claims 1, 7, and 15, we find Petitioner has not met its burden to show a

reasonable likelihood that claims 2–6, 8–14, and 16–20 are unpatentable over AEM.

D. Asserted Obviousness Based on IMU and Okabe

Petitioner asserts that claims 1, 2, 4–9, 11–16, and 18–20 are unpatentable based on IMU and Okabe. Pet. 49–75. Patent Owner provides arguments addressing this asserted ground of unpatentability. Prelim. Resp. 18–27.

1. IMU

IMU is a collection of Wayback Machine captures of the ImageMagick.com website pertaining to the ImageMagick Version 6 ("IMV6") opensource image processing software. Pet. 4 (citing Ex. 1004, 1; Ex. 1002 ¶ 44). According to Petitioner, "[t]he section's homepage (IMU-Home [Ex. 1004]) contains links to different subpages explaining how to use IMV6's various effects and capabilities, including "Distorting Images" (IMU-Distorting [Ex. 1005]), "Masking and Background Removal" (IMU-Masking [Ex. 1006]), "Animation Basics" (IMU-Animating [Ex. 1007]), and "Usage under Windows" (IMU-Windows [Ex. 1008]).[7] *Id.* (citing Ex. 1004, 1–2; Ex. 1002 ¶ 44).

IMU describes features and capabilities of IMV6, including Scale-Rotate-Translate ("SRT") distortion (Ex. 1005, 16–18) and Shepard's distortion (*id.* at 59–62). IMU explains that Shepard's method "uses the movement of the given control points to distort the image in terms of 'local' effects." Ex. 1005, 59. IMU discloses an example of applying the distortion to stretch an image, as shown in the figure reproduced below.

[7] According to Petitioner, these five exhibits comprise a single reference. Pet. 4 n.3 (citing Ex. 1002 ¶ 48 n.7). Patent Owner does not challenge this assertion in its Preliminary Response.

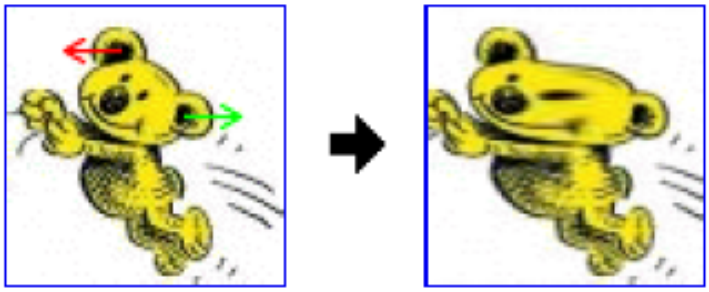

Id. The above figure includes two cartoon-like images of a koala, where the first image includes a control point located at each of the koala's ears, and the second depicts the koala's head as if stretched by pulling the ears apart from each other. IMU explains, with reference to the figure, "the parts of the image between the two control points were stretched out because of the control point movement," but "all the other parts of the image w[ere] left pretty much intact." *Id.* IMU states that the IMV6 software "is designed for batch processing of images," and "is not a [graphical user interface ("GUI")] image editor." Ex. 1004, 2.

2. Okabe

Okabe is a technical article describing a method and system for synthesizing fluid animation in a single image using a fluid video database. Ex. 1009, 1. Okabe's system consists of three components:

> 1) construction of a video database of fluids . . . , where each video example is cut into small pieces, 2) a best-match search for an appropriate video example piece and assignment of this to a part of the target image, and 3) synthesis of the final animation through seamless integration of all the assigned pieces and adjustment of the overall appearance.

Id. at 3. Figure 1 of Okabe is reproduced below.

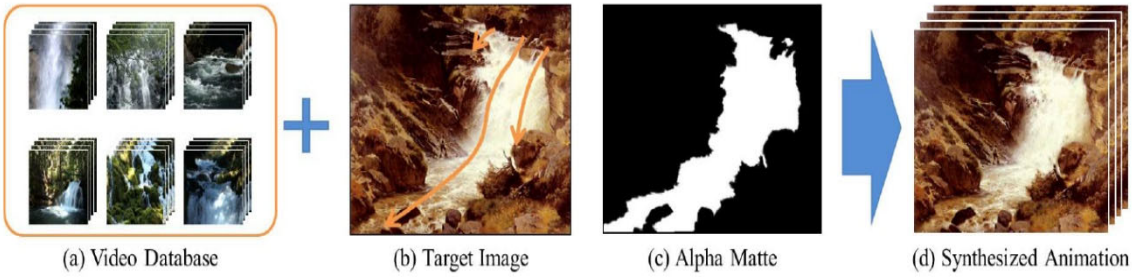

Okabe explains that as shown in Figure 1,

> [Okabe] employs a database of video examples of fluids (a). The user specifies a target image (b) with a few optional suggestions about fluid motion, e.g., sketches of flow direction, shown as orange arrows. The user also provides an alpha matte of the region of interest (c). The system synthesizes an animation (d).

Id. at 2; *see also id.* at 6, Fig. 8 (discussing user-specified motion field). Okabe also discloses that "several methods are available to synthesize an infinitely flowing fluid animation," such that the synthesized animation can permit infinite repetition. *Id.* at 8.

3. Independent Claim 1

Petitioner contends that one of ordinary skill in the art "would have been motivated to combine IMV6's animation capabilities described in IMU with the simple and graphical user commands for creating an animation taught by Okabe," and articulates reasons to combine IMU and Okabe in the manner proposed. Pet. 55–59. In particular, Petitioner argues that IMU's laborious, text-based process for creating animation would have led one of ordinary skill in the art to use the simpler and more intuitive graphical user commands taught by Okabe. *Id.* at 56–58 (citing Ex. 1004, 2; Ex. 1008, 1; Ex. 1009, 1–3, 7, 8; Ex. 1003¶¶ 164–167).

Petitioner then contends that the proposed combination of IMU and Okabe discloses the limitations of independent claim 1. *Id.* at 59–67. For instance, Petitioner argues that IMU discloses animating an image using

distortion effects, such as Shepard's distortion, "by placing and incrementally moving control points frame-by-frame such that each control point moves across the animation—potentially following the user's desired direction and speed." *Id.* at 64 (citing Ex. 1005, 17–20, 59; Ex. 1007, 7–8; Ex. 1002 ¶ 179). According to Petitioner, "[t]he pathway of animation may be non-linear as specified by coordinates input by the user." *Id.* (citing Ex. 1005, 17–18; Ex. 1002 ¶ 179). Petitioner also argues that, in the IMU-Okabe combination, the user specifies the direction and speed of a Shepard's distortion control point by drawing a non-linear stroke on the image as taught by Okabe, which satisfies the claimed "create a first link" that comprises "a non-linear pathway extending a first direction" and "a first length." *Id.* (citing Ex. 1009, 2–3, 7; Ex. 1002 ¶ 180). To support this contention, Petitioner provides an annotated version of Okabe's Figure 1, which we reproduce below.

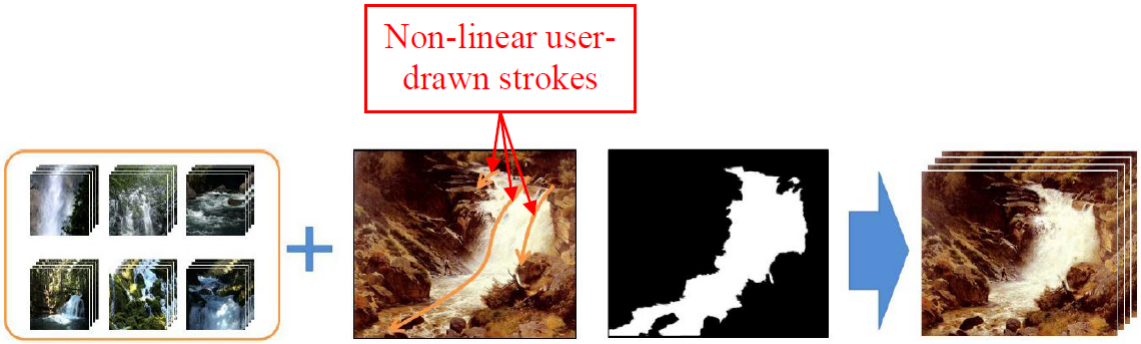

Id. at 65 (citing Ex. 1009, 2, 6, Figs. 1, 8-a; Ex. 1002 ¶ 180). This annotated version of Figure 1 depicts, from left to right, a video database, a target image having three orange arrows, an alpha matte, and a synthesized animation, with Petitioner's annotation identifying the three orange arrows in the target image as "Non-linear user-drawn strokes." *Id.*; Ex. 1009, 2.

Regarding the limitation "identify a first set of pixels that lie along the first link between the first starting point and the first ending point,"

Petitioner asserts that, because the IMU-Okabe combination allows a user to apply a matte specifying a region of interest in an image the user desires to animate and a stroke specifying the direction and speed of a Shepard's distortion control point across the animation, "a user would have been allowed to select any or all pixels of the image to be included in this region of interest, including pixels that lie along the aforementioned stroke between the stroke's starting point and ending point." Pet. 65 (citing Ex. 1009, 1, 3, 7; Ex. 1002 ¶ 182).

We now turn to the limitation "shift the first set of pixels in the first direction along the first length of the non-linear pathway." Petitioner first argues that, "[w]ith respect to 'shift the first set of pixels,'" the '119 patent states that the claimed shifting can be performed using "a warping function, such as Shepard's distortion," and that IMU explicitly teaches performing "Shepard's Distortion" and, therefore, the claimed pixel shifting. *Id.* at 66 (citing Ex. 1001, 8:46–48; Ex. 1002 ¶ 183; Ex. 1005, 17–20, 59; Ex. 1007, 7–8).

To the extent Petitioner is contending that IMU teaches shifting the first set of pixels along the non-linear pathway, Petitioner has not sufficiently shown that it does. The '119 patent discloses that "software architecture 200 uses alpha blending when shifting the pixels from the starting point to the ending point," and "[a]dditionally, in at least one embodiment, the software architecture uses a warping function, such as Shepard's distortion." Ex. 1001, 8:42–48. This passage is the only reference to Shepard's distortion in the '119 patent and merely indicates that Shepard's distortion may be, but is not necessarily, used in connection with shifting the pixels. The passage does not suggest that any prior art disclosure of Shepard's distortion would teach shifting a first set of pixels

along a non-linear pathway. More importantly, we are not persuaded that IMU's Shepard's distortion shifts a set of pixels along a non-linear pathway.

Petitioner argues that, "IMV6's user shifts pixels as claimed by using Shepard's Distortion to place and incrementally move a 'control point' on an image in the user's specified direction and speed." Pet. 66 (citing Ex. 1005, 17–20, 59; Ex. 1007, 7–8; Ex. 1002 ¶ 183). According to Petitioner, "[t]he direction may be non-linear as specified by coordinates input by the user." *Id.* (citing Ex. 1005, 17–18; Pet. 58–59; Ex. 1002 ¶ 183). Neither the Petition nor Dr. Greenspun, however, explains adequately how the specified direction of a Shepard's distortion control point can be made non-linear. *See id.*; Ex. 1002 ¶ 183. First, we note that the portion of IMU cited in support of its assertion pertains to SRT distortion rather than Shepard's distortion. Ex. 1005, 17–18. Indeed, in its summary of IMU, Petitioner indicates that the cited portion pertains to SRT distortion. Pet. 51 (citing Ex. 1005, 17–18; Ex. 1002 ¶ 154). Second, even if one of ordinary skill in the art would have considered applying aspects of IMU's SRT distortion technique to its Shepard's distortion technique (which Petitioner does not assert explicitly), we do not find Petitioner's arguments based on IMU's SRT distortion technique persuasive. Specifically, Petitioner argues that

> IMU provides an example command that applies IMV6's "SRT Distortion" effect—another "[d]istortion" effect that, like Shepard's Distortion, uses "control points"—to an image of a "stylized space ship" by moving a placed SRT Distortion control point in seven increments to create frames that, when played sequentially, animate the space ship launching along a path through the sky.

Id. (citing Ex. 1005, 17–18; Ex. 1002 ¶ 154). Petitioner provides a series of frames depicting this example, which we reproduce below.

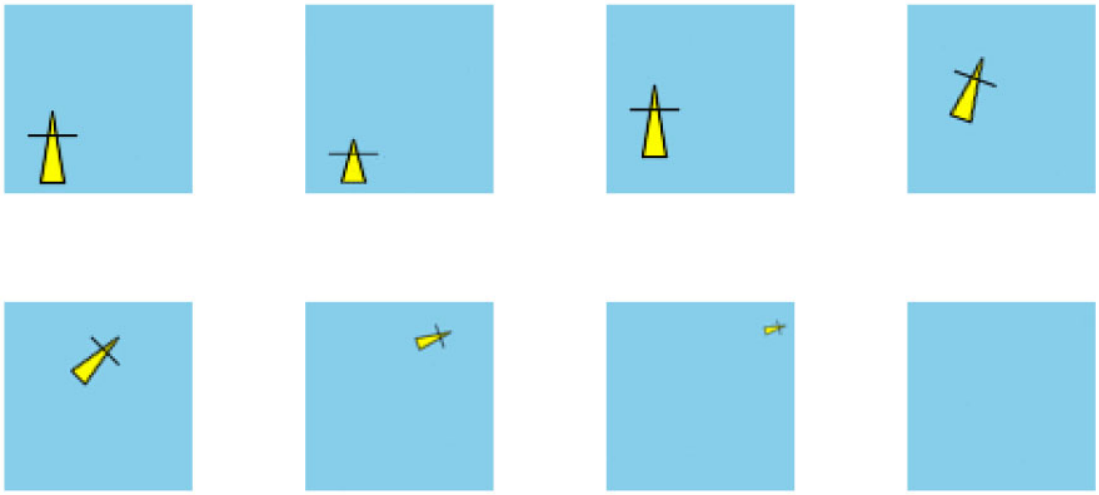

Pet. 52 (citing Ex. 1005, 17–18; Ex. 1002 ¶ 154).[8] This series of frames depicts a "stylized space ship" in different positions and orientations that provide an example of using SRT distortion to animate a static image. Ex. 1005, 17–18.

As noted above, Petitioner contends that, when played sequentially, these frames "animate the space ship launching *along a path* through the sky." Pet. 51 (citing Ex. 1005, 17–18; Ex. 1002 ¶ 154) (emphasis added). Possibly referring to the space ship's path, Petitioner also contends that "[t]he pathway of animation may be non-linear as specified by coordinates input by the user." *Id.* at 64 (citing Ex. 1005, 17–18; Pet. 58–59; Ex. 1002 ¶ 179). Even if the space ship in this example "travels" along a non-linear pathway, neither the Petition nor Dr. Greenspun shows sufficiently how this example discloses identifying a first set of pixels that lie along the non-linear pathway and shifting the first set of pixels along the non-linear pathway.

[8] Not all of these frames are shown in IMU, but Petitioner asserts that "[t]he full animation can be viewed at IMU-Distorting's archived URL: https://web.archive.org/web/20120329131929/http://www.imagemagick.org/Usage /distorts/." Pet. 52 n.7.

On the other hand, to the extent Petitioner is contending that IMU teaches merely shifting a first set of pixels in general, and not necessarily along a non-linear pathway, we agree that IMU discloses using Shepard's distortion to move or shift multiple pixels. *See* Ex. 1005, 59. However, claim 1 requires that the first set of pixels lies along the first link that comprises the non-linear pathway. We are not persuaded that IMU discloses using Shepard's distortion to shift a set of pixels that lie along a non-linear pathway for the reasons discussed above.

Next, Petitioner argues that the IMU-Okabe combination allows a user to specify a Shepard's distortion control point's direction and speed by drawing a non-linear stroke as taught by Okabe such that the combination automatically generates animation frames by shifting the selected pixels along the stroke's non-linear pathway. Pet. 67 (citing Ex. 1009, 1–3, 7; Ex. 1002 ¶ 184; Pet. 58–59). This argument is also not persuasive. Okabe discloses that a user can specify a desired motion field using "sparsely drawn strokes" that generate an orientation map. Ex. 1009, 6, Fig. 8; *see also id.* at Fig. 1 (depicting "sketches of flow direction, shown as orange arrows"), 7 ("[D]esignating the orientation map requires a sparse set of user-drawn strokes."). The caption for Figure 8 states that the user-drawn strokes (shown as green arrows in Figure 8(a)) indicate that the user wants the fire shown in the image to move from bottom to top. *Id.* at 6. Similarly, the caption for Figure 1 states that the orange arrows are "*optional suggestions about fluid motion*." *Id.* at 2. As such, Okabe's strokes merely provide a general indication of the desired direction of movement—there is no indication that they define pathways that a set of identified pixels are shifted along. Neither the Petition nor Dr. Greenspun shows sufficiently how Petitioner's proposed combination teaches identifying a first set of pixels

that lie along the non-linear pathway and shifting the first set of pixels along the non-linear pathway, as required by claim 1.

For the above reasons, we determine Petitioner has not met its burden to show a reasonable likelihood it would prevail with respect to the contention that claim 1 is unpatentable over IMU and Okabe.

4. Independent Claims 8 and 15

As discussed above (*see supra* § III.C.3), independent claims 8 and 15 both recite limitations that are the same as or similar to the claim 1 limitation "shift the first set of pixels along the non-linear pathway." Petitioner relies on the same analysis made in connection with this claim 1 limitation for showing where the corresponding limitations of independent claims 8 and 15 are taught or suggested by the combination of IMU and Okabe. Pet. 73, 75. Thus, Petitioner's challenge to claims 8 and 15 is based on the same deficient assertions as to IMU and Okabe as discussed above in the analysis of the challenge to independent claim 1. For these same reasons, we find that Petitioner has not met its burden to show a reasonable likelihood that claims 8 and 15 are unpatentable over IMU and Okabe.

5. Dependent Claims 2, 4–7, 9, 11–14, 16, and 18–20

Claims 2 and 4–7 depend from claim 1 and, thus, contain all the limitations of claim 1; claims 9 and 11–14 depend from claim 8 and, thus, contain all the limitations of claim 8; and claims 16 and 18–20 depend from claim 15 and, thus, contain all the limitations of claim 15. Petitioner's challenges to these dependent claims do not overcome the deficiencies discussed above with respect to independent claims 1, 8, and 15. *See* Pet. 67–75. Accordingly, for the same reasons discussed above in connection with claims 1, 8, and 15, we find Petitioner has not met its

burden to show a reasonable likelihood that claims 2, 4–7, 9, 11–14, 16, and 18–20 are unpatentable over IMU and Okabe.

E. Asserted Obviousness Based on IMU, Okabe, and Li

Petitioner asserts that claims 1–3, 8–10, and 15–17 are unpatentable based on IMU, Okabe, and Li. Pet. 76–86.

1. Li

Li is a technical article titled "Lazy Snapping" and describes "an interactive image cutout tool." Ex. 1010, 1. Li explains that image cutout is "the technique of removing an object in a picture or photograph from its background" by "specifying which parts of the image are 'foreground' (the part you want to cut out) and which belong to the background." *Id.* Figure 1 of Li, reproduced below, illustrates how its tool may be used.

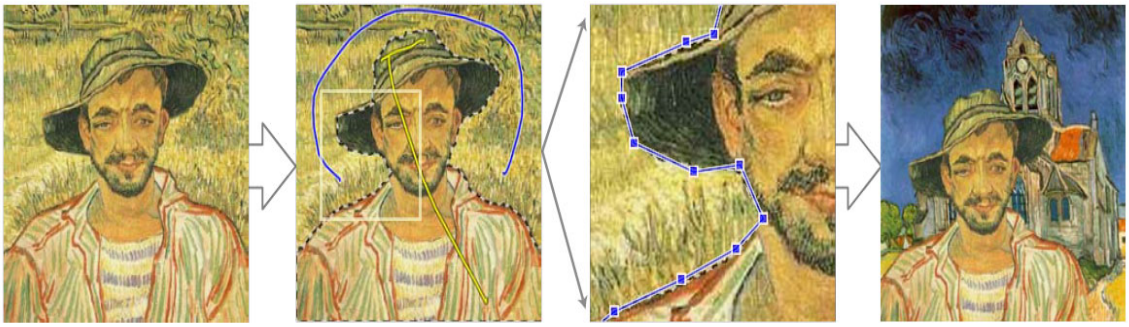

Id. at 1. Figure 1 illustrates that

> Lazy Snapping is an interactive image cutout system, consisting of two steps: a quick object marking step and a simple boundary editing step. In [object marking step (b)], only 2 (yellow) lines are drawn to indicate the foreground, and another (blue) line to indicate the background. All these lines are far away from the true object boundary. In [boundary editing step (c)], an accurate boundary can be obtained by simply clicking and dragging a few polygon vertices in the zoomed-in view.

Id. at 1–2. Li discloses that "[t]o specify an object, a user marks a few lines on the image by dragging the mouse cursor while holding a button," and that

its user interface "does not require very precise user inputs." *Id.* at 2. "The segmentation process is triggered once the user releases the mouse button after each marking line is drawn." *Id.* "The user then inspects the segmentation result on screen and decides if more lines need to be marked." *Id.*

2. Discussion

Petitioner argues that it would have been obvious to combine the IMU-Okabe combination with Li's "Lazy Snapping" tool. Pet. 78–81. Petitioner, however, does not rely on Li as teaching or suggesting the limitations of claims 1, 8, and 15 that pertain to identifying and shifting the first set of pixels. Instead, Petitioner relies on the same analyses made in connection with these limitations in the IMU-Okabe combination. *Id.* at 82, 84–86. Accordingly, Petitioner's proposed IMU-Okabe-Li combination suffers from the same deficiencies as the IMU-Okabe combination discussed above with respect to independent claims 1, 8, and 15. Moreover, Petitioner's arguments regarding dependent claims 2, 3, 9, 10, 16, and 17 do not overcome these deficiencies. *See* Pet. 82–86.

Therefore, for the same reasons discussed above, we determine that the information presented in the Petition fails to establish a reasonable likelihood that Petitioner would prevail in showing that any of claims 1–3, 8–10, and 15–17 would have been obvious over IMU, Okabe, and Li.

IV. CONCLUSION

For the foregoing reasons, we do not institute *inter partes* review.

V. ORDER

In consideration of the foregoing, it is hereby:

ORDERED that the Petition is *denied* as to all challenged claims of the '119 patent; and

FURTHER ORDERED that no *inter partes* review is instituted.

FOR PETITIONER:

Robert Greeson
R. Ross Viguet
Lu Ling
NORTON ROSE FULBRIGHT US LLP
robert.greeson@nortonrosefulbright.com
ross.viguet@nortonrosefulbright.com
lu.ling@nortonrosefulbright.com

FOR PATENT OWNER:

Shawn Hunter
David Walker
SCHNEIDER, WALLACE, COTTRELL, KONECKY LLP
shunter@schneiderwallace.com
dwalker@schneiderwallace.com

Raymond R. Ferrera
ADAMS AND REESE LLP
ray.ferrera@arlaw.com