US008184603B2

(12) **United States Patent**
Waylett et al.

(10) **Patent No.: US 8,184,603 B2**
(45) **Date of Patent: May 22, 2012**

(54) **COMMUNICATION SYSTEM HAVING A COMMUNITY WIRELESS LOCAL AREA NETWORK FOR VOICE AND HIGH SPEED DATA COMMUNICATION**

(75) Inventors: **Nicholas S. Waylett**, Lincoln City, OR (US); **Chris P. McIntosh**, San Francisco, CA (US)

(73) Assignee: **LGC Wireless, LLC**, San Jose, CA (US)

(*) Notice: Subject to any disclaimer, the term of this patent is extended or adjusted under 35 U.S.C. 154(b) by 1965 days.

(21) Appl. No.: **10/893,611**

(22) Filed: **Jul. 15, 2004**

(65) **Prior Publication Data**

US 2005/0088999 A1 Apr. 28, 2005

Related U.S. Application Data

(63) Continuation of application No. 10/655,152, filed on Sep. 3, 2003, now abandoned, which is a continuation of application No. 10/342,591, filed on Jan. 14, 2003, now abandoned.

(60) Provisional application No. 60/353,815, filed on Jan. 31, 2002.

(51) **Int. Cl.**
H04W 4/00 (2009.01)
H04B 7/14 (2006.01)

(52) **U.S. Cl.** **370/338**; 455/15; 455/20

(58) **Field of Classification Search** 370/328, 370/352, 340, 338, 401, 465, 466; 455/552, 455/456, 522, 11.1, 15, 16, 41.2, 420
See application file for complete search history.

(56) **References Cited**

U.S. PATENT DOCUMENTS

4,726,644	A	2/1988	Mathis
5,603,080	A	2/1997	Kallander et al.
5,621,786	A	4/1997	Fischer et al.
5,627,879	A	5/1997	Russell et al.
5,642,405	A	6/1997	Fischer et al.
5,644,622	A	7/1997	Russell et al.
5,657,374	A	8/1997	Russell et al.
5,682,256	A	10/1997	Motley et al.
5,765,099	A	6/1998	Georges et al.
5,774,789	A	6/1998	Van der Kaay et al.
5,781,865	A	7/1998	Gammon
5,787,344	A	7/1998	Scheinert
5,852,651	A	12/1998	Fischer et al.
5,883,882	A	3/1999	Schwartz
5,907,544	A	5/1999	Rypinski
5,930,682	A	7/1999	Schwartz et al.

(Continued)

Primary Examiner — Kwang B Yao
Assistant Examiner — Awet Haile
(74) *Attorney, Agent, or Firm* — Fogg & Powers LLC

(57) **ABSTRACT**

A system (**100**) and method for providing high capacity voice and high speed data communication between user equipment terminals (UEs **104**) and a public network (**108**). Generally, the system (**100**) includes a community Wireless Local Area Network (WLAN **102**) having a centralized base transceiver station (CBTS **114**) coupled to a public network (**108**), and several remote transceiver stations (RTSs **118**) each coupled to several UEs (**104**), and, via a radio link, to the CBTS. In one embodiment, the CBTS (**114**) and RTSs (**118**) include a Global Systems for Mobile communication/General Packet Radio Service (GSM/GPRS) transceiver (**148**, **154**) to provide data communication, and a WLAN transceiver (**150**, **156**) to provide voice communication. Preferably, the WLAN transceiver (**150**, **156**) is compatible with an open standard, such as IEEE 802.11. More preferably, the CBTS (**114**) and RTSs (**118**) include frequency converters (**152**, **158**), to up-convert a frequency of signals generated in at least one of the transceivers to couple the CBTS to the RTS via a signal at a frequency above standard GSM frequencies.

15 Claims, 16 Drawing Sheets

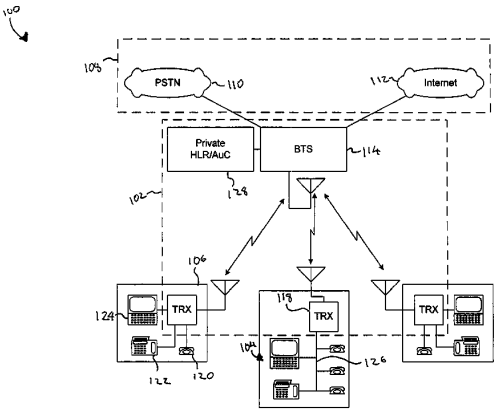

U.S. PATENT DOCUMENTS

5,949,775 A * 9/1999 Rautiola et al. 370/338
5,956,331 A * 9/1999 Rautiola et al. 370/338
5,969,837 A 10/1999 Farber et al.
5,978,650 A 11/1999 Fischer et al.
5,983,070 A 11/1999 Georges et al.
5,999,813 A * 12/1999 Lu et al. 455/435.2
6,005,884 A 12/1999 Cook et al.
6,014,546 A 1/2000 Georges et al.
6,081,716 A * 6/2000 Lu 455/445
6,128,496 A 10/2000 Scheinert
6,151,480 A 11/2000 Fischer et al.
6,157,810 A 12/2000 Georges et al.
6,178,512 B1 1/2001 Fifield
6,192,216 B1 2/2001 Sabat, Jr. et al.
6,243,577 B1 * 6/2001 Elrefaie et al. 455/426.2
6,353,600 B1 3/2002 Schwartz et al.
6,353,728 B1 3/2002 Fischer et al.
6,360,075 B1 3/2002 Fischer et al.
RE37,820 E 8/2002 Scheinert
6,430,395 B2 * 8/2002 Arazi et al. 455/41.2
6,459,900 B1 10/2002 Scheinert
6,480,702 B1 11/2002 Sabat, Jr.
6,556,551 B1 4/2003 Schwartz
6,574,472 B1 6/2003 Scheinert
6,594,496 B2 7/2003 Schwartz
6,597,912 B1 * 7/2003 Lu et al. 455/445
6,608,832 B2 * 8/2003 Forslow 370/353
6,694,134 B1 2/2004 Lu et al.
6,771,933 B1 8/2004 Eng et al.
6,785,558 B1 8/2004 Stratford et al.
6,801,767 B1 10/2004 Schwartz
6,804,532 B1 * 10/2004 Moon et al. 455/552.1
6,826,163 B2 11/2004 Mani et al.
6,826,164 B2 11/2004 Mani et al.
6,954,439 B2 * 10/2005 Pulkkinen et al. 370/280
6,954,616 B2 * 10/2005 Liang et al. 455/63.1
7,039,025 B1 * 5/2006 Menon et al. 370/328
7,039,027 B2 * 5/2006 Bridgelall 370/329
7,039,399 B2 5/2006 Fischer
7,117,015 B2 10/2006 Scheinert et al.
7,127,175 B2 10/2006 Mani et al.
7,133,697 B2 * 11/2006 Judd et al. 455/561
7,149,521 B2 * 12/2006 Sundar et al. 455/435.1
7,205,864 B2 4/2007 Schultz, Jr. et al.
7,313,415 B2 12/2007 Wake et al.
7,400,832 B2 7/2008 Beacham et al.
RE40,564 E 11/2008 Fischer et al.
7,450,939 B2 11/2008 Scheinert
7,469,105 B2 12/2008 Wake et al.
7,548,695 B2 6/2009 Wake
7,555,300 B2 6/2009 Scheinert et al.
7,580,424 B2 * 8/2009 Ravishankar et al. 370/468
7,764,655 B2 7/2010 Ransome et al.
7,817,958 B2 10/2010 Scheinert et al.
7,844,273 B2 11/2010 Scheinert
7,848,770 B2 12/2010 Scheinert
2002/0025779 A1 * 2/2002 Knight et al. 455/11.1
2002/0037717 A1 * 3/2002 Laube et al. 455/422
2002/0085516 A1 * 7/2002 Bridgelall 370/329
2002/0086682 A1 7/2002 Naghian
2002/0090966 A1 * 7/2002 Hansen et al. 455/522
2002/0147008 A1 * 10/2002 Kallio 455/426
2002/0150084 A1 10/2002 Lee et al.
2002/0160748 A1 10/2002 Rahman et al.
2003/0021252 A1 1/2003 Harper et al.
2003/0081565 A1 5/2003 McIntosh et al.
2006/0019664 A1 * 1/2006 Nelakanti et al. 455/436
2007/0008939 A1 1/2007 Fischer
2007/0167149 A1 * 7/2007 Comstock et al. 455/405
2008/0174502 A1 7/2008 Oren et al.
2008/0175175 A1 7/2008 Oren et al.
2008/0268835 A1 * 10/2008 Struhsaker 455/426.2

* cited by examiner

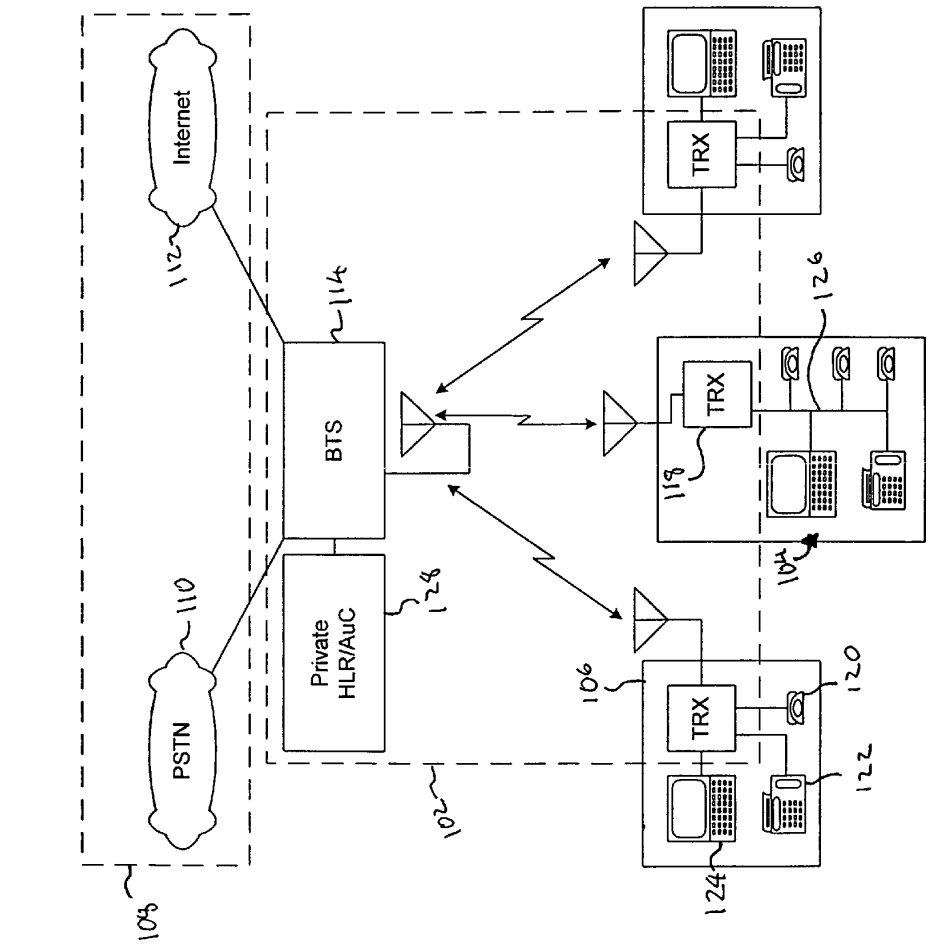
Internet
112
PSTN
110
108
BTS
114
Private
HLR/AuC
128
102
TRX
106
TRX
118
TRX
104
120
122
124
126

FIG. 1A

100

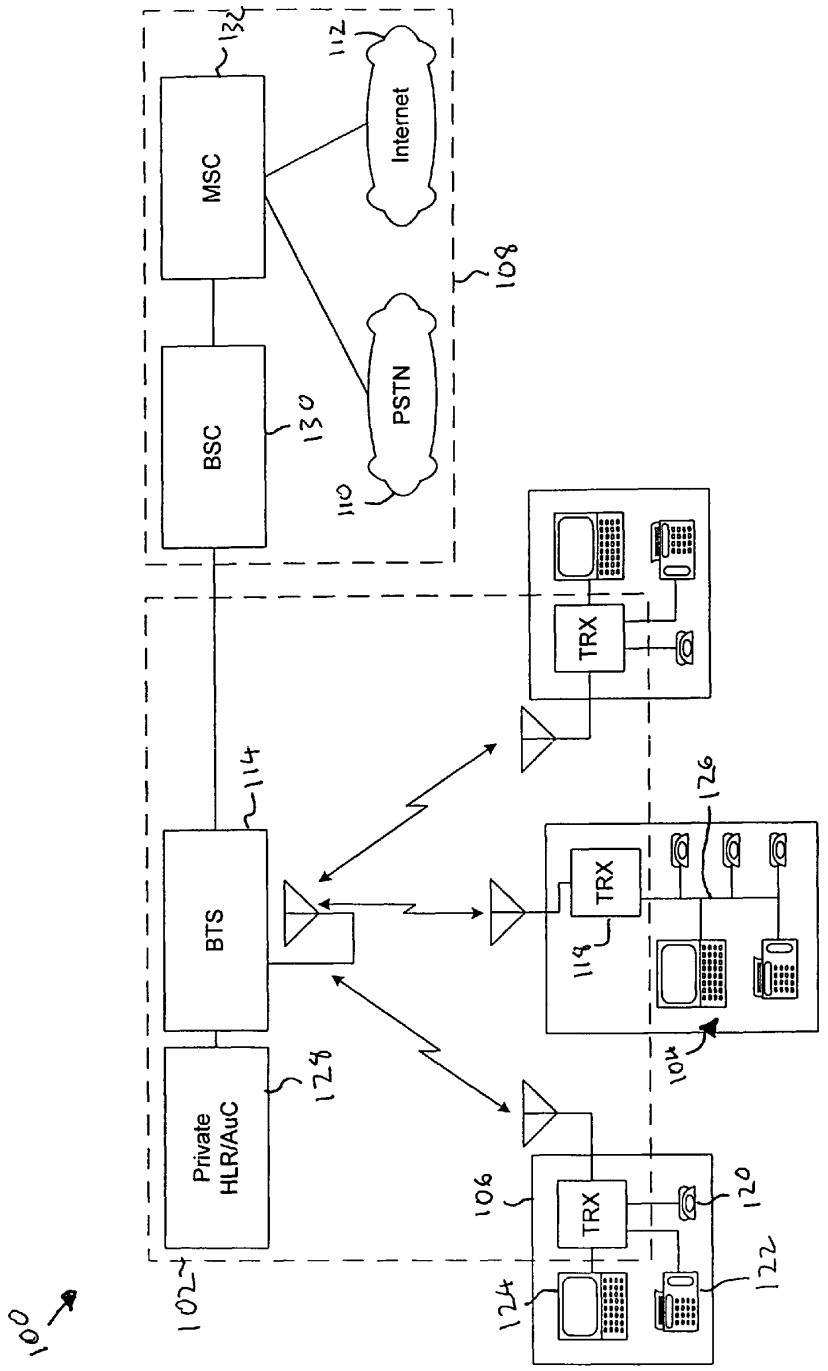
MSC
BSC
Internet
PSTN
BTS
Private HLR/AuC
TRX
TRX
TRX
100
102
104
106
108
110
112
114
116
118
120
122
124
126
128
130
132

FIG. 1B

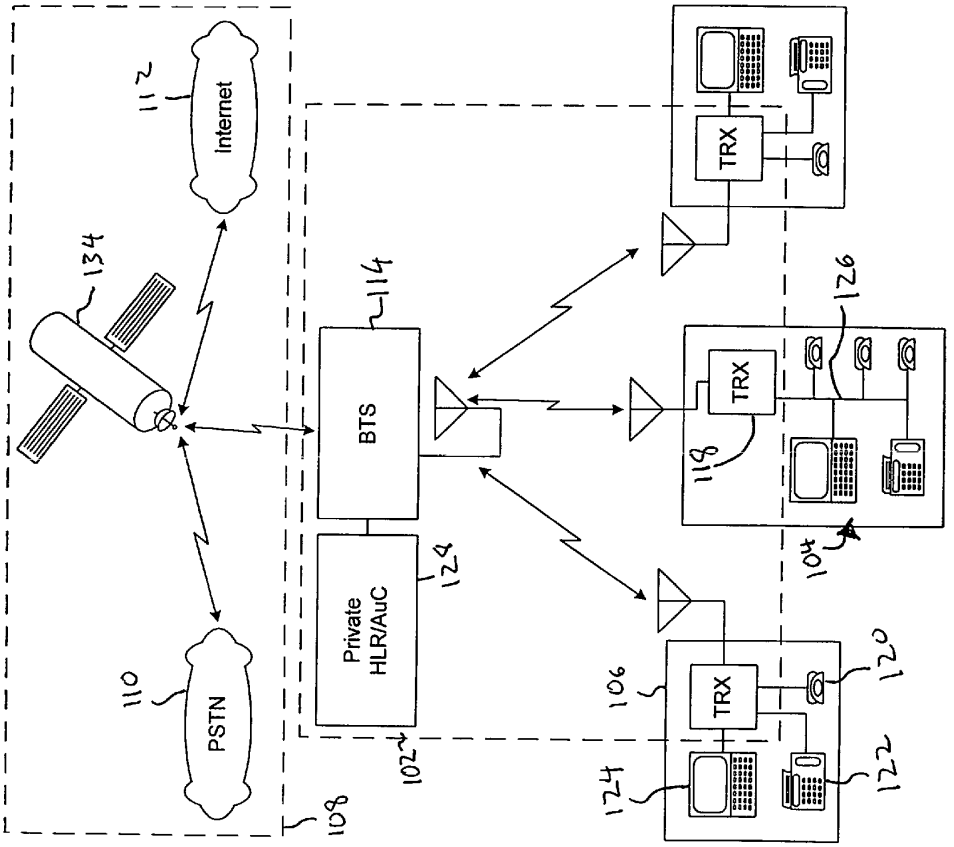
Internet
112
134
PSTN
110
108
BTS
114
Private
HLR/AuC
124
102
TRX
106
124
122
120
TRX
118
126
104
TRX

FIG. 1C

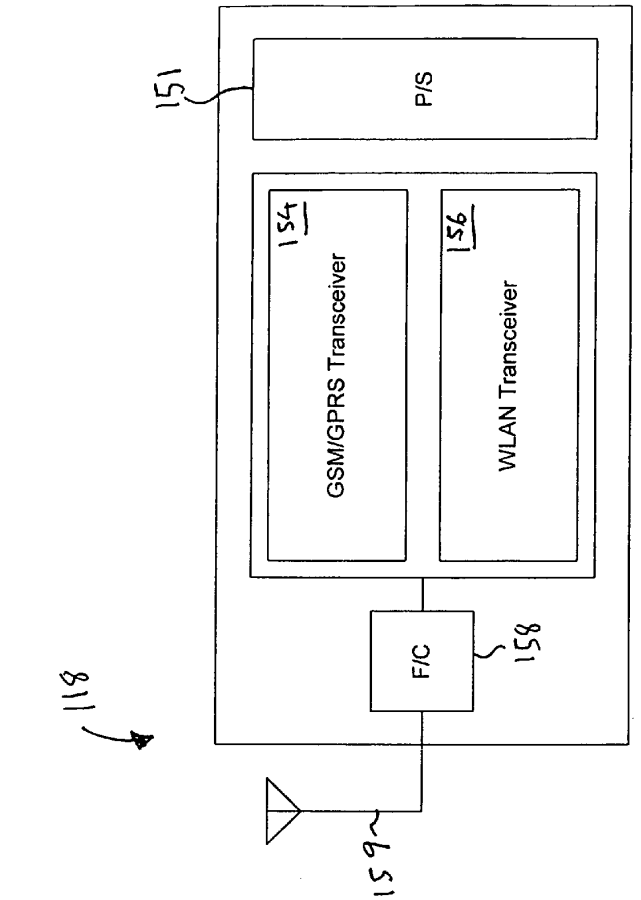
118
151
P/S
154
GSM/GPRS Transceiver
156
WLAN Transceiver
F/C
158
159

FIG. 3

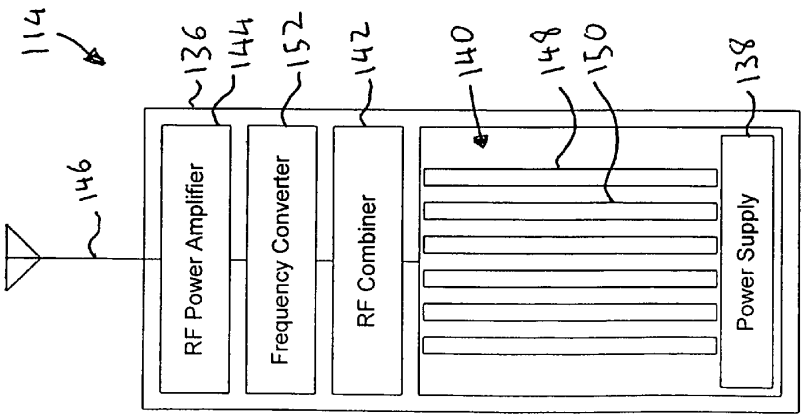
114
146
136
144
152
142
140
148
150
138
RF Power Amplifier
Frequency Converter
RF Combiner
Power Supply

FIG. 2

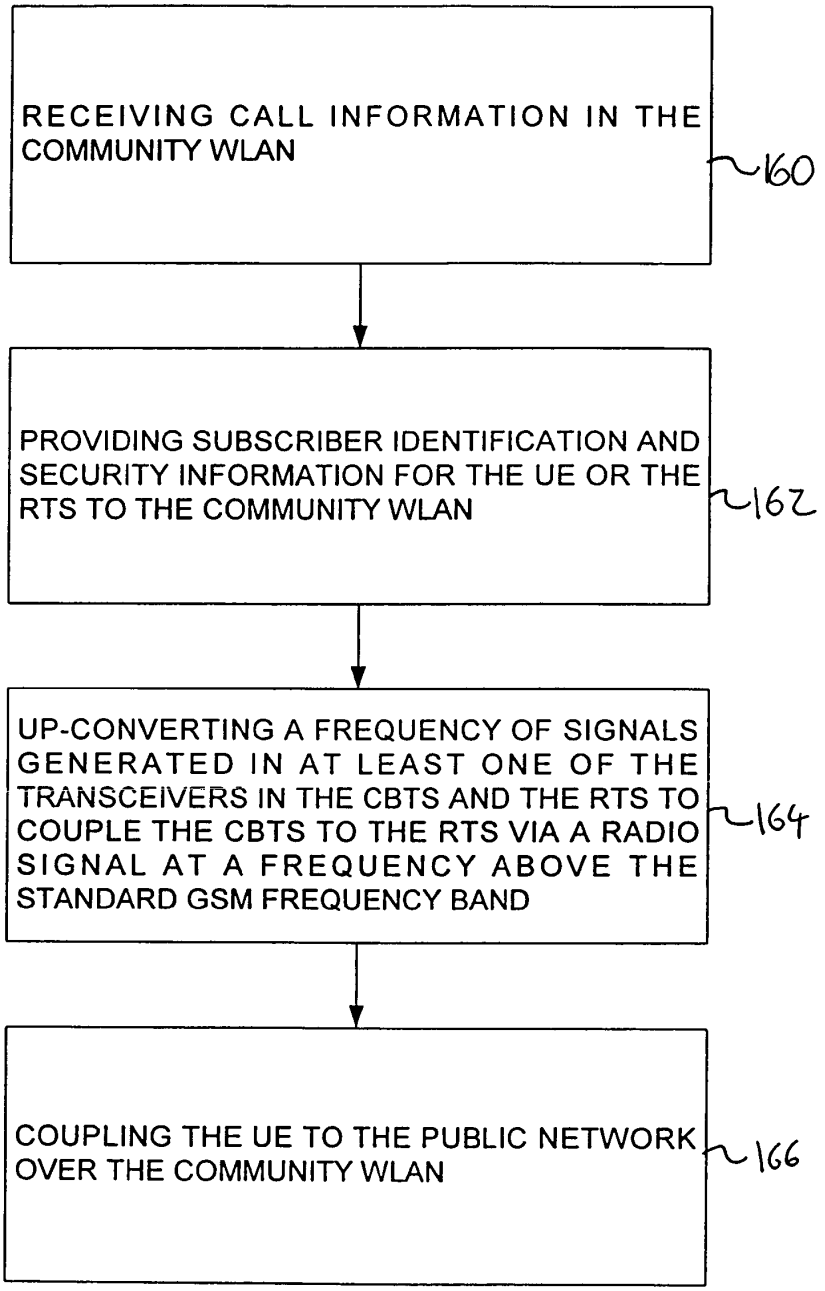
RECEIVING CALL INFORMATION IN THE COMMUNITY WLAN
160
PROVIDING SUBSCRIBER IDENTIFICATION AND SECURITY INFORMATION FOR THE UE OR THE RTS TO THE COMMUNITY WLAN
162
UP-CONVERTING A FREQUENCY OF SIGNALS GENERATED IN AT LEAST ONE OF THE TRANSCEIVERS IN THE CBTS AND THE RTS TO COUPLE THE CBTS TO THE RTS VIA A RADIO SIGNAL AT A FREQUENCY ABOVE THE STANDARD GSM FREQUENCY BAND
164
COUPLING THE UE TO THE PUBLIC NETWORK OVER THE COMMUNITY WLAN
166

FIG. 4

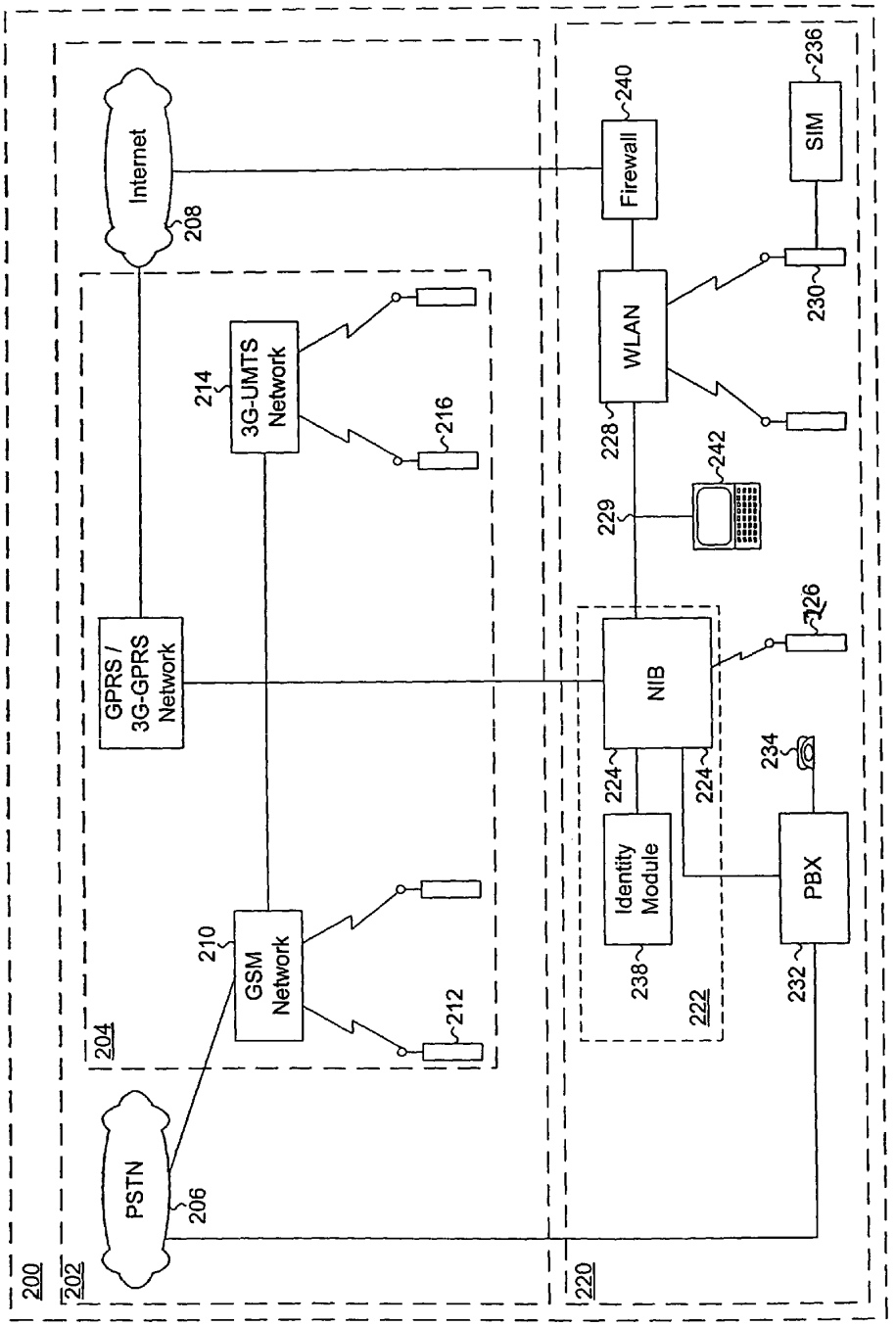
200
202
204
220
222
Internet
208
PSTN
206
GPRS / 3G-GPRS Network
3G-UMTS Network
214
216
GSM Network
210
212
Firewall
240
WLAN
228
229
NIB
224
224
Identity Module
238
PBX
232
SIM
236
230
242
226
234

FIG. 5

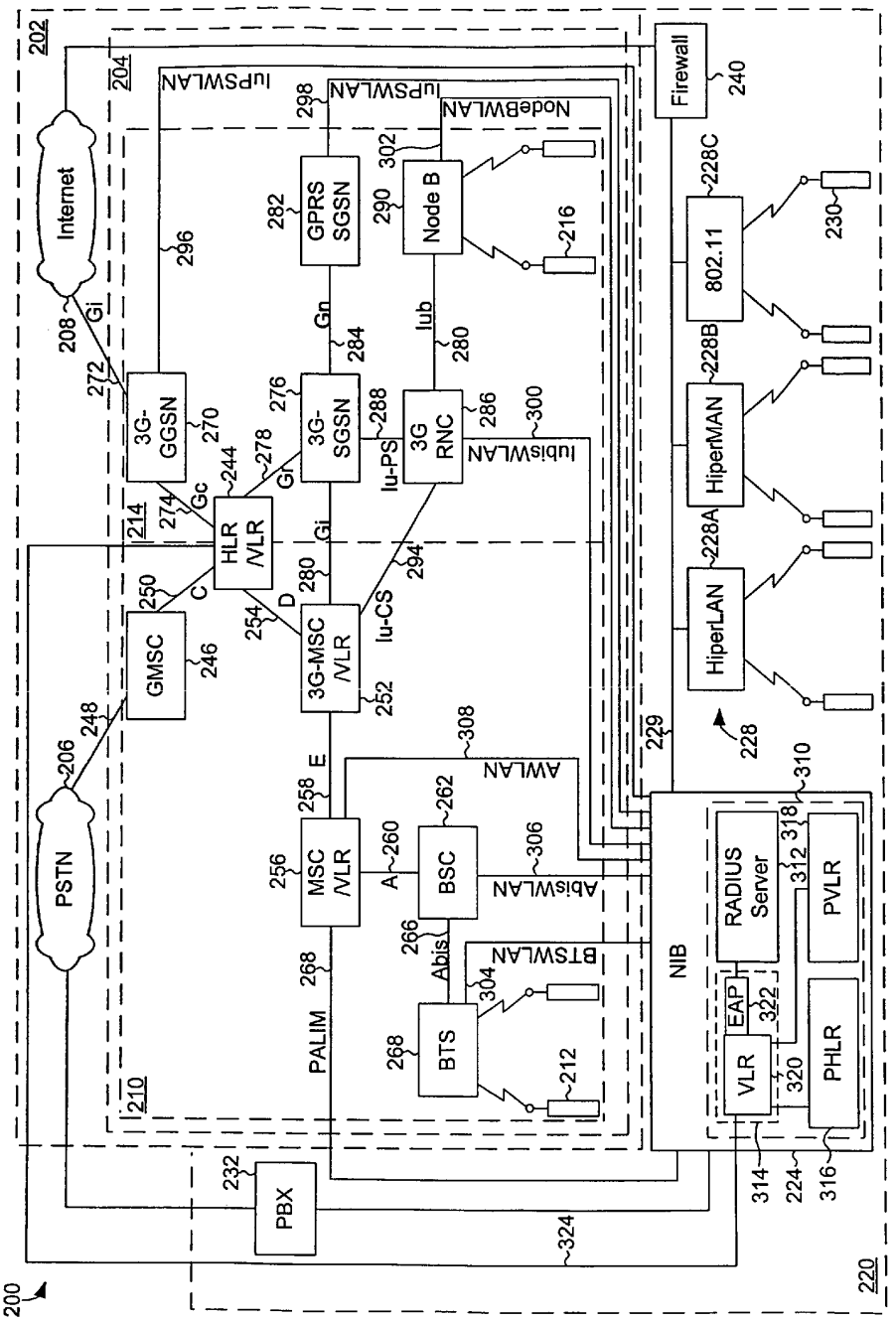
Internet
PSTN
3G-GGSN
HLR /VLR
GMSC
3G-SGSN
3G-MSC /VLR
MSC /VLR
GPRS SGSN
3G RNC
BSC
BTS
Node B
PBX
Firewall
802.11
HiperMAN
HiperLAN
NIB
RADIUS Server
PVLR
VLR
PHLR
EAP
IuPSWLAN
NodeBWLAN
IubisWLAN
AWLAN
AbisWLAN
BTSWLAN
PALIM
Gi
Gc
Gn
Iub
Iu-PS
Iu-CS
C
D
E
A
Abis
200
202
204
208
206
210
214
220
224
228
228A
228B
228C
229
230
232
240
244
246
248
250
252
254
256
258
260
262
266
268
270
272
274
276
278
280
282
284
286
288
290
294
296
298
300
302
304
306
308
310
312
314
316
318
320
322
324
216
212

FIG. 6

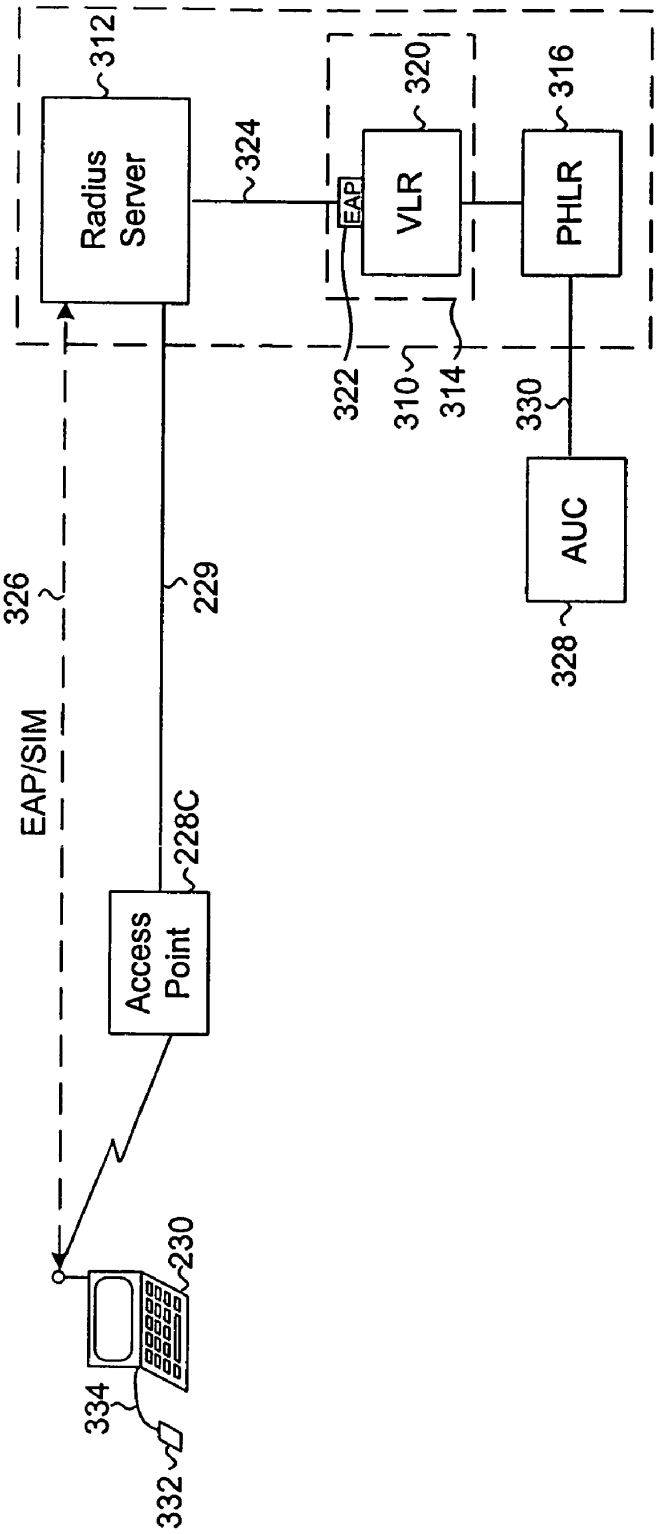
Radius Server
312
324
EAP
VLR
320
PHLR
316
322
310
314
330
AUC
328
326
229
EAP/SIM
228C
Access Point
230
334
332

FIG. 7

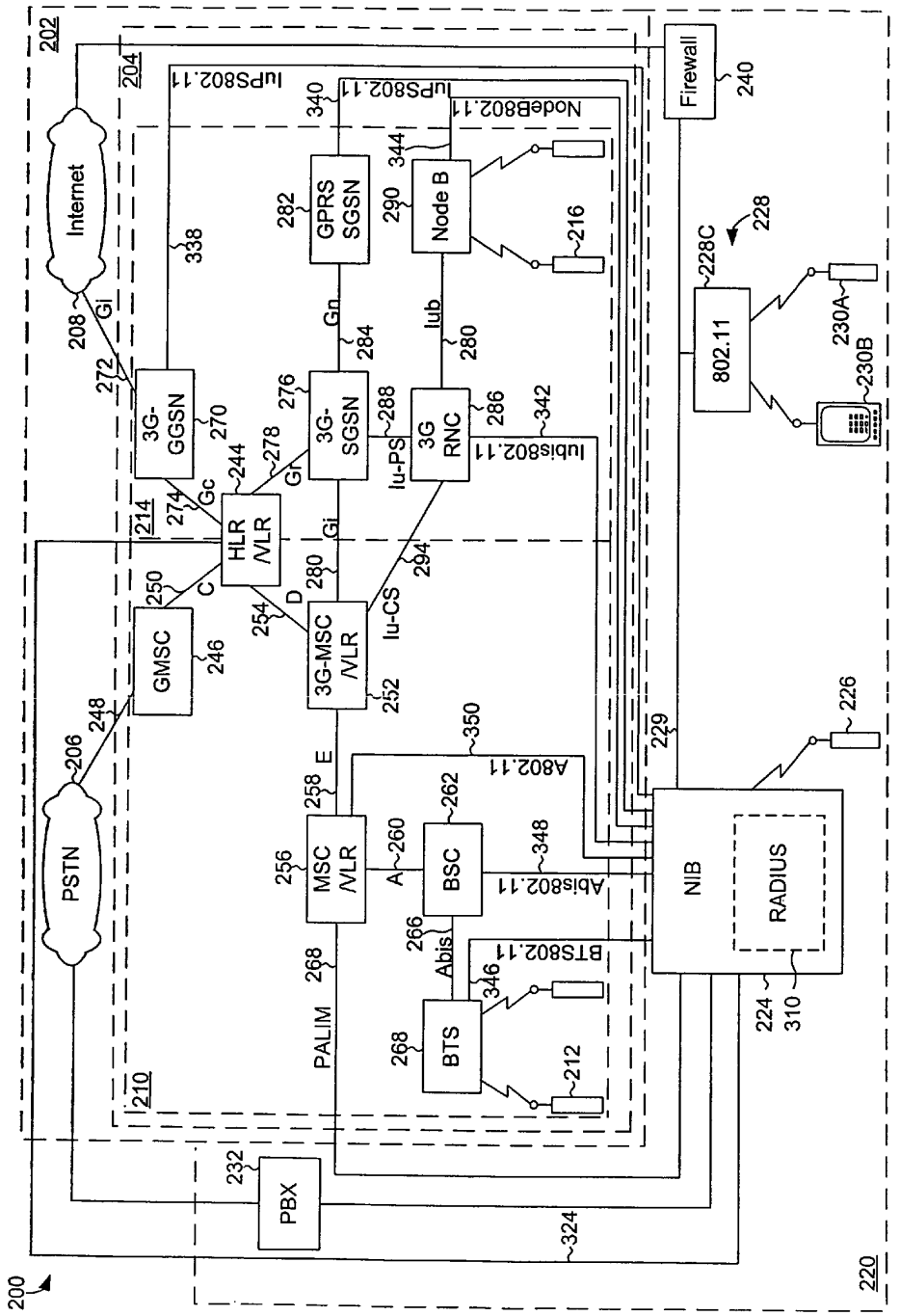
Internet
PSTN
3G-GGSN
GMSC
HLR /VLR
3G-SGSN
3G-MSC /VLR
GPRS SGSN
3G RNC
Node B
MSC /VLR
BSC
BTS
PBX
Firewall
802.11
NIB
RADIUS
IuPS802.11
NodeB802.11
Iubis802.11
A802.11
Abis802.11
BTS802.11
PALIM
Gi
Gc
Gn
Iub
Iu-PS
Iu-CS
C
D
E
A
Abis
200
202
204
208
206
210
214
220
224
226
228
228C
229
230A
230B
232
240
244
246
248
250
252
254
256
258
260
262
266
268
270
272
274
276
278
280
282
284
286
288
290
294
310
212
216
324
338
340
342
344
346
348
350

FIG. 8

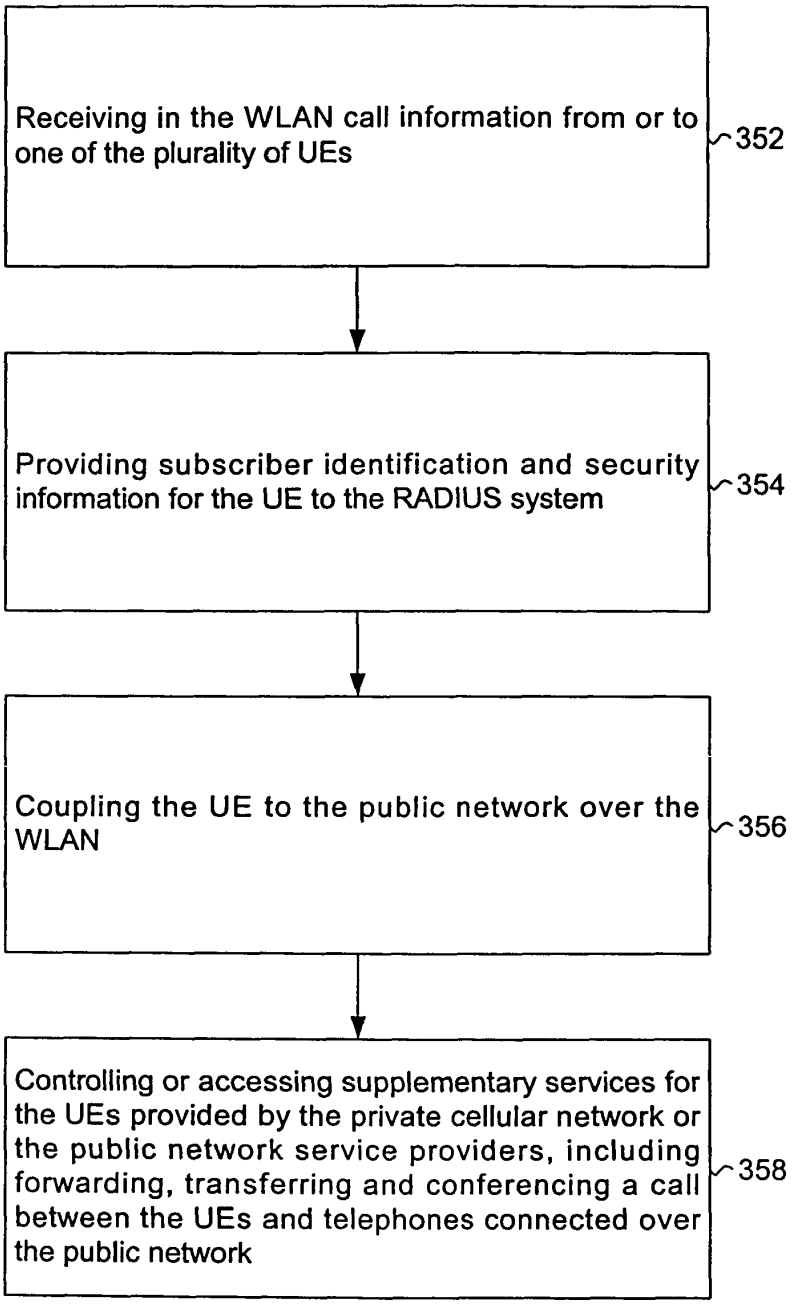
Receiving in the WLAN call information from or to one of the plurality of UEs
352
Providing subscriber identification and security information for the UE to the RADIUS system
354
Coupling the UE to the public network over the WLAN
356
Controlling or accessing supplementary services for the UEs provided by the private cellular network or the public network service providers, including forwarding, transferring and conferencing a call between the UEs and telephones connected over the public network
358

FIG. 9

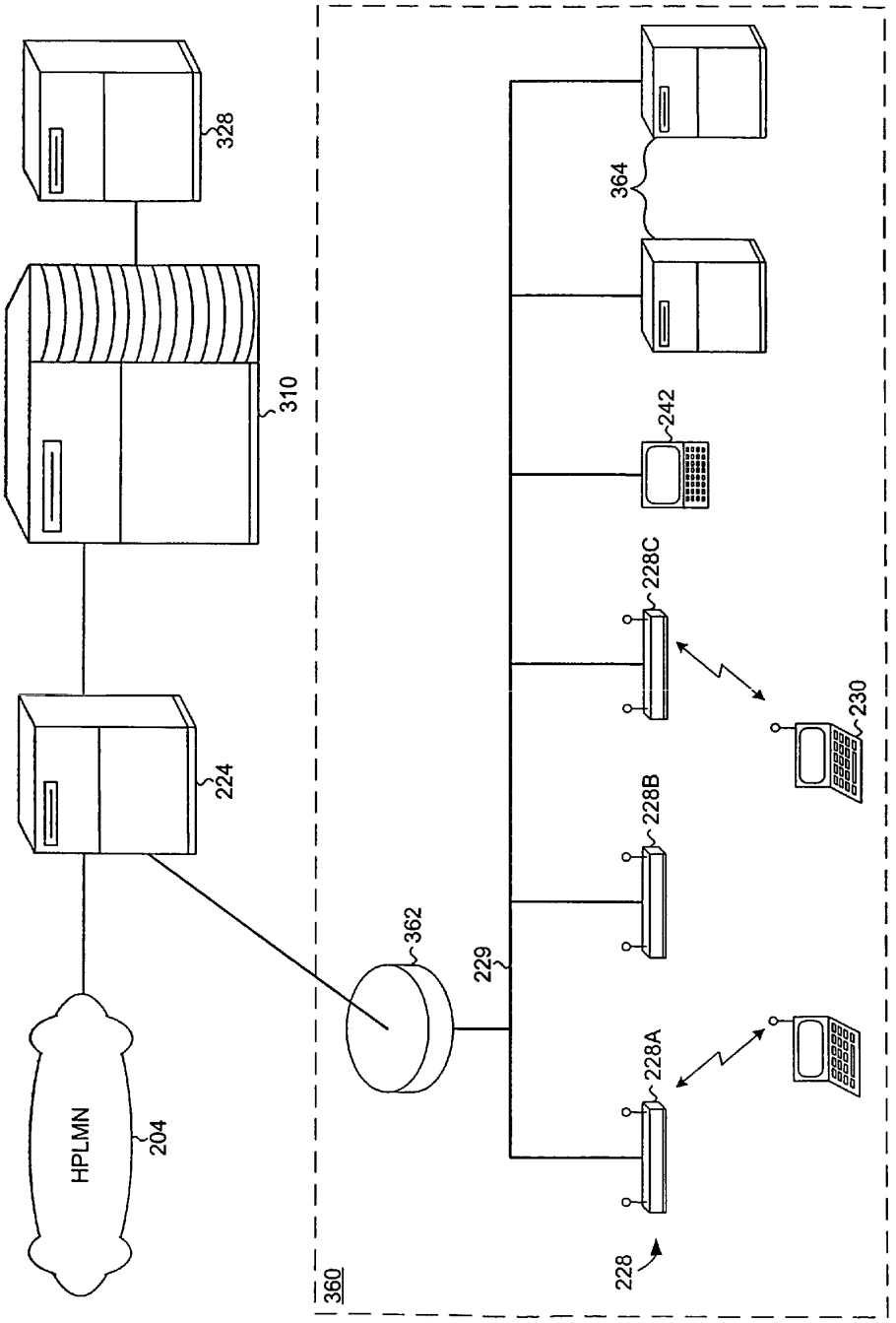
328
310
224
HPLMN
204
362
229
360
228
228A
228B
228C
230
242
364

FIG. 10

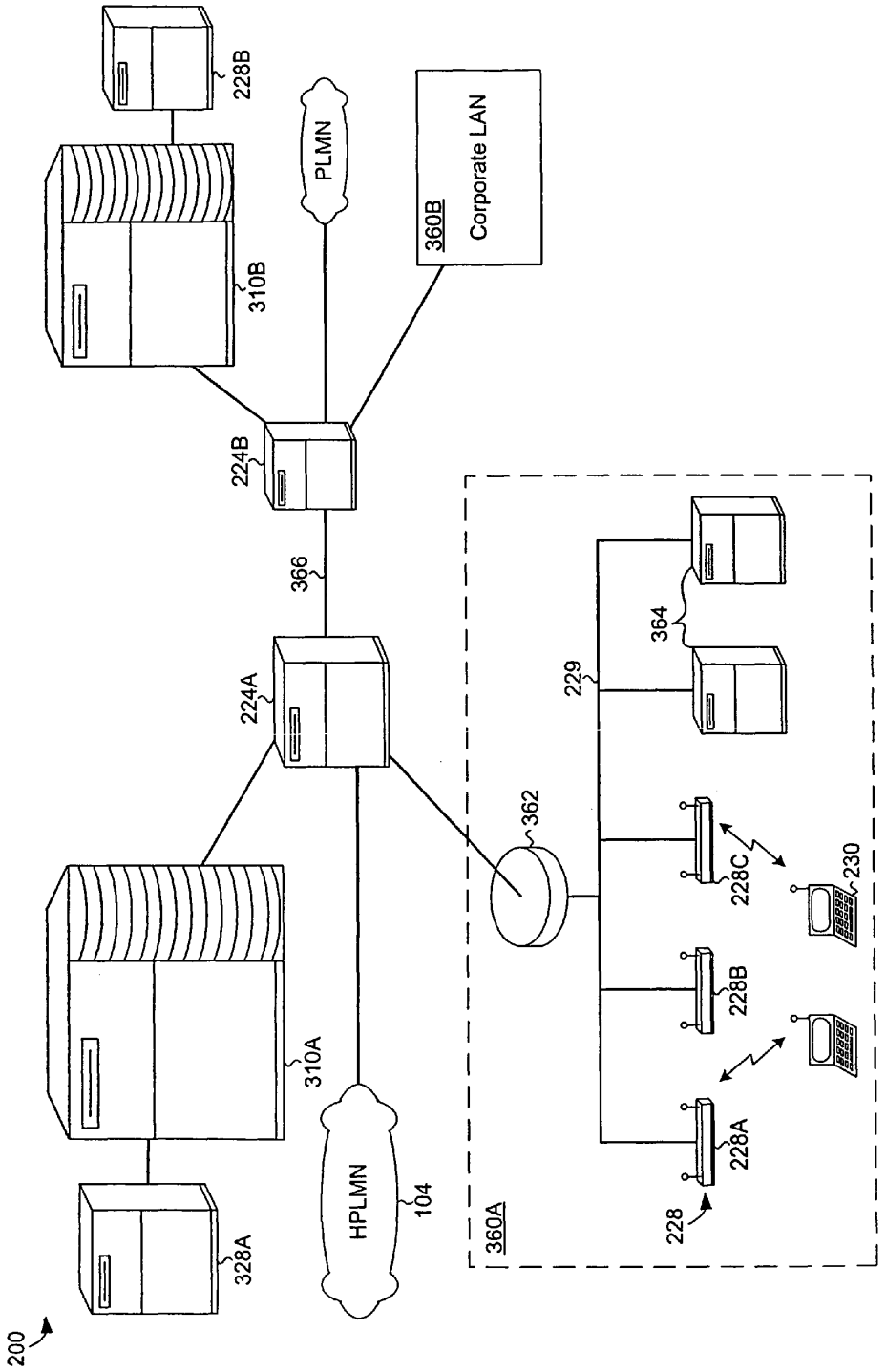
200
328A
310A
HPLMN
104
224A
366
224B
310B
228B
PLMN
360B
Corporate LAN
360A
362
229
364
228
228A
228B
228C
230

FIG. 11

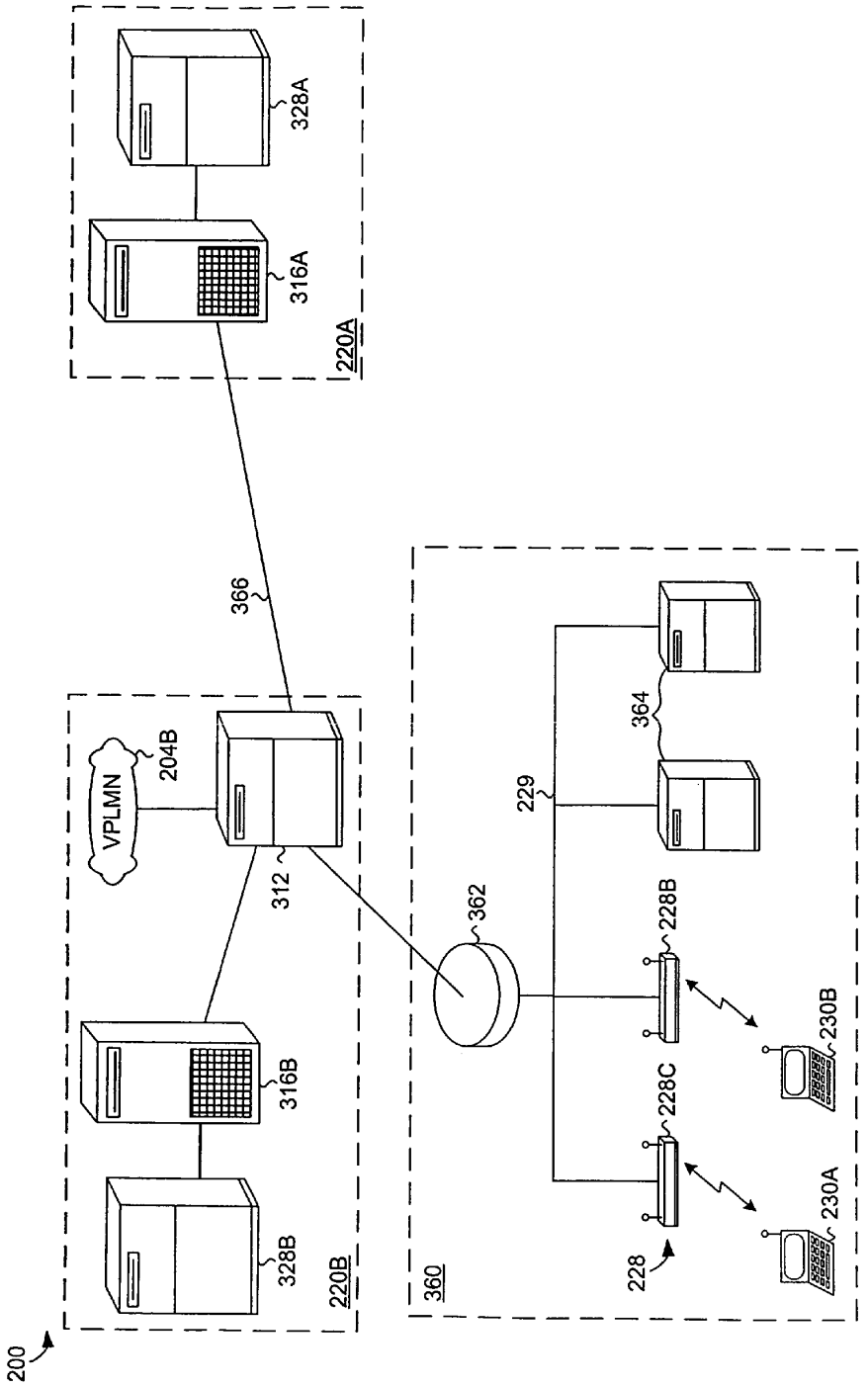
200
220A
328A
316A
366
220B
VPLMN
204B
312
316B
328B
360
362
229
364
228B
228C
228
230B
230A

FIG. 12

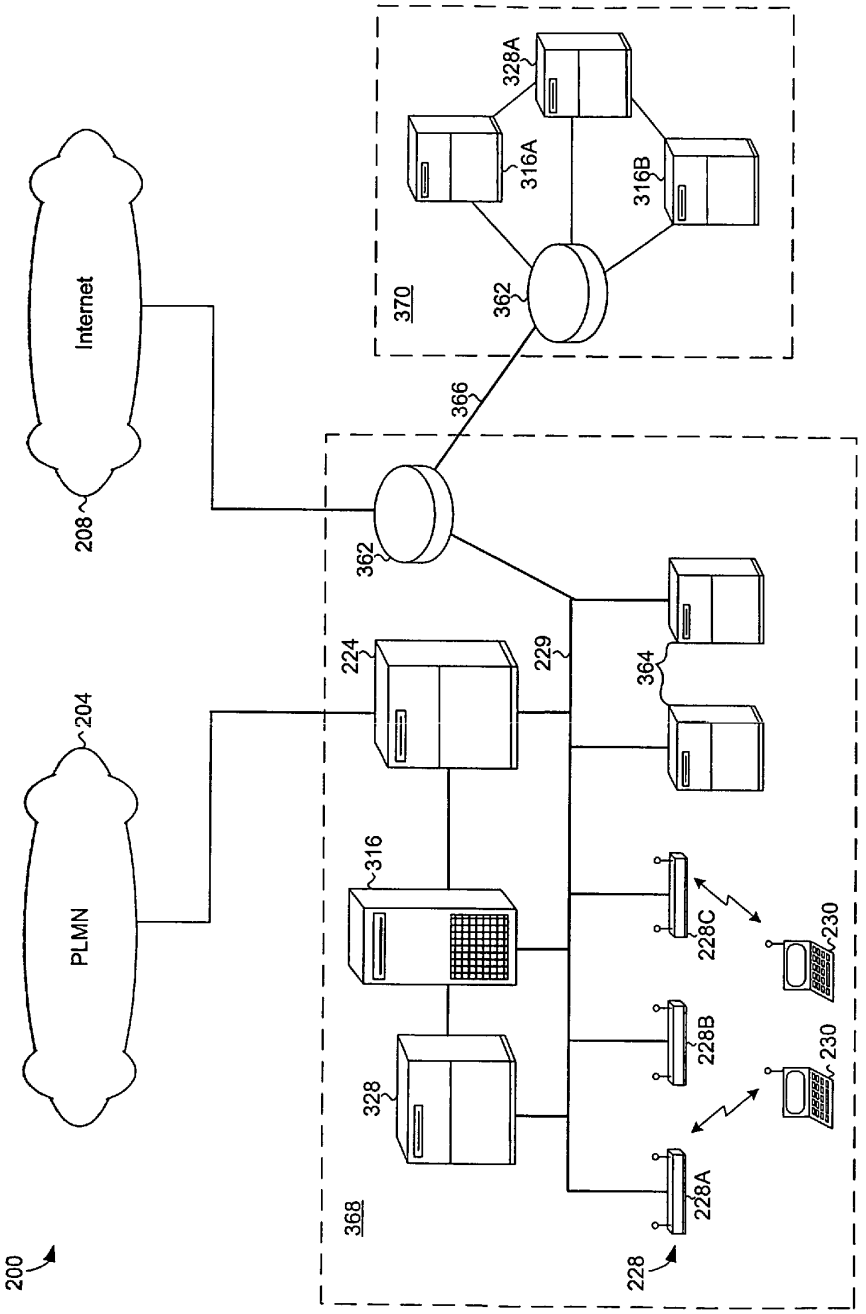
200
PLMN
204
208
Internet
224
229
316
328
368
228
228A
228B
228C
230
230
364
362
366
370
362
316A
316B
328A

FIG. 13

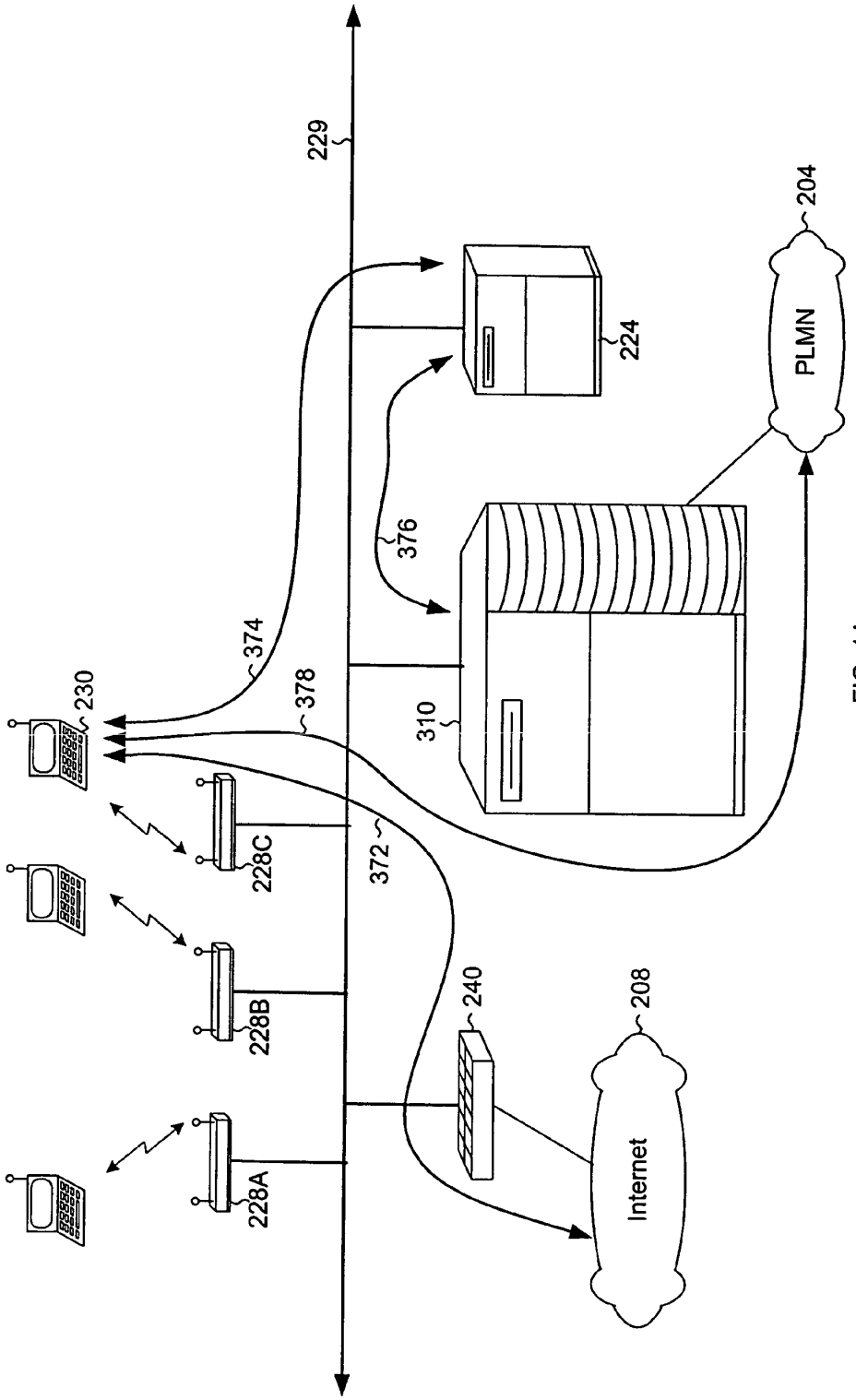
229
224
204
PLMN
376
374
378
230
310
228C
372
228B
240
208
228A
Internet

FIG. 14

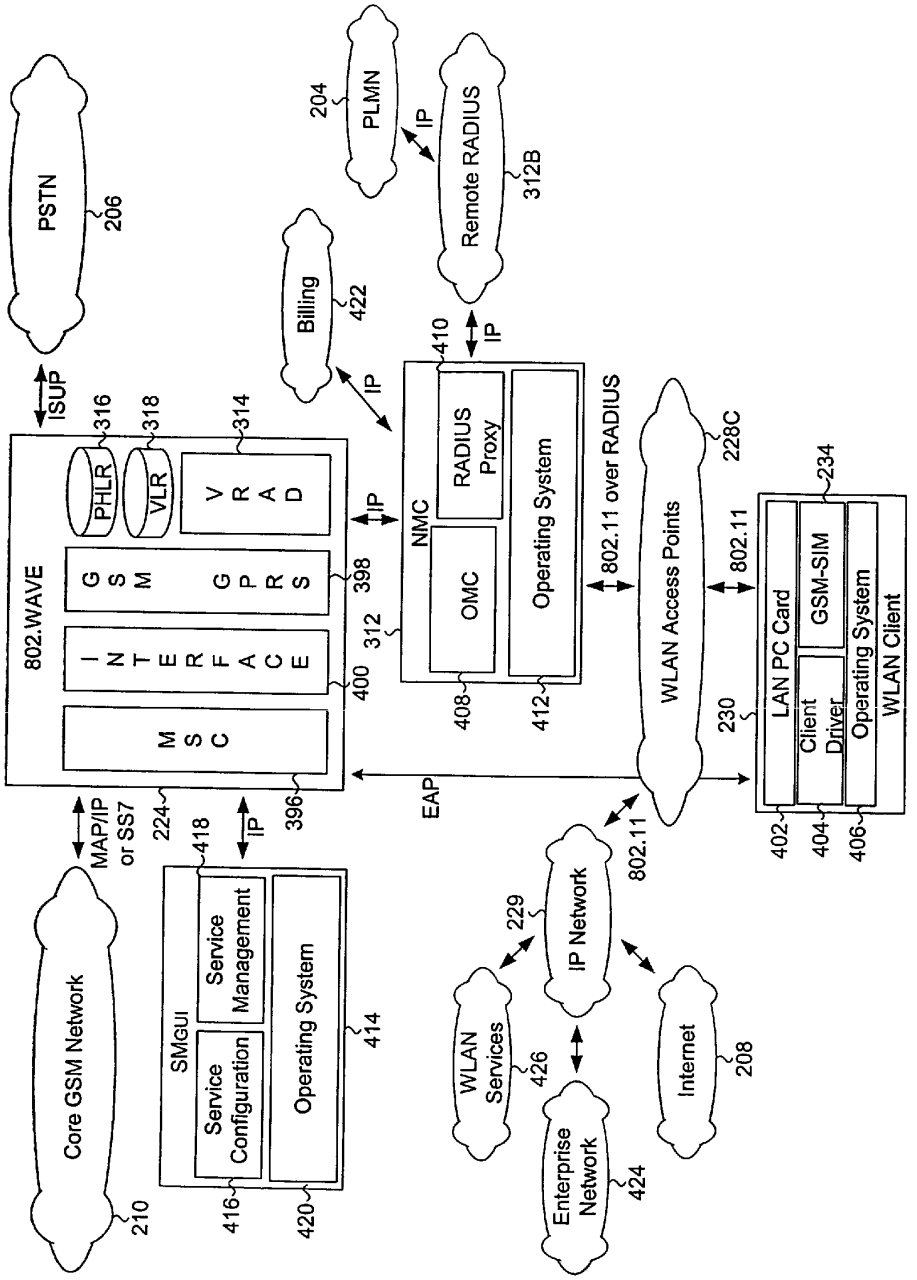
PSTN
206
ISUP
802.WAVE
PHLR
316
VLR
318
VRAD
314
GSM GPRS
398
INTERFACE
400
MSC
396
224
MAP/IP or SS7
IP
Core GSM Network
210
SMGUI
418
Service Management
Service Configuration
416
Operating System
414
420
Billing
422
IP
PLMN
204
IP
Remote RADIUS
312B
IP
NMC
410
RADIUS Proxy
OMC
Operating System
312
408
412
802.11 over RADIUS
EAP
WLAN Access Points
228C
802.11
LAN PC Card
234
GSM-SIM
Client Driver
Operating System
WLAN Client
230
402
404
406
802.11
IP Network
229
WLAN Services
426
Enterprise Network
424
Internet
208

FIG. 15

COMMUNICATION SYSTEM HAVING A COMMUNITY WIRELESS LOCAL AREA NETWORK FOR VOICE AND HIGH SPEED DATA COMMUNICATION

REFERENCE TO RELATED APPLICATIONS

This application is a continuation of U.S. patent application Ser. No. 10/655,152, entitled Communication System Having a Community Wireless Local Area Network for Voice and High Speed Data Communication, filed Sep. 3, 2003, now abandoned which is a Continuation of U.S. patent application Ser. No. 10/342,591 entitled Communication System Having a Community Wireless Local Area Network for Voice and High Speed Data Communication, filed Jan. 14, 2003, now abandoned which claims the priority to U.S. Provisional Application Ser. No. 60/353,815, entitled Communication System Having a Community Wireless Local Area Network for Voice and High Speed Data Communication, filed Jan. 31, 2002, which is incorporated herein by reference.

FIELD

The present invention relates generally to communication systems, and more particularly to a communication system including a community Wireless Local Area Network (WLAN) to provide voice and data communication between a number of user equipment terminals and a public network via the community WLAN, and a method for using the same.

BACKGROUND

The use of communication networks and devices, including telephones, pagers, facsimile machines, computers and network access appliances, has increased exponentially in recent years. In many areas and communities, this increased demand for voice and data communication services has outpaced the growth in the public infrastructure required to support these services.

One possible solution to the above problem is the use of conventional public or private wireless networks. However, this approach is not wholly satisfactory for a number of reasons. A fundamental drawback to the use of conventional wireless networks is the cost associated with radios or user equipment terminals (UEs) capable of communicating with conventional GSM (Global Systems for Mobile communication), GPRS (General Packet Radio Service) or 3G (third generation cellular) wireless networks. Although the expense of these UEs is generally not borne by a service provider of a wireless network providing voice and/or data communication to a community, it will be appreciated that higher costs translates to fewer potential subscribers. Thus, it is less likely the service provider would be willing to bear the expense of installing necessary base stations and switching centers in the community.

Another problem in areas or communities that are under served by an existing wireless network, is the difficulty and expense of scaling the network to provide services to additional users or additional services. For example, the typical approach used by wireless network service providers to provide increased capacity, is to install additional base stations and switching centers. As noted above, due to the expense this is unacceptable in certain rural or impoverished areas and communities. Moreover, this is also unacceptable in many developed and urban areas, where overcrowding of the licensed frequency bands leads to diminishing increases in capacity for additional base stations and switching centers due to interference with overlapping base stations.

Accordingly, there is a need for an inexpensive communication system and method of operating the same, that are capable of providing voice and high speed data communication to users in communities hitherto un-served or under served by conventional communication systems. There is a further need for a communication system and method of operating the same that can be quickly and inexpensively scaled up to provide service to increasing numbers of users. There is a still further need for a communication system and method of operating the same that provides a high capacity for voice and data communication.

The system and method of the present invention provides these and other advantages over the prior art.

SUMMARY

It is an object of the present invention to provide a communication system having capable of providing high capacity voice and high speed data communication between a number of user equipment terminals (UEs) and a public network via a community Wireless Local Area Network (WLAN).

In one aspect the invention is directed to a communication system for providing voice and data communication between a public network and a number of UEs. Generally, the communication system includes a community WLAN having a centralized base transceiver station (CBTS) coupled to the public network, and a number of remote transceiver stations (RTSs) each coupled to a number of the UEs, and, via a radio link, to the CBTS. Preferably, the public network includes a public switched telephone network and the Internet, and the CBTS is coupled to the public network via a trunk. Alternatively, the CBTS may be coupled to the public network via a satellite link or other public wireless network.

In one embodiment, the CBTS and each RTS includes a Global Systems for Mobile communication/General Packet Radio Service (GSM/GPRS) transceiver to provide data communication between the public network and the UEs, and a WLAN transceiver to provide voice communication between the public network and the UEs. The WLAN transceiver is compatible with an open standard protocol, for example, HIgh Performance Local Area Network (HiperLAN/1), HIgh Performance Local Area Network (HiperLAN/2), and Institute of Electrical and Electronics Engineers 802.11 (IEEE 802.11).

In another embodiment, the CBTS and each RTS includes a frequency converter, to up-convert a frequency of signals generated in at least one of the transceivers in the CBTS and the RTS to couple the CBTS to the RTS via a radio signal at a frequency above a standard GSM frequency band of about 900 Mhz. Preferably, the CBTS and RTSs are adapted to communicate using GSM technology at a frequency band within (ETSI) specification. More preferably, the CBTS and RTSs are adapted to communicate using GSM technology at a frequency band of at least about 3.5 Ghz.

In another aspect, the invention is directed to a transceiver station for use in a communication system. Generally, the transceiver station includes an antenna, a Global Systems for Mobile communication (GSM) transceiver, and a frequency converter coupled between the GSM transceiver to enable communication using GSM technology at a frequency above conventional GSM frequency bands. Preferably, the transceiver station is adapted to communicate using GSM technology at a frequency band within (ETSI) specification. More

preferably, the transceiver station is adapted to communicate using GSM technology at a frequency band of at least about 3.5 Ghz.

In one embodiment, the GSM transceiver is a GSM/General Packet Radio Service (GSM/GPRS) transceiver, and the transceiver station is adapted to communicate data as well as voice.

In yet another aspect, the invention is directed to a method of providing voice and data communication between a number of UEs and a public network, using a communication system including a community WLAN. Generally, the method includes steps of: (i) receiving call information in the community WLAN; (ii) providing subscriber identification and security information for the UE to the community WLAN; and (iii) coupling the UE to the public network over the community WLAN.

In one embodiment, the public network includes a public switched telephone network and the Internet, and the step of coupling the UE to the public network involves coupling the CBTS to the public network via a trunk. Alternatively, the CBTS may be coupled to the public network via a satellite link or other public wireless network.

In another embodiment, the CBTS and each RTS includes a Global Systems for Mobile communication/General Packet Radio Service (GSM/GPRS) transceiver, and the step of coupling the UE to the public network is accomplished by coupling the CBTS to the RTS using a GSM standard to provide data communication between the public network and the UEs. In one version of this embodiment, the CBTS and each RTS further includes a WLAN transceiver, and the step of coupling the UE to the public network involves coupling the CBTS to the RTS using a WLAN standard to provide voice communication between the public network and the UEs. Preferably the WLAN standard is an open standard protocol, such as the HIgh Performance Local Area Network (HiperLAN/1) standard, the HiperLAN/2 standard, or an Institute of Electrical and Electronics Engineers 802.11 (IEEE 802.11) standard.

In yet another embodiment, the CBTS and each of the RTSs includes a frequency converter, and the step of coupling the UE to the public network includes the step of up-converting a frequency of a signal generated in at least one of the GSM/GPRS and the WLAN transceivers to couple the CBTS to the RTS via a radio signal at a frequency above a standard GSM frequency band of 900 Mhz. Preferably, the step of up-converting the frequency of the signal involves up-converting the frequency of the signal to a frequency band within (ETSI) specification. More preferably, the step of up-converting the frequency of the signal involves up-converting the frequency of the signal to a frequency band of at least about 3.5 Ghz.

Advantages of the apparatus and method of the present invention include: low cost to manufacture and install; high speed transmission of data, up to 54 to 100 Mbps; high capacity for voice and data communication; and easy scalability since, an 802.11 based WLAN, for example, permits up to 256 RTSs per CBTS.

It is also an object of the present invention to provide a communication system that bridges the gap between an existing public network and WLANs to provide authentication and roaming capabilities of the former with the high-speed and high-bandwidth of the latter.

It is a further object of the present invention to provide a communication system in which a UE terminal of a WLAN operating in an unregulated frequency band is able to access a public network, such as a public switched telephone network, a public GSM cellular network, public 3G network, or the Internet, and/or a private network, such as a private cellular network, a campus or enterprise 3G network, or a private branch exchange (PBX) with a functionality and capabilities similar to those available from mobile stations of more expensive GSM cellular networks and 3G cellular networks.

It is a still further object of the present invention to provide a communication system in which GSM/GPRS/3G broadband services are provided using WLAN broadband technology and in particular using 802.11 based technology.

In one aspect, the present invention is directed to communication system which enables a user to access a public network through low powered unregulated user equipment terminals (UEs) or transceivers. Generally, the communication system includes a public cellular network and a wireless local area network (WLAN) coupled to the public cellular network, the WLAN configured to facilitate communication between the UEs and the public cellular network. The public cellular network can be a global system for mobile communications (GSM) network coupled to a public switched telephone network (PSTN). Alternatively, the public cellular network can further include a third-generation mobile communications (3G) network coupled to the GSM network and to the Internet. Optionally, the communication system further includes a private cellular network coupled to the WLAN to facilitate communication between the UEs and mobile stations associated with the private cellular network.

In one embodiment, the communication system further comprises a Remote Authentication Dial In User Service (RADIUS) server to authenticate UEs accessing the communication system through the WLAN and to authorize access to the communication system. Where the communication system includes multiple linked WLANs, a home location registry (HLR), including, for example, a home location register and/or a home subscription sever, and visitor location registry (VLR) coupled to the RADIUS server provide roaming capabilities for the UEs among the plurality of WLANs.

In another embodiment, the UE includes a computer program to enable it to access and control supplementary services and/or value-added services provided by the public and/or private network. Supplementary services include, for example, Voice Group Call Service, Voice Broadcast Service, Service definition Line Identification Supplementary Services, Call Forwarding Supplementary Services, Call Waiting and Call Hold Supplementary Services, Multiparty call conferencing, Closed User Group Supplementary Services, Advice of Charge Supplementary Services, Call Barring Supplementary Services, Unstructured Supplementary Service Data, Explicit Call Transfer, Completion of Calls to Busy Subscriber, Short Message Service, and Follow Me. Value-added services include, for example, e-mail, calender, and wireless inventory, etcetera.

Preferably, the WLAN is compatible with one or more high performance wireless communication standards. For example, a European Telecommunications Standards Institute (ETSI) standard for Broadband Radio Access Networks (BRAN), such as a high performance local area network (HiperLAN/1), HiperLAN/2, or a high performance Metropolitan Access Network (HiperMAN). Other examples, include Institute of Electrical and Electronics Engineers 802.11 standards (IEEE 802.11), such as 802.11(a) and 802.11(b).

A communication system according to the present invention is particularly useful to operators of hotels, hotel chains, airports, airport building maintenance, and other like enterprises for deployment of in-building broadband RF services, or for users of UEs with e-mail messaging capabilities.

In another aspect, the present invention is directed to a method of enabling a number of UEs to communicate with a public network and/or private network via the WLAN. Generally, the method includes steps of: receiving in the WLAN call information to or from one of the number of UEs; providing subscriber identification and security information for the UE to an authentication server; and coupling the UE to the public network or private network over the WLAN.

Preferably, the communication between the UEs and the public cellular network facilitated by the WLAN includes voice communication. More preferably, the UE further includes computer program necessary to access or control supplementary services and/or value added services provided by the public network or private network, and the method further includes the step of controlling such supplementary services and/or value added services.

In one embodiment, the UE further includes a memory system having subscriber identification and security information stored therein, and the step of providing subscriber identification and security information for the UE to the authentication server is accomplished by providing subscriber identification and security information associated from the memory system. Alternatively, the UE further includes or is coupled to a card holder/reader holding a number of GSM-type SIM cards or 3G-type USIM cards, and the step of providing subscriber identification and security information for the UE to the public cellular network involves reading subscriber identification and security information stored in one of the cards held in the card holder/reader, which may be public network or private network subscription identifiers, or a combination of both public and private subscription data.

The communication system and method of the present invention is particularly useful in public cellular network including a GSM network coupled to a PSTN and/or a 3G-network coupled to a GSM network, to the PSTN and/or to the Internet. The communication system and method provide a means for coupling an 802.11 network coupled to the GSM network and the 3G-network to facilitate communication between a number of UEs and the public cellular network. Generally, the communication system includes means for authenticating and authorizing access to the system. The means for authenticating and authorizing access can include a RADIUS system or server coupled to the communication system through a VLR/RADIUS interface.

BRIEF DESCRIPTION OF THE FIGURES

These and various other features and advantages of the present invention will be apparent upon reading of the following detailed description in conjunction with the accompanying drawings, where:

FIG. **1**A is a block diagram of a communication system including a community Wireless Local Area Network (WLAN) according to an embodiment of the present invention;

FIG. **1**B is a block diagram of an alternative embodiment of the communication system of FIG. **1**A;

FIG. **1**C is a block diagram of another alternative embodiment of the communication system of FIG. **1**A;

FIG. **2** is a block diagram of a Centralized Base Transceiver Station (CBTS) of a community WLAN according to an embodiment of the present invention;

FIG. **3** is a block diagram of one of a plurality of Remote Transceiver Stations (RTSs) of a community WLAN according to an embodiment of the present invention;

FIG. **4** is a flowchart showing an embodiment of a process according to the present invention for providing voice and data communication between a plurality of User Equipment terminals (UEs) and a public network via a community WLAN;

FIG. **5** is a block diagram of a communication system according to an embodiment of the present invention having a private network including a wireless local area network (WLAN) coupled to a private cellular network and a private branch exchange, and a public network having a public global system for mobile communications (GSM) network and a public third□generation mobile communications (3G) network;

FIG. **6** is a block diagram of a communication system including a HiperLAN, HiperMAN, and 802.11 WLANs coupled to a private cellular network and a public network, and a Remote Authentication Dial In User Service (RADIUS) server coupling the WLAN to public and private home location registries (HLRs) according to an embodiment of the present invention;

FIG. **7** is a block diagram of a portion of the communication system of FIG. **6** illustrating the coupling of the RADIUS server to an access point, a user equipment terminal (UE), and the private HLR, according to an embodiment of the present invention;

FIG. **8** is a block diagram of a communication system including an 802.11 WLAN coupled to a private cellular network and a public network, and a RADIUS server according to an embodiment of the present invention;

FIG. **9** is a flowchart showing an embodiment of a process for enabling UEs to communicate with a private cellular network and a public network via a WLAN according to an embodiment of the present invention;

FIG. **10** is a block diagram of a communication system including a corporate LAN coupled to the public network through a WLAN according to an embodiment of the present invention;

FIG. **11** is a block diagram of an alternative embodiment of the communication system of FIG. **10**, having multiple RADIUS servers, authentication servers and clients according to the present invention;

FIG. **12** is a block diagram of an embodiment of a communication system having distributed private HLR and authentication server according to the present invention for enabling roaming of UEs;

FIG. **13** is a block diagram of yet another embodiment of a communication system including multiple corporate LANs according to the present invention;

FIG. **14** is a block diagram showing communication routing in a communication system including a WLAN and a RADIUS server according to the present invention; and

FIG. **15** is a block diagram showing an embodiment of architecture of a communication system according to the present invention.

DETAILED DESCRIPTION

The present invention is directed to a communication system and method for providing high capacity voice and high speed data communication between a number of user equipment terminals (UEs) and a public network via a communication system including a community Wireless Local Area Network (WLAN).

A communication system according to the present invention will now be described with reference to FIG. **1**A. FIG. **1**A is an exemplary block diagram of a communication system having a community WLAN to couple a number of user equipment terminals (UEs) to a public network according to an embodiment of the present invention. For purposes of

clarity, many of the details of communication systems and in particular of public networks that are widely known and are not relevant to the present invention have been omitted.

Referring to FIG. **1**A, the inventive communication system **100** includes a community WLAN **102** to provide access for a number of UEs **104** at a number of different building or sites **106** to a public network **108** including a public switched telephone network (PSTN **110**) and the Internet **112**.

Generally, the community WLAN **102** includes a centralized base transceiver station (CBTS **114**) coupled the public network via a landline or trunk **116**, such as an E1 or T1 trunk. The CBTS **114** also couples via a radio link to a number of remote transceiver stations (RTS **118**), generally one RTS permanently installed or fixed at each site **106**, each of which in turn couples to a number of UEs **104**, such as telephones **120**, fax machines **122** and computers **124**, to provide access to the public network **108** for voice or data communication. Each of the UEs **104** within a particular site **106** can be directly connected to the RTS **118** through a dedicated connection, or can be connected through a local area network (LAN **126**), such as an Ethernet, 100Base T, Fast Ethernet or Gigabit Ethernet, at the site.

In a preferred embodiment, the community WLAN **102** further includes a private home location registry/authentication server (HLR/AuC **128**) coupled to the CBTS **114** for recording and storing information relating to users or subscribers of the community WLAN. In operation, a RTS **118** or a UE **104** first introduced into an area served by the community WLAN **102** must provide authentication or authorization information to the HLR/AuC **128**. Generally, the authentication/authorization is provided in a manner similar to that of a Global Systems for Mobile communication (GSM) mobile station in a conventional GSM wireless network. There are several are several ways of accomplishing this: (i) each UE **104** can be provided with a subscriber identity module (SIM) cards similar to those cards commonly found in GSM mobile stations; (ii) each RTS **118** can be provided with a number of SIM cards which it can associate with the UEs **104** on a permanent or temporary basis; or (iii) each RTS can be coupled to a memory system in which is stored subscriber identification and security information that constitutes a virtual SIM (VSIM), described in greater detail in commonly assigned, co-pending U.S. patent application Ser. No. 10/002,551, which is incorporated herein by reference.

Use of the HLR/AuC **128** and SIMs enables generation and recording of call detail records (CDRs) for billing purposes, facilitates incoming communication from the public network **108**, and allows communication between UEs **104** at different sites **106** with the community WLAN **102** service area.

Optionally, the community WLAN **102** also include a visitor location registry (VLR) (not shown) to maintain subscriber information for visitors or roamers to the cell or area served by the community WLAN.

FIG. **1**B shows an alternative embodiment of the communication system **100** of FIG. **1**A, in which the CBTS **114** is coupled to the PSTN **110** and the Internet **112** through a public network **108** further comprising a public wireless network including a base station controller (BSC **130**) and a mobile switching center (MSC **132**). This embodiment, may be particularly useful in under served areas or communities in which a demand for communication services has outstripped the capacity of an existing wireless or wired communication system (not shown).

FIG. **1**C shows another alternative embodiment of the communication system **100** of FIG. **1**A, in which the CBTS **114** is coupled to the PSTN **110** and the Internet **112** through a satellite radio link via a satellite **134**. This embodiment, may be particularly useful in areas or communities hitherto unserved by conventional wireless or wired communication s systems (not shown).

The major components of the community WLAN **102**, that is the CBTS **114** and the RTSs **118**, will now be described in greater detail with reference to FIGS. **2** and **3**.

Referring to FIG. **2**, preferably the CBTS **114** is a complete stand-alone Network-In-a-Box (NIB), such as a WAVEXpress NIB platform, commercially available from Interwave Communications, of Menlo Park, Calif. Generally, the CBTS **114** includes within a single enclosure **136**: (i) a power supply **138**; (ii) a number of plug-in-modules or cards **140**, including a number of radio frequency (RF) transceivers for communicating with the RTSs **118**; (iii) an RF combiner **142** for combining signals to and/or from the multiple transceivers; (iv) an RF power amplifier **144** for amplifying received and/or transmitted signals; and (v) an antenna **146**. Preferably, the cards **140** include at least one GSM/GPRS transceiver **148** capable of providing data communication between the public network **108** and the UEs **104** using GSM standard or technology. More preferably, the cards **140** also include at least one WLAN transceiver **150** capable of capable of providing data communication to the UEs **104** using an open standard protocol, such as the HIgh Performance Local Area Network (HiperLAN/1) standard, the HiperLAN/2 standard, or an Institute of Electrical and Electronics Engineers 802.11 (IEEE 802.11) standard. Most preferably, both the GSM/GPRS transceiver **148** and the WLAN transceiver **150** are capable of non-line of sight (NLOS) operation. That is they are capable of communicating with RTSs **118** that are obscured or shielded from the CBTS **114** by intervening vegetation, buildings or terrain.

In addition, the cards **140** can include a number of cards or module for interfacing with the HLR/AuC **128**, and the trunk **116** to connecting to the public network **108**. For example, the cards **140** can include an E1 card, T1 card or an ICP card.

Optionally, in accordance with another aspect of the present invention, the CBTS **114** further includes a frequency converter **152** to enable the CBTS to communicate with the RTSs **118** using the GSM standard with a signal having a frequency up-converted from a frequency band conventionally used in GSM systems or networks, thereby tapping into an unused or underused portion of the radio spectrum and increasing capacity of the community WLAN **102** and avoiding restrictions on transmission rates. Preferably, the

frequency of the signal is up-converted to a frequency band within the specification developed by the European Telecommunications Standards Institute (ETSI) for GSM communication. More preferably, the frequency of the signal is up-converted to a frequency band of at least about 3.5 Ghz.

Referring to FIG. **3**, the RTSs **118** generally include: (i) a power supply **151**; (ii) at least one GSM/GPRS transceiver **154**; (iii) a WLAN transceiver **156**; (iv) a frequency converter **158**; and (v) an antenna **159**. Additionally, depending on the UEs **104** coupled to a particular RTS **118** and the manner in which they are coupled, the RTS can further include a number of interfaces or modules (not shown) for interfacing with the UEs. Such interfaces can include for example, TCP/IP interfaces, ethernet interfaces and SCSI interfaces.

A process or method for operating communication system **100** according to an embodiment of the present invention will now be described with reference to FIG. **4**. FIG. **4** is a flowchart showing an embodiment of a method for providing voice and data communication between the UEs **104** and the public network **108** via the community WLAN **102**. In the method, call information, from either one of the UEs **104** or from the public network, is received in the community

WLAN **102** (step **160**). Subscriber identification and security information for the UE **104** is provided to the community WLAN **102** by the UE and verified by the HLR/AuC **128** (step **162**). A frequency of signals generated in at least one of the transceivers in the CBTS **114** and the RTS **118** is up-converted to couple the CBTS to the RTS via a radio signal at a frequency above the standard GSM frequency band (step **164**), and the UE **104** is coupled to the public network **108** over the community WLAN **102** (step **166**).

In another aspect, the invention is directed to a communication system and method for enabling UEs associated with a WLAN to communicate with a public network.

A communication system according to the present invention will now be described with reference to FIG. **5**. FIG. **5** is an exemplary block diagram of a communication system having a WLAN coupled to a public network including a GSM network and a 3G network according to an embodiment of the present invention. For purposes of clarity, many of the details of communication systems and in particular of GSM networks and 3G-networks that are widely known and are not relevant to the present invention have been omitted.

Referring to FIG. **5**, the communication system **200** generally comprises a public core network or public network **202** including a public cellular network **204** with connections to a PSTN **206** and the Internet **208**. The public cellular network **204** can include a GSM **210** network for communicating with public MSs **212** and a 3G-network **214**, such as a 3G-UMTS (universal mobile telecommunications system), for communicating with public UEs **216**. The public cellular network **204** typically further includes a GPRS/3G-GPRS network **218**.

The communication system **200** further includes a private network **220** with a private cellular network **222** for communicating with private MS **226**, a WLAN **228** for communicating with private transceivers or UEs **230**, and, optionally, a PBX **232** for communicating with PBX telephones **234**. In one embodiment, the private cellular network **222** includes at least one WAVEXchange™ (WXC) or a Network-In-A-Box™ (NIB **224**) commercially available from interWAVE Communications Inc., of Menlo Park, Calif. A WXC generally includes a MSC, a built-in VLR/HLR. The NIB **224** includes a MSC, a BSC and a BTS in a single enclosure. The private cellular network **220** is coupled to the GSM network **210**, the GPRS network **218**, and the 3G-network **214** of the public cellular network **204** through a number or interface functions or links, described in more detail below.

In accordance with the present invention, the WLAN **228** is coupled to the public network **202** through the NIB **224** and is adapted to enable voice and data communication between the private UEs **230** and the private mobile stations **226**, public mobile stations **212**, public UEs **216**, PBX telephones **234**, and telephones (not shown) coupled to the PSTN **206** and/or the Internet **208**. Access points (not shown in this figure) of the WLAN **228** can be coupled to the NIB **224** through a wired local area network (LAN **229**), such as an Ethernet, 100Base T, Fast Ethernet or Gigabit Ethernet, or through a wireless or radio-link (not shown). One advantage of the communication system **200** of the present invention is the ability to enable communication between the public network **202** and less expensive, low-power, unregulated private UEs **230** while providing substantially the same functions and services available from much more expensive radios, MSs **212** or UEs **216** of the public cellular network **204** and/or private cellular network **222**.

It will be understood, that the communication system **200** can include a number of private cellular networks **222**, each with an associated WLAN **228**, and each linked by a private wide area network (PWAN) (not shown) to provide wireless or cellular type communication via a WLAN over an extended service area. This embodiment provides the further advantages of the ability to avoid tolls and maintain ownership and control of information transmitted between different sites of an enterprise linked by the PWAN.

In another embodiment, the private UE **230** further includes coupled thereto a subscriber identity module (SIM **236**) having an algorithm and a key to support authentication and encryption necessary to enable or facilitate communication with the public network. **202** and/or private cellular network **224**. In one version of this embodiment, each private UE **230** includes a card holder/reader (not shown in this figure) and one or more GSM-type SIM cards or 3G-type USIM cards (not shown) held in the card holder/reader, each SIM card subscriber identification and security information stored therein for one or more user profiles, which may include public network or private network subscription identifiers, or a combination of both public and private subscription data/identifiers. Alternatively, the SIM **236** encompasses subscriber identification and security information stored in a memory system (not shown) of the private UE **230**. This latter version has the advantage of enabling the SIM **236** to be downloaded from the WLAN **228** along with computer software or programs that enable the private UE **230** to emulate or function as a communication terminal. Such emulator programs are described in greater detail in commonly assigned, co-pending U.S. patent application Ser. No. 10/155,931, which is incorporated herein by reference.

In yet another embodiment, the private network **220** further includes an identity module **238** coupled to the NIB **224**, and having at least one identifier or virtual identifier stored therein that can be permanently or temporarily associated with one or more private UEs **230**, to enable the private UE to communicate with the public network **102** and/or the private cellular network **222** via the WLAN **228**. Identity modules and virtual identifiers and described in greater detail in commonly assigned, co-pending U.S. patent application Ser. No. 10/002,551, filed Nov. 1, 2001, which is incorporated herein by reference. Generally, the virtual identifiers include algorithms and a key to support authentication and encryption necessary to facilitate communication with the public network **102** or private cellular network **222**. In one version of this embodiment, the identity module **238** includes subscriber identification and security information stored in a memory system (not shown) coupled to the NIB **224**. Alternatively, the identity module **138** includes a card holder/reader (not shown), as described above, and the virtual identifiers include one or more GSM-type SIM cards or 3G-type USIM cards held in the card holder/reader), as described above.

The virtual identifiers can be associated with the private UEs **230** on a one-to-one basis; on a one-to-many basis; or on a many-to-many basis in which the virtual identifiers are maintained as a pool of virtual identifiers that are associated temporarily with a private UE on an as needed basis. Alternatively, the virtual identifiers can be associated with the private UEs **230** on a many-to-one basis to provide a single private UE with multiple different user profiles that can be selected by a user for record or billing purposes. For example, a user placing a call from a private UE **130** over the public cellular network **204** could enter a first code selecting a first user profile when the call is for business purposes, and a second when the call is for private purposes. In addition, the communication system **200** or the user can select a GSM-type SIM identifier (virtual SIM) when the communication is over

the GSM network **210**, and a 3G-type USIM identifier (virtual USIM) when it is connected or routed over the 3G network **214**.

Preferably, the SIM **234** or identity module **238**, and programs or software in the private UE **230** that allow it to emulate a communication terminal, are also adapted to enable the private UE to control or access supplementary and/or value added services provided by the private cellular network **222** or public network **202** service provider. Supplementary services can include, for example, Voice Group Call Service; Voice Broadcast Service; Service definition Line Identification Supplementary Services; Call Forwarding Supplementary Services; Call Waiting and Call Hold Supplementary Services; multiparty Supplementary Services including call conferencing; Closed User Group Supplementary Services, Advice of Charge Supplementary Services; Call Barring Supplementary Services; Unstructured Supplementary Service Data; Explicit Call Transfer; Completion of Calls to Busy Subscriber; Short Message Service; and Follow Me. Value added services include, for example, e-mail, calendar, and wireless inventory, etcetera.

The WLAN **228** can include one or more separate and discrete networks each using one of a number of different protocols including IEEE 802.11 standards (802.11), and ETSI standards for BRAN, such HiperLAN or HiperMAN. These standards serve to ensure the interoperability of wireless communications equipment operating in the same spectrum but manufactured by different manufacturers. In particular, BRAN is a set of communication standards for Broadband Radio Access Networks developed by ETSI in response to growing market pressure for low-cost, high capacity radio link, and is used chiefly in European countries. BRAN provides broadband wireless access at a rate of 25 Mbit/s or more to networks or WLANs operating in either licensed or license exempt spectrum. IEEE 802.11 standards are a similar set of WLAN standards. There are two types of HiperLAN: (i) HiperLAN/1, which provides communications at up to about 20 Megabytes Per Second (Mbps) in the 5 GHz band; and (ii) HiperLAN/2, which provides communications at up to 54 Mbps in the same band. HiperMAN is a similar standard used for systems serving a metropolitan area. Although, HiperMAN is generally used in larger communication systems that could be defined as a wireless metropolitan area network, rather than a WLAN, it will be appreciated that the principles of the present invention can be applied to such a communication system. Accordingly, it will be understood that as used herein the term WLAN refers to both wireless local area networks and a wireless metropolitan area networks. IEEE 802.11 refers to a line of related specifications or standards developed by the IEEE for wireless communication, including 802.11, 802.11a, 802.11b, 802.11g and 802.1x. 802.11 is similar to HiperLAN and applies to WLANs having from 1 or 2 Mbps transmission rates in the 2.4 GHz band using either frequency hopping spread spectrum (FHSS) or direct sequence spread spectrum (DSSS). 802.11a is an extension to 802.11 that applies to WLANs, provides up to 54 Mbps in the 5 GHz band, and uses an orthogonal frequency division multiplexing encoding scheme rather than FHSS or DSSS. 802.11b, also known as 802.11 High Rate or WiFi, is another extension that provides up to 11 Mbps transmission rates in the 2.4 GHz band, allowing wireless functionality comparable to Ethernet. Thus, 802.11b is particularly useful interfacing with or coupling to GPRS systems according to the present invention for wireless transmission of data. 802.11g applies to WLANs and provides greater than 20 Mbps in the 2.4 GHz band.

In still another embodiment, the WLAN **228** is further coupled to the Internet **208** through a firewall **240**, to enable the private UE **230** to transfer video and audio data, and/or to transfer or download large files or attachments to or from other data processing systems or servers. Preferably, the private UE **230** is adapted to enable a user to simultaneously carry on communication, for example voice communication, with a telephone or terminal in the private cellular network **222** or public network **202**, and communication, for example data communication, with a terminal coupled to the Internet **208**. More preferably, the private UE **230** includes a computer program to simultaneously enable voice over an internet protocol network communication (VoIP), with a telephone or terminal (not shown) coupled to the Internet **208**, WLAN **228**, LAN **229** or another IP network. The VoIP program can include a standard VoIP program native to the private UE **230**, which comes standard on many computers and portable computers, or a VoIP program included with computer software or programs downloaded from the WLAN **228**, such as the virtual SIM or emulator program, as described above.

In still another embodiment, computers or terminals **242** coupled to the NIB **224**, through the LAN **229**, are also adapted to communicate voice and data with telephones or terminals in the public cellular network **204** and/or private cellular network **222** via the NIB **224** and the interface functions or links from the NIB to the public and private cellular networks **204**, **222**.

An embodiment of the communication system **200** of the present invention will now be described in greater detail with reference to FIG. **6**. Referring to FIG. **6**, the public network **202** includes a public HLR/VLR **244** coupled to the GSM network **210** and the 3G-network **214**. The public HLR of the HLR/VLR **244**, can include, for example, a home location register and/or a home subscription sever HSS, and records and stores information relating to users or subscribers of the public network. The VLR of the HLR/VLR **244** maintains subscriber information for visitors or roamers to the cells or area served by the public cellular network **204**. Generally, the HLR/VLR **244** also includes an authentication and accounting server or function (not shown) used by many service providers to authorize access to the public GSM network **210** and/or the public 3G-network **214**.

The GSM network **210** includes a gateway mobile services switching center (GMSC **246**) coupled to the PSTN **206** through a landline or trunk **248**, and to the HLR/VLR **244** through a C interface or link **250**. The GMSC **246** is a gateway switching center or exchange that directs or routes calls from the PSTN **206** to the MSs **212**, and from the MS to the PSTN. A third generation mobile services switching center (3G-MSC **252**) coupled to the HLR **244** through a D interface or link **254** provides switching services and co-ordination between mobile stations **212** in the GSM network **210** and public UEs **216** in the 3G network **214**. Optionally, the 3G-MSC **252** also include another or second VLR to maintain subscriber information for visitors or roamers to the cells or area served by the 3G-MSC. The 3G-MSC **252** also couples to one or more MSCs **256**, only one of which is shown, through an E interface or link **258**. As with the 3G-MSC **252**, the MSC **256** can also include a VLR to maintain subscriber information for visitors or roamers to the cell or area served by the MSC. The MSC **256** in turn couples through an A interface or link **260** to one or more BSC **262**, each of which controls one or more BTS **264** through an Abis interface or link **266**. The MSC **156** also couples to the private cellular network **222** through a private A-link intelligent multiplexor interface function or link (PALIM **268**). PALIM functions or links are described detail in commonly assigned U.S. Pat.

Nos. 5,818,824, 5,734,699, 5,999,813 and 6,212,395, all of which are incorporated herein by reference.

In the embodiment shown, the 3G-network **214** includes a third-generation gateway GPRS support node (3G-GGSN **270**) coupled to the Internet **208** through a Gi interface or link **272**, and to the HLR **244** through a Gc interface or link **274**. The 3G-GGSN **270** provides an interface between the 3G cellular network **214** and an IP network, such as the Internet **208**. A third generation serving GPRS support node (3G-SGSN **276**) coupled to the HLR **244** through a Gr interface or link **278** and to the 3G-MSC **252** through a Gi link **280**, handles data traffic in an area served by the 3G cellular network **214**. Optionally, the 3G-SGSN **276** is further coupled to a local, second generation (2G) or GPRS SGSN **282** through a Gn interface or link **284** to provide an interface between the 3G cellular network **214** and the WLAN **228**. The 3G-SGSN **276** also couples to one or more 3G radio network controllers (3G-RNC **286**), only one of which is shown, through an Iu-PS interface or link **288**. Each 3G-RNC **286** controls one or more Node Bs **190** through an Iub interface or link **292**. The 3G-RNC **286** also couples to the 3G-MSC **252** through an Iu-CS interface or link **294** to provide communication between the public UEs **216** and the MSs **212** of the GSM network **210** or telephones (not shown) connected to the PSTN **206**.

As shown in FIG. **6**, and as noted above, the WLAN **228** can include one or more separate and discrete networks or access points **228**A, **228**B, **228**C, each using a number of different protocols including HiperLAN, HiperMAN and 802.11, as described above. The particular network or protocol used in the WLAN **228** can be selected based on factors including cost, desired bandwidth or bit-rate, or required range, frequency and regulatory limitations. For example, a communication system **200** in Europe or other states or nations adopting the HiperLAN standards might use the HiperLAN/1 or HiperLAN/2 standard depending on the desired bit-rate, while systems in the United States might use one of the 802.11 standards. Communication systems **100** serving a metropolitan area or requiring a higher capacity or bandwidth might use the HiperMAN standard.

As also shown in FIG. **6**, the WLAN **228** can be coupled to the Internet **208** and to a number of different components in the GSM network **210** and/or the 3G-network **214**. For example, in the 3G-network **214** the WLAN **228** can be coupled to the 3G-GGSN **270** through the NIB **224** and via an IuPSWLAN interface or link **296**, the GPRS SGSN **282** via an IuPSWLAN interface or link **298**, the 3G-RNC **186** via an IubisWLAN interface or link **300**, and/or to one or more Node Bs **290** via a NodeBWLAN interface or link **302**. In the GSM network **110** the WLAN **228** can be coupled to the BTS **268** via a BTSWLAN interface or link **304**, to the BSC **262** via an AbisWLAN interface or link **306**, and/or to the MSC **256** via an AWLAN interface or link **308**. In addition, the WLAN **228** can be coupled to the MSC **256** through the NIB **224** and over the PALIM link **268**, described above.

It will be understood that where the WLAN **228** includes multiple separate networks or access points **228**A, **228**B, **228**C, which may or may not use different protocols, each of the separate access points can be coupled through the NIB **224** to different components in the public network **202**. For example, it might be desirable to couple an access point **228**C using an 802.11b standard for high speed transmission of data to the GPRS SGSN **282**.

In yet another embodiment, the communication system **200** further includes a Remote Authentication Dial In User Service (RADIUS) system **310**, having a RADIUS authentication and accounting gateway or server **312**. The RADIUS system can be combined with the NIB **224**, as shown, or can comprise a standalone RADIUS server **312** separate and distinct from the NIB. RADIUS is an authentication and accounting system used by many service providers to authorize access to a communication system. Though not an official standard, the RADIUS specification is maintained by a working group of the Internet Engineering Task Force (IETF). Generally, RADIUS requires users to enter a username and password, which is passed to the RADIUS server **312** to check that the information is correct, and authorize access to the communication system **200**. A separate authentication/authorization server (not shown in this figure) within the RADIUS system **310** or coupled to the RADIUS server **312** provides or supports roaming capabilities for the private UEs **230** among the plurality of access points **228**A, **228**B, **228**C and the public cellular network **204**. Additionally, the RADIUS server **312** receives accounting packets or call detail records (CDRs) generated by the different access points **228**A, **228**B, **228**C, and forwards these accounting packets to a billing server (not shown) through a RADIUS proxy interface (not shown) to bill telecommunications charges to the appropriate parties.

Preferably, the RADIUS server **312** is coupled via a VRAD **314** to the public HLR/VLR **244** and, to a private HLR (PHLR **316**) and/or private VLR (PVLR **318**). The VRAD **314**, private HLR **316** and private VLR **318** can be combined with the RADIUS system **310**, as shown, or can comprise a standalone server separate and distinct from the RADIUS system. For example the VRAD **314**, private HLR **316** and private VLR **318** can be combined with the NIB **224**, and the system **310** or server **312** can be separate and distinct from the NIB **224**, as described above. The private HLR **316** is stores information on UEs **230** registered or subscribing to the communication system **200**, and more particularly to the WLAN **228** and/or the private cellular network **222**. The private VLR **318** is capable of temporarily storing information on subscribers or UEs **230** considered as roaming within the service area of the WLAN **228**. The VRAD **314** is a VLR-RADIUS interface, and includes an internal integral VLR **320** and an extensible authentication protocol (EAP) interface **322** for signaling to the public HLR/VLR **244** and the private HLR **316**. The RADIUS server **312** couples to the public HLR/VLR **244** via an EAP over RADIUS link (EAP/RADIUS Link **324**). The RADIUS server **312** further couples to the public HLR/VLR **144** via the LAN **229** and the Internet **208** over an EAP over SIM link (not shown in this figure) for transmission of data. The RADIUS server **312** couples to one or more access points **228**A, **228**B, **228**C, via the NIB **224** and the LAN **229**.

The RADIUS server **312** supports roaming of private UEs **230** based on a RADIUS/DIAMETER roaming model along with traditional GSM subscriber roaming based upon the mobile application part (MAP) standard for address registration of roamers and inter-system hand-off procedures. Part of the SS7 protocol used in GSM, MAP standardizes address registration of roamers and inter-system hand-off procedures. In case of a communication system **200** having a number of private cellular networks **222**, each with an associated WLAN **228** and linked by a PWAN (not shown), the RADIUS server **312** can act as a proxy to forward an authentication request via the VRAD **314** to a single, central public HLR/VLR **244** and/or a single, central private HLR **316** Alternatively, where the communication system **100** includes either a distributed public HLR/VLR **244** and/or a distributed private HLR **316**, the RADIUS server **312** routes an interpretation of either a username or a user identity provided in the authentication procedure, to the appropriate public or private HLR. In one version of this embodiment, the RADIUS server **312** is

enhanced to contact the appropriate or controlling public or private HLR **244**, **314**, either by: (i) querying a standalone Central Address Table server (not shown) coupled thereto to match International Mobile Subscriber Identity (IMSI) information provided in the authentication procedure to the corresponding HLR; or (ii) using a configuration table that matches the IMSI ranges with the appropriate or controlling public or private HLR. This last model works well if IMSI partitioning is implicitly or explicitly enabled for subscriber provisioning across multiple public or private HLR **244**, **316**.

Moreover, because the location of the private UEs **230** become known in the RADIUS server **312** and/or the VLR **320** during the authentication or registration process, the communication system **200** of the present invention has the ability to build or provide services based on location or location based services.

Coupling between the private UEs **230** and the RADIUS server **312**, and between the RADIUS server and the public or private HLR **244**, **316**, can be seen more clearly in FIG. **7**. Referring to FIG. **7**, the access point **228**C couples to the RADIUS server **312** via the LAN **229** or via a separate radio link (not shown) and via an EAP/SIM Link **326**, and to the private HLR **316** via EAP/RADIUS link **324**. In an alternative to the embodiment shown in FIG. **6**, the authentication/authorization can be handled by a separate authentication/authorization server **328** coupled to the private HLR **316** via a proprietary link **330**, as shown. As indicated previously and as shown in FIG. **7**, the private UE **230** must provide authentication information in a manner similar to a GSM MS **212**. Generally, this there are three different ways or methods of accomplishing this, including: (i) use of a universal serial bus (USB) adapter **332** that enables the private UE **230** to communicate with a GSM-type SIM card or a 3G-type USIM card via a USB bus **334**; (ii) use of a PCMCIA adapter (not shown) that enables the private UE **230** to communicate directly with a GSM-type SIM card; or (iii) use of a virtual SIM as described briefly above and in greater detail in U.S. patent application Ser. No. 10/002,551.

A preferred embodiment in which the WLAN **128** includes an 802.11 network will now be described with reference to FIG. **8**. Referring to FIG. **8**, the public cellular network **104** includes a GSM network **110** and a 3G-network **314**, as described above. The WLAN **228** includes an 802.11 network having one or more 802.11 access points **336** (only one of which is shown), and adapted in accordance with the present invention to couple communication between the private UEs **230** and the public network **202** and/or private cellular network **222**. The private UEs **230** can include voice communication devices **230**A, such as wireless telephones or mobile stations, and data communication devices **230**C, such as pagers, facsimile machines, portable computers, network access appliances and personal digital assistants (PDAs).

In the 3G-network **214** the 802.11 access point **228**C is coupled to the 3G-GGSN **270** through the NIB **224** and via an IuPS802.11 interface or link **338**, the GPRS SGSN **282** through the NIB and via an IuPS802.11 interface or link **340**, the 3G-RNC **286** through the NIB **224** and via an Iubis802.11 interface or link **342**, and/or to one or more Node Bs **290** through the NIB **224** and via a NodeB802.11 interface or link **344** In the GSM network **210** the 802.11 access point **228**C can be coupled to the BTS **268** through the NIB **224** and via a BTS802.11 interface or link **346**, to the BSC **262** through the NIB **224** and via an Abis802.11 interface or link **348**, and/or to the MSC **226** through the NIB **224** and via an A802.11 interface or link **350** In addition, the WLAN **228** can be coupled to the MSC **256** through the NIB **224** and over the PALIM link **268**, described above.

A method or process for operating communication system **100** according to an embodiment of the present invention will now be described with reference to FIG. **9**. FIG. **9** is a flowchart showing steps of a method for facilitating communication between private UEs **230** and the public network **202** via a WLAN **228**. In the method, call information from or to one of a number of private UEs **230** is received in the WLAN **228** (step **352**). Subscriber identification and security information for the private UE **230** is provided to the RADIUS system **310** (step **354**), and the private UE is coupled to the public network over the WLAN (step **356**). In one preferred embodiment, the communication between the private UEs **230** and the public network **202** is voice communication, and the method further includes the step of controlling or accessing supplementary services for the UE provided by the private cellular network **222** or public network **202** service provider (step **358**).

As noted above, the subscriber identification and security information can be provided from a 3G-type USIM or GSM-type SIM **236** associated with each private UE **230**, or from an identity module **238** in the private cellular network **222**. Moreover, where the identity module **238** of the communication system **200** includes a memory system (not shown) having subscriber identification and security information stored therein, and the step of providing subscriber identification and security information for the private UE **230** to the RADIUS system **310**, step **354**, is accomplished by providing subscriber identification and security information associated with the private UE from the memory system. Alternatively, where the communication system **200** further includes a card holder/reader holding a number of cards associated with the private UEs **232**, and step **354** involves reading subscriber identification and security information stored in one of the number of cards held in the card holder/reader.

Certain exemplary embodiments of a communication system according to the present invention, their uses and advantages will now be described with reference to FIGS. **10** to **16**.

FIG. **10** is a block diagram of an embodiment of a communication system **200** having a private corporate LAN **360** including a WLAN **228** according to the present invention, coupled to a public cellular network **204**, such as a home public land mobile network (HPLMN), a RADIUS system **310** and an authentication server **328**. Generally in this embodiment, the corporate LAN **360** includes, in addition to the WLAN **228**, a hub or router **362** coupled through a wired LAN **329** to a number of access points **228**A, **228**B, **228**C, in the WLAN and to other terminals, such as computer terminals **342** or servers **364**. As described above, the RADIUS system **310** includes a RADIUS server or gateway for authorizing access to the communication system **200**, and a private HLR (not shown in this figure). The authentication server **328** provides or supports roaming capabilities for the private UEs **230** among the plurality of access points **328**A, **328**B, **228**C and the public cellular network **204**. The RADIUS system **310** communicates with the authentication server **328** to obtain user credentials and a ciphering key to enable true GSM-type authentication. Preferably, to provide sufficient level of security in the communication system **200** the authentication server **328** uses a GSM A3/A8 algorithm for key generation. In accordance with the present invention, users of UEs **230** can access data in the servers **364**, while simultaneously communicating with one another or with other terminals or telephones coupled to the public cellular network **204**. This embodiment provides a central private HLR (not shown in this figure) in the RADIUS system **310** to centralize operation and management (OAM) functions, and to minimize the changes necessary to the WLAN **228** to access or control supplementary or value added services and commu-

nication with the public cellular network **204** for the private UEs **230**. Preferably, the private HLR is able to handle or serve at least about 100,000 mobile stations, UEs **230** or users, and the authentication server **328** at least about 200,000, making this embodiment particularly suitable for use in airports, hotels, convention centers, etcetera.

FIG. **11** is a block diagram of an alternative embodiment of the communication system of FIG. **10**, having a number of RADIUS systems **310**A, **310**B or private HLRs and authentication servers **328**A, **328**B, and NIBs **224**A, **224**B, linked by a PWAN **366** for distributing HLR registration and authentication loads. This embodiment is particularly suitable for use in enterprises operating a number of different WLANs **228** or corporate LANs **360**A, **360**B, at a number of different sites. For example, a chain of hotels, recreational parks or business centers owned and/or operated by a single enterprise.

FIG. **12** is a block diagram of yet another alternative embodiment of the communication system of FIG. **10** illustrating roaming of 802.11 or GPRS enabled UEs **230** between a coupled to a home private network **220**B, and a visited private network **220**B coupled to a visited public cellular network **204**B or visited public land mobile network (VPLMN). Referring to FIG. **12** a visiting private UE **230**A to an area served by the corporate LAN **260** is able to communicate with another UE **2130**B home private network **220**A and terminals or servers **364** in the corporate LAN **360** and with terminals in the public network **202** through the local or visited public cellular network **204**B and the corporate LAN. To authenticate the UE **230**A and authorize access to the communication system **200**, RADIUS messages are passed from the visiting UE **230**A through the router **360** to a NIB (not shown in this figure) or a RADIUS gateway or server **312** in the visited private network **220**B. The RADIUS server **312** determines subscriber information for the visiting UE **230**A is not stored in private HLR **216**B but in a private HLR **316**A in the home private network **220**A. RADIUS messages are then passed from the RADIUS server **312** over the PWAN **366** to the private HLR **316**A and an authentication server **328**A in the home private network **220**A of the visiting UE **230**A. Note, in this embodiment each of the distributed private HLRs **316**A, **316**B, can be smaller, and able to handle fewer mobile stations, UEs **230** or users than the HLR in the embodiments described above.

FIG. **13** is a block diagram of yet another embodiment of a communication system **200** according to the present invention, which is particularly suitable for use in airports, hotels, convention centers, etcetera. In this embodiment, a private network or corporate LAN **360** including a RADIUS server **312**, a private HLR **316**, an authentication server **328**, a WLAN **228**, and a LAN **229** coupling to servers **364** and access points **228**A, **228**B, **228**C, of the WLAN are maintained at a first corporate site or location **368**. The private network **220** at the first location **368** is coupled through a router **362** to the Internet **208** and, through a PWAN **366** to additional private HLRs **316**A, **316**B and authentication servers **328**A, at additional corporate locations **370**. This embodiment provides a distributed HLR and authentication servers, while centralizing OAM functions within the PWAN **366**, and providing value added services for the private cellular network **222**, and minimizing the changes necessary to the corporate LAN **360** to enable communication with the public cellular network (not shown in this figure). Preferably, each of the smaller distributed HLRs **316**, **316**A, **316**B and authentication servers **328**, **328**A are able to handle or serve at least about 8,000 mobile stations, UEs **230** or users.

FIG. **14** is a block diagram showing communication routing in a communication system **200** including a WLAN **228** and RADIUS system according to the present invention. Referring to FIG. **14**, arrow **372** shows the data path for user data from a UE **230** to an IP network, such as the Internet **208**, through an access point **228**C of the WLAN **228**, LAN **229**, and a firewall **240**. In accordance with the present invention, the same or additional UEs **230** simultaneously couple to the public cellular network **204** or PLMN through the RADIUS system **310** as shown by arrows **374**, **376**, and **378**. In particular, arrows **374** and **376** show a signaling path over which RADIUS messages are passed to identify the UE **230** and authorize access to the communication system **200**. Arrow **378** shows the path of user data over which data, including voice, graphics or images, and other data is passed between the UE **230** and the public cellular network **204**.

FIG. **15** is a block diagram of yet another embodiment of a communication system **200** showing an architecture of the communication system according to the present invention. Referring to FIG. **15** the core element of the communication system **200** is the NIB **224**, which combines an MSC **396**, a GSM/GPRS radio **398**, a private HLR **316** and private VLR **318**. The MSC **396** couples to the GSM/GPRS radio **398** through an interface **400**, and to the private HLR **316** and private VLR **318** through a VRAD interface **322**. The NIB **224** couples to a WLAN access points **228**C through an EAP link, thereby enabling the NIB to full functional GSM/GPRS cellular capabilities as well as extending GSM/GPRS type security and roaming capabilities to UEs **230** over the WLAN **228**. WLAN clients or UEs **230** capable of accessing the services provided through the NIB **224**, generally include a LAN PC card **402** to enable wireless access, a GSM-type SIM **234**, a client software or driver **404** to enable the UE to emulate a communication terminal and/or to control supplementary service provided by the communication system **200**, and an underlying operating system **406**.

The NIB **224** couples to a network management center (NMC) or RADIUS server **312** through the VRAD **322**. In the embodiment shown, the RADIUS server **312** includes an operations maintenance center (OMC **408**), RADIUS proxy function **410**, and an underlying operating system **412**. The RADIUS server **312** also couples to the WLAN access points **228**C through an 802.11 over RADIUS link, thereby enabling the RADIUS server to authorize and control access to the communication system **200**.

The NIB **224** also couples to a subscriber management graphical user interface (SMGUI **414**) to allow management of the communication system **200** and the subscriber profiles maintained in the private HLR **316** and private VLR **318**. The SMGUI **414** generally includes a service configuration function **416** for management of communication system configuration, a service management function **418** for management of subscriber profiles, and an underlying operating system **420**.

The RADIUS server **312** couples via an IP network or link to other remote RADIUS servers **312**B, and through the remote RADIUS servers to other GSM networks or PLMN **204**. The RADIUS server **312** couples via an IP network or link to a billing server **422** or service. This particularly useful for forwarding billing information on roaming or visiting UEs **230**.

The WLAN access points **228**C are further coupled to an IP network, such as LAN **229**, and through the LAN to the Internet **208**, an enterprise network **424**, and various WLAN services **426**.

Some of the important aspects of the present invention will now be repeated to further emphasize their structure, function and advantages.

It will be appreciated that WLAN standards, such as IEEE 802.1X, HiperLAN/1 or HiperLAN/2, HiperMAN, and BRAN, can be used to derive authentication and encryption keys for use with any cipher, and can also be used to periodically refresh keys and re-authenticate so as to make sure that the keying material is fresh. These standards do not specify a single authentication method; rather they utilize Extensible Authentication Protocol (EAP) as its authentication framework. This allows WLAN enabled access points **228** to support a wide range of authentication methods, including certificate-based authentication, smartcards, token cards, one-time and passwords. Moreover, since switches and access points **228**A, **228**B, **228**C, act as a pass-through for EAP, new authentication methods can be added without the need to upgrade the switch or access point, by adding software on the host and back-end authentication server **328**.

A major advantage of using an WLAN based authentication scheme is that the access control capability is built into each access point **228**A, **228**B, **228**C. An 802.11 enabled access point **228**A, **228**B, **228**C, can directly communicate with a RADIUS system **310** or server **312** to authenticate a user or UE **230** and generate encryption key for the session. The access point **228**A, **228**B, **228**C, can also store billing records for the subscriber and transfer them to the RADIUS system **310** using the RADIUS accounting protocol. The WLAN **228** based approach can be used to provide access to the Internet **208** in both wired LANs **229** as well as WLANs **228** operated by a service provider. Also, the client part of the network can be greatly simplified by using authentication functions for WLAN **228** based on WLANs built into many operating systems, such as the Windows XP® operating system, commercially available from Microsoft, Inc.

Another advantage of a communication system **200** according to the present invention is that the cellular service provider or service provider needs only to install a limited number of WLAN-enabled access points **228**A, **228**B, **228**C, in the served areas, each access point directly communicating with a RADIUS system **310** or server **312**. The use of EAP and WLAN-standards provides the required security in message exchange between the access point **228**A, **228**B, **228**C, and the RADIUS system.

Yet another advantage is that EAP allows different authentication methods to be used by the authentication server **328** based upon configuration of the RADIUS system **310** and/or the authentication server. Thus, a cellular service provider can employ SIM based authentication to integrate 802.11 access information with a GSM user profile. A draft proposal outlining SIM based authentication using EAP, entitled EAP SIM authentication, is available from the Internet Engineering Task Force (IETF), and is incorporated herein by reference.

In one embodiment, an EAP interface **322** to a RADIUS server **312** is added to a VLR **320** in a NIB **224**. This will allow authentication credentials to be exchanged between the WLAN **228** client UE **230** and a private HLR **316** following a GSM based authentication, encapsulated in EAP. The private HLR **316** will also be able to supply the access point **228**A, **228**B, **228**C, with any user specific information, such as subscription profile, quality of service (QoS), etcetera, to enable any service differentiation.

In another embodiment, compact SIM card readers **332** which connect via a USB bus **334** to a UE **230**, such as a personal computer (PC) or a laptop computer, can be used to support for SIM based authentication at client end. For example, an obtain/write interface layer between a WLAN driver of a Windows® based computer and the SIM card reader **332** allows authentication credentials to be generated and exchanged between the SIM and the access point **228**A, **228**B, **228**C.

In still another embodiment, support for WLAN-session key generation can be accomplished using an algorithm similar to GSM ciphering key generation to ensure the WLAN solution offers a level of security close to that offered in GSM.

In yet another embodiment, inter-working capability between RADIUS based accounting and current GSM call data records or CDRs is accomplished by use of a separate accounting server (not shown). This accounting server receives the RADIUS accounting data from the access points **228**A, **228**B, **228**C, converts the data into GSM based CDRs, for example, based upon subscriber profile, and transfers it to the billing entity using file transfer protocol (FTP).

In another embodiment, the communication system **200** according to the present invention has the ability to support roaming of WLAN **228** UEs **230** based upon a RADIUS/DIAMETER roaming model along with traditional GSM subscriber roaming based upon MAP. Requirements for different UEs **230**, such as an 802.11 network access platform, include subscription to a WLAN service offered by a carrier. Generally, the user or subscriber would access the service provider's network through a WLAN enabled client device or UE **230**, such as a laptop computer. Preferably, the client computer's operating system includes WLAN support, either natively or through additional drivers or an emulator program downloaded from the service provider, as described above. Two known operating systems satisfying this requirement are Microsoft Windows 2000® and Microsoft Windows XP®.

The UE **230** could authenticate in way similar to that of a GSM mobile station. There are several feasible methods of achieving this. In one method the UE **230** will need an authentication driver to interface with a GSM-type SIM card **234**. This can be accomplished either through the use of a PCMCIA adapter or a USB adapter **332** that provides the ability for the UE **230** to communicate with the GSM-type SIM card **234**. A USB adapter **332** being more compact and reasonably priced than the PCMCIA adapter, it is the preferred interface. To emulate GSM authentication on the WLAN security framework, an EAP extension module or interface **322** is required. The EAP interface **322** will communicate with GSM-type SIM card **234** using an application programming interface (API), such as a PC Smartcard (PC/SC) interface, obtained from the service provider and plugged into the UE **230** as a dynamic linked library file (DLL).

The generation and use of session key for encryption of WLAN packets in conventional WLANs generally follows vendor specific interfaces. Thus, session key for encryption of WLAN packets depend on vendor specifications. In a preferred embodiment, in the communication system of the present invention the encryption key is generated based upon one or more ciphering key (Kc) generated during EAP/GSM authentication.

The access points **228**A, **228**B, **228**C, required to work with the communication system **200** of the present invention must contain WLAN based authentication and session encryption support. The access point points **228**A, **228**B, **228**C, will also be required to act as a RADIUS client to the RADIUS system **310** or server **312** and as a Network Access Server (NAS) in user authentication processes, causing EAP messages to be exchanged via RADIUS messaging. Two vendors offering access points **228**A, **228**B, **228**C, meeting the above specifications include Proxim Inc., of Sunnyvale, Calif., and Cisco Inc., of San Jose, Calif.

In addition to the above, preferably the communication system **200** further includes a RADIUS server **312** capable of performing following functions:

Interface with the access points **228**A, **228**B, **228**C, for authentication of private UEs **230**, through interpretation of either a Username field or a EAP User Identity field in the RADIUS authentication request **398**.

Route the authentication request to the appropriate authentication server **328**.

Act as a proxy to the public HLR/VLR **244** or to an external RADIUS system **310** or private HLR **316** if roaming is enabled, by routing of user authentication request to the appropriate HLR based upon information contained in the Username field.

Where the public or private HLR **244**, **316**, is a central HLR, the RADIUS Server **212** will act as a proxy to forward authentication request to the HLR.

Where the public or private HLR **244**, **316**, is a distributed HLR, the RADIUS Server **312** could be adapted to contact the correct HLR in either of the following ways:

1. Query a standalone Central Address Table (CAT) Server (not shown) to match the HLR corresponding to subscriber IMS1; or

2. Use a configuration table (not shown) that matches IMSI ranges of the UE **230** with the controlling HLR. (This model works if IMS1 partitioning is implicitly or explicitly enabled for subscriber provisioning across multiple HLRs)

Receive RADIUS accounting packets generated by different access points **128**A, **128**B, **128**C.

Forward accounting packets to a billing server (not shown) through a EAP interface **222**.

Forward a copy of the accounting packets to the UE **230** home RADIUS server **312** or accounting server for the case of roaming subscribers.

Preferably, the RADIUS or private HLR **316** supports all of the following attributes or capabilities:

Ability to enable/Disable WLAN **228** access for a particular UE **230**, based upon subscriber IMSI.

Ability to re-authenticate the subscriber with the WLAN **228** upon timer the session timer expiry at the access point **228**A, **228**B, **228**C. (Session timeout value)

Ability to use an algorithm to authenticate a subscriber to the WLAN **228**. (Authentication algorithm)

Ability to notify the user with an operator defined message with appropriate text whenever WLAN access or authentication is attempted. (Notification message)

Ability to specify the maximum inactivity time after which the UE **230** will be assumed to wandered from out of the range of access point **228**A, **228**B, **228**C, and removed from active user list. (Idle Timeout)

Ability to specify the maximum number of consecutive failed authentication attempts before the UE **230** will be disabled from WLAN access. (Retry limit)

More preferably, the RADIUS or private HLR **316** of the communication system **200** will support following Read-only attributes:

Ability to store information about the MAC address of the UE **230** used by the subscriber to access WLAN **228**. (Calling Station Id)

Ability to provide the date and time when last authentication attempt was made on WLAN **228**. (Last Access Time)

Ability to provide the date and time when last successful WLAN **228** authentication happened for the UE **230**. (Last Successful access time)

Ability to provide other miscellaneous connection information passed by the access point **228**A, **228**B, **228**C, e.g., connected on 802.11b at 10 MBPS etc. (Connect Information)

As noted above, the RADIUS or private HLR **216** will communicate with the RADIUS server **312** using an EAP interface only. This will avoid use, creation and maintenance of a proprietary protocol between RADIUS server and the HLR. To support the EAP interface **322**:

An MD5 algorithm is implemented to verify the identity of the RADIUS server **312** acting as proxy to the public or private HLR, and to derive the user information from the encrypted message.

The EAP interface listens on well-known RADIUS server port, and processes only those RADIUS messages that contain EAP attributes to perform an EAP authentication (Identity request, access challenge(s), EAP success or failure) procedure to complete user authentication

Frames RADIUS access accept message with all the useful WLAN subscriber profile information provisioned at the public or private HLR.

Finally, in one embodiment, a subscriber management user interface (SMGUI **414**) is provided to allow provisioning of the WLAN **228** service attributes including, for example, display of read-only attributes of the communication system **200**. In one version of this embodiment, the display of the SMGUI **414** could be auto refreshed using an asynchronous mechanism with the private HLR **316**. Alternatively, for simplicity of implementation, a refresh button on the SMGUI **414** could be used to get updates from the private HLR **316**.

The foregoing descriptions of specific embodiments of the present invention have been presented for purposes of illustration and description. They are not intended to be exhaustive or to limit the invention to the precise forms disclosed, and obviously many modifications and variations are possible in light of the above teaching. The embodiments were chosen and described in order to best explain the principles of the invention and its practical application, to thereby enable others skilled in the art to best use the invention and various embodiments with various modifications as are suited to the particular use contemplated. It is intended that the scope of the invention be defined by the claims appended hereto and their equivalents.

The present disclosure is written for ease of understanding by those of skill in the art. For others, the following documents, incorporated herein by reference for all purposes, may be reviewed for additional information.

Local and Metropolitan Area Networks, IEEE Standard for Wireless LAN Medium Access Control (MAC) and Physical Layer (PHY) specifications, IEEE Std. 802.11-1997, pp. 34-59 and pp. 123-128

"HiperLAN: The High Performance Radio Local Area Network Standard", by G. A. Halls, Elec. & Comm. Eng. Journal, Dec. 1994, pp. 289-296

What is claimed is:

1. A communication system for providing voice and data communication between a public network and a plurality of user equipment terminals (UEs) at a plurality of locations, the communication system comprising:

a community wireless local area network (WLAN) comprising fixed equipment that includes:

a centralized base transceiver station (CBTS) coupled to the public network; and

a plurality of remote transceiver stations (RTSs) each coupled to a number of the plurality of UEs, and, via a radio link, to the CBTS, whereby the voice and data

communication is provided between the public network and the plurality of UEs;

wherein at least one of the RTSs is located at each of the plurality of locations; and

wherein the CBTS and each RTS comprises a respective Global Systems for Mobile communication/General Packet Radio Service (GSM/GPRS) transceiver for communications therebetween in order to provide data communication between the public network and the plurality of UEs;

wherein respective GSM/GPRS radio frequency signals transmitted by the CBTS to the RTSs and by each RTS to the CBTS are frequency converted from respective first frequencies within conventional GSM frequency bands to respective second frequencies above the conventional GSM frequency bands; and

wherein the respective frequency-converted GSM/GPRS radio frequency signals received by the CBTS from the RTSs and by each RTS from the CBTS are frequency converted from respective second frequencies above the conventional GSM frequency bands to respective first frequencies within the conventional GSM frequency bands.

2. The communication system according to claim **1**, wherein the public network comprises a public switched telephone network and an Internet, and wherein the CBTS is coupled to the public network via a trunk.

3. The communication system according to claim **1**, wherein the CBTS and each RTS further comprises a WLAN transceiver to provide voice communication between the public network and the plurality of UEs.

4. The communication system according to claim **3**, wherein the WLAN transceiver is compatible with an open standard protocol selected from a group consisting of: High Performance Local Area Network (HiperLAN/1); High Performance Local Area Network (HiperLAN/2); and Institute of Electrical and Electronics Engineers 802.11 (IEEE 802.11).

5. The communication system according to claim **1**, wherein the CBTS and each of the plurality of RTSs includes a frequency converter.

6. The communication system according to claim **1**, wherein the public network comprises a public switched telephone network and the Internet, and wherein the CBTS is coupled to the public network via a public wireless network.

7. A system comprising:

a centralized base transceiver station (CBTS) coupled to a public network; and

a plurality of remote transceiver stations (RTSs), each coupled to a plurality of user equipment terminals (UEs) at a plurality of locations, and, via a radio link, to the CBTS;

wherein at least one of the RTSs is located at each of the plurality of locations; and

wherein the CBTS and each RTS comprises:

a respective Global Systems for Mobile communication (GSM) transceiver that transmits and receives GSM radio frequency signals at frequencies within conventional GSM frequency bands; and

a respective frequency converter;

wherein respective GSM radio frequency signals transmitted by the CBTS to the RTSs and by each RTS to the CBTS are frequency converted by the respective frequency converter from respective first frequencies within conventional GSM frequency bands to respective second frequencies above the conventional GSM frequency bands; and

wherein the respective frequency-converted GSM radio frequency signals received by the CBTS from the RTSs and by each RTS from the CBTS are frequency converted by the respective frequency converter from respective second frequencies above the conventional GSM frequency bands to respective first frequencies within the conventional GSM frequency bands.

8. The system according to claim **7**, wherein each GSM transceiver is adapted to communicate using GSM technology at a frequency band within (ETSI) specification.

9. The system according to claim **8**, wherein each GSM transceiver is adapted to communicate using GSM technology at a frequency band of at least about 3.5 Ghz.

10. The system according to claim **7**, wherein each GSM transceiver is a respective GSM/General Packet Radio Service (GSM/GPRS) transceiver, and wherein the CBTS and each RTS is adapted to communicate data.

11. In a communication system including a community wireless local area network (WLAN) comprising fixed equipment that includes a centralized base transceiver station (CBTS) coupled to a public network, and a plurality of remote transceiver stations (RTSs) each coupled to a number of a plurality of User Equipment terminals (UEs) located at a plurality of locations, and, via a radio link, to the CBTS, a method of providing voice and data communication between the plurality of UEs and the public network, the method comprising:

receiving call information in the community WLAN;

providing subscriber identification and security information for the UE to the community WLAN using at least one of the RTSs; and

coupling the UE to the public network over the community WLAN, wherein coupling the UE to the public network comprises coupling the CBTS to the RTS via a radio link using a GSM standard;

wherein at least one of the RTSs is located at each of the plurality of locations;

wherein the CBTS and each RTS comprises a respective Global Systems for Mobile communication/General Packet Radio Service (GSM/GPRS) transceiver for communications therebetween;

wherein respective GSM/GPRS radio frequency signals transmitted by the CBTS to the RTSs and by each RTS to the CBTS are frequency converted from respective first frequencies within conventional GSM frequency bands to respective second frequencies above the conventional GSM frequency bands; and

wherein the respective frequency-converted GSM/GPRS radio frequency signals received by the CBTS from the RTSs and by each RTS from the CBTS are frequency converted from respective second frequencies above the conventional GSM frequency bands to respective first frequencies within the conventional GSM frequency bands.

12. The method according to claim **11**, wherein the public network comprises a public switched telephone network and an Internet, and wherein the step of coupling the UE to the public network comprises the step of coupling the CBTS to the public network via a trunk.

13. The method according to claim **11**, wherein the CBTS and each RTS further comprises a WLAN transceiver, and wherein the step of coupling the UE to the public network comprises the step of coupling the CBTS to the RTS using a WLAN standard to provide voice communication between the public network and the plurality of UEs.

14. The method according to claim **13**, wherein the WLAN standard is an open standard protocol selected from a group

consisting of: High Performance Local Area Network (HiperLAN/1); High Performance Local Area Network (HiperLAN/2); and Institute of Electrical and Electronics Engineers 802.11 (IEEE 802.11).

15. The method according to claim **11**, wherein the public network comprises a public switched telephone network and the Internet, and wherein the step of coupling the UE to the public network comprises the step of coupling the CBTS to the public network via a public wireless network.

* * * * *