US007197561B1

(12) **United States Patent**
Lovy et al.

(10) **Patent No.: US 7,197,561 B1**
(45) **Date of Patent: Mar. 27, 2007**

(54) **METHOD AND APPARATUS FOR MAINTAINING THE STATUS OF OBJECTS IN COMPUTER NETWORKS USING VIRTUAL STATE MACHINES**

(75) Inventors: **David M. Lovy**, Blossvale, NY (US); **Brant M. Fagan**, LaFayette, NY (US); **Robert J. Bojanek**, Rome, NY (US)

(73) Assignee: **ShoreGroup, Inc.**, New York, NY (US)

(*) Notice: Subject to any disclaimer, the term of this patent is extended or adjusted under 35 U.S.C. 154(b) by 753 days.

(21) Appl. No.: **10/109,481**

(22) Filed: **Mar. 28, 2002**

Related U.S. Application Data

(60) Provisional application No. 60/279,397, filed on Mar. 28, 2001.

(51) **Int. Cl.**
G06F 15/173 (2006.01)

(52) **U.S. Cl.** **709/224**; 709/217; 709/218; 709/219; 709/223; 709/224; 714/4; 714/47; 714/48; 714/49; 714/50

(58) **Field of Classification Search** 709/223–225, 709/205–207, 217–219; 714/4, 47–50; 719/315, 719/313, 319; 715/855
See application file for complete search history.

(56) **References Cited**

U.S. PATENT DOCUMENTS

4,937,825 A 6/1990 Ballard et al.
5,261,044 A 11/1993 Dev et al.
5,436,909 A 7/1995 Dev et al.
5,455,932 A * 10/1995 Major et al. 711/162
5,504,921 A * 4/1996 Dev et al. 709/223
5,655,081 A 8/1997 Bonnell et al.
5,819,028 A 10/1998 Manghirmalani et al.
5,828,830 A 10/1998 Rangaraian et al.

(Continued)

OTHER PUBLICATIONS

"Flowcharting", http://www.hci.com.au/hcisite2/toolkit/flowchar.htm, pp. 1-6.

Primary Examiner—Saleh Najjar
Assistant Examiner—Shawki Ismail
(74) *Attorney, Agent, or Firm*—Rissman Jobse Hendricks & Oliverio, LLP

(57) **ABSTRACT**

A network appliance for monitoring, diagnosing and documenting problems among a plurality of devices and processes (objects) coupled to a computer network utilizes periodic polling and collection of object-generated trap data to monitor the status of objects on the computer network. The status of a multitude of objects is maintained in memory utilizing virtual state machines which contain a small amount of persistent data but which are modeled after one of a plurality of finite state machines. The memory further maintains dependency data related to each object which identifies parent/child relationships with other objects at the same or different layers of the OSI network protocol model. A decision engine verifies through on-demand polling that a device is down. A root cause analysis module utilizes status and dependency data to locate the highest object in the parent/child relationship tree that is affected to determine the root cause of a problem. Once a problem has been verified, a "case" is opened and notification alerts may be sent out to one or more devices. A user interface allows all objects within the network to be displayed with their respective status and their respective parent/child dependency objects in various formats.

16 Claims, 22 Drawing Sheets

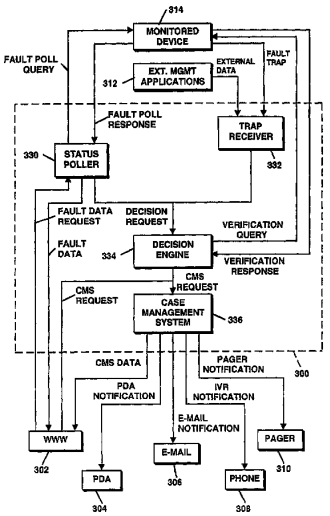

U.S. PATENT DOCUMENTS

5,926,462 A 7/1999 Schenkel et al.
5,933,416 A 8/1999 Schenkel et al.
6,012,152 A 1/2000 Douik et al.
6,046,988 A 4/2000 Schenkel et al.
6,138,171 A * 10/2000 Walker 719/318
6,148,337 A 11/2000 Estberg et al.
6,182,249 B1 1/2001 Wookey et al.
6,269,330 B1 7/2001 Cidon et al.
6,330,600 B1 12/2001 Matchefts et al.
6,339,789 B1 1/2002 Sugauchi et al.
6,434,620 B1 * 8/2002 Boucher et al. 709/230
6,453,254 B1 * 9/2002 Bullwinkel et al. 702/81
6,477,667 B1 11/2002 Levi et al.
6,484,261 B1 11/2002 Wiegel
6,535,227 B1 3/2003 Fox et al.
6,553,515 B1 4/2003 Gross et al.
6,601,195 B1 * 7/2003 Chirashnya et al. 714/43
6,813,278 B1 * 11/2004 Swartz et al. 370/466
6,941,557 B1 * 9/2005 Jakobson et al. 719/316
6,968,291 B1 * 11/2005 Desai 702/182
7,028,228 B1 * 4/2006 Lovy et al. 714/57
7,096,383 B2 * 8/2006 Talaugon et al. 714/21
2002/0138785 A1 9/2002 Hammond et al.
2003/0074463 A1 * 4/2003 Swartz et al. 709/230

* cited by examiner

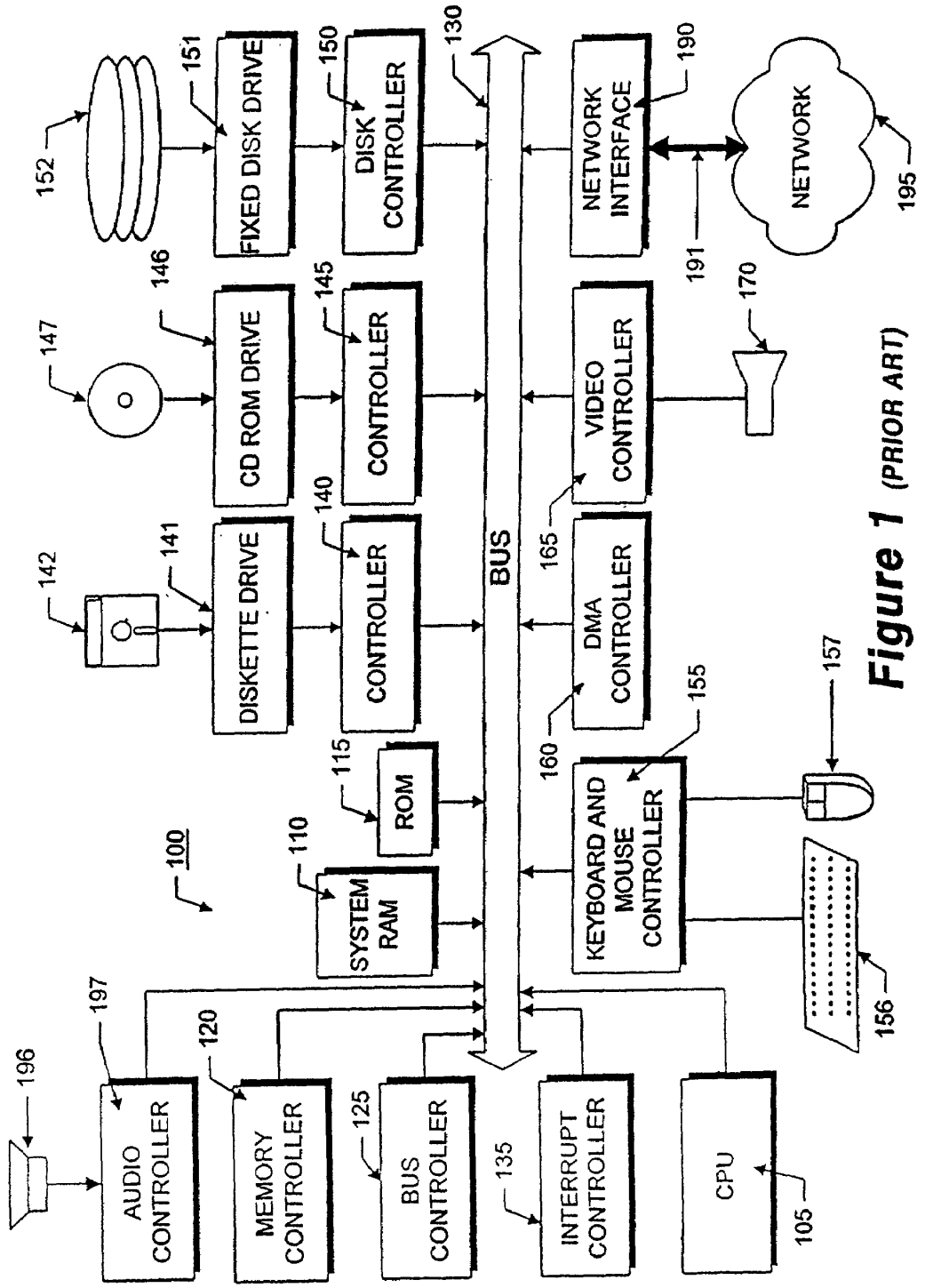

Figure 1 (PRIOR ART)

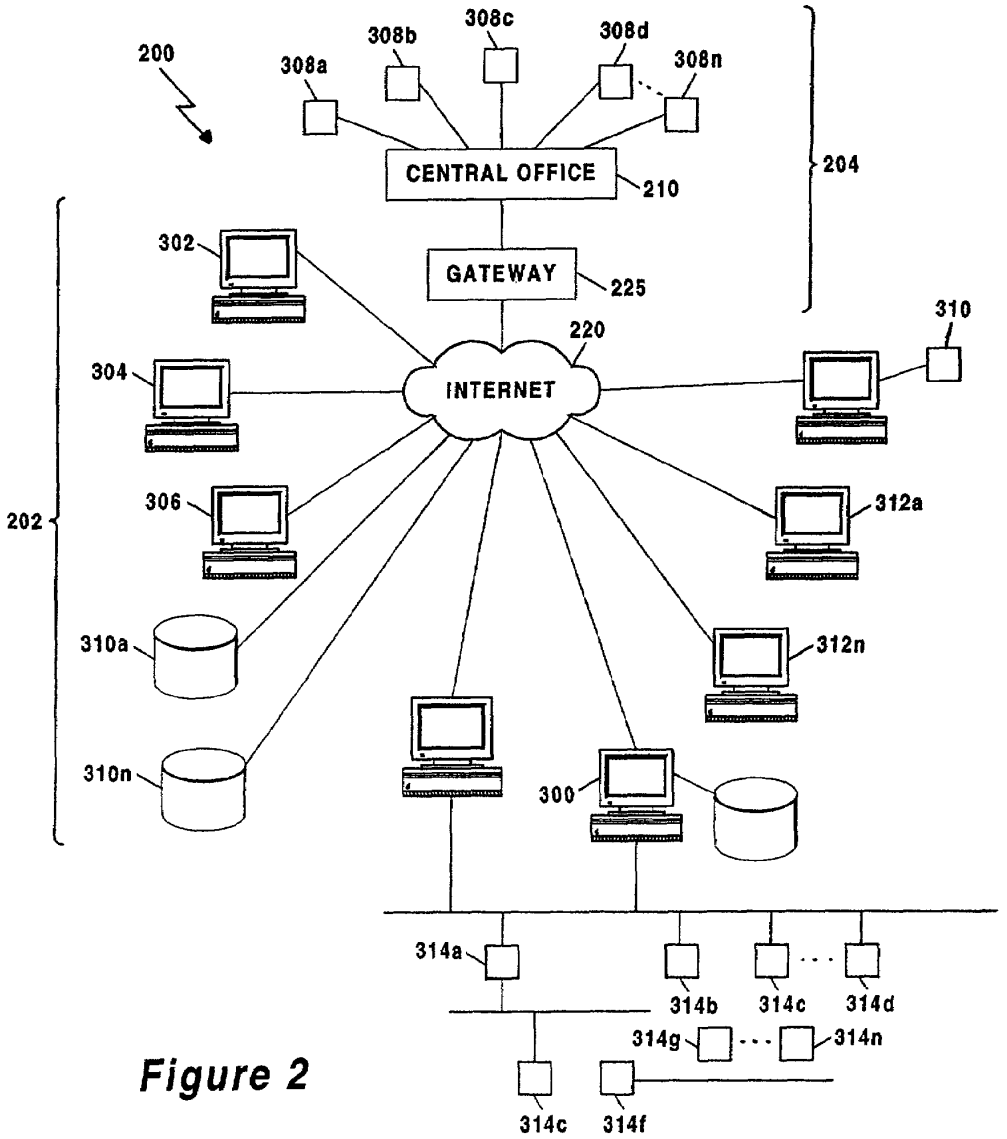
200
308a
308b
308c
308d
308n
CENTRAL OFFICE
210
204
GATEWAY
225
302
304
306
310a
310n
202
220
INTERNET
310
312a
312n
300
314a
314b
314c
314d
314g
314n
314c
314f

Figure 2

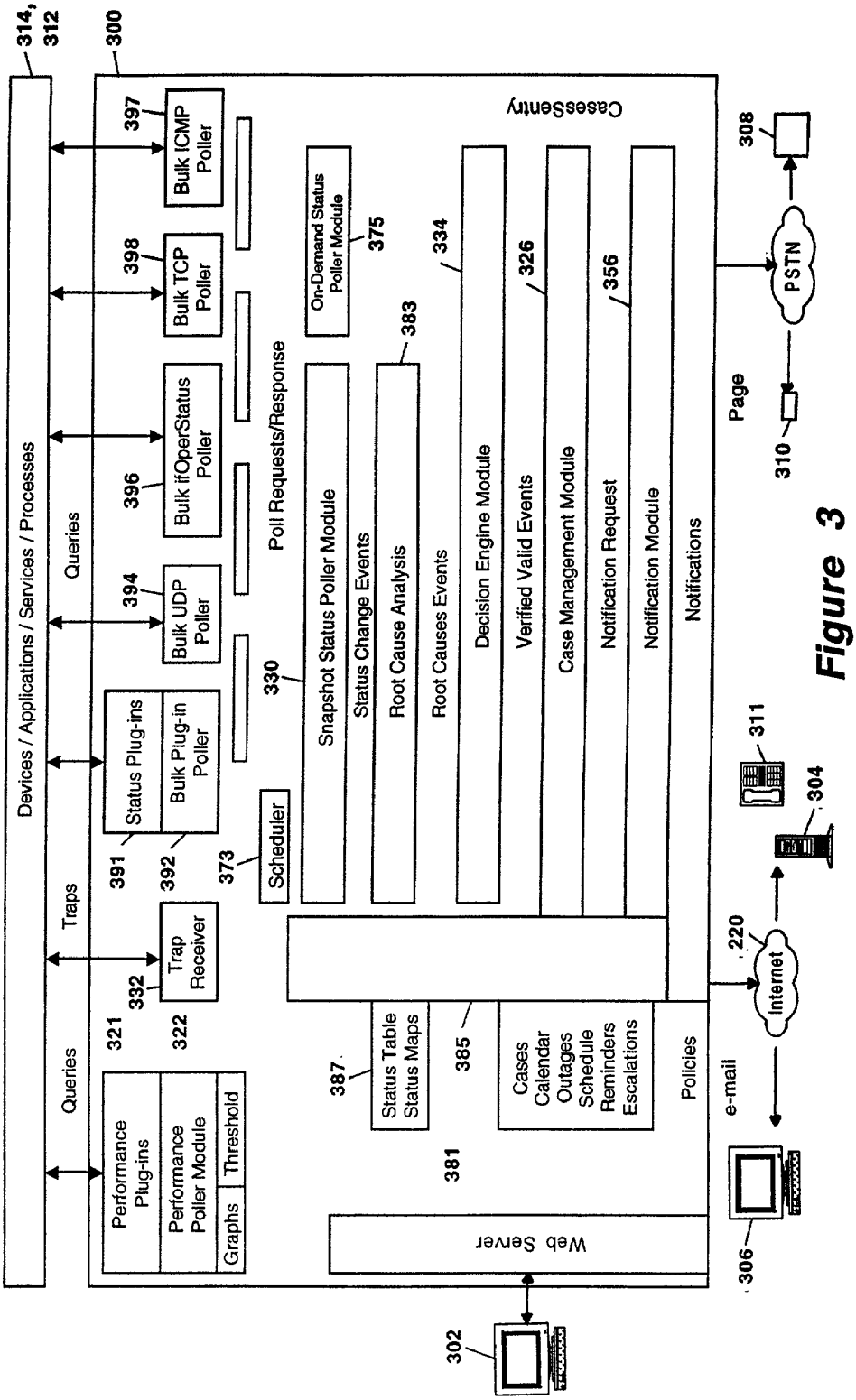
314, 312
300
Devices / Applications / Services / Processes
Queries
Traps
Queries
397
Bulk ICMP Poller
398
Bulk TCP Poller
396
Bulk ifOperStatus Poller
394
Bulk UDP Poller
Status Plug-ins
Bulk Plug-in Poller
391
392
Trap Receiver
332
321
322
Performance Plug-ins
Performance Poller Module
Graphs
Threshold
Poll Requests/Response
330
373
Scheduler
CasesSentry
On-Demand Status Poller Module
375
Snapshot Status Poller Module
Status Change Events
383
Root Cause Analysis
Root Causes Events
334
Decision Engine Module
Verified Valid Events
326
Case Management Module
Notification Request
356
Notification Module
Notifications
Page
Status Table
Status Maps
387
385
Cases
Calendar
Outages
Schedule
Reminders
Escalations
Policies
381
Web Server
302
306
e-mail
Internet
220
304
311
310
PSTN
308

Figure 3

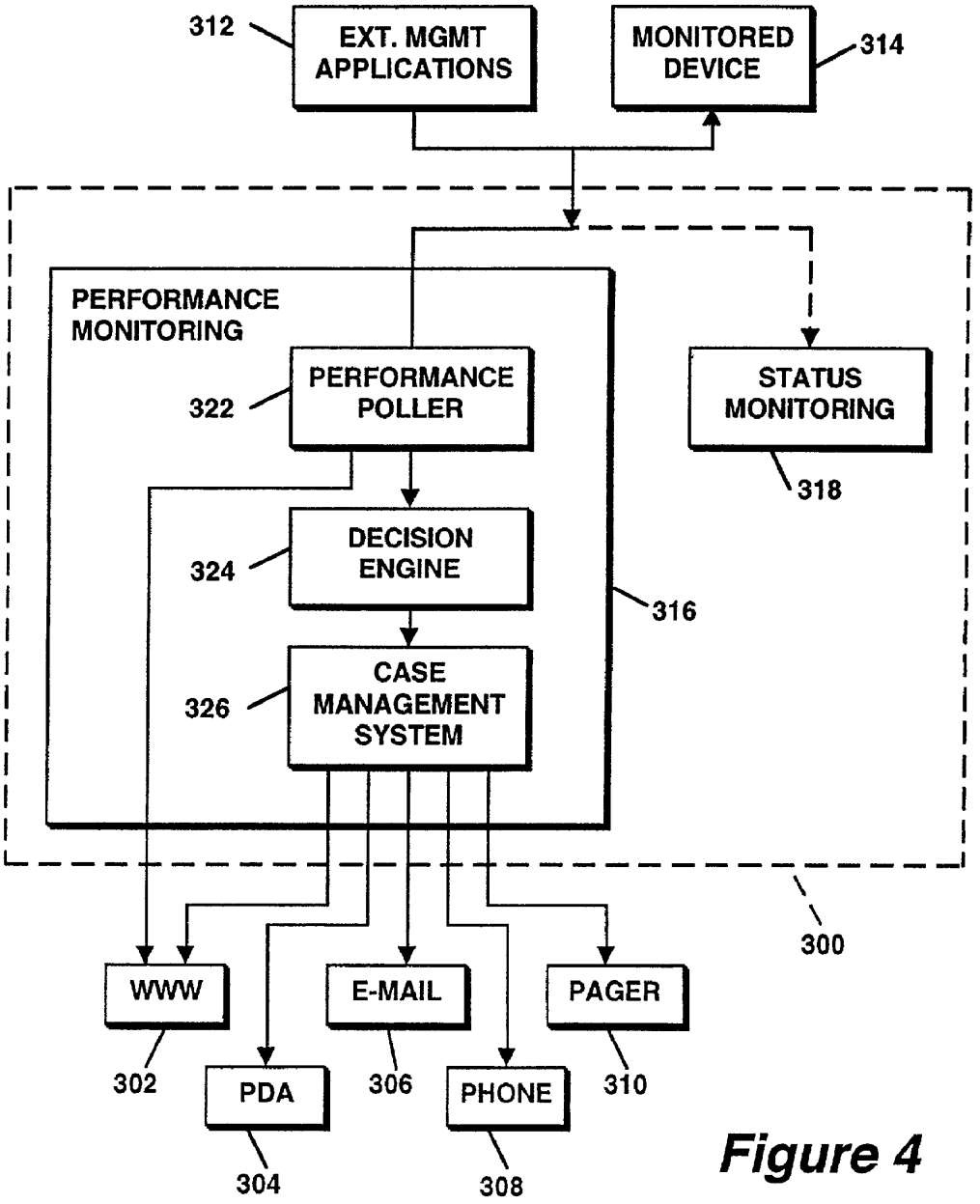
312
EXT. MGMT APPLICATIONS
MONITORED DEVICE
314
PERFORMANCE MONITORING
322
PERFORMANCE POLLER
STATUS MONITORING
318
324
DECISION ENGINE
316
326
CASE MANAGEMENT SYSTEM
300
WWW
E-MAIL
PAGER
302
PDA
306
PHONE
310
304
308

Figure 4

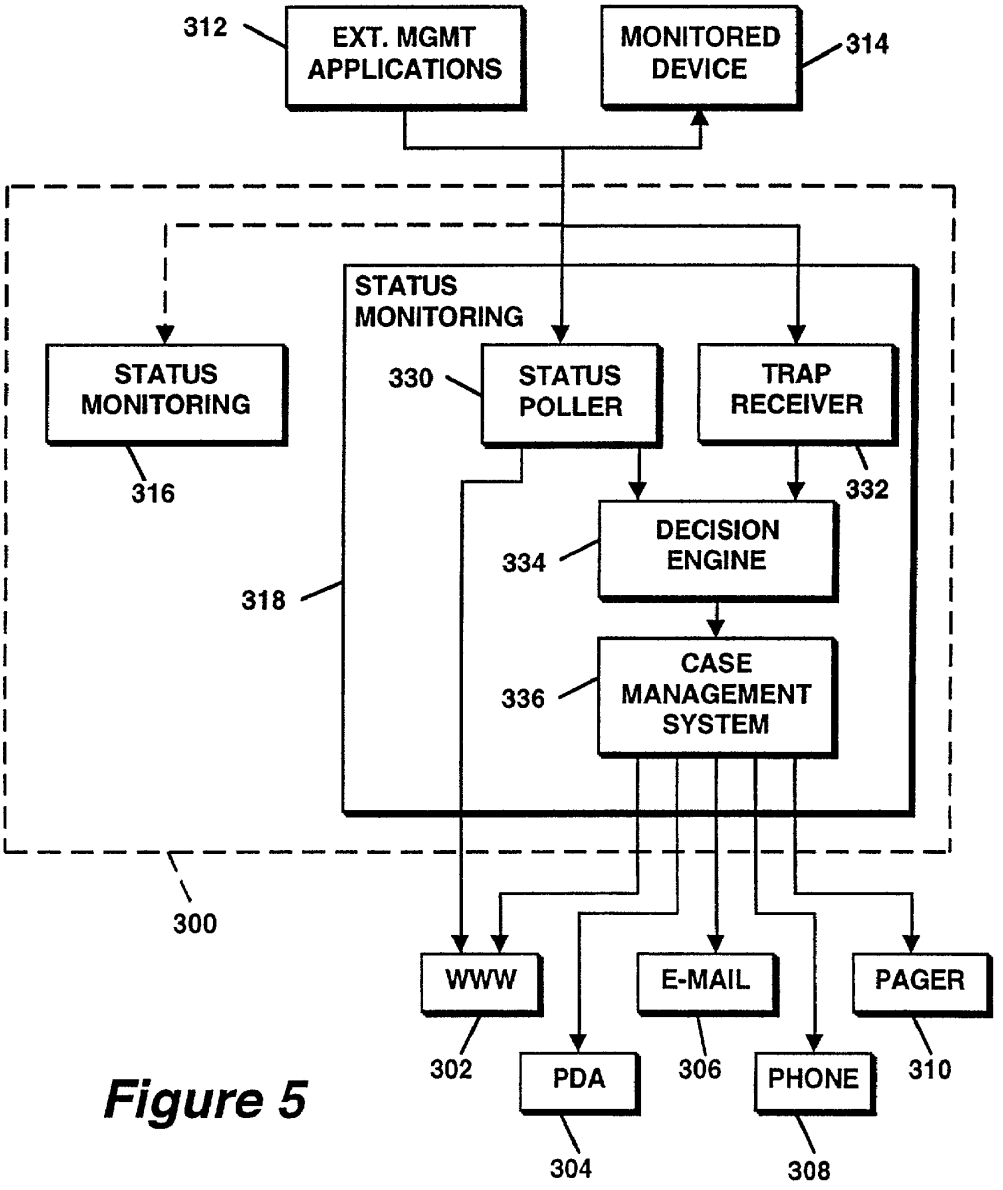
312
EXT. MGMT APPLICATIONS
MONITORED DEVICE
314
STATUS MONITORING
STATUS MONITORING
330
STATUS POLLER
TRAP RECEIVER
316
332
DECISION ENGINE
334
318
CASE MANAGEMENT SYSTEM
336
300
WWW
E-MAIL
PAGER
302
PDA
306
PHONE
310
304
308

Figure 5

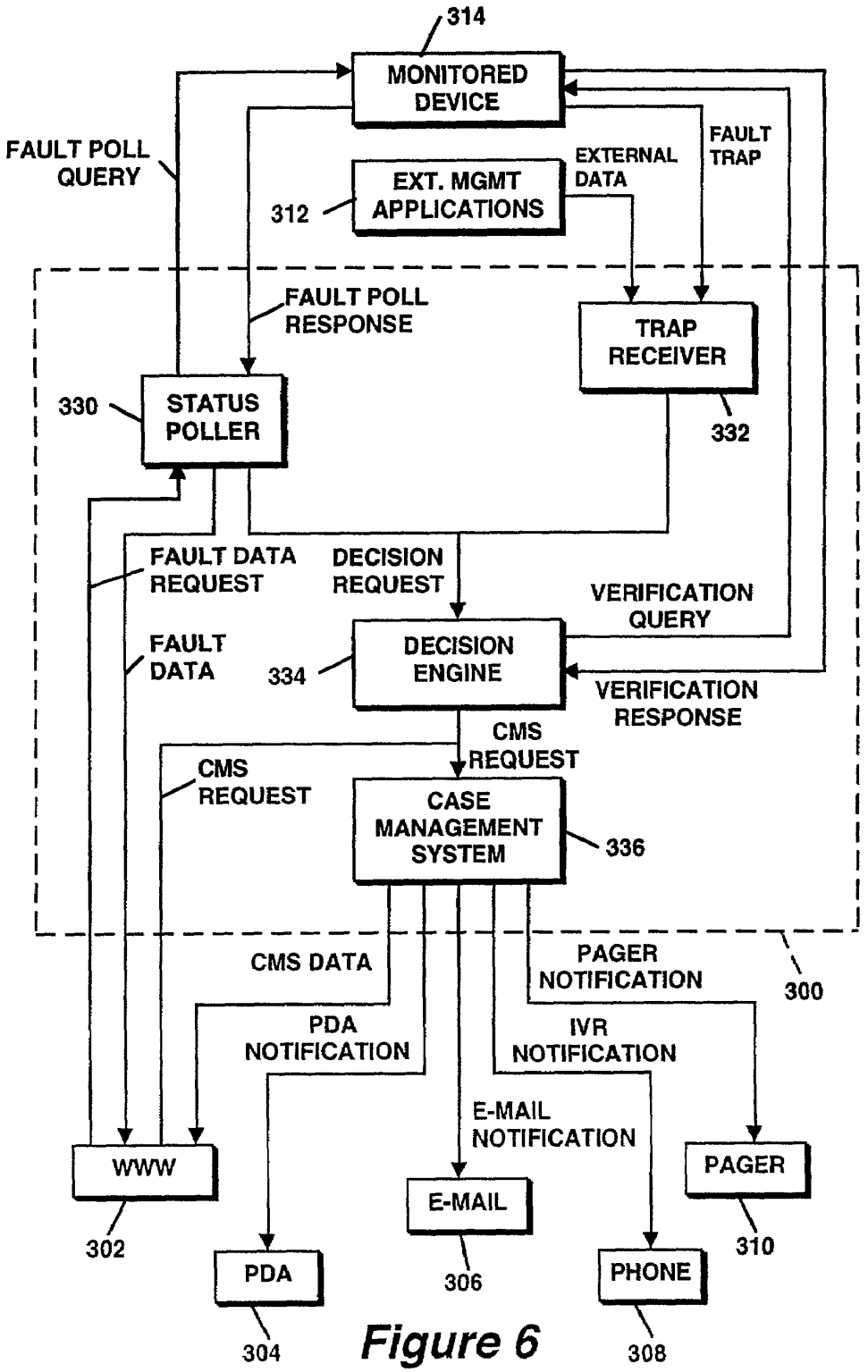
314
MONITORED DEVICE
FAULT POLL QUERY
EXT. MGMT APPLICATIONS
312
EXTERNAL DATA
FAULT TRAP
FAULT POLL RESPONSE
TRAP RECEIVER
330
STATUS POLLER
332
FAULT DATA REQUEST
DECISION REQUEST
VERIFICATION QUERY
FAULT DATA
334
DECISION ENGINE
VERIFICATION RESPONSE
CMS REQUEST
CMS REQUEST
CASE MANAGEMENT SYSTEM
336
300
CMS DATA
PAGER NOTIFICATION
PDA NOTIFICATION
IVR NOTIFICATION
E-MAIL NOTIFICATION
WWW
PAGER
E-MAIL
302
310
PDA
306
PHONE
304
308

Figure 6

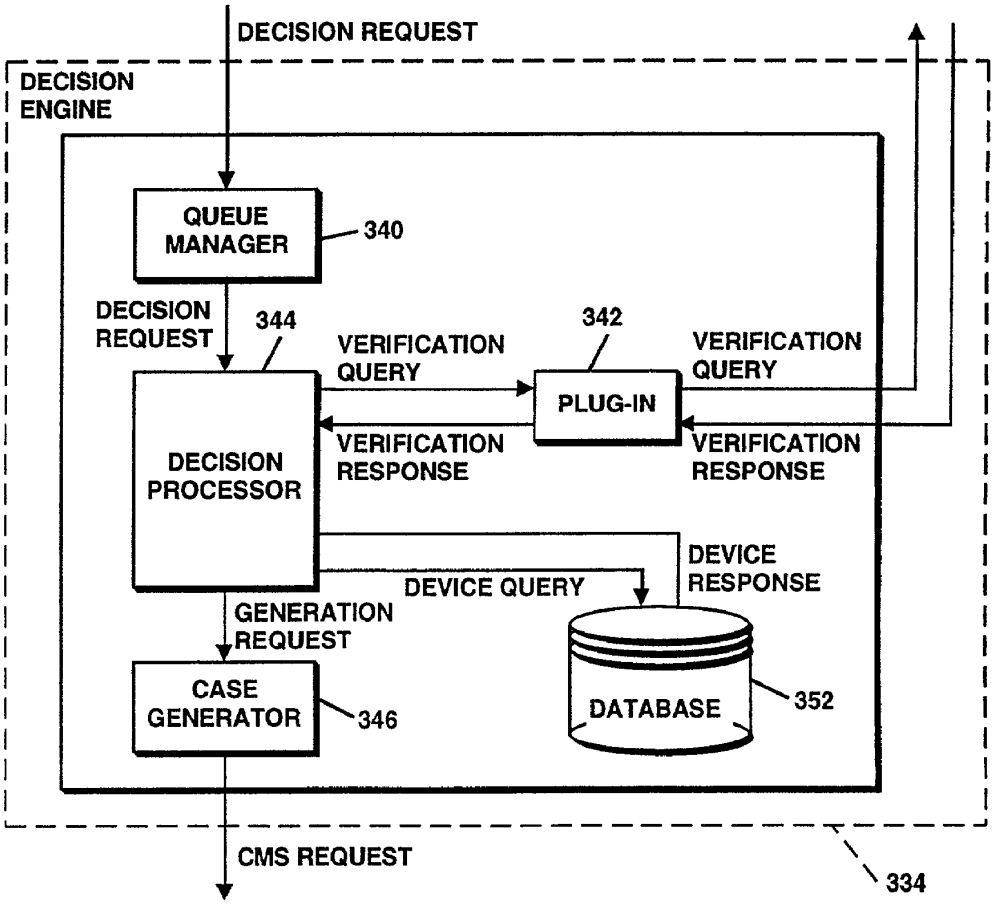
DECISION REQUEST
DECISION ENGINE
QUEUE MANAGER
340
DECISION REQUEST
344
342
VERIFICATION QUERY
PLUG-IN
VERIFICATION QUERY
VERIFICATION RESPONSE
VERIFICATION RESPONSE
DECISION PROCESSOR
DEVICE RESPONSE
DEVICE QUERY
GENERATION REQUEST
CASE GENERATOR
346
DATABASE
352
CMS REQUEST
334

Figure 7

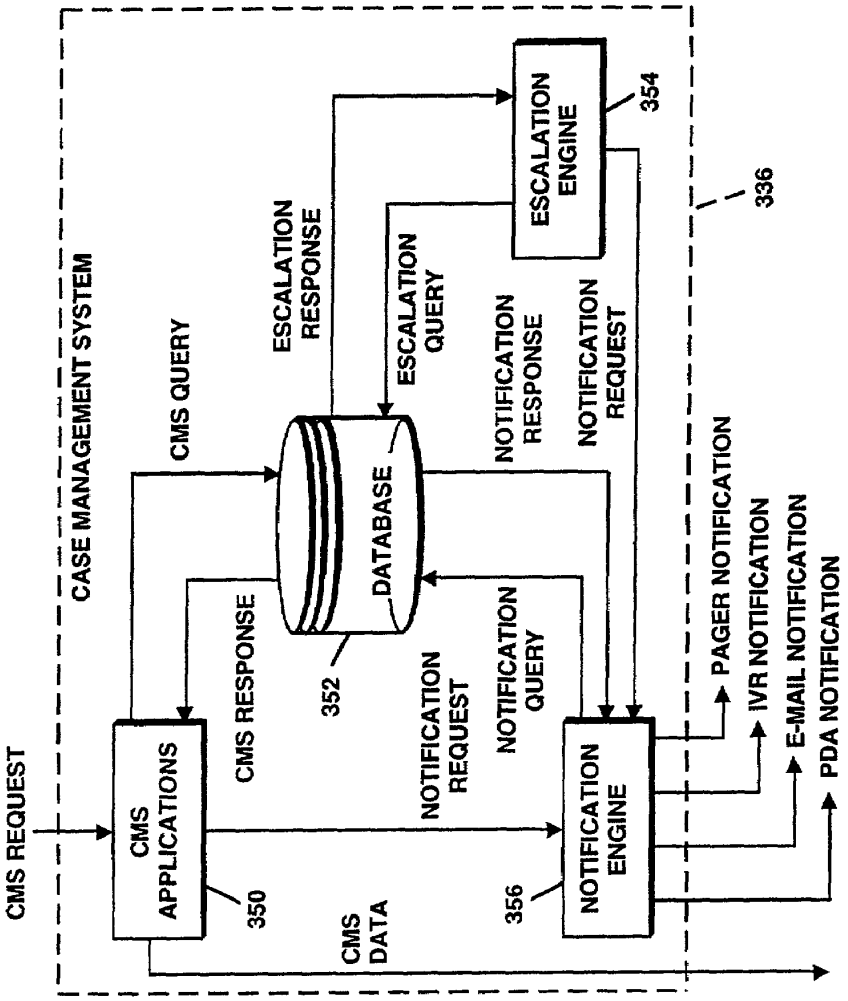
CASE MANAGEMENT SYSTEM
CMS REQUEST
CMS APPLICATIONS
350
CMS QUERY
CMS RESPONSE
CMS DATA
ESCALATION RESPONSE
DATABASE
352
ESCALATION QUERY
NOTIFICATION REQUEST
NOTIFICATION QUERY
ESCALATION ENGINE
354
NOTIFICATION RESPONSE
NOTIFICATION REQUEST
NOTIFICATION ENGINE
356
336
PAGER NOTIFICATION
IVR NOTIFICATION
E-MAIL NOTIFICATION
PDA NOTIFICATION

Figure 8

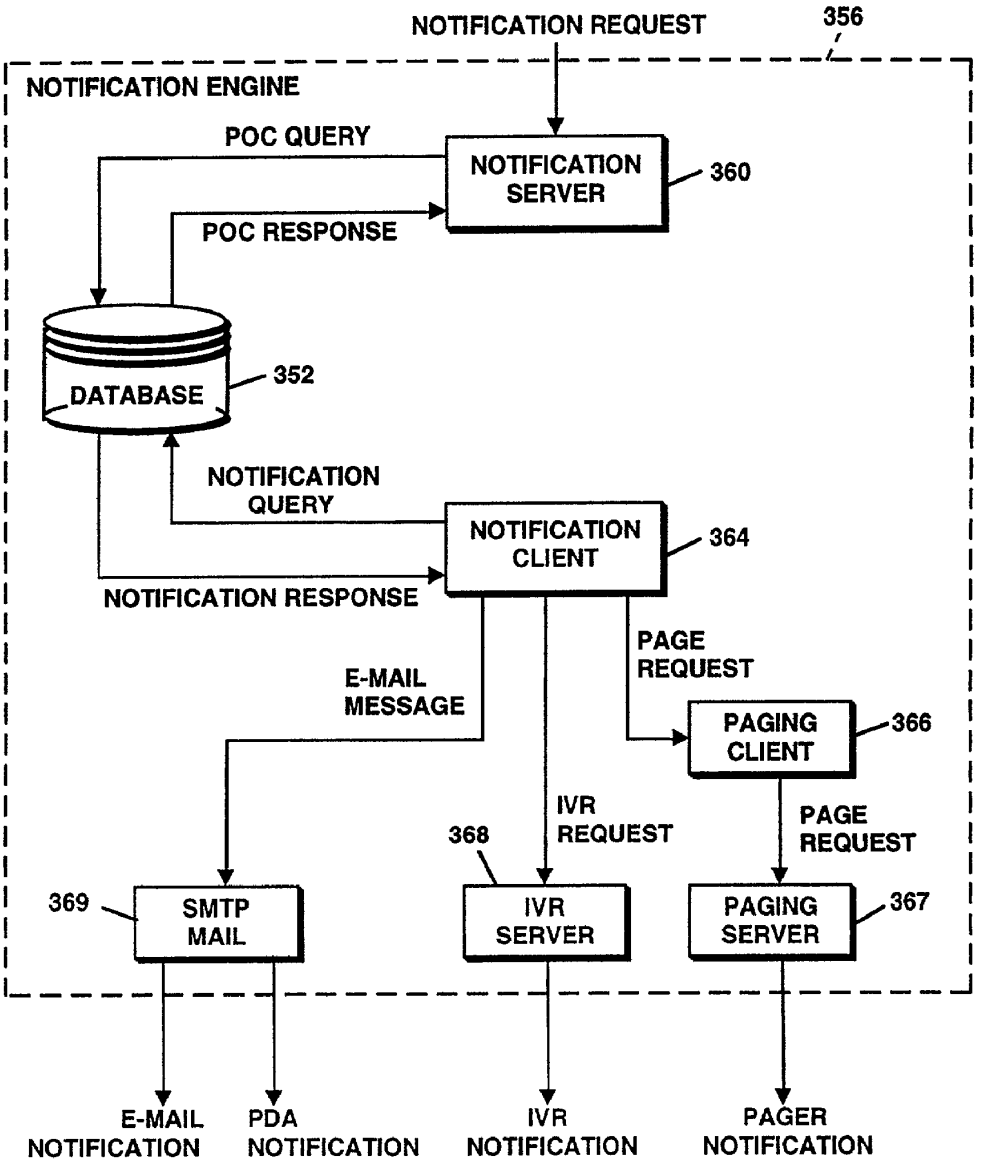
NOTIFICATION REQUEST
356
NOTIFICATION ENGINE
POC QUERY
NOTIFICATION SERVER
360
POC RESPONSE
DATABASE
352
NOTIFICATION QUERY
NOTIFICATION CLIENT
364
NOTIFICATION RESPONSE
PAGE REQUEST
E-MAIL MESSAGE
PAGING CLIENT
366
IVR REQUEST
368
PAGE REQUEST
369
SMTP MAIL
IVR SERVER
PAGING SERVER
367
E-MAIL NOTIFICATION
PDA NOTIFICATION
IVR NOTIFICATION
PAGER NOTIFICATION

Figure 9

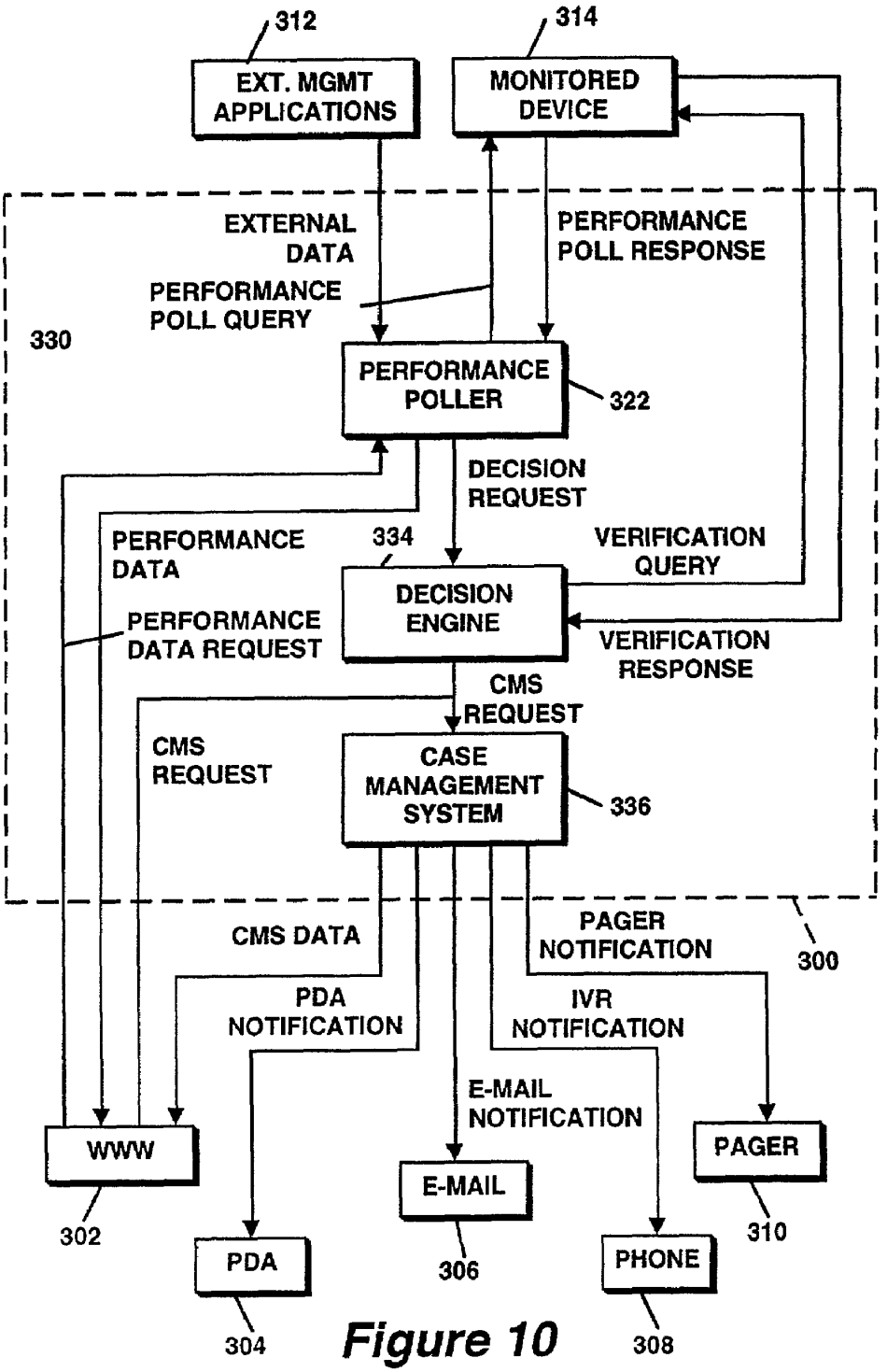
312
EXT. MGMT APPLICATIONS
314
MONITORED DEVICE
EXTERNAL DATA
PERFORMANCE POLL RESPONSE
PERFORMANCE POLL QUERY
330
PERFORMANCE POLLER
322
DECISION REQUEST
PERFORMANCE DATA
334
VERIFICATION QUERY
DECISION ENGINE
PERFORMANCE DATA REQUEST
VERIFICATION RESPONSE
CMS REQUEST
CMS REQUEST
CASE MANAGEMENT SYSTEM
336
CMS DATA
PAGER NOTIFICATION
300
PDA NOTIFICATION
IVR NOTIFICATION
E-MAIL NOTIFICATION
WWW
PAGER
E-MAIL
302
310
PDA
306
PHONE
304
308

Figure 10

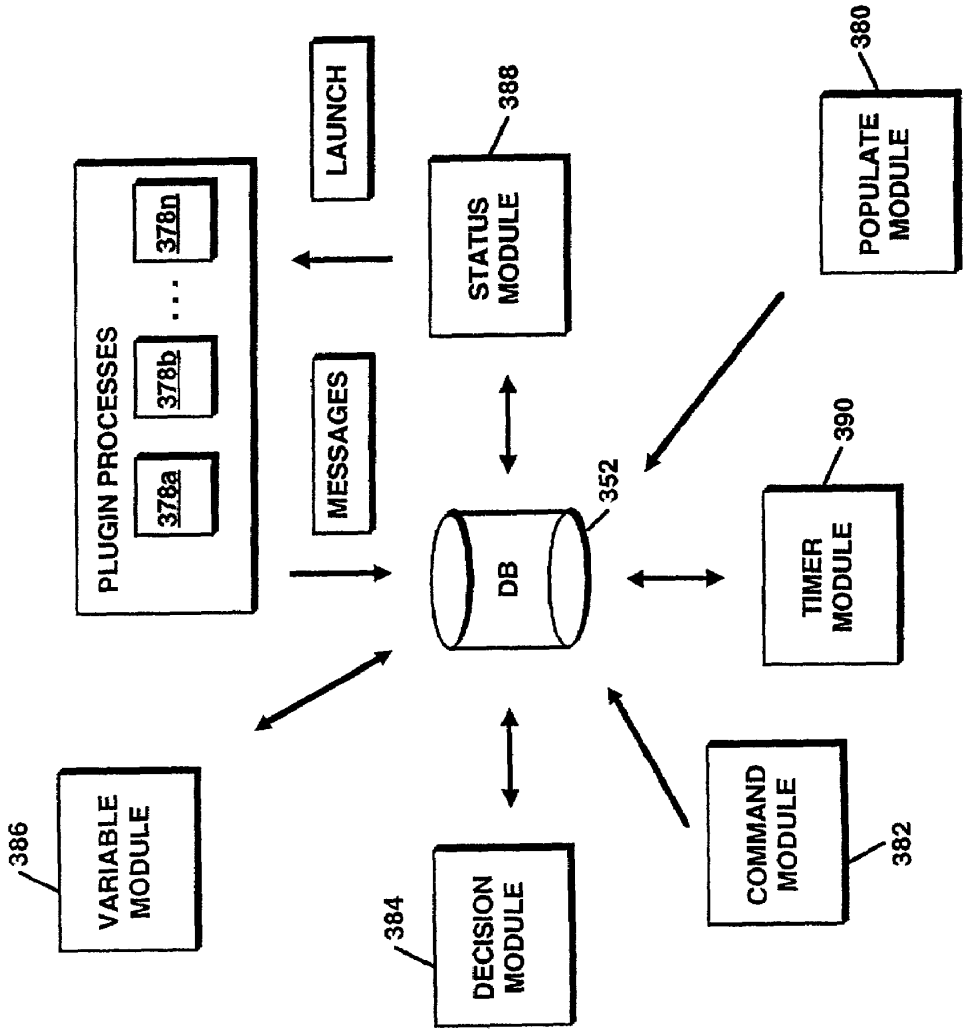
PLUGIN PROCESSES
378a
378b
378n
LAUNCH
MESSAGES
STATUS MODULE
388
POPULATE MODULE
380
DB
352
TIMER MODULE
390
VARIABLE MODULE
386
DECISION MODULE
384
COMMAND MODULE
382

Figure 11

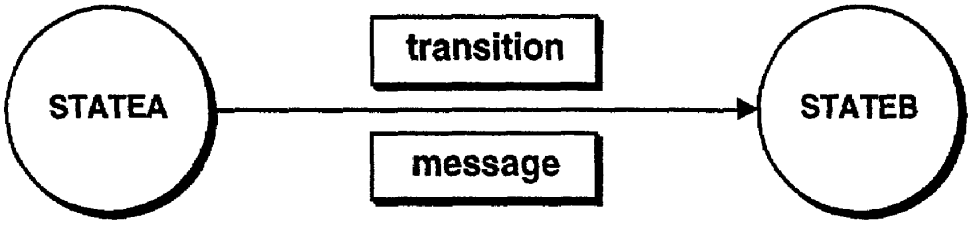

Figure 12A

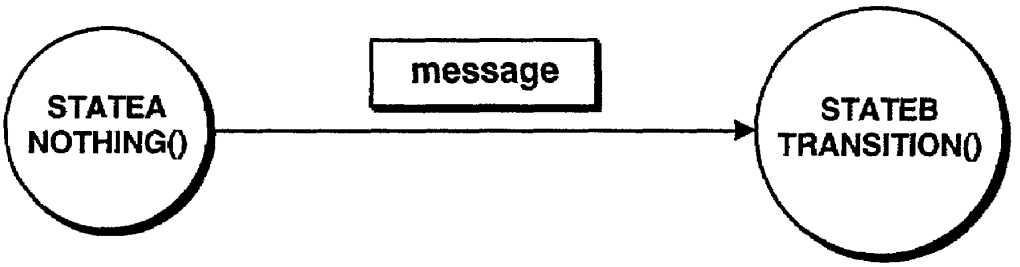

Figure 12B

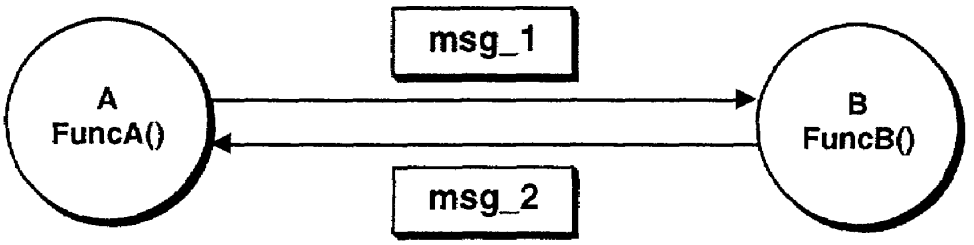

Figure 12C

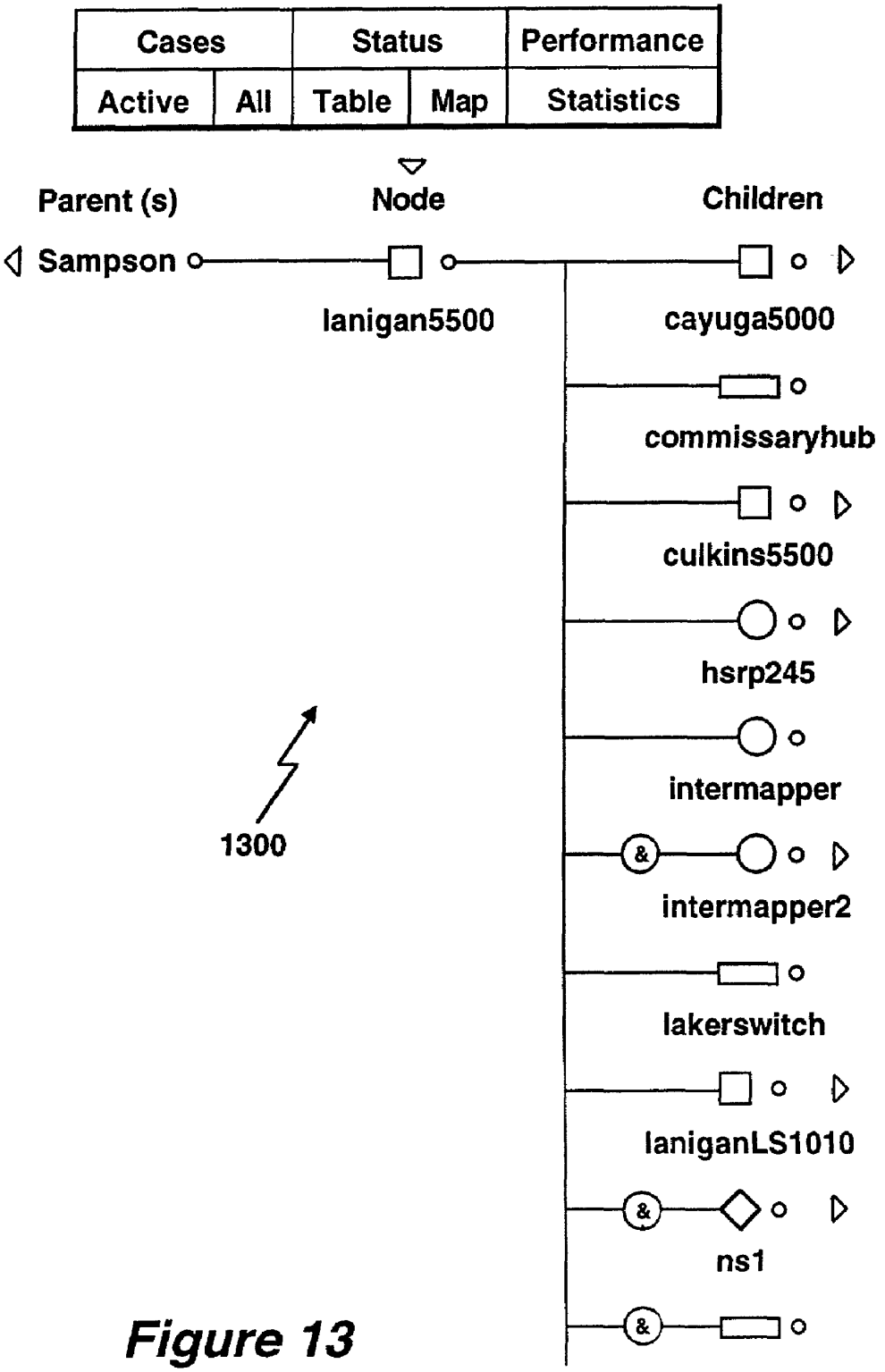
Cases
Status
Performance
Active
All
Table
Map
Statistics
Parent (s)
Node
Children
Sampson
lanigan5500
cayuga5000
commissaryhub
culkins5500
hsrp245
intermapper
intermapper2
lakerswitch
laniganLS1010
ns1
1300

Figure 13

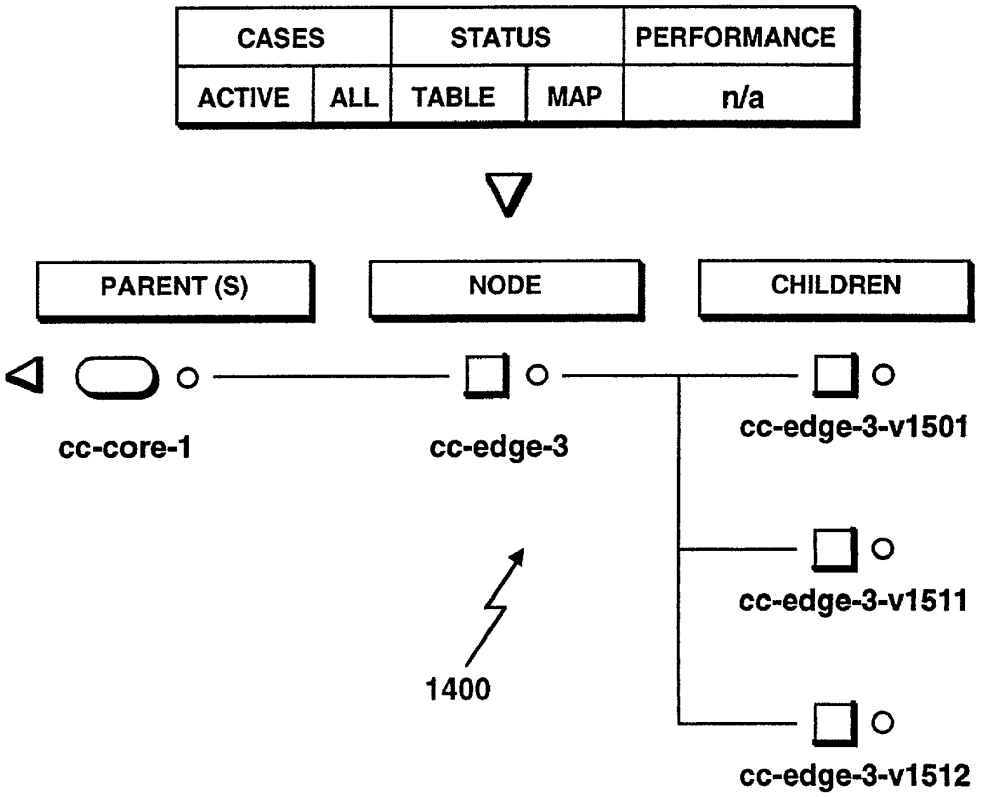
CASES
STATUS
PERFORMANCE
ACTIVE
ALL
TABLE
MAP
n/a
PARENT (S)
NODE
CHILDREN
cc-core-1
cc-edge-3
cc-edge-3-v1501
cc-edge-3-v1511
cc-edge-3-v1512
1400

Figure 14

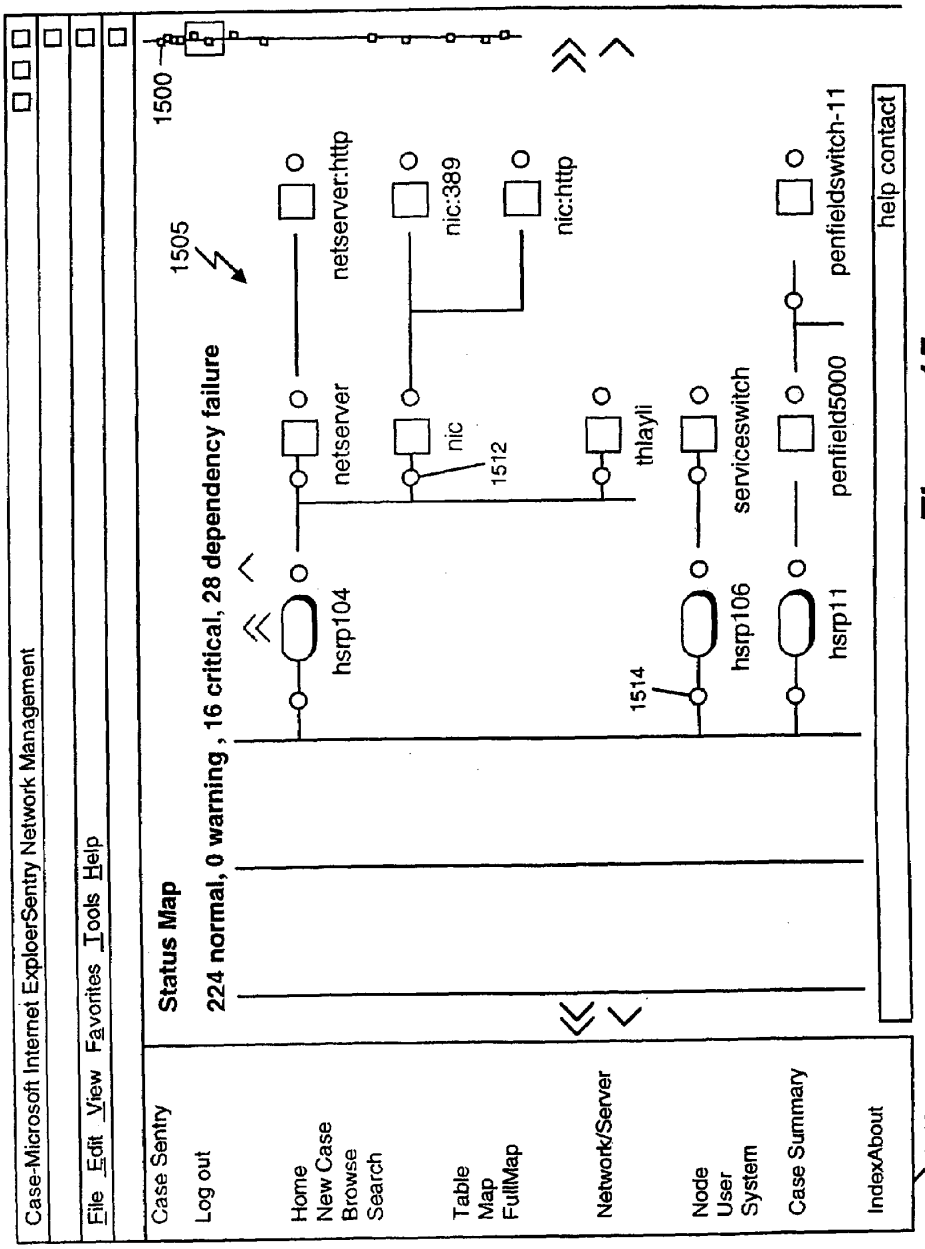
Case-Microsoft Internet ExploerSentry Network Management
File Edit View Favorites Tools Help
Case Sentry
Log out
Home
New Case
Browse
Search
Table
Map
FullMap
Network/Server
Node
User
System
Case Summary
IndexAbout
Status Map
224 normal, 0 warning , 16 critical, 28 dependency failure
1500
1505
1510
1512
1514
hsrp104
netserver
netserver:http
nic
nic:389
nic:http
thlayli
hsrp106
serviceswitch
hsrp11
penfield5000
penfieldswitch-11
help contact

Figure 15

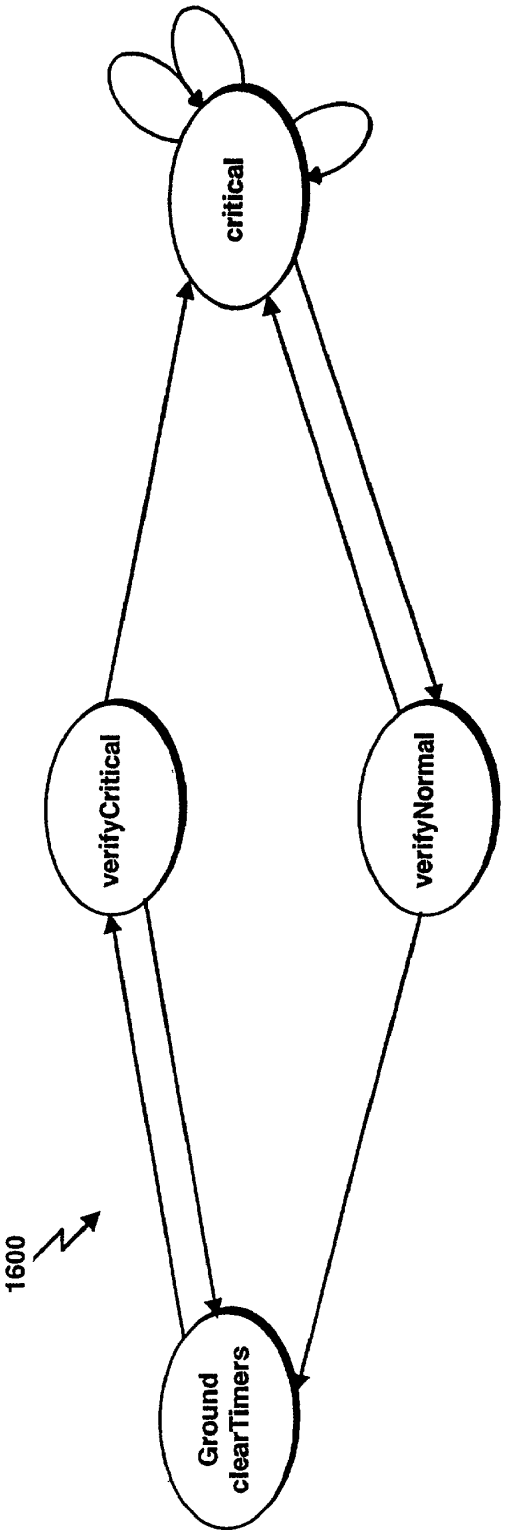
1600
Ground
clearTimers
verifyCritical
verifyNormal
critical

Figure 16

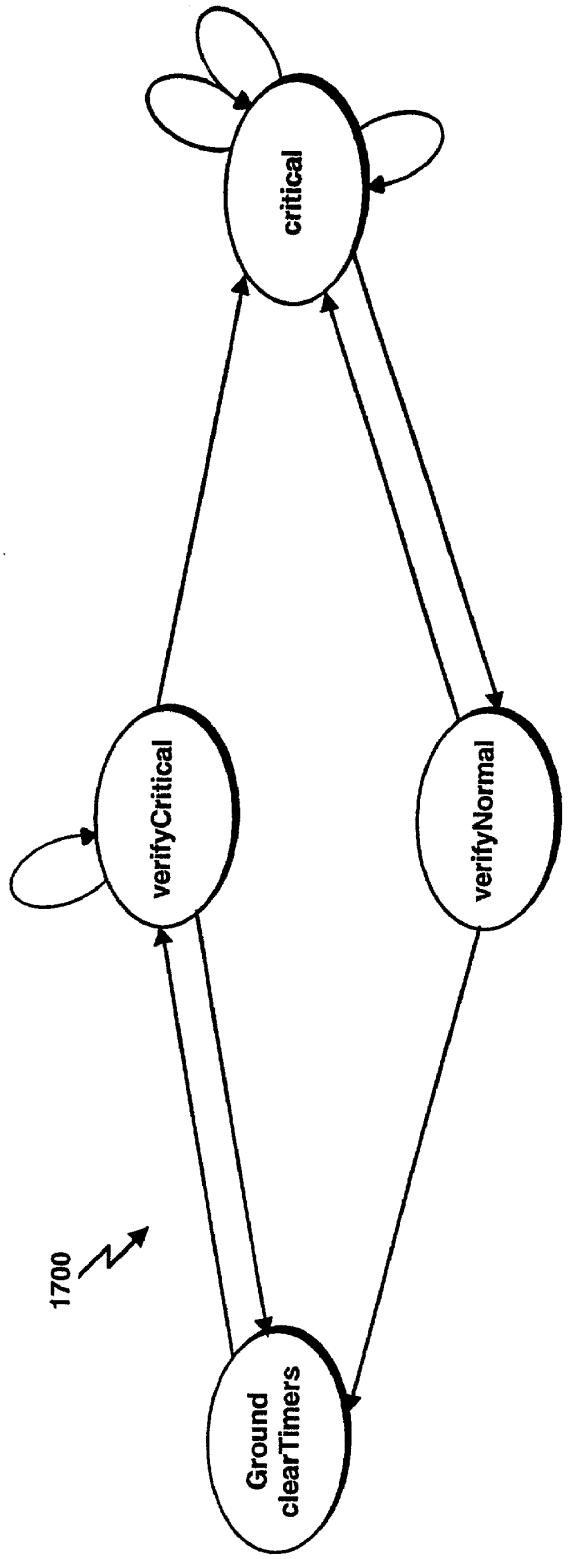
1700
verifyCritical
critical
Ground
clearTimers
verifyNormal

Figure 17

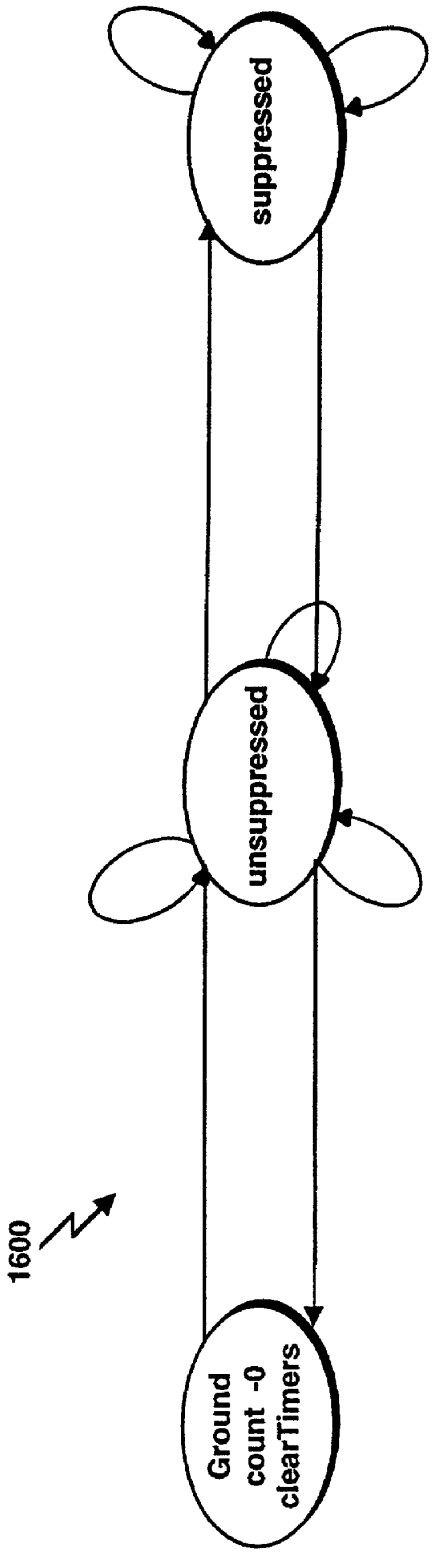

Figure 18

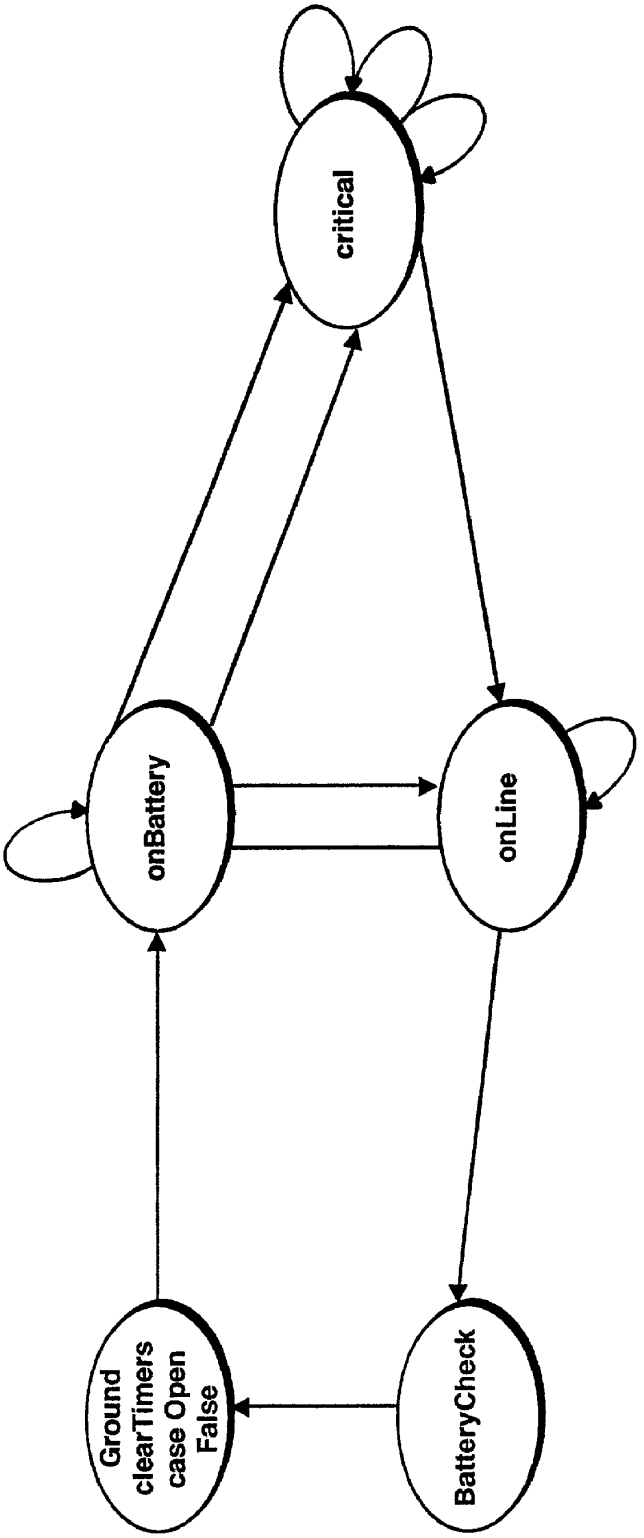
Ground
clearTimers
case Open
False
onBattery
critical
BatteryCheck
onLine

Figure 19

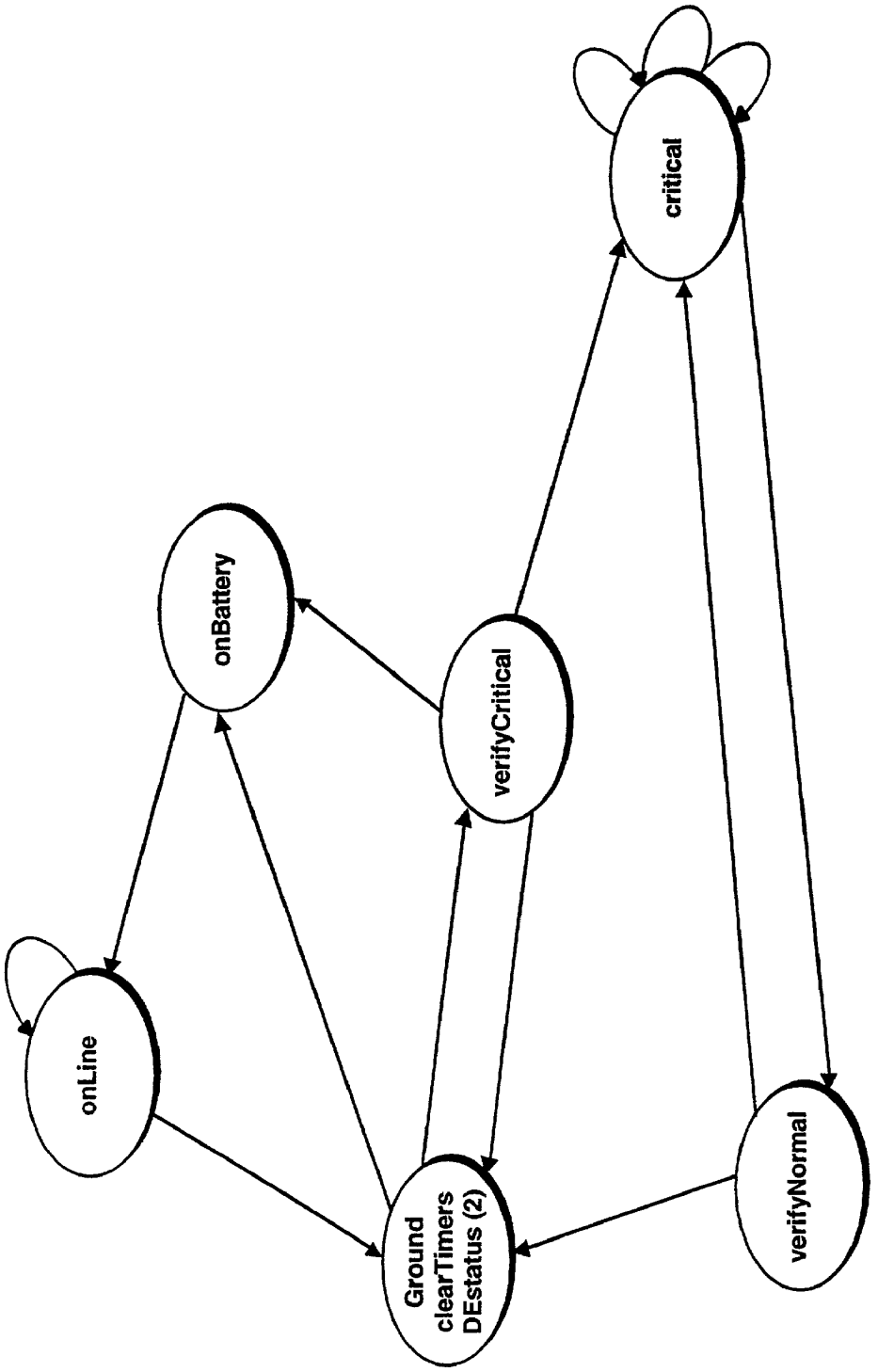
onLine
onBattery
Ground
clearTimers
DEstatus (2)
verifyCritical
critical
verifyNormal

Figure 20

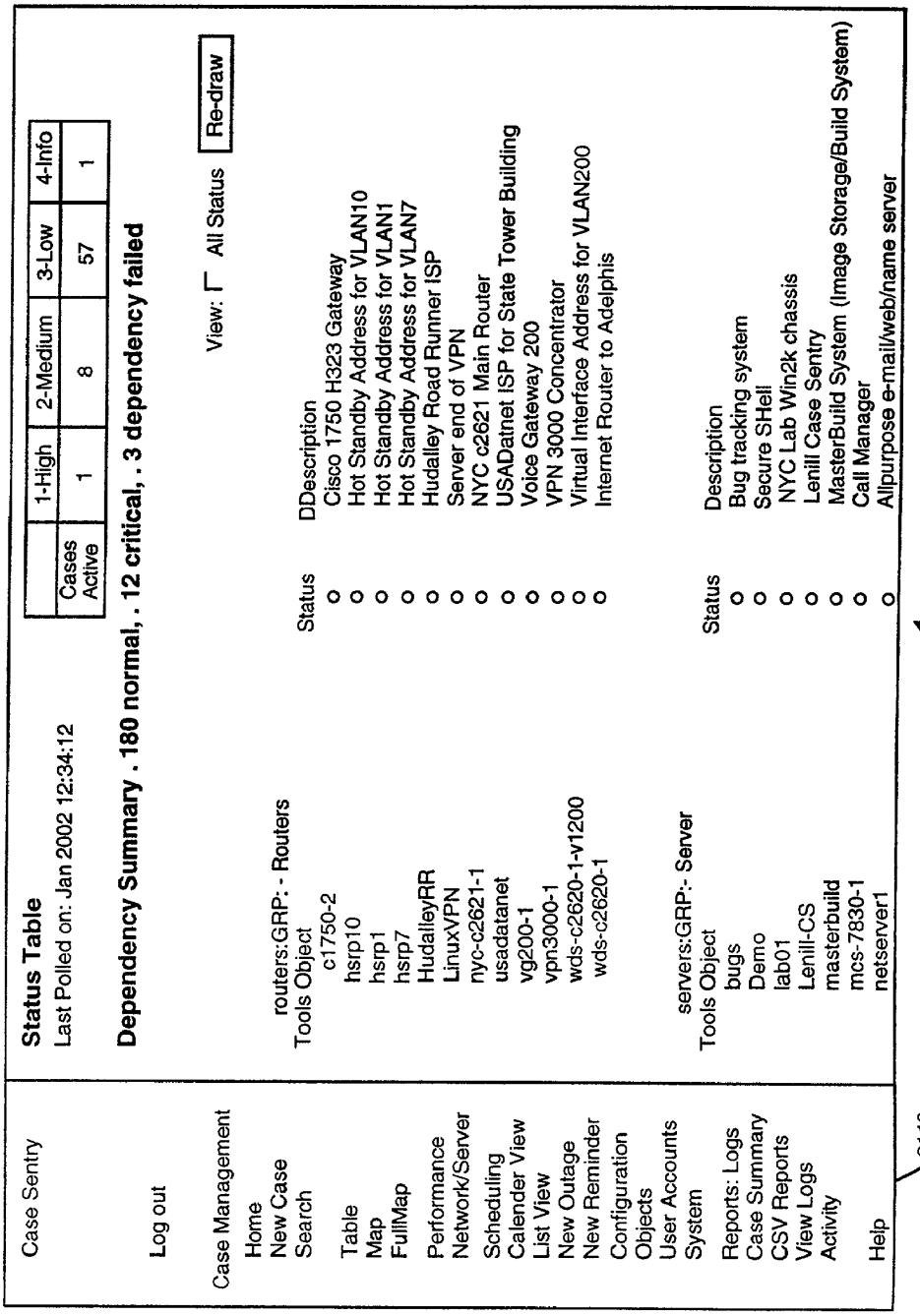
Case Sentry
Log out
Case Management
Home
New Case
Search
Table
Map
FullMap
Performance
Network/Server
Scheduling
Calender View
List View
New Outage
New Reminder
Configuration
Objects
User Accounts
System
Reports: Logs
Case Summary
CSV Reports
View Logs
Activity
Help
2110
Status Table
Last Polled on: Jan 2002 12:34:12
Cases Active
1-High 1
2-Medium 8
3-Low 57
4-Info 1
Dependency Summary . 180 normal, . 12 critical, . 3 dependency failed
View: All Status
Re-draw
routers:GRP: - Routers
Tools Object
Status
DDescription
c1750-2 Cisco 1750 H323 Gateway
hsrp10 Hot Standby Address for VLAN10
hsrp1 Hot Standby Address for VLAN1
hsrp7 Hot Standby Address for VLAN7
HudalleyRR Hudalley Road Runner ISP
LinuxVPN Server end of VPN
nyc-c2621-1 NYC c2621 Main Router
usadatanet USADatnet ISP for State Tower Building
vg200-1 Voice Gateway 200
vpn3000-1 VPN 3000 Concentrator
wds-c2620-1-v1200 Virtual Interface Address for VLAN200
wds-c2620-1 Internet Router to Adelphis
servers:GRP:- Server
Tools Object
Status
Description
bugs Bug tracking system
Demo Secure SHell
lab01 NYC Lab Win2k chassis
Lenill-CS Lenill Case Sentry
masterbuild MasterBuild System (Image Storage/Build System)
mcs-7830-1 Call Manager
netserver1 Allpurpose e-mail/web/name server
2100

Figure 21

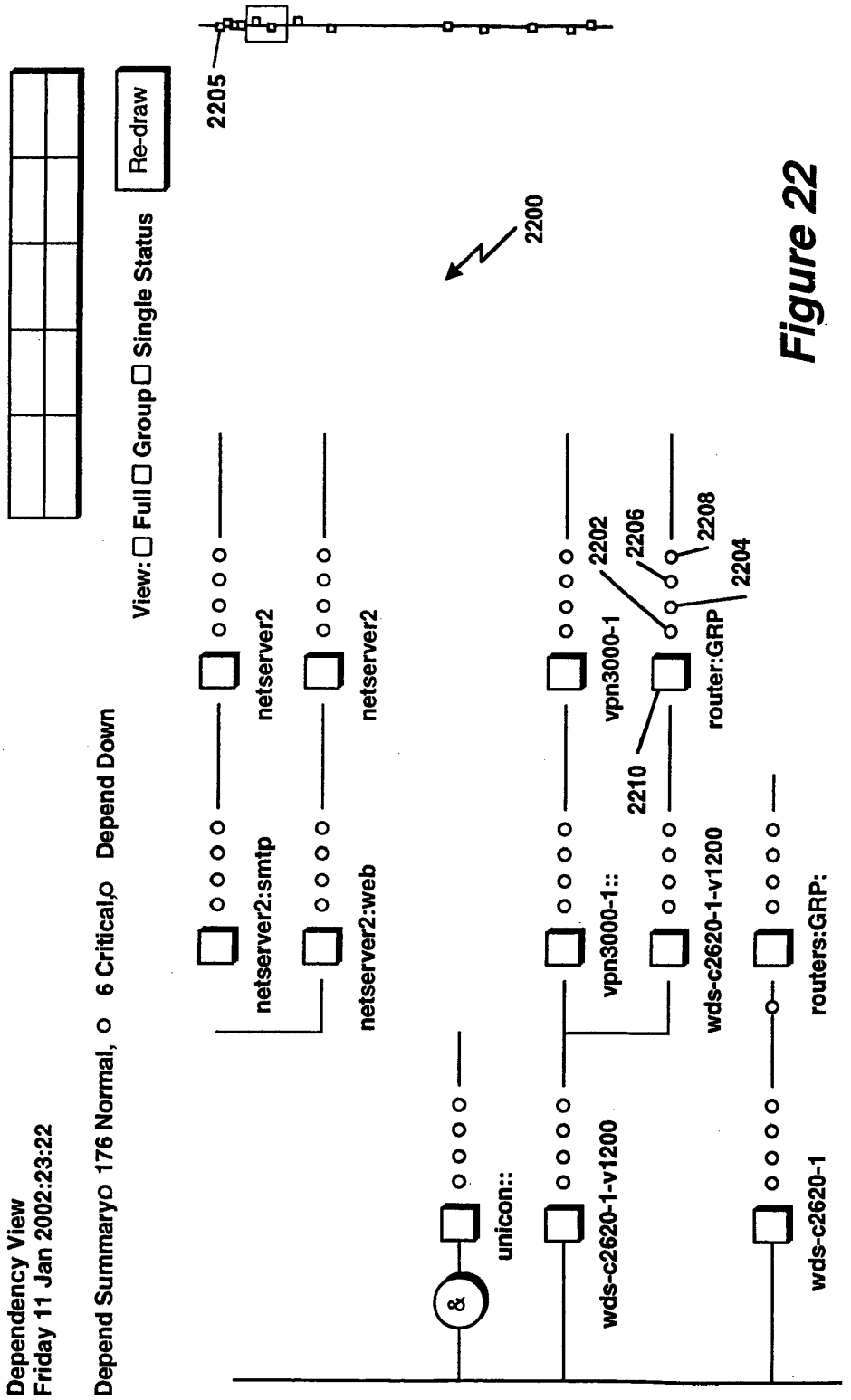
Dependency View
Friday 11 Jan 2002:23:22
Depend Summary 176 Normal, 6 Critical, Depend Down
View: Full Group Single Status
Re-draw
2205
2200
netserver2:smtp
netserver2
netserver2:web
netserver2
unicon::
wds-c2620-1-v1200
vpn3000-1::
vpn3000-1
wds-c2620-1-v1200
router:GRP
wds-c2620-1
routers:GRP:
2202
2206
2208
2204
2210

Figure 22

METHOD AND APPARATUS FOR MAINTAINING THE STATUS OF OBJECTS IN COMPUTER NETWORKS USING VIRTUAL STATE MACHINES

FIELD OF THE INVENTION

This invention relates generally to computer networks and more specifically, to an apparatus and methods for identifying, diagnosing, and documenting problems in computer networks including networking devices, servers, appliances, and network services collectively known as objects.

BACKGROUND OF THE INVENTION

Much prior art has focused on identifying network and/or system fault conditions. Additionally, prior art has used topological network maps and diagnostic tools to display network fault conditions. Such tools have been designed to allow less skilled network administrators to conduct support from a network or system management station. Occasionally, network and/or system management systems interface with an exterior system for the documentation of problems and resolutions. Integration is often problematic requiring extensive manipulation and correlation of alarm conditions prior to problem and problem resolution documentation.

Such a traditional approach is inefficient on several levels. The traditional model assumes an administrator is available to actively monitor the network or system management station. In an environment where adequately trained human resources are unavailable, an administrator dedicated to monitoring the network management system is a luxury many technical staffs do not have. A successful system must therefore identify a fault condition and have an established methodology of contacting the appropriate personnel when a fault condition exists.

The current paradigm for network and system management systems is to represent fault information via a topological map. Typically a change in color (or other visual cue) represents a change in the condition of the network or system. This method, as currently applied, is appropriate when a single layer of the Open Systems Interconnect (OSI) logical hierarchical architecture model can represent the fault condition. For example, a fault condition associated with layer two devices can be adequately represented by a layer two topological map. However, to maintain the current paradigm of representing fault condition topologically, a topology map should present a view of the network consistent with complex multi-layer dependencies. Topological representations of large networks are also problematic. A large network is either squeezed onto a single screen or the operator must zoom in and out of the network to change the view. This common approach ignores known relationships between up and downstream objects in favor of a percentage view of the network, e.g. 100% equals the entire network, 50% equals one-half the network.

Further, adequate documentation and description of a problem or fault conditions and its corresponding resolution is essential but difficult to achieve within the confines of a current network or system management systems. Typically the problem description and problem resolution are documented external to the network or system management system. As a result of using an external system to document problems and their resolution, a dichotomy is created between the machine events in the network management system and the external system which records human intervention. Furthermore, the network management system will

typically generate multiple events for a single object, such association often lost when translated to an external system. Reconciling the machine view of the network management system with that of the external system documenting the problem description/problem resolution is quite often difficult and unsuccessful.

Current network management tools depend upon the discovery of network/system devices associated with the network, typically through discovery of devices at layer two of the OSI model. Thereafter the network is actively rediscovered using the tool to maintain a current view of the network or system.

A need exists for a technique to topologically represent complex multi-layer relationships between managed objects including complex dependencies between objects operating at multiple layers of the OSI model.

A need exists for a technique to discover, maintain and document the current state of the network based on known network/system objects and to detect deviations from the known state of the network and report such discovered deviations as faults.

SUMMARY OF THE INVENTION

The invention discloses a network management appliance and methods for identifying, diagnosing, and documenting problems in computer networks using the appliance. The devices and process available on a network, as well as grouping of the same, are collectively referred to hereafter as "objects". Accordingly, a monitored or managed object may be physical device(s), process(es) or logical associations or the same. The network appliance comprises one or more a polling modules, a decision engine, a database, case management module including a user interface. The network appliance monitors objects throughout the network and communicates their status and/or problems to any number of receiving devices including worldwide web processes, e-mail processes, other computers, PSTN or IP based telephones or pagers.

The Status Poller periodically polls one or more monitored network objects and receives fault responses thereto. The Trap Receiver receives device generated fault messages. Both the Trap Receiver and Status Poller generate and transmit decision requests to the decision engine. The decision engine interacts with the database and the case management module to monitor the status of problems or "cases" which have been opened. The case management module interacts with the various notification devices to provide the status updates and to provide responses to queries.

The status of a monitored object is maintained in memory using a virtual state machine. The virtual state machines are based on one or a plurality of different finite state machine models. The decision engine receives input data, typically event messages, and updates the virtual state machines accordingly. The inventive network appliance records thousands of network states and simultaneously executes thousands of state machines while maintaining a historical record of all states and state machines.

According to a first aspect of the present invention, In a computer system having a processor, memory and a network interface, an apparatus for monitoring a plurality of device or process objects operatively coupled to the computer system over a computer network, the apparatus comprising (a) means for monitoring the status of the plurality of monitored objects over the computer network, (b) a memory for storing a plurality of different finite state machine

models, each finite state machine model comprising (i) a finite set of states, only one of the states being active at a time and referred to as the current state, (ii) a finite set of input events that trigger state changes and execution of actions, (iii) a finite set of transitions, each of which, given a current state and a specific input event, cause a transition of the finite state machine model to a next state, and (iv) a set of actions associated with selected of the finite states; (c) the memory for further storing a virtual state machine associated with each of the plurality of monitored objects, each virtual state machine comprising (i) data identifying the monitored object, (ii) data identifying one of the plurality of finite state machine models, and (iii) data identifying one of the finite states of the identified finite state machine model as a current state of the virtual state machine; and (d) a decision engine, coupled to the means for monitoring and the memory, for receiving input event data relating to one of the monitored objects and for accessing the virtual state machine in memory associated with said one monitored object, the decision engine further configured to manipulate the data identifying the current state of the virtual state machine associated with said one monitored object and for determining which actions associated with the identified finite state machine model should be performed.

According to a second aspect of the present invention, in an apparatus operatively coupled over a computer network to a plurality of device or process objects, a method comprising (a) storing in a memory a plurality of different finite state machine models, each finite state machine model comprising (i) a finite set of states, only one of the states being active at a time and referred to as the current state, (ii) a finite set of input events that trigger state changes and execution of actions, and (iii) a finite set of transitions, each of which, given a current state and a specific input event, cause a transition of the finite state machine model to a next state, (iv) a set of actions associated with one of the states; (b) further storing in the memory a virtual state machine associated with each of the plurality of monitored objects, each virtual state machine comprising (i) data identifying the monitored object, (ii) data identifying one of the plurality of finite state machine models, and (iii) data identifying one of the finite states of the identified finite state machine model as a current state of the virtual state machine; (c) monitoring the status of the plurality of monitored objects over the computer network; (d) receiving input event data relating to one of the monitored objects; (e) accessing the virtual state machine in memory associated with said one monitored object; (f) manipulating the data identifying a current state of the virtual state machine associated with said one monitored object; and (g) executing the actions associated with the identified finite state machine model.

According to a third aspect of the present invention, a memory for storing data to be processed by a data processing system including an apparatus for monitoring a plurality of device or process objects operatively coupled to a data processing system over a computer network, the memory comprising a data structure stored in the memory and usable to maintain a virtual finite state machine associated with one of the monitored objects, the data structure comprising (a) data identifying said one monitored object; (b) data identifying one of a plurality of different finite state machine models, each finite state machine model comprising (i) a finite set of states, only one of the states being active at a time and referred to as a current state, (ii) a finite set of input events that trigger state changes and execution of actions, (iii) a finite set of transitions, each of which, given a current state and a specific input event, cause a transition of the finite state machine model to a next state, and (iv) a set of actions associated with selected of the finite states; (c) data identifying one of the finite states of the identified finite state machine model as a current state of the virtual state machine.

According to a fourth aspect of the present invention, in a computer system having a processor, memory and a network interface, an apparatus for monitoring a plurality of device or process objects operatively coupled to the computer system over a computer network, the apparatus comprising (a) a poller for sending queries to the plurality of monitored objects and for receiving responses therefrom; (b) a trap receiver for receiving traps generated by the monitored objects; (c) a decision engine responsive to decision requests from any of the trap receiver and poller, the decision engine further configured to send a verification query to one of the plurality of monitored objects identified in the decision request and for a receiving response to the verification query; (d) a memory for storing a plurality of different finite state machine models, each finite state machine model comprising finite set of states, only one of the states being active at a time and referred to as the current state; (e) the memory further storing a virtual state machine for each of the monitored objects, each virtual state machine comprising: (i) data identifying the monitored object, (ii) data identifying one of the plurality of finite state machine models, and (iii) data identifying one of the finite states of the identified finite state machine model as a current state of the virtual state machine; and (f) a case management module for receiving requests from the decision engine to open a case related to a monitored object.

BRIEF DESCRIPTION OF THE DRAWINGS

The above and further advantages of the invention may be better understood by referring to the following description in conjunction with the accompanying drawings in which:

FIG. **1** is a block diagram of a prior art computer system suitable for use with the present invention;

FIG. **2** is a conceptual illustration of a network environment in which the present invention may be utilized;

FIG. **3** illustrates conceptually the internal components of the network appliance and external elements within the network environment in accordance with the present invention;

FIG. **4** is a conceptual block diagram of the network management appliance of the present invention illustrating the implementation of the performance monitoring component;

FIG. **5** is a conceptual block diagram of the network management appliance of the present invention illustrating the implementation of the fault monitoring component;

FIG. **6** is a conceptual block diagram illustrating the communication paths between the fault monitoring component of the inventive appliance and the external elements within the network environment;

FIG. **7** is a conceptual block diagram of the decision engine component of the network management appliance of the present invention;

FIG. **8** is a conceptual block diagram of the case management system component of the network management appliance of the present invention;

FIG. **9** is a conceptual block diagram of the notification engine component of the network management appliance of the present invention;

FIG. **10** is a conceptual block diagram illustrating the communication paths between the performance monitoring

component of the inventive appliance and the external elements within the network environment;

FIG. **11** is a conceptual block diagram of a decision engine and the various component modules therein in accordance with the present invention;

FIGS. **12**A–C are conceptual illustrations of a state machine and hypothetical states in accordance with the present invention;

FIG. **13** illustrates a user interface diagram identifying a target monitored network device and monitored parent and child devices within the network environment in accordance with the present invention;

FIG. **14** illustrates a user interface diagram identifying a target monitored network device and monitored parent and child devices within the network environment in accordance with the present invention;

FIG. **15** illustrates a user interface status map including a microview of the network and a macroview of a selected portion of the network, in accordance with the present invention;

FIGS. **16**–**20** are conceptual illustrations of a state machine models and their respective states in accordance with the present invention;

FIG. **21** illustrates a user interface status table in accordance with the present invention; and

FIG. **22** illustrates a user interface status map including the dependency relationships of a target object and various status parameters for each object shown with multiple iconic representations.

DETAILED DESCRIPTION

FIG. **1** illustrates the system architecture for a computer system **100**, such as a Dell Dimension 8200, commercially available from Dell Computer, Dallas Tex., on which the invention can be implemented. The exemplary computer system of FIG. **1** is for descriptive purposes only. Although the description below may refer to terms commonly used in describing particular computer systems, the description and concepts equally apply to other systems, including systems having architectures dissimilar to FIG. **1**.

The computer system **100** includes a central processing unit (CPU) **105**, which may include a conventional microprocessor, a random access memory (RAM) **110** for temporary storage of information, and a read only memory (ROM) **115** for permanent storage of information. A memory controller **120** is provided for controlling system RAM **110**. A bus controller **125** is provided for controlling bus **130**, and an interrupt controller **135** is used for receiving and processing various interrupt signals from the other system components. Mass storage may be provided by diskette **142**, CD ROM **147** or hard drive **152**. Data and software may be exchanged with computer system **100** via removable media such as diskette **142** and CD ROM **147**. Diskette **142** is insertable into diskette drive **141** which is, in turn, connected to bus **130** by a controller **140**. Similarly, CD ROM **147** is insertable into CD ROM drive **146** which is connected to bus **130** by controller **145**. Hard disk **152** is part of a fixed disk drive **151** which is connected to bus **130** by controller **150**.

User input to computer system **100** may be provided by a number of devices. For example, a keyboard **156** and mouse **157** are connected to bus **130** by controller **155**. An audio transducer **196**, which may act as both a microphone and a speaker, is connected to bus **130** by audio controller **197**, as illustrated. It will be obvious to those reasonably skilled in the art that other input devices such as a pen and/or tablet and a microphone for voice input may be connected to computer system **100** through bus **130** and an appropriate controller/software. DMA controller **160** is provided for performing direct memory access to system RAM **110**. A visual display is generated by video controller **165** which controls video display **170**. Computer system **100** also includes a network adapter **190** which allows the system to be interconnected to a local area network (LAN) or a wide area network (WAN), schematically illustrated by bus **191** and network **195**.

Computer system **100**–**102** are generally controlled and coordinated by operating system software. The operating system controls allocation of system resources and performs tasks such as process scheduling, memory management, and networking and I/O services, among other things. In particular, an operating system resident in system memory and running on CPU **105** coordinates the operation of the other elements of computer system **100**. The present invention may be implemented with any number of commercially available operating systems including UNIX, Windows NT, Windows 2000, Windows XP, Linux, Solaris, etc. One or more applications **220** such as the inventive network management application may execute under control of the operating system **210**. If operating system **210** is a true multitasking operating system, multiple applications may execute simultaneously.

In the illustrative embodiment, the present invention may be implemented using object-oriented technology and an operating system which supports execution of object-oriented programs. For example, the inventive system may be implemented using a combination of languages such as C, C++, Perl, PHP, Java, HTML, etc., as well as other object-oriented standards.

In the illustrative embodiment, the elements of the system are implemented in the C++ programming language using object-oriented programming techniques. C++ is a compiled language, that is, programs are written in a human-readable script and this script is then provided to another program called a compiler which generates a machine-readable numeric code that can be loaded into, and directly executed by, a computer. As described below, the C++ language has certain characteristics which allow a software developer to easily use programs written by others while still providing a great deal of control over the reuse of programs to prevent their destruction or improper use. The C++ language is well-known and many articles and texts are available which describe the language in detail. In addition, C++ compilers are commercially available from several vendors including Borland International, Inc. and Microsoft Corporation. Accordingly, for reasons of clarity, the details of the C++ language and the operation of the C++ compiler will not be discussed further in detail herein. The program code used to implement the present invention may also be written in scripting languages such as Perl, Java Scripts, or non-compiled PHP. If required, the non-compiled PHP can be converted to machine readable format.

Network Communication Environment

FIG. **2** illustrates a telecommunications environment in which the invention may be practiced such environment being for exemplary purposes only and not to be considered limiting. Network **200** of FIG. **2** illustrates a hybrid telecommunication environment including both a traditional public switched telephone network as well as packet-switched data network, such as the Internet and Intranet networks and apparatus bridging between the two. The elements illustrated in FIG. **2** are to facilitate an understanding of the invention. Not every element illustrated in FIG. **2**

or described herein is necessary for the implementation or the operation of the invention.

Specifically, a packet-switched data network **202** comprises a network appliance **300**, a plurality of processes **302**–**306**, plurality of monitored devices **314***a*–*n*, external databases **310***a*–*n*, external services **312** represented by their respective TCP port, and a global network topology **220**, illustrated conceptually as a cloud. One or more of the elements coupled to global network topology **220** may be connected directly through a dedicated connection, such as a T1, T2, or T3 connection or through an Internet Service Provider (ISP), such as America On Line, Microsoft Network, Compuserve, etc.

A gateway **225** connects packet-switched data network **202** to circuit switched communications network **204** which includes a central office **210** and one or more traditional telephone terminating apparatus **308***a*–*n*. Circuit switched communications network **204** may also include, although not shown, a traditional PSTN toll network with all of the physical elements including PBXs, routers, trunk lines, fiber optic cables, other central offices etc. Terminating apparatus **308***a*–*n* may be implemented with either a digital or analog telephone or any other apparatus capable of receiving a call such as modems, facsimile machines, cellular telephones, etc., such apparatus being referred to collectively hereinafter as a terminating apparatus, whether the network actually terminates. Further, the PSTN network may be implemented as either an integrated services digital network (ISDN) or a plain old telephone service (POTS) network.

Each network consists of infrastructure including devices, systems, services and applications. Manageable network components utilize management mechanisms that follow either standard or proprietary protocols. Appliance **300** supports multiple interfaces to manageable devices from various points within its architecture, providing the flexibility to monitor both types of network components.

Components that can be managed using standard or public protocols (including items such as routers, switches, servers, applications, wireless devices, IP telephony processes, etc.) are designed under the premise that such components would reside in networks where a network management system is deployed. Such devices typically contain a MIB (Management Information Base), which is a database of network management information that is used and maintained by a common network management protocol such as SNMP (Simple Network Management Protocol). The value of a MIB object can be retrieved using SNMP commands from the network management system. Appliance **300** monitors the raw status events from such infrastructure directly using various standard protocol queries through a Status Poller **330** and a Trap Receiver **332**, as explained hereinafter.

Network components that were not designed with network management applications may have internal diagnostics capabilities that make it possible to generate an alarm or other data log. This data may be available via an interface and/or format that is proprietary in nature. Such systems may also have the ability to generate log files in text format, and make them available through supported interfaces such as e-mail. If event processing capability is needed, appliance **300** can monitor such network components through custom status plug-ins modules.

Network Appliance Overview

In the illustrative embodiment, except for specific interface hardware, network appliance **300**, referred to hereafter as simply as "appliance **300**", may be implemented as part of an all software application which executes on a computer architecture similar to that described with reference to FIG. **1**. As illustrated in FIGS. **3**–**5**, appliance **300** can communicate either directly or remotely with any number of devices, or processes, including the a worldwide web processes **302**, a Personal Digital Assistant **304**, an e-mail reader process **306**, a telephone **308**, e.g., either a traditional PSTN telephone or an IP-enabled telephony process **311**, and/or a pager apparatus **310**. In addition, appliance **300** can communicate either directly or remotely with any number of external management applications **312** and monitored devices **314**. Such communications may occur utilizing the network environment illustrated in FIG. **2** or other respective communication channels as required by the receiving or process.

Appliance **300** monitors network objects, locates the source of problems, and facilitates diagnostics and repair of network infrastructure across the core, edge and access portions of the network. In the illustrative embodiment, appliance **300** comprises a status monitoring module **318**, a performance monitoring module **316**, a decision engine **324**, a case management module **326** and database **348**. The implementations of these modules as well as their interaction with each other and with external devices is described hereafter in greater detail.

The present invention uses a priori knowledge of devices to be managed. For example, a list of objects to be monitored may be obtained from Domain Name Server. The desired objects are imported into the appliance **300**. The relationships between imported objects may be entered manually or detected via an existing automated process application. In accordance with the paradigm of the invention, any deviation from the imported network configuration is considered a fault condition requiring a modification of the source data. In this manner the network management appliance **300** remains in synchronization with the source data used to establish the network configuration.

Status Monitoring Module

A Status Monitoring Module **318** comprises a collection of processes that perform the activities required to dynamically maintain the network service level, including the ability to quickly identify problems and areas of service degradation. Specifically, Status Monitoring Module **318** comprises Status Poller Module **330**, On-Demand Status Poller **335**, Status Plug-Ins **391**, Bulk Plug-In Poller **392**, Bulk UDP Poller **394**, Bulk if OperStatus Poller **396**, Bulk TCP Poller **398**, Bulk ICMP Poller **397**, Trap Receiver **332**, Status View Maintenance Module **385**, and Status Maps and Tables Module **387**.

Polling and trapping are the two primary methods used by appliance **300** to acquire data about a network's status and health. Polling is the act of asking questions of the monitored objects, i.e., systems, services and applications, and receiving an answer to those questions. The response may include a normal status indication, a warning that indicates the possibility of a problem existing or about to occur, or a critical indication that elements of the network are down and not accessible. The context of the response determines whether further appliance **300** action is necessary. Trapping is the act of listening for a message (or trap) sent by the monitored object to appliance **300**. These trap messages contain information regarding the object, its health, and the reason for the trap being sent.

A plurality of plug-ins and pollers provide the comprehensive interface for appliance **300** to query managed objects in a network infrastructure. Such queries result in appliance **300** obtaining raw status data from each network object, which is the first step to determining network status

and health. The various plug-ins and pollers operate in parallel, providing a continuous and effective network monitoring mechanism. Pollers may utilize common protocols such as ICMP (Ping), SNMP Get, Telnet, SMTP, FTP, DNS, POP3, HTTP, HTTPS, NNTP, etc. As a network grows in size and complexity, the intelligent application of polling and trapping significantly enhances system scalability and the accuracy of not only event detection, but also event suppression in situations where case generation is not warranted.

Status Poller

Fault detection capability in appliance **300** is performed by Status Poller **330** and various poller modules, working to effectively monitor the status of a network. Status Poller **330** controls the activities of the various plug-ins and pollers in obtaining status information from managed devices, systems, and applications on the network. FIG. **6** illustrates the status flow between network appliance **300** and external network elements. Status Poller **330** periodically polls one or more monitored devices **314**A–N. Status Poller **330** generates a fault poll query to a monitor device **314** and receives, in return, a fault poll response. The fault poll queries may be in the form of any of a ICMP Echo, SNMP Get, TCP Connect or UDP Query. The fault poll response may be in the form of any of a ICMP Echo Reply, SNMP Response, TCP Ack or UDP Response. Status Poller **330** may also receive a fault data request in URL form from web process **302**. In response, Status Poller **330** generates and transmits fault data in HTML format to web process **302**. Status Poller **330** generates decision requests for decision engine **334** in the form of messages. In addition, Status Poller **332** receives external data from an external management application **312**. Trap Receiver **332** receives device generated fault messages from monitored devices **314**. Both Trap Receiver **332** and Status poller **330** generate decision requests for decision engine **334** in the form of messages.

Status Poller **330** determines the needed poll types, segregates managed objects accordingly, and batch polls objects where possible. A Scheduler **373** triggers the Status Poller **330** to request polling at routine intervals. During each polling cycle, each monitored object is polled once. If any objects test critical, all remaining normal objects are immediately polled again. A Dependency Checker module which is part of the Root Cause Analysis Module determines which objects have changed status from the last time the Status Poller **330** was run, and determines, using the current state objects and the parent/child relation data, which objects are "dependency down" based on their reliance on an upstream object that has failed. This process repeats until there are no new critical tests found. Once the polling cycle is stable, a "snapshot" of the network is saved as the status of the network until the next polling cycle is complete. The network status information obtained is written into database **352** for use by other processes, such as the Decision Engine **334** when further analysis is required.

Polling a network for status information is an effective method of data gathering and provides a very accurate picture of the network at the precise time of the poll, however, it can only show the state of the network for that moment of time. Network health is not static. A monitored object can develop problems just after is has been polled and reflected a positive operational result. Moreover, this changed status will not be known until the device is queried during the next polling cycle. For this reason appliance **300** also incorporates the use of the Trap Receiver **332** to provide near real-time network status details.

Trap Receiver

A trap is a message sent by an SNMP agent to appliance **300** to indicate the occurrence of a significant event. An event may be a defined condition, such as a link failure, device or application failure, power failure, or a threshold that has been reached. Trapping provides a major incremental benefit over the use of polling alone to monitor a network. The data is not subject to an extended polling cycle and is as real-time as possible. Traps provide information on only the object that sent the trap, and do not provide a complete view of network health. Appliance **300** receives the trap message via Trap Receiver **332** immediately following the event occurrence. Trap Receiver **332** sends the details to Status View Maintenance Module **385**, which requests the Status Poller **330** to query the network to validate the event and locate the root cause of the problem. Confirmed problems are passed to Case Management Module **326** to alert network management personnel.

The On-Demand Status Poller **335** provides status information to Decision Engine **334** during the verification stage. Unlike the Status Poller **330**, On-Demand Status Poller **335** only polls the objects requested by the Decision Engine **334**. Since this is usually a small subset of objects, the status can typically be found more quickly. The responses from these polls are fed back to the Decision Engine **334** for further processing and validation.

The Status View Maintenance Module **385** provides a gateway function between the Status Poller **330**, and Root Cause Analysis and the Decision Engine Modules. The Status View Maintenance Module **385** controls the method by which network status information is created, maintained, and used. It serves as the primary interface for the depiction of network status details in the Status Maps and Status Table **387**. Detailed object status information is presented through four (4) statuses: raw, dependency, decision, and case.

The Status Maps and Tables Module **387** is used to generate representations of complex relationships between network devices, systems, services and applications. Status Maps and Tables Module **387** works in conjunction with web server application **381** using known techniques and the HTML language to provide a web accessible user interface to the data contained in database **352**. A Status Map depict the precise view of managed objects and processes as defined during the implementation process. The Status Map provides a fast and concise picture of current network issues, providing the ability to determine the specific source of network failure, blockage or other interference. Users can zoom to the relevant network view, and launch an object-specific Tools View that assists in the diagnostics and troubleshooting process and may include links to third party management tools, such as Cisco Resource Manager Essentials (RME), etc.

A Status Table enables a tabular view of managed network infrastructure. All managed network components **314** can be displayed individually, or assembled under categories according to device type, location, or their relationship to the monitoring of Groups of objects representing complete processes or other logical associations. As described in the User Interface section hereafter, a series of unique status icons clearly depict the operational state of each object, with the option to include more comprehensive status views including greater details on the various process elements for managed objects.

Status Plug-Ins/Bulk Pollers

As will be understood by those skilled in the arts, a plug-in, as used herein, is a file containing data used to alter, enhance, or extend the operation of an parent application

program. Plug-ins facilitate flexibility, scalability, and modularity by taking the input from the a proprietary product and interfacing it with the intended application program. Plug-in modules typically interface with Application Program Interfaces (API) in an existing program and prevent an application publisher from having to build different versions of a program or include numerous interface modules in the program. In the present invention plug-ins are used to interface the status poller **335** with monitored objects **314**.

The operation of plug-ins and bulk pollers is conducted at routine intervals by the Status Poller Module **330**, and, on an as-needed basis, by the request of the On-Demand Status Poller Module **335**. In the illustrative embodiment, the primary status plug-ins and pollers include Status Plug-Ins **391**, Bulk Plug-In Poller **392**, Bulk UDP Poller **394**, Bulk if OperStatus Poller **396**, Bulk TCP Poller **398** and Bulk ICMP Poller **397**.

Status Plug-Ins **391** conduct specific, individual object tests. Bulk Plug-In Poller **392** makes it possible to conduct multiple simultaneous tests of plug-in objects. Unlike many network management systems that rely solely on individual object tests, the Bulk Plug-In Poller **392** enables a level of monitoring efficiency that allows appliance **300** to effectively scale to address larger network environments, including monitoring via SNMP (Simple Network Management Protocol). Used almost exclusively in TCP/IP networks, SNMP provides a means to monitor and control network devices, and to manage configurations, statistics collection, performance, and security.

Bulk UDP Poller **394** is optimized to poll for events relating to UDP (User Datagram Protocol) ports only. UDP is the connectionless transport layer protocol in the TCP/IP protocol stack. UDP is a simple protocol that exchanges datagrams without acknowledgments or guaranteed delivery, requiring that error processing and retransmission be handled by other protocols. Bulk UDP Poller **394** permits multiple UDP polls to be launched within the managed network.

Bulk if OperStatus Poller **396** monitors network infrastructure for the operational status of interfaces. Such status provides information that indicates whether a managed interface is operational or non-operational.

Bulk TCP Poller **398** polls for events relating to TCP (Transmission Control Protocol) ports only. Part of the TCP/IP protocol stack, this connection-oriented transport layer protocol provides for full-duplex data transmission. Bulk TCP Poller **398** permits multiple TCP polls to be launched within the managed network.

Bulk ICMP Poller **397** performs several ICMP (ping) tests in parallel. Bulk ICMP Poller **397** can initiate several hundred tests without waiting for any current tests to complete. Tests consists of an ICMP echo-request packet to an address. When an ICMP echo-reply returns, the raw0 status is deemed normal. Any other response or no answer within a set time generates a new echo-request. If an ICMP echo-reply is not received after a set number of attempts, the raw status is deemed critical. The time between requests (per packet and per address), the maximum number of requests per address, and the amount of time to wait for a reply are tunable by the network administrator using appliance **300**.

Performance Monitoring Module

The primary component of performance monitoring module **316** is performance poller **322**. Performance poller **322** is the main device by which appliance **300** interacts with monitored device(s) **314***a–n* and is responsible for periodically monitoring such devices and reporting performance statistics thereon. Performance poller **322** is operatively coupled to application(s) **312**, monitored device(s) **314**, decision engine **334** and web process(es) **302**. FIG. **10** illustrates the communication flow between the performance poller **322** and decision engine **334**, as well as external elements. Performance poller **322** polls monitored device(s) **314***a–n* periodically for performance statistics. Specifically, performance poller **322** queries each device **314** with an SNMP Get call in accordance with the SNMP standard. In response, the monitored device **314** provides a performance poll response to performance poller **322** in the form of an SNMP Response call, also in accordance with the SNMP standard. Based on the results of the performance poll response, performance poller **322** generates and transmits decision requests to decision engine **334** in the form of messages. Such decision requests may be generated when i) a specific performance condition occurs, ii) if no response is received within predefined threshold, or iii) if other criteria are satisfied. Decision engine **334** is described in greater detail hereinafter. In addition, one or more external management applications **312** provide external management data to performance poller **322** in the form of messages.

In the illustrative embodiment, performance poller **322** may have an object-oriented implementation. Performance poller **322** receives external data from applications **312** through message methods. Such external applications may include Firewalls, Intrusion Detection Systems (IDS), Vulnerability Assessment tools, etc. Poller **322** receives performance data requests from web process **302** via Uniform Resource Locator (URL) methods. In response, poller **322** generates performance data for web process **302** in the form of an HTML method. In addition, poller **322** receives performance poll response data from a monitored device **314** in the form of an SNMP response method. In addition, poller **322** receives performance poll response data from a monitored device **314** in the form of an SNMP response method. As output, poller **322** generates a performance poll query to a monitored device **314** in the form of an SNMP Get method. Performance poller **322** generates decision requests to decision engine **334**, in the form of a message.

Performance Poller **322** obtains performance data from network devices and applications, creating a comprehensive database of historical information from which performance graphs are generated through the user interface of appliance **300**, as described hereafter. Such graphics provide network management personnel with a tool to proactively monitor and analyze the performance and utilization trends of various devices and applications throughout the network. In addition, the graphs can be used for diagnostics and troubleshooting purposes when network issues do occur.

A series of device-specific Performance Plug-Ins **321** serve as the interface between the Performance Poller **322** and managed network objects. The performance criteria monitored for each component begins with a best practices of network management approach. This approach defines what elements within a given device or application will be monitored to provide for the best appraisal of performance status. The managed elements for each device or application type are flexible, allowing for the creation of a management environment that reflects the significance and criticality of key infrastructure. For instance, should there be an emphasis to more closely monitor the network backbone or key business applications such as Microsoft® Exchange, a greater focus can be placed on management of this infrastructure by increasing the performance criteria that is monitored. Likewise, less critical infrastructure can be effec-

tively monitored using a smaller subset of key performance criteria, while not increasing the management complexity caused by showing numerous graphs that are not needed.

Once the performance management criterion is established, the Performance Plug-Ins are configured for each managed device and application. Performance elements monitored may include, but are not limited to, such attributes as CPU utilization, bandwidth, hard disk space, memory utilization, or temperature. Appliance **300** continuously queries managed or monitored objects **314** at configured intervals of time, and the information received is stored as numeric values in database.

Event Processing

The appliance **300** architecture comprises sophisticated event processing capability that provides for intelligent analysis of raw network event data. Instead of accumulating simple status detail and reporting all network devices that are impacted, appliance **300** attempts to establish the precise cause of a network problem delivering the type and level of detail that network management personnel require to quickly identify and correct network issues. The primary components of event processing capability in appliance **300** are the Root Cause Analysis Module **383** and the Decision Engine **334**.

Root Cause Analysis

When a change in network status is observed that may indicate an outage or other issue, the Status Poller **330** presents the to the Root Cause Analysis module **383** for further evaluation. During the course of a network problem or outage, this may consist of tens or even hundreds of status change event messages. These numerous events may be the result of a single or perhaps a few problems within the network.

The Root Cause Analysis Module **383** works directly with the Decision Engine **334** during the event evaluation process. Appliance **300** first validates the existence of an event and then identifies the root cause responsible for that event. This process entails an evaluation of the parent/child relationships of the monitored object within the network. The parent/child relationships are established during the implementation process of appliance **300**, where discovery and other means are used to identify the managed network topology. A parent object is a device or service that must be functional for a child device or service to function. A child object is a device or service that has a dependency on a parent device or service to be functional. Within a network environment a child object can have multiple parent objects, and a parent object can have multiple children objects. In addition, the parent and child objects to a node or monitored object may be located at the same or different layers of the OSI network protocol model across the computer network. Because of this, a Dependency Checker function within Root Cause Analysis Module **383** performs a logical test on every object associated with a monitored object in question to isolate the source of the problem. When appliance **300** locates the highest object in the parent/child relationship tree that is affected by the event it has found the root cause of the problem.

Case Management System

The Case Management system **336** is an integral component of appliance **300** and provides service management functionality. Whereas the Decision Engine **334** works behind the scenes to identify and validate faults, Case Management system **336** is the interface and tool used to manage information associated with the state of the network. Case Management system **336** provides a process tool for managing and delegating workflow as it relates to network problems and activities. The Case Management generates service cases (or trouble tickets) for presentation and delivery to network management personnel.

Case management system **336** comprises a CMS application module **350**, a database **352**, a notification engine **356** and an escalation engine **354**, as illustrated. CMS application module **350** comprises one or more applications and perform the CMS functionality, as explained hereinafter. CMS applications **350** receive CMS requests, in the form of URL identifiers from decision engine **334**. In response, CMS applications **350** generate and transmit notification requests to notification engine **356**, in the form of messages. CMS applications **350** generate and transmit CMS data to a worldwide web process **302** in the form of HTML data. Database **352** receives CMS queries from CMS applications **350** in the form of messages and generates in response thereto a CMS response in the form of a message, as well. In addition, database **352** receives notification queries from notification client **364**, in the form of messages and generates, in response there, notification responses to notification client **364** in the form of messages as well.

Case Management system **336** accommodates Auto cases and Manual cases. Cases passed to the Case Management System from the Decision Engine Module appear as Auto-Cases. These system-generated cases are associated with a network problem. Appliance **300** has determined that the node referenced in the case is a device responsible for a network problem, based on the findings of Root Cause Analysis and the Decision Engine **334**. The Auto Case is automatically assigned an initial priority level that serves until the case is reviewed and the priority is modified to reflect the significance of the problem relative to the network impact and other existing cases being handled.

Cases entered into Case Management system **336** by the network manager or network management personnel are called Manual Cases. This supports the generation, distribution, and tracking of network work orders, or can aid in efforts such as project management. Using a web browser, personnel can obtain the case data from either on-site or remote locations, and access a set of device-specific tools for diagnostics and troubleshooting. Unlike other general-purpose trouble ticketing systems, the appliance **300** has case management capabilities are specifically optimized and oriented to the requirements of network management personnel. This is reinforced in both the types and level of information presented, as well as the case flow process that reflects the specific path to network issue resolution. Opening a case that has been generated shows the comprehensive status detail such as the impacted network node, priority, case status, description, and related case history. The network manager or other personnel can evaluate the case and take the action that is appropriate. This may include assigning the case to a network engineer for follow-up, or deleting the case if a device has returned to fully operational status.

The main Case Management screen of the user interface provides a portal through web server application **381** from which all current case activity can be viewed, including critical cases, current priority status, and all historical cases associated to the specific object. Case data is retained in appliance **300** to serve as a valuable knowledge-base of past activity and the corrective actions taken. This database is searchable by several parameters, including the ability to access all cases that have pertained to a particular device. A complete set of options is available to amend or supplement a case including: changing case priority; setting the case status; assigning or re-assigning the case to specific person-

nel; correlating the case to a specific vendor case or support tracking number, and updating or adding information to provide further direction on actions to be taken or to supplement the case history.

Escalation engine **354** tracks escalations and requests notifications as needed. Escalation engine **354** generates and transmits escalation queries to database **352** in the form of messages and receives, in response thereto, escalation responses in the forms of messages. In addition, escalation engine **354** generates and transmits notification requests, in the form of messages, to notification server **360** of notification engine **356**, in the form of messages. Automated policy-based and roles-based case escalation processes ensure that case escalations are initiated according to defined rules and parameters. Cases not responded to within pre-established time periods automatically follow the escalation process to alert management and other networking personnel of the open issue.

Notification Engine

When a new auto case or manual case is generated or updated, appliance **300** initiates a notification process to alert applicable network personnel of the new case. This function is provided through Notification Engine **356**. Appliance **300** utilizes a configurable notification methodology that can map closely an organization's specific needs and requirements. Appliance **300** incorporates rules- and policy-based case notification by individual, role, or Group, and includes additional customizability based on notification type and calendar. Supported notification mechanisms include various terminal types supporting the receipt of standard protocol text messaging or e-mail, including personal computer, text pager, wireless Personal Digital Assistant (PDA), and mobile phones with messaging capability. The e-mail or text message may contain the important details regarding the case, per the notification content format established in system configuration.

As illustrated in FIG. **9**, notification engine **356** comprises notification server **360**, database **352**, notification client **364**, paging client **366**, paging server **367**, Interactive Voice Response (IVR) server **368** and SMTP mail module **369**. Notification engine **356** generates notifications via e-mail and pager as necessary. Notification server **360** accepts notification requests, determines notification methods, and stores notifications in database **352**. As stated previously, notification server **360** receives notification requests from CMS applications **350**. Notification server generates and transmits Point Of Contact (POC) queries in the form of messages to database **352** and receives, in response thereto, POC responses, also in the form of messages. Notification client **364** generates notifications using appropriate methods. Notification client **364** generates and transmits notification queries, in the form of messages, to database **352** and receives in response thereto notification responses, also in the form of messages. In addition, notification client **364** generates and transmits page requests in the form of messages to paging client **366**. Notification client **364** further generates, in the form of messages, IVR requests to IVR server **368** and e-mail messages to SMTP mail module **369**. Paging client **366** receives page requests from notification client **364** and forwards the page requests onto page server **367**. Paging server **367** generates pager notifications, in the form of messages, to a pager device **310**. Paging server **367** accesses a TAP terminal via a modem or uses the Internet to forward the pager notification. IVR server **368** receives IVR requests and calls phone **308** via an IVR notification in the form of a telephone call which may be either packet-switched or circuit-switched, depending on the nature of the terminating apparatus and the intervening network architecture. SMTP mail module **369** processes notifications via e-mail and acts as a transport for paging notifications. SMTP mail module **369** generates messages in the form of e-mail notifications to e-mail process **306** and PDA notifications to personal digital assistant device **304**.

Decision Engine

Decision Engine **334** is an extensible and scaleable system for maintaining programmable Finite State Machines created within the application's structure. Decision Engine **334** is the portion of system architecture that maintains the intelligence necessary to receive events from various supporting modules, for the purpose of verifying, validating and filtering event data. Decision Engine **334** is the component responsible for reporting only actual confirmed events, while suppressing events that cannot be validated following the comprehensive analysis process.

Referring to FIG. **7**, decision engine **334** comprises, in the illustrative embodiment, a queue manager **340**, decision processor **344**, case generator **346**, database **352** and one or more plug in modules **342**. As illustrated, decision engine **334** receives decision requests from any of Performance poller **322**, Status Poller **330** or Trap Receiver **332**, in the form of messages. A queue manager **340** manages the incoming decision requests in a queue structure and forwards the requests to decision processor **344** in the form of messages. Decision processor **344** verifies the validity of any alarms and thresholds and forwards a generation request to case generator request **346** in the form of a message. Case generator **346**, in turn, compiles cases for verification and database information and generates a CMS request which is forwarded to case management system **336**, described in greater detail hereinafter.

In addition, decision processor **344** generates and transmits device queries in the form of messages to database **352**. In response, database **352** generates a device response in the form of message back to decision processor **344**. Similarly, decision processor **344** generates and transmits verification queries in the form of messages to plug in module **342**. In response, module **342** generates a verification response in the form of a message back to decision processor **344**. Plug in module **342** generates and transmits verification queries in the form of messages to a monitored device **314**. In response, monitored device **314** generates a verification response in the form of a message back to plug-in module **342**.

Decision engine **334** may be implemented in the C programming language for the Linux operating system, or with other languages and/or operating systems. Decision engine **334** primarily functions to accept messages, check for problem(s) identified in the message, and attempts to correct the problem. If the problem cannot be corrected the decision engine **334** opens a "case". In the illustrative embodiment, decision engine **334** may be implemented as a state-machine created within a database structure that accepts messages generated by events such as traps and changes state with messages. If the decision engine reaches certain states, it opens a case. The main process within the decision engine state-machine polls a message queue and performs the state transitions and associated tasks with the transitions. Events in the form of decision requests are processed by the decision engine/virtual state-machine. The decision module/virtual state-machine processes the request and initiates a verification query. The verification response to the verification query is processed by the decision module/virtual state-machine. Based on the configuration of the decision module/state-machine the decision module/state

machine initiates a case management module case request. Events are polls, traps, and threshold violations generated by the status poller, fault trapper, and performance poller respectively. As shown in FIG. **11**, decision engine **334** comprises several continuously running processes or modules including populate module **380**, command module **382**, decision module **384**, variable module **386**, on demand status poller module **388**, and timer module **390**, described in greater detail hereinafter. These processes may launch new processes when required. In the illustrative embodiment, these processes share database tables in database **352** as a means for communication by accessing and manipulating the values within the database. In FIGS. **4**–**6** and **10**, the functions of Decision Engine **334** are performed by command module **382**, decision module **384**, variable module **386**, on demand status poller module **388**, and timer module **390**, described in greater detail hereinafter. In FIG. **7**, the functions of Decision Processor **344** are performed by decision module **384**, variable module **386**, on demand status poller module **388**, and timer module **390**. The functions of Case Generator **346** is performed by command module **382**.

Populate Module

The populate module **380** creates and initializes the state machine(s) to the "ground" state for each managed object **314** whenever a user commits changes to their list of managed objects. In the illustrative embodiment, unless purposefully overridden, the populate module **380** will not overwrite the current machine state for a managed object. Otherwise, notifications could be missed. Also, the deletion of an object upon a commit results in the deletion of all state machines, timers, and variables associated with the object to prevent unused records and clutter in database **352**.

Command Module

The command module **382** retrieves records from the command table, performs the task defined in a database record, and, based on the result returned by the command, places a message in the message queue, i.e. the Message Table. In the illustrative embodiment, a command can be any executable program, script or utility that can be run using the system( ) library function.

In illustrative embodiment, the command module **382** may be implemented in the C programming language as a function of a Decision Engine object and perform the functions described in the pseudo code algorithm set forth below in which any characters following the "#" symbol on the same line are comments:

while TRUE # loop forever

retrieve the record that has been sitting in the commands_queue table for the longest period of time

use the system command (or some other as yet to be determined method) to execute the command found in the action field of the current record. The argument list for action will be build using the values found in the host, poll, instance, and argument fields of the current record. Upon completion of the command, if the message found in the message field is not blank, put the message into the message queue.

#end loop forever

Decision Module

The decision module **384** retrieves messages from the message queue, determines which state machine the message is intended for, changes the state of the machine based on the content of the message, and "farms out" to the other modules the tasks associated with the state change. In the illustrative embodiment, a task has associated therewith a number of optional components including a type, action, arguments, condition and output message. A brief description of each task component is shown below:

type—identifies which module, i.e., command, variable, timer, or on demand state poller, that is to perform the task. The action of some types of tasks may be handled by the decision module and not sent to another module. For example, a message with the type "say" is just a request to put a new message into the message queue. The decision module handles such task.

action—the specific action the module is to take. For example, increment a counter or start a timer.

arguments—any arguments required to complete the action

condition—if present, identifies a condition that must be met before the associated message can be put into the message queue. A condition may consist of a comparison between the value of a variable stored in the variables table and a constant value or the value of another variable that evaluates as either true or false. An example condition would be "count>5", which means that the value of the value field in the variables table record where the value of the varName field is 'count' for the current object should be greater than five for a message to be put into the queue. Condition expressions may be of the form: <VAR_NAME COMPARISON_OPERATOR VALUE>[[AND|OR] [VAR_NAME COMPARISON_OPERATOR VALUE]] . . . By adhering to this format, the code that parses the condition expression will not have to be changed if the condition expression changes. Also, such format allows for arbitrarily complex condition expressions.

output message—the message to be put into the message queue upon completion of the task. The output message can be blank indicating that there is no message to put into the message queue on completion of the task. Since messages are deleted as they are taken or "popped" from the message queue, the messages may be logged to the log table in database **352** to provide a permanent record of message traffic.

In order to provide additional flexibility to the arguments field of the active_timers, command_queue, and variable_queue tables, the arguments field in the transition_functions and state_functions tables may be allowed to contain patterns that can match any of the field names found in the messages table or the value of any varName field in the variables table. When a matching pattern is found it is replaced with the value from the messages table field that the pattern matches or, if the pattern matches a varName field in the variables table, the pattern is replaced with the appropriate value from the from the value field in the variables tables. The format for a replaceable pattern may be:

%[PATTERN]%

Where PATTERN is count, name, or saveInfo, for example. Pattern matching and replacement may be done within the decision module before a "task" record is created for one of the queues. The varName field in the variables table should not have a value that conflicts with the field names in the messages table. Since the message table is checked first, the use of a varName that matches a field in the messages table would result in the pattern being replaced with a value different from what the user expected. To prevent this from happening, any attempt to add a record to the variable table may have to have the value of the varName field checked against a list or reserved words.

In illustrative embodiment, the decision module **384** may be implemented in the C programming language as a function of a Decision Engine object and perform the functions

described in the pseudo code algorithm set forth below in which any characters following the "#" symbol on the same line are comments:

```
1   while True # run forever
    retrieve all messages from the messages table (with a LIMIT of
    100 messages)
2       for each message
        parse the message record into its component parts: message,
        object (host, poll, instance), and extra_info using the
        object value create an SQL query that will retrieve the current
        state record for all active machines of the object
3           for each machine of object
            use the message and the current state of the machine to
            create an SQL query that will retrieve the next state of
            the machine
4               if a next state is found
                update the current state record for the machine in the
                current_state table to the new state
                Using the current machine type, the current state
                (pre-transition) and the message, create an SQL
                query that will retrieve all tasks that are to be
                performed as a result of the machine receiving the
                current message from the transition_functions table
5                   for each task
                    determine the type of task (timer, counter, status
                    request, or command) and insert into the
                    appropriate module's queue a task record with
                    field values set to the values found in the current
                    transition_functions table record. If the arg field
                    from the transition_functions record contains a
                    recognized replaceable string with the pattern
                    %[PATTERN%], replace the string with the value
                    retrieved from the current messages table record
                    from the field that matches the replaceable string.
                    If the pattern does not match one of the field
                    names from the messages table, Check the
                    variables table for a record with a varName field
                    with a value that matches the pattern. If a record
                    is found, replace the pattern with the value of
                    the value field from the variables table record
                    with the matching varName
                    # end for each task
                    Using the current machine type and the post
                    transition state create an SQL query that will
                    retrieve all tasks that are to be performed as a
                    result of the machine "arriving" at the next state
                    from the state_functions table.
                    If the arg field from the state_functions record
                    contains a recognized replaceable string, replace
                    the string with the value retrieved from the
                    current record from the field that matches the
                    replaceable string.
6                       for each task
                        determine the type of task (timer, counter,
                        status request, or command) and insert
                        into the appropriate module's queue a
                        task record with field values set to the
                        values found in the current transition_
                        functions table record. If the arg field
                        from the transition_functions record
                        contains a recognized replaceable string
                        with the pattern %[PATTERN%], replace
                        the string with the value retrieved from
                        the current messages table record from the
                        field that matches the replaceable string.
                        If the pattern does not match one of the
                        field names from the messages table,
                        Check the variables table for a record with
                        a varName field with a value that matches
                        the pattern. If a record is found, replace
                        the pattern with the value of the value
                        field from the variables table record with
                        the matching varName
                        # end for each task
4               # end if
3           # end for each machine of object
2       # end for each message
1   # end of while forever loop
```

Variable Module

The Variable module **386** retrieves records from the variable_queue table, performs the task defined in the record, and, upon completion of the task, puts the associated message into the message queue. Currently defined tasks include incrementing a counter, decrementing a counter, setting a counter to a specific value, and saving a "note" for later use. All tasks performed by the variable module **386** consist of either setting a variable to a value or updating a variable with a new value. In the illustrative embodiment, task statements may be assignment statements of the form:

VAR_NAME=VALUE

Where VAR_NAME is the name of variable being set or updated and VALUE is the value that VAR_NAME is being set to. VALUE can be of any data type (integer, float, or string, e.g.). VALUE can be a single value, such as 6, or consist of an expression that can include the VAR_NAME, such as count+1. If present in the current variable record, a condition has to be met before the message is put into the message queue.

In illustrative embodiment, the variable module **386** may be implemented in the C programming language as a function of a Decision Engine object and perform the functions described in the pseudo code algorithm set forth below in which any characters following the "#" symbol on the same line are comments:

```
1   while TRUE # loop forever
        retrieve all records ordered by time in an ascending order from
        the variable queue with a LIMIT of 100 records
2           for each record
            if the the value of the action field is a non-empty string
                determine the name of the variable that is to be set
                or updated. The name of the variable will always be
                the lvalue of the assignment statement and be of the
                form %[VAR_NAME]% = [SOME_VALUE] where
                VAR_NAME is replaced with the actual variable
                name (count, e.g.). Using the VAR_NAME create an
                SQL query that will determine whether or not a record
                for this variable exists in the variables table
            if the variable is not in the variables table,
                INSERT a record into the variables table with the
                varName set to VAR_NAME and set value to
                SOME_VALUE
            if the variable is in the variables table,
                UPDATE the record with varName set to
                VAR_NAME and value set to SOME_VALUE
3               if there is a non-null value in the condition field
                of the current record
                    create an SQL query using the condition
                    value ("count > 5", e.g.) that will test
                    whether or expression defined in the
                    condition is true or false
                perform the query
4                       if the query returns "true" (i.e., the
                        condition has been met)
                            insert the message found in the
                            message field of the current record
                            into the message queue.
                        # end if
3               # end if
                else there is no condition. insert the message
                found in the message field of the current record
                into the message queue else there is no condition.
                insert the message found in the message field of
                the current record into the message queue
2       # end for each record
1   # end loop forever
```

On Demand Status Poller Module

The on demand status poller module **388** retrieves records from the status_request table with a user defined frequency,

e.g. every 10 seconds. The module improves efficiency by batching status requests which will all be "launched" at the same time. The retrieved status requests are "farmed out" to the appropriate poller module. The on demand status poller module **388** waits for the results of the status requests to be returned by the pollers. Based on the result, the appropriate message is inserted into the message queue.

In illustrative embodiment, the on demand status poller module **388** may be implemented in the C programming language as a function of the Decision Engine object and perform the functions described in the pseudo code algorithm set forth below, in which any characters following the "#" symbol on the same line are programmers comments:

retrieve all records from the statReq table

Based on the type of the poll request (ICMP, TCP, PLGN, etc) "farm out" the status requests to the appropriate bulk poller.

retrieve the results (up or down) returned by the bulk pollers

for each status poll result

insert the appropriate message into the message queue

end for loop

Timer Module

The timer module **390** retrieves records from the active_timers table, performs the tasks defined in the record, and, upon completion of the task, puts the associated message into the message queue. Currently defined tasks include expiring a timer and clearing a timer. If present in the current timer record, a condition has to be met before the message is put into the message queue. An example condition would be "UNIX_TIMESTAMP>exp_time", which checks to see if a timer has expired.

In illustrative embodiment, the timer module **390** may be implemented in the C programming language as a function of the Decision Engine object and perform the functions described in the pseudo code algorithm set forth below in which any characters following the "#" symbol on the same line are programmers comments:

```
1   while TRUE # loop forever
    retrieve all records with an action of either clearTimer,
    clearTimers, or resetTimer
2       for each record
        if the action is clearTimer
        if the current record has a non-blank argument, delete the
        oldest record with an action of setTimer and with a message
        that equals the value of the argument field for the current
        object/maching tuple. Otherwise, delete the oldest record
        with an action of setTimer for the current object/machine
        tuple without regard for the value of the message field
        else if the action is clearTimers delete all records with an
        action of setTimer for the current object/machine tuple
        else if the action is resetTimer reset the appropriate timer by
        updating the timer record that is to be reset with the following
        pseudoSQL statement: update timer__que set timer__id =
        current time, argument = current__argument where object =
        current object and message = current message.
        # end for each record
        delete all records with an action of either clearTimer or
        clearTimers
        retrieve all records where the action is setTimer and
        timer__id < current time with a LIMIT of 100 records
3           for each record
4               if there is a non-null value in the condition field
                of the current record
                create an SQL query using the condition value
                perform the query
```

-continued

```
5               if the query returns "true" (i.e., the
                condition has been met) insert the
                message found in the message field of
                the current record into the message
                queue.
5               # end if the condition is met
4           # end if there is a condition
            else there is no condition. insert the message
            found in the message field of the current record
            into the message queue.
3       # end for each record
        delete all of the records just retrieved. Delete the
        records based on the unique timer__id to ensure that
        the correct records are deleted.
1   # end loop forever
```

One or more of the above described processes or modules, including populate module **380**, command module **382**, decision module **384**, variable module **386**, on demand status poller module **388**, and timer module **390**, operate in conjunction to collectively perform the functions the elements of decision engine **334** and other elements of appliance **300** as noted herein.

Finite and Virtual State Machines

FIGS. **12**A–C are provided as visual aid to help the reader understand the nature of state machines. A two-state state machine can be represented by the diagram illustrated in FIG. **12**A. The diagram FIG. **12**A can be interpreted as follows:

If you are at StateA and if you get a message "message", then do what is specified in "transition" and after that we are at StateB.

Such For design purposes, the same state machine can be represented as illustrated in FIG. **12**B. A more complex machine may be illustrated in the diagram of FIG. **12**C.

The state machine illustrated in the diagram of FIG. **12**C may be represented as a virtual state machine in database **352** as shown in Table 1 below:

TABLE 1

"sm__Table"

state__name	Function	Message	Target__state	Active
A	FuncA( )	Msg__1	B	1
B	FuncB( )	Msg__2	A	0

In the illustrative embodiment, messages are the mechanism to make a state machine change state, in addition to control messages to initialize state machines or to forcefully change state. Messages arrive from a message queue. At any time only the active states can accept messages. The last column in Table 1 determines the active state for the state machine. Only one state is active (active=1) and all other states are inactive (active=0). If no active state can accept the message, the message is discarded. Initially, the state machine is at ground state, meaning the ground state is the only active state. After handling of the message, the machine returns to the ground state again.

Messages are kept in a database table and handled in a first come first served basis. Each message has an associated timestamp with it, which helps to determine which message arrived earlier. Since that timestamp is unique it is also used as the message id, as shown in Table 2 below:

TABLE 2

"messages"	
msg_id	msg
971456805855844	TCP_down
971456805878973	SNMP_down

A state machine will frequently request waiting before changing states. Instead of launching new processes for each wait request, a single timer process operating on a set of timers may do the same job with much less resource. A special timers table is employed for that purpose. Since a unique id for each timer is needed, a timestamp may also be used for that purpose, as shown in Table 3 below:

TABLE 3

"timers"		
Timer_id	expiration	msg
971456805855844	971456865855844	Wait1min_over
971456805858344	971457105855844	Wait5min_over

The timer process operates on the timers table by checking for the expiration of timers and if the current time is past expiration, deletes the entry from table and inserts the message into the message queue.

Frequently the functions to be executed at state transitions are status requests. Instead of launching those requests everytime they are requested, the requests may be kept in a status_request table, as shown in Table 4 below. The status handler process handles the execution of those status requests using Table 4.

TABLE 4

"status_request"		
Req_id	StatusReqst_name	msg
971456805858344	Check_TCP	TCP_OK
971457105855844	Check_AC	AC_OK

Given a fundamental understanding of state machines and how their respective states can be changed using message input, the finite state machine models on which all the virtual state machines used within the appliance **300** are is described hereafter. Records contained within database **352** define several finite state machine models managed by decision engine **334**.

Finite State Machines

Decision Engine **334** is designed to minimize resource utilization, allow for the launching of multiple Finite State Machines, and conduct multiple activities simultaneously. Decision Engine **334** can be used to perform any decision making process which can be modeled by a Finite State Machine. A finite state machine model in accordance with the illustrative embodiment may be defined by the following:

A finite set of states. Each state represents a condition or step in the decision process. Only one state in each machine may be active at a time, and this is referred to as the 'Current State'

A finite set of inputs. (events that trigger state changes and the execution of actions) Inputs are represented as messages pertaining to objects, providing the events that trigger state changes and the execution of actions. Any message that does not have a Current State with a transition waiting (listening) for it will be considered invalid and discarded. This provides the validation process for the Decision Engine **334**. An infinite number of possible messages are filtered to allow only a finite number of messages through when they are valid.

Finite set of transitions. Given a particular state and a particular message, transfer is facilitated to the next state. At the point in time when the transition occurs, it can initiate any tasks defined for the transition and target state. Each transition is uniquely defined by the 'Current State, Message and Destination State'.

Set of transition tasks that define zero or more actions that are to be performed based on the current state and input received (e.g., anytime current state is 'StateA' and the input 'MessageA', perform the transition tasks for 'StateA, MessageA.' For example, actions may include launching the On-Demand Status Poller Module to recheck the status of an object, setting a timer, and opening a case that identifies an object as being critical.

Set of state tasks that define zero or more actions that are to be performed based on the next state independent of the input or current state (e.g., anytime the target state is 'StateA' perform the state tasks for 'StateA').

To keep the number of records in database **352** manageable no matter how large the number objects managed by apparatus **300**, each type of finite state machine is defined only once. For each managed object **314** a virtual state machine comprising the name of the object, the type of state machine and the current state of the state machine is added to and maintained by database **352**. As events are received, the decision engine **334** uses database **352** to "look up" the next state and the actions to be performed in the tables and records that define the state machines. FIGS. **16**–**20** illustrate several finite state machine models supported by the illustrative embodiment of the apparatus **300** including the finite set of states within each finite state machine model and the input data necessary to change states. A description of each finite state machine model is described below.

noWaitVerify State Machine

FIG. **16** illustrates the noWaitVerify finite state machine model **1600** supported by the illustrative embodiment of appliance **300**. The purpose of the noWaitVerify state machine **1600** is to verify the status of an object (as up or down) by requesting that the appropriate poller module recheck the status of the object. If the result of the recheck matches the last status of the object, the object's status is verified and a case is opened or updated as appropriate. The functionality of the noWaitVerify state machine is described in pseudo code forth below:

Accept critical "status events" from the dependency module.

Send a poll request to the on-demand status poller.

If the "status" is verified to be critical, update a case with "warning".

If the "status" remains critical for 10 minutes, update a case with "critical".

If the "status" remains critical for 1 hour, update case.

If the "status" returns to normal, verify status and update a case with "normal".

Table 5 below identifies the next state transitions and associated actions for the noWaitVerify state machine:

State Name	Input	Next State	Actions
Ground	Critical	verifyCritical	Start 10 min. Timer Start 1 hr. Timer Re-poll status of object
verifyCritical	Critical	critical	Start 500 sec. Timer Open new case
verifyCritical	Normal	Ground	No actions
critical	Critical600	critical	Update case with 10 min. warning
critical	Critical3600	critical	Update case with 1 hour warning
critical	Normal	verifyNormal	Re-poll status of object
critical	Retest	critical	Start 500 sec. Timer Re-poll status of object
verifyNormal	Critical	critical	Clear current 500 sec. Timer Start a new 500 sec. timer
verifyNormal	Normal	Ground	Update case with "returned to normal" message

icmpVerify State Machine

FIG. **17** illustrates the icmpVerify finite state machine model **1700** supported by the illustrative embodiment of the apparatus **300**. The purpose of the icmpVerify state machine is to verify the status of an object (as up or down) by requesting that the appropriate poller recheck the status of the object. If the result of the recheck matches the last status of the object, the object's status is verified and a case is opened or updated as appropriate. What differentiates the nowaitverify state machine from the icmpverify state machine is that the icmpverify state machine waits 40 seconds before requesting that an object's status be rechecked. The functionality of the icmpverify state machine is described in pseudo code forth below:

Accept critical "status events" from the dependency module.

Wait at least 40 seconds in case spanning tree is causing the problem.

Send a poll request to the on-demand status poller.

If the "status" is verified to be critical, open or update a case with "warning".

If the "status" remains critical for 10 minutes, update a case with "critical".

If the "status" remains critical for 1 hour, update case.

If the "status" returns to normal, verify status and update a case with "normal".

slidingWindow State Machine

FIG. **18** illustrates the slidingWindow finite state machine model **1800** supported by the illustrative embodiment of the apparatus **300**. The purpose of the slidingWindow state machine is to suppress case updates and the associated notifications caused by objects that are "flapping". That is, objects that have a status that is repeatedly changing back and forth from up and down. The functionality of the slidingWindow state machine is described in pseudo code forth below:

Accept "extra_info" from other state machines and update cases.

If the rate of AutoCase updates exceeds 5 in a sliding 30 minute window, suppress any more, update case saying "AutoCase updates Suppressed!"

If any new AutoCases come in during the suppressed state, hold onto the latest info.

When the rate drops below 4 per 30 minutes, update case with the last "info" and say "AutoCase updates Resumed!".

upsOnline State Machine

FIG. **19** illustrates the upsOnline finite state machine model **1900** supported by the illustrative embodiment of the apparatus **300**. The purpose of the upsOnline state machine is to monitor the status of an uninterruptible power supply (UPS). The upsOnline State machine works in concert with the upsBattery state machine. The functionality of the upsOnline state machine is described in pseudo code forth below:

Accept critical "status events" from the dependency module.

Wait for up to 5 minutes to see if power will return or update case.

When power returns wait 10 minutes to make sure it is stable.

If the "status" remains critical for 10 minutes, update a case with "critical".

If the "status" remains critical for 1 hour, update case.

upsBattery State Machine

FIG. **20** illustrates the upsBattery finite state machine model **2000** supported by the illustrative embodiment of the apparatus **300**. The purpose of the upsBattery state machine is to monitor the battery charge level of a UPS. The upsBattery state machine works in concert with the upsOnline state machine. The functionality of the upsBattery state machine is described in pseudo code forth below:

Uses object. "name:PLGN:upsBattery"

Same as noWaitVerifyStateMachine, accepts, when OnBattery (from UPS OnLine State Machine), ignore any problems with the battery.

However, when the power is restored, let the UPS OnLine State Machine know when the battery is OK (charged).

Note: Destatus(n) represents 'comand (updateDEstatus.pl n), " ", " " where (n) is the status index.

In addition to the upsBattery and upsOnline state machines, the remaining state machines aren't device specific. Accordingly, regardless if the device is a router, a switch, a personal computer, etc., the icmpVerify, icmpVerify, and slidingWindow state machines can be used. The inventive network appliance **300** reduces false positives through use of the state machines. When a device is first reported down, appliance **300** doesn't alert the end user that the device is down without confirmed verification. This process is done by waiting a certain amount of time and repolling the device. If the second poll shows that the device is still down, appliance **300** sends out an alert. This process of verifying statuses before reporting alarms is facilitated by the Decision Engine **334** and the state machines associated with the monitored device.

Decision Engine **334** uses the specially designed finite state machines to verify that monitored objects identified as critical by the Status Poller Module and Dependency Checker are in fact down. Decision Engine **334** then performs such functions as: Initiating detailed information in support of new case generation for the down object, or status updates to existing cases at specific time intervals for impacted objects, including device- or condition-specific messages that are provided by the state machine; updating existing cases when objects become available; and suppress-

ing case updates for monitored objects that have exceeded a defined number of updates within a prescribed period of time.

As will be obvious to those reasonably skilled in the arts. Other state machine models may be accommodated by appliance **300** and used similarly without significant reconfiguring of the device beyond recompiling of the appropriate code segments. Extensibility is accomplished by allowing new and enhanced finite state machine models to be quickly developed and introduced without the need to change system code. For example, if a new Finite State Machine is needed because a new type of status poll has been created to better monitor or manage a specific object, the definition of this new State Machine does not require a change to the appliance **300** application software. Once the new State Machine is added to the system, any managed object that is of the new status poll type will be handled by the Decision Engine without requiring recompilation of any part of the underlying Decision Engine code. In addition, the functionality of the Decision Engine can be extended by its ability to run any program, script or utility that exists on the appliance **300** application. This function can be applied to instances such as when a process managed by appliance **300** is identified as "down", the Finite State Machine for that object can be designed to run a command that will attempt to restart the process without human intervention.

The virtual state machines provide a significant scaling advantage as compared to traditional state machines. Implementation of virtual state machines within a database solves several constraints including constraints associated with memory resident state machines implemented in RAM. With the memory constraint removed, the number of virtual state machines maintained concurrently may be increased by orders of magnitude. In addition, implementation of virtual machines in memory rather that as executing processes, allows the state data of monitored objects to be retained through a loss of power by the network appliance.

Decision Process

In terms of decision process, the Decision Engine **334** receives potential issues and supporting details following Root Cause Analysis. The defined Finite State Machine(s) for the identified objects are invoked to supplement the discovery and validation process. Based on its instructions, the Decision Engine **334** then seeks to validate the status of the device as well as other surrounding devices through the On-Demand Status Poller Module **335**. The On-Demand Status Poller **335** returns status details to the Decision Engine **334** where the results are evaluated further. Once a network issue has been isolated and validated, the source of the problem and other supporting detail is passed to the Case Management system **336**, which is the primary component of appliance **300**'s Service Management capability. Additionally, the status details relating to the root cause and devices affected through dependency are provided to the Status View Maintenance Module **385**, which depicts the status in the Network Status Table and Status Maps **387**. The various appliance **300** modules continue this course of action and provide updates to both cases and status indications as status conditions change.

The Status Poller polls managed objects and awaits a response within system defined parameters. Should a response not be received, the event is forwarded to the decision engine for further analysis. Concurrently, the Trap Receiver system fault trapper will collect and forward trap information to the decision engine for further analysis. The output of the decision engine is a validated problem requiring action or acknowledgement by a human operator. The decision engine uniquely identifies the problem for documentation. At a minimum the uniqueness of the problem is established by identifying the managed object effected and providing a date and time stamped description of the validated problem. The validated problem may be enhanced by further identifying the decision engine as the initiator of the problem, identifying the status of the problem, and assigning a priority to the problem. Any combination of fields within the database may be used to develop a list of problems and the order in which the problems should be addressed. For example, the database may be configured to sort and list problems by priority and date/time stamp. Thus the human technician may view a list of problems with priority one problems, sorted by age, at the top of the list. The human operator typically will document all actions taken. Actions taken will be date/time stamp and chronologically listed within the problem description along with all machine-generated information. Thus the documentation/notification engine will have recorded machine generated validated problems along with human actions within a self contained, chronological description of the problem and all actions through resolution.

The inventive appliance suppresses the generation of additional problems or cases by appending to existing problems previously identified. For example, the inventive decision engine can be configured to search for an unresolved problem previously opened by the decision engine for a specific managed object. By appending information to the existing problem the intended viewer of the problem text, i.e. the human technician, can view all machine and human generated information within its chronological context. This method significantly reduces event storms that typically inundate network management systems. Specifically, objects that continuously flap from a "known good state" to a "fault" state typically generate events associated with the transition from "known good state" to "fault" state. The inventive appliance will suppress such event storms by logically grouping all such events within one unresolved problem associated with the root cause object.

Database Tables and Field Definitions

A central relational database **352** is employed to facilitate data persistence and interprocess communication. Several processes or modules may access the same tables in the database, so the database provides a mechanism for interprocess communication. Database **352** may be implemented with any number of commercial SQL database server products, including mySQL commercially available from mySQL AB. The database server can handle a large number, e.g. 50 million records, in a single database table. In the illustrative embodiment, database **352** may include the following tables: poll, messages, current_state, state_machine, active_timers, variable_queue, command_queue, variables, transition_functions, state_functions, status_request. These tables are defined in greater detail hereinafter:

Messages Table

The message table serves as the queue for all messages used by the decision engine. All modules can place a message in the queue, but only the decision module reads messages from the queue. A message can refer to a specific object and the state machine for that object or, through the use of wildcards, multiple objects and state machines. The fields within the message table, the data type of the field and default value thereof are listed below:

msg__id	bigint(20) unsigned	DEFAULT '0' NOT NULL,
message	char(255)	DEFAULT ' ' NOT NULL,
name	char(50)	DEFAULT ' ' NOT NULL,
method	char(20)	DEFAULT ' ' NOT NULL,
instance	char(20)	DEFAULT ' ' NOT NULL,
extra__info	char(255)	DEFAULT ' ' NOT NULL,
PRIMARY KEY	(msg__id)	

current_state Table

The current_state table maintains the current state of each active state machine within the database. The fields within the current_state table, the data type of the field and default value thereof are listed below:

machine	char(20)	DEFAULT ' ' NOT NULL,
state__name	char(20)	DEFAULT ' ' NOT NULL,
name	char(30)	DEFAULT ' ' NOT NULL,
method	char(20)	DEFAULT ' ' NOT NULL,
instance	char(20)	DEFAULT ' ' NOT NULL,
KEY state__name		

state_machine Table

The state_machine table contains state transition information for every type machine in the system. There is one record for each possible state transition for each machine type. The fields within the current_state table, the data type of the field and default value thereof are listed below:

machine	char(20)	DEFAULT ' ' NOT NULL,
state__name	char(20)	DEFAULT ' ' NOT NULL,
message	char(255)	DEFAULT ' ' NOT NULL,
target	char(20)	DEFAULT ' ' NOT NULL,
PRIMARY KEY (machine,state__name,message)		

machine_definition Table

The machine_definition table defines the type of machine that is to be created for a managed object based on the "method" and "instance" of the object. The fields within the machine_definition table, the data type of the field and default value thereof are listed below:

machine	char(20)	DEFAULT ' ' NOT NULL,
method	char(20)	DEFAULT ' ' NOT NULL,
instance	char(20)	DEFAULT ' ' NOT NULL,
KEY (method)		

active_timers Table

The active_timers table serves as a queue for all requests for some kind of action on the part of the timer module. A request can refer to a specific object or, through the use of wildcards, multiple objects. Upon completion of the action and the meeting of an optional condition, a message will be placed into the message queue. The fields within the active_timers table, the data type of the field and default value thereof are listed below:

timer__id	bigint(20) unsigned	DEFAULT '0' NOT NULL,
name	char(30)	DEFAULT ' ' NOT NULL,
method	char(10)	DEFAULT ' ' NOT NULL,

-continued

instance	char(20)	DEFAULT ' ' NOT NULL,
machine	char(20)	DEFAULT ' ' NOT NULL,
arguments	char(50)	

variable_queue Table

The variable_queue table serves as the queue for all requests for some kind of action on the part of the variable module. A request can refer to a specific object or, through the use of wildcards, multiple objects. Upon completion of the action and the meeting of an optional condition, a message will be placed into the message queue. The fields within the variable_queue table, the data type of the field and default value thereof are listed below:

variable__id	bigint(20) unsigned	DEFAULT '0' NOT NULL,
name	char(30)	DEFAULT ' ' NOT NULL,
method	char(10)	DEFAULT ' ' NOT NULL,
instance	char(20)	DEFAULT ' ' NOT NULL,
machine	char(20)	DEFAULT ' ' NOT NULL,
message	char(255)	

command_queue Table

The command_queue serves as the queue for all requests for some kind of action on the part of the command module. A request can refer to specific object. or, through the use of wildcards, multiple objects. Upon completion of the action and the meeting of an optional condition, a message will be placed in the message queue. The fields within the command_queue table, the data type of the field and default value thereof are listed below:

command__id big	int(20) unsigned	DEFAULT '0' NOT NULL,
name	char(30)	DEFAULT ' ' NOT NULL,
method	char(10)	DEFAULT ' ' NOT NULL,
instance	char(20)	DEFAULT ' ' NOT NULL,
machine	char(20)	DEFAULT ' ' NOT NULL,

variables Table

The variables table contains the values of variables associated with a particular object that must be saved, modified, or retrieved in conjunction with a task. Examples of variables to be saved include 1) a count of the number of case updates for each managed object. It is the job of the variables module to increment, decrement or reset counters as it works off counter requests in the variable_queue.2) the text of the last suppressed auto_open request. The fields within the variables table, the data type of the field and default value thereof are listed below:

name	char(30)	DEFAULT ' ' NOT NULL,
method	char(10)	DEFAULT ' ' NOT NULL,
instance	char(20)	DEFAULT ' ' NOT NULL,
machine	char(20)	DEFAULT ' ' NOT NULL,
varName	char(10)	DEFAULT ' ' NOT NULL,

transition_functions Table

The transition_functions table contains the list of actions that are to be performed as the result of a particular machine receiving input I (a message) while in state S. For every machine type there is a record for every possible machine

state/input combination. The fields within the transition_functions table, the data type of the field and default value thereof are listed below:

machine	char(20)	DEFAULTs ' ' NOT NULL,
state_name	char(20)	DEFAULT ' ' NOT NULL,
input_message	char(255)	DEFAULT ' ' NOT NULL,
type	char(20)	DEFAULT ' ' NOT NULL,
action	char(20)	DEFAULT ' ' NOT NULL,
condition	char(20)	DEFAULT ' ' NOT NULL,
arguments	char(50)	DEFAULT ' ' NOT NULL,
output_message	char(255)	DEFAULT ' ' NOT NULL,
PRIMARY KEY(machine,state_name,input_message,type,action)		

state_functions Table

The state_functions table contains the list of actions that are to be performed as the result of a particular machine "arriving" at state regardless of the input. For every machine type there will be zero or more records for each state. The fields within the state_functions table, the data type of the field and default value thereof are listed below:

machine	char(20)	DEFAULT ' ' NOT NULL,
state_name	char(20)	DEFAULT ' ' NOT NULL,
type	char(20)	DEFAULT ' ' NOT NULL,
action	char(20)	DEFAULT ' ' NOT NULL,
condition	char(20)	DEFAULT ' ' NOT NULL,
arguments	char(50)	DEFAULT ' ' NOT NULL,
output_message	char(50)	DEFAULT ' ' NOT NULL,
PRIMARY KEY (machine,state_name,input_message,type,action)		

status_request Table

The status_request table serves as the queue for all requests for status polls to be performed by the on demand status poller module. The fields within the status_request function table, the data type of the field and default value thereof are listed below:

request_id	bigint(20) unsigned	DEFAULT '0' NOT NULL,
name	char(30)	DEFAULT ' ' NOT NULL,
method	char(10)	DEFAULT ' ' NOT NULL,
instance	char(20)	DEFAULT ' ' NOT NULL,
message	char(255)	DEFAULT ' ' NOT NULL,
PRIMARY KEY (request id).		

The illustrative embodiment of the invention has been described with an implementation using a database **352**. It will be obvious to those skilled in the art the that the actual configuration of data storage components may be left to the system designer. For example, although a single database is shown, more than one database may be used, or data may be stored among a plurality of databases in distributed manner. In addition, the data described herein may be stored in traditional memory using look-up tables which contain data similar to that disclosed herein while still achieving the same results.

Wildcards in Messages

Wildcard usage is limited to the name, method and instance fields of the messages, active_timers, counter_queu, and command_queue tables. In the illustrative embodiment an asterisk (*) is used as the wildcard character, however, it will be obvious to those skilled in the arts that any number of characters may be used as acceptable wildcard characters. The use of an asterisk in place of a specific value in a name, method, or instance field means that this message refers to all objects that match the values in the non-wildcarded fields. For example, a message with the following values:

714536493, 'moveToState(G round)', '*', 'TCP', '*'

means that the message is intended for all currently active state machines that exist for objects with the poll type of "TCP". The use of an asterisk in each of the name, method, and instance fields of a message means that the message is intended for all active machines.

User Interface

The appliance **300** includes a web server process **381** which generates a user interface which includes a number of menu selectable options and can dynamically generate a visual representation of the current state of managed objects and the Boolean relationships between objects at different layers of the Open Systems Interconnect network protocol model. In the illustrative embodiment, web server process **381** may be implemented a commercially available products such as the Apache Web server product. The dynamically generated visual representation of a managed object can scaled down to display the desired number of upstream and down stream objects from the target object, as illustrated in FIGS. **13**–**15** and **22**. Data regarding a monitored object(s) can be viewed in the format of a Status Map or a Status View, as described hereafter.

The diagrams illustrated in FIGS. **13**–**15** are generated dynamically upon request from the user. Status Table and Status Map Module **387** within appliance **300** accesses the records within database **352** to determine the upstream and downstream devices for a selected node and their relationships thereto. The Module **387** queries the portion of database **352** which maintains the virtual state machines for the selected node and its respective parent and child nodes. The diagram is then generated from this information to accurately reflect the current configuration and status of all managed objects in the conceptual diagram.

Alternatively, a map of the entire network may be generated and stored statically in database **352** or other memory and updated periodically. In this embodiment, only the selected node and its data string of managed objects (i.e., devices on which it is dependent) will be cross referenced with the virtual state machines prior to display.

Status Map

As shown in FIG. **15**, a web-based user interface is presented including navigation bar **1510**, Status Map **1505** and a macroview graphic **1500** of the computer network being monitored. FIG. **22** illustrates a Status Map **2205** and a macroview graphic **2200**, having substantially similar format to those shown in FIG. **15**. A Selecting on the Map link under the Status menu on the navigation bar **1510** opens the Status Map **1505**. Status Map **1505** provides a zoomed or microview physical map of the selected section of graphic **1500**, designated with a box in graphic **1500**. Status map **1505** shown managed objects shown in a navigable map format. Map **1505** provides a quick and easy visual guide to ascertain the network's health. A Dependency Summary, show in text form, may be provided near the top of the map indicating the number of objects in each possible status. The map view may be customized by selecting one or any combination of three options, including Pan/Full, Group/Dependency, and Single Status/All Status.

When the Status Map is opened, the top and left most section of the map is shown. This map view is referred to as the Pan mode. Navigation to other sections of the map may be performed using the single and double navigation arrows

icons shown on the map. The single arrow will move the map one object to the left or right, or up and down. The double arrows will move the map one full screen either to the left or right, or up and down.

The entire Status Map **1505** may be displayed in the browser window, by selecting the View and Re-draw option commands causing the re-draw the status map to show the entire network. The horizontal and vertical scroll bars can be used to navigate to other parts of the map. To return to the Pan mode, selecting the View and Re-draw commands will cause the map to return to its default status.

By default, the Status Map opens in Dependency view, similar to Status Map **2205** shown in FIG. **22**, showing physical connections between objects based on parent child relationships. When viewing the parent child dependency relationships between managed objects, the parent objects are situated to the left of child objects.

The Status Map for Groups can be viewed by checking the View check box and selecting the Re-draw button to re-draw the Status Map showing objects according to their Group affiliation. In Group mode, the context of parent-child is reversed. Since a Group cannot in itself be tested, the status of the Group (parent) is derived from its members (children). Parent Groups are to the left, and child members are to the right. The Group map depicts the relationship of various network objects in relation to how they are associated and configured in correlation to the Group. This permits monitoring by groups of like devices, location or site, or specific end-to-end processes. To return to the Dependency mode, selecting the View and Re-draw commands will cause the map to return to its default status.

Single Status/All Status

The Status Map (by default) shows you the Single Status view for all objects shown. Selecting the View and Re-draw commands will display a full complement of All Status icons (raw, dependency, decision engine and case), as shown in Status Map **2205** shown in FIG. **22**. To show only the single dependency status, selecting the View and Re-draw commands again will display dependency status.

Each object in the status map may be visually depicted using icons specifically designed to provide easy recognition and visibility. Within the maps, the object's name may be listed directly underneath the icon. Next to the icon, the appropriate status may be listed in text or iconically (single status by default, all status when selected). Selecting on an object icon will return the Tools View for the respective item.

Relationship Indicators

The lines that connect one object to another indicate the relationship of an object to other objects in the network. In the illustrative embodiment, the parent objects are shown to the left and above; children objects are shown to the right and below. If groups are present in the map, appliance **300** provides information depicting the Boolean dependency expressions that have been formulated to determine what objects/nodes have an effect on determining the Group's operational status. Boolean dependency expression symbols, indicate that a Group has been created and this object is contributing to the overall determination of the Group's health and operational status. Appliance **300** allows the user to define during set-up the various individual conditions that constitute the status of a created Group.

A circle with an ampersand inside, similar to symbol **1512** of FIG. **15**, indicates an 'AND' Boolean function test that is taking into consideration the operational status of individual nodes (i.e., Node A & Node B & Node C). If any of the nodes included in the expression is down, then the group status will show "down." A circle with a line through, similar to symbol **1514** of FIG. **15**, means there is an 'OR' Boolean function test or expression. In such case, with multiple nodes being included in the expression (i.e., Node A or Node B or Node C), if all of the items are down, then the status for the group will show "down." An "f" in a circle symbol is used to indicate complex expressions involving a combination of 'AND' and 'OR' Functions between the members (i.e., '[(NodeA|NodeB) & (NodeC|Node D)]' means the Group is normal if one of Node A 'OR' Node B 'AND' one of Node C 'OR' Node D is normal). No symbol bubble indicates that the Group contains only one member. There is no need to interpret these details as Appliance **300** automatically takes this logic into account when establishing a Group's status. Placing a pointing device such as a mouse pointer over any of these symbols on the network Status Maps will show you the specific details of the Boolean expression.

Network Health and Navigation Graphic

As shown in FIG. **15**, in the upper-right portion of the Pan Map screen, Appliance **300** provides a small-scale version of the Status Map reflecting the entire network, referred to as a macroview or "whole" view of the network and labeled as graphic **1500**. The square indicates the current location of the detail that is being shown in the main or "microview" Status Map. Selecting an area of the graphic map **1500** causes the Status Map **1505** to navigate to that portion of the network re-draw the main map at the location selected. In the contemplated embodiment, the map may be color coded to indicate which nodes or portions of the map have status other than normal, to facilitate selection thereof. Upon selecting a portion of the full network map, the user is presented with a node level diagram **1505**, as illustrated in the remaining portion of FIG. **15**. As shown, a selected node, as well as all other managed objects in its operational chain are illustrated conceptually, along with their status. As shown, the status of each managed object is indicated with a sphere, the color of which may indicate the status of the managed device.

Tools View

By selecting on the Tool icon or the node icons in the Status Map, the Tools View screen opens, revealing a 3-Gen map. FIGS. **13** and **14** illustrate "3-Gen" or three generation maps which display the parent and child devices to a selected object are presented and labeled accordingly. In addition, the status of the state machine for the selected node is illustrated. As with the presentation of FIG. **15**, the status of each device presented in FIGS. **13** and **14** is illustrated with a sphere of changeable color. In the illustrative embodiment, green may be used to indicate a node object which is functioning properly, red may be used to indicate a node object which is non responsive or failing, other colors may be used to indicate node objects which are only partially functioning or offline, etc. It will be obvious to those skilled in the arts that other techniques may be used to represent the status of a managed object.

FIGS. **13** and **14** illustrate a Tools view of a map **1300** and **1400**, respectively, that can navigated through by selecting the arrows next to the objects that are related to the object in question. The options above the map allow access to additional information about the object including case information, status information, performance information, and the ability to review any associated logs for the object. Under the Cases section, selecting the Active link will open

the Case Browse screen showing all of the active cases for that object. A complete history of cases for the object, can be obtained by selecting the All link, which will open the Case Browse screen and show every case (both active and closed) for the object in question. Selecting the Table link or the Map link under the Status section opens the respective status screen, revealing the position of the object in the network. If Table is selected, the Group heading that includes the object in question opens at the top of the screen. If Map is selected, a section of the network Status Map is opened with the object in question approximately centered on the screen.

If performance graphing is provided for the object, it is directly accessible from the Tools View by selecting the Statistics link under the Performance section (only displayed if applicable) to open the MRTG graphs applicable to the object. If performance graphing is not applicable, 'n/a' (not available) will be listed under the Performance heading. Selecting the View Log link (under the Log section) will open the View Log screen. If the object open in the Tools View has associated log entries (typically process availability) for the current day, they are displayed here.

Performance polling data may be graphically depicted in various views representing each monitored performance element over different durations of time. Graphical displays are based on the ubiquitous Multi-Router Traffic Grapher (MRTG). Long duration views such as one (1) year are ideal tools for presentation of long term trending. Smaller duration views (in months, days, or hours) are useful to more precisely detect or evaluate specific anomalies or performance events that have occurred.

Performance thresholds can also be established for each performance element being monitored. Should performance levels surpass the pre-established performance baseline, appliance **300** can systematically identify and log this condition, and proceed to alert network management personnel through the integrated Case Management engine **336** and Notification engine **356**.

Selecting the Table link under the Status menu on the navigation bar **2110** opens the Status Table **2100**, as illustrated in FIG. **21**. The Status Table lists managed objects in tabular format. A Dependency Summary may be provided above the table, indicating the number of objects in each possible status. Below that, each object is listed with its current status indicated next to it. Data presented includes: Available Tools, Object Name, Status Indicator Symbols and Description.

Appliance **300** provides the option of viewing performance in either a Single Status mode that reflects object operational status, or an All Status mode that shows a more detailed view of status and processes. When this mode is selected, there are four single status indicators used within the a Status Table and Status Maps. The status icons visually depict the operational status or severity of a network problem as shown in Table 6 below:

Status Icon	Status	Description
Circle (Green)	Normal	Object is operational and functioning properly.
Circle (Yellow)	Warning	Indicates a potential problem; an object may be down. It is currently in the process of being pulled to determine its real status.
Circle (Red)	Critical	Object has been confirmed as down; a critical failure.

-continued

Status Icon	Status	Description
Circle (Blue)	Dependency Failed	Object may or may not be down; no way to determine due to a parent object or link failure.

A dependency failure indicates that an object between the target object and Appliance **300** is not operating normally, and the status of the object in question is unknown due to its inaccessibility. By selecting the status icon for a non-dependency down object that responds to ICMP, a trace route is run between Appliance **300** and the respective object.

The architectural components of appliance **300** application detect a network's status, determine the root cause of a problem, verify operational status, and track cases pertaining to the devices, systems, services and applications. These integrated components work together to assist network management personnel identify real problems and focus their energy on efforts to manage the network.

The All Status mode provides a user with a more comprehensive view of network performance. A unique icon reflects specific information about an aspect of the appliance **300** with the color presented, thereby allowing the user to view object status as a complete process should they need additional background on the events leading to the status shown or case generation.

Table 7 below is a description of the status indicators used when All Status is reflected in the Status Map or Status Table. This information can assist in the troubleshooting and diagnostics process.

Raw Status

Such Icon Status pertains to the operation of the respective object as viewed on the Status Map or Status Table.

Status Icon	Status	Description
Diamond (Green)	Normal Status The object is working within normal parameters.	Testable objects have passed the last test. Group objects are not directly testable, however their raw status status is evaluated by the Boolean expression of the raw status of the members in the group. Simple relationships can indicate that "any" or "all" of the members are "normal." Complex relationships follow the simple Boolean rules. Typically, no action is required. However, there may be tools available for these objects that can help find clues about critical objects. Compare raw status color to dependency and decision engine color.
Diamond (Red)	Critical Status The object is not working within normal parameters.	Testable objects have failed the last test. Look for the root cause to start the troubleshooting process. Group objects are not directly testable, however their raw status status is evaluated by the Boolean expression of the raw status of the members in the group. Simple relationships can indicate that "any" or "all" of the members are "critical." Complex relationships follow the simple Boolean rules.

Dependency Status

Status of objects that may have been impacted through dependency relationship.

Status Icon	Status	Description
Circle (Green)	Normal Status The object is working within normal parameters.	Typically, no action is required.
Circle (Red)	Root Cause The object is a root cause. Group objects: the root cause of the problem is within its members.	Testable objects have failed, and there are no failed parents. Wait for the decision engine to verify the status and open a case before starting the troubleshooting process. For group objects: Look for the root cause within its members.
(Blue)	Dependency Failed Parent has failed. Group objects: the root cause is not one of the members.	Wait for the decision engine to verify the status and open a case before starting the troubleshooting process.

Decision Engine Status

Status of current operation of the Decision Module as it relates to analyzing the specific object.

Status Icon	Status	Description
Triangle (Green)	Ground State There are no active State Machines for this object.	No action is required unless it is determined that a Finite State Machine should be running.
Triangle (Red)	Verified Critical State Machine is active. It is verifying or has verified the status.	Watch for the case priority icon to see if the event has led to a case being generated.

Case Priority

Status indicates the presence of active cases for the object, including the priority as currently assigned to the case. If active cases are present, the user can click on the case icon and they will be routed to the Search Results screen where the case can be accessed.

Status Icon	Status	Description
Square (Green)	No Active Cases There are no active cases for this object.	No action is required unless other status icons indicate that there should have been a case generated.
Square (Blue)	Informational Case Active Manual or AutoCase has been set to Info priority.	Read the case and take action as applicable.
Square (Yellow)	Low Priority Case Active Manual or AutoCase has been set to low priority.	Read the case. If applicable, verify that object is normal and close the case.
Square (Orange)	Medium Priority Case Active Manual or AutoCase has been set to medium priority.	Read the case. If applicable, work on this if there are no high priority cases to work on.

-continued

Status Icon	Status	Description
Square (Red)	High Priority Case Active Manual or AutoCase has been set to high priority.	Read the case. If applicable, the case should be worked on ASAP to troubleshoot and correct the issue.

Placing a pointing device cursor over a status icon in a Status Map or Status Table generates a hint box that provides a description of the status as set forth in Table 8 below. The values may be any of the following:

Diamond (Green)	Raw Status: normal
Diamond (Red)	Raw Status: critical
Circle (Green)	Dependency: normal
Circle (Red)	Dependency: root cause
Circle (Blue)	Dependency: dependency failed
Triangle (Green)	Decision Engine: normal
Triangle (Red)	Decision Engine: critical
Square (Green)	Case Management: no active cases
Square (Blue)	Case Management: info case active
Square (Yellow)	Case Management: low priority case active
Square (Orange)	Case Management: medium priority case active
Square (Red)	

Referring again to FIG. **22**, an All Status view **2200** of a monitored object **2210** includes multiple status icons **2202**, **2204**, **2206**, and **2208**, in accordance with the description herein. The other managed objects within the view **2200** have similar status icons.

Groups

Appliance **300** allows a collection of monitored objects to be depicted as a Group. The Group is represented as an object, and it is dependent upon its member objects to determine the Group's status. The Group is then displayed as a standard object icon on all relevant maps. Additionally, Group objects are represented on group status maps and tables that depict the relationship of member objects to the Group.

Selecting a Group object from the Group Status Maps or Status Table will cause the display of an abbreviated map, which contains the Tools View for the Group object. Group members may be defined in the same manner as other object dependency strings. However, when a Group's status becomes dependency failure, an inference can be made as to the source of the problem.

Consider the example in which a site has three Uninterrupted Power Sources (UPSs) being monitored. The power supply may be modeled as a Group by creating a Group object, and adding 'OR' dependencies to all three of the UPSs. In this way, when all three UPSs fail at the same time,

the status of the Group object will go show dependency failure, signifying a strong possibility that the entire site has lost power.

The All Status states of a Group object are:

Raw Status (Diamond Icon)

Bad/Red—Member object's raw status caused Group's dependency expression to show "Failed" (depend down).

Good/Green—Member object's raw status translates to good based on expressions established (Group's dependency expression shows "Up").

Dependency Status (Circle Icon)

Bad/Red—This Group's member objects are considered the "root cause" of the failure(s) occurring.

Bad/Blue—This Group is dependency down, and the root cause for failure(s) is not among the Group's members.

Good/Green—Member object's status is good.

Decision Engine Status (Triangle Icon)

Red—This Group is being processed by the Decision Engine (is not in "Ground State").

Green—This Group is in "Ground State" in the Decision Engine.

Case Status (Square Icon)

Red—High priority AutoCase exists for this Group.

Orange—Medium priority AutoCase exists for this Group.

Yellow—Low priority AutoCase exists for this Group.

Blue—Information Case exists for this Group.

The user interface described above is a web based user interface. It will be obvious to those skilled in the arts that other user interface formats, such as one compatible with the many version of the Windows operating system may be equivalently used with the present invention with the same results.

From the foregoing description and attached figures, the reader will appreciate that the present invention provides a device which is capable of monitoring the status of complex networks of devices or processes, providing information regarding the status of the network or a specific device through a plurality of different communication channels and displaying accurate visual representations of a node and its immediate relationships in the network, in a manner which is both intuitive and efficient.

Although various exemplary embodiments of the invention have been disclosed, it will be apparent to those skilled in the art that various changes and modifications can be made which will achieve some of the advantages of the invention without departing from the spirit and scope of the invention. It will be obvious to those reasonably skilled in the art that other components performing the same functions may be suitably substituted. Further, the methods of the invention may be achieved in either all software implementations, using the appropriate processor instructions, or in hybrid implementations which utilize a combination of hardware logic and software logic to achieve the same results. Such modifications to the inventive concept are intended to be covered by the disclosure herein and any claims deriving priority from the same.

What is claimed is:

1. In a computer system having a processor, memory and a network interface, an apparatus for monitoring a plurality of device or process objects operatively coupled to the computer system over a computer network, the apparatus comprising:

(a) means for monitoring the status of the plurality of monitored objects over the computer network;

(b) a memory for storing a plurality of different finite state machine models, each finite state machine model comprising:

(i) a finite set of states, only one of the states being active at a time and referred to as the current state,

(ii) a finite set of input events that trigger state changes and execution of actions,

(iii) a finite set of transitions, each of which, given a current state and a specific input event, cause a transition of the finite state machine model to a next state, and

(iv) a set of actions associated with selected of the finite states;

(c) the memory for further storing a virtual state machine associated with each of the plurality of monitored objects, each virtual state machine comprising:

(i) data identifying the monitored object,

(ii) data identifying one of the plurality of finite state machine models, and

(iii) data identifying one of the finite states of the identified finite state machine model as a current state of the virtual state machine; and

(d) a decision engine, coupled to the means for monitoring and the memory, for receiving input event data relating to one of the monitored objects and for accessing the virtual state machine in memory associated with said one monitored object, the decision engine further configured to manipulate the data identifying the current state of the virtual state machine associated with said one monitored object and for determining which actions associated with the identified finite state machine model should be performed.

2. The apparatus of claim **1** wherein the set of actions associated with selected of the plurality of different finite state machine module comprises:

(b)(iv)(1) actions to be performed based on a current state of the finite state machine model and a received input data.

3. The apparatus of claim **1** wherein the set of actions associated with selected of the plurality of different finite state machine models comprises:

(b)(iv)(1) actions to be performed based on a next state of the virtual state machine model, without regard to a current state of the finite state machine model and any received input data.

4. In an apparatus operatively coupled over a computer network to a plurality of device or process objects, a method comprising:

(a) storing in a memory a plurality of different finite state machine models, each finite state machine model comprising:

(i) a finite set of states, only one of the states being active at a time and referred to as the current state,

(ii) a finite set of input events that trigger state changes and execution of actions, and

(iii) a finite set of transitions, each of which, given a current state and a specific input event, cause a transition of the finite state machine model to a next state,

(iv) a set of actions associated with one of the states;

(b) further storing in the memory a virtual state machine associated with each of the plurality of monitored objects, each virtual state machine comprising:

(i) data identifying the monitored object,

(ii) data identifying one of the plurality of finite state machine models, and

(iii) data identifying one of the finite states of the identified finite state machine model as a current state of the virtual state machine;

(c) monitoring the status of the plurality of monitored objects over the computer network;

(d) receiving input event data relating to one of the monitored objects;

(e) accessing the virtual state machine in memory associated with said one monitored object;

(f) manipulating the data identifying a current state of the virtual state machine associated with said one monitored object; and

(g) executing the actions associated with the identified finite state machine model.

5. The method of claim **4** wherein (g) comprises:

(g1) sending a status query to a monitored objects based on the current state of a monitored object.

6. The method of claim **4** wherein (g) comprises:

(g1) alerting an external device to the current state of a monitored object.

7. The method of claim **4** wherein (g) comprises:

(g1) providing an external device with access to the data in memory relating to the current state of a monitored object.

8. The method of claim **4** wherein (g) comprises:

(g1) initializing a case relating to a monitored object having a specific current state.

9. In a data processing system for monitoring a plurality of device or process objects operatively coupled to the data processing system over a computer network, an apparatus comprising:

a memory for storing a data structure usable to maintain a virtual finite state machine associated with one of the monitored objects, the data structure comprising:

(a) data identifying said one monitored object;

(b) data identifying one of a plurality of different finite state machine models, each finite state machine model comprising:

(i) a finite set of states, only one of the states being active at a time and referred to as a current state,

(ii) a finite set of input events that trigger state changes and execution of actions,

(iii) a finite set of transitions, each of which, given a current state and a specific input event, cause a transition of the finite state machine model to a next state, and

(iv) a set of actions associated with selected of the finite states;

(c) data identifying one of the finite states of the identified finite state machine model as a current state of the virtual state machine; and

a decision engine, coupled to the memory, for receiving input event data relating to one of the monitored objects and for accessing the virtual state machine in memory associated with said one monitored object, the decision engine for manipulating the data identifying the current state of the virtual state machine associated with said one monitored object and for determining which actions associated with the identified finite state machine model should be performed.

10. The apparatus of claim **9** wherein the set of actions associated with one of the states of a finite state machine model comprises:

(b)(iv)(1) actions to be performed based on a current state of the finite state machine model and a received input data.

11. The apparatus of claim **9** wherein the set of actions associated with one of the states of a finite state machine model comprises:

(b)(iv)(1) actions to be performed based on a next state of the virtual state machine, without regard to the current state of the virtual state machine and any received input event data.

12. The computer program product for use with an computer system operatively coupled over a computer network to a plurality of device or process objects, the computer program product comprising a computer useable medium having embodied therein program code comprising:

(a) program code for storing in a memory a plurality of different finite state machine models, each finite state machine model comprising:

(i) a finite set of states, only one of the states being active at a time and referred to as the current state,

(ii) a finite set of input events that trigger state changes and execution of actions,

(iii) a finite set of transitions, each of which, given a current state and a specific input event, cause a transition of the finite state machine model to a next state, and

(iv) a set of actions associated with selected of the finite states;

(b) program code for further storing in the memory a virtual state machine associated with each of the plurality of monitored objects, each virtual state machine comprising:

(i) data identifying the monitored object,

(ii) data identifying one of the plurality of finite state machine models, and

(iii) data identifying one of the finite states of the identified finite state machine model as a current state of the virtual state machine;

(c) program code for monitoring the status of the plurality of monitored objects over the computer network;

(d) program code for receiving input event data relating to one of the monitored objects;

(e) program code for accessing the virtual state machine in memory associated with said one monitored object;

(f) program code for manipulating the data identifying a current state of the virtual state machine associated with said one monitored object; and

(g) program code for executing the actions associated with the identified finite state machine model.

13. The computer program product of claim **12** wherein (g) comprises:

(g1) program code for sending a status query to a monitored objects based on the current state of a monitored object.

14. The computer program product of claim **12** wherein (g) comprises:

(g1) program code for alerting an external device to the current state of a monitored object.

15. The computer program product of claim **12** wherein (g) comprises:

(g1) program code for providing an external device with access to the data in memory relating to the current state of a monitored object.

16. The computer program product of claim **12** wherein (g) comprises:

(g1) program code for initializing a case relating to a monitored object having a specific current state.

* * * * *