Trials@uspto.gov
571-272-7822

Paper 34
Date: August 7, 2024

UNITED STATES PATENT AND TRADEMARK OFFICE

BEFORE THE PATENT TRIAL AND APPEAL BOARD

GLOBAL SHADE CORPORATION,
Petitioner,

v.

WITH-U E-COMMERCE (SHANGHAI) CO., LTD.,
Patent Owner.

IPR2023-00580
Patent 10,669,738 B2

Before PATRICK R. SCANLON, BARRY L. GROSSMAN, and GEORGE R. HOSKINS, *Administrative Patent Judges.*

SCANLON, *Administrative Patent Judge*.

JUDGMENT
Final Written Decision
Determining All Challenged Claims Unpatentable
Denying Patent Owner's Revised Motion to Amend
35 U.S.C. § 318(a)

I. INTRODUCTION

Global Shade Corporation ("Petitioner") challenges claims 1, 2, 4, 13, and 14 of U.S. Patent No. 10,669,738 B2 (Ex. 1001, "the '738 patent"), which is assigned to With-U E-Commerce (Shanghai) Co., Ltd. ("Patent Owner"). We have jurisdiction under 35 U.S.C. § 6, and this Final Written Decision is issued pursuant to 35 U.S.C. § 318(a) and 37 C.F.R. § 42.73. For the reasons that follow, we determine that Petitioner has shown by a preponderance of the evidence that claims 1, 2, 4, 13, and 14 of the '738 patent are unpatentable. With regard to Patent Owner's Revised Motion to Amend, we determine that Petitioner has demonstrated, by a preponderance of the evidence, that proposed substitute claims 15–19 are unpatentable as obvious under 35 U.S.C. § 103. Accordingly, we deny Patent Owner's Revised Motion to Amend.

A. Procedural History

Petitioner filed a Petition (Paper 2, "Pet.") requesting an *inter partes* review of the challenged claims. Patent Owner filed a Preliminary Response (Paper 6).

We instituted a trial as to all challenged claims. Paper 9 ("Decision on Institution" or "Dec. Inst.").

After institution, Patent Owner filed a Patent Owner Response (Paper 15, "PO Resp."), Petitioner filed a Reply (Paper 18, "Reply"), and Patent Owner filed a Sur-reply (Paper 21, "Sur-reply").

In addition, Patent Owner filed a Contingent Motion to Amend (Paper 16), and Petitioner filed an Opposition to Patent Owner's Motion to Amend (Paper 19). We provided Preliminary Guidance (Paper 20). Patent Owner subsequently filed a Revised Motion to Amend (Paper 22, "RMTA"), and Petitioner filed an Opposition to Patent Owner's Revised Motion to

Amend (Paper 24, "RMTA Opp."). Patent Owner filed a Reply to Petitioner's Opposition (Paper 28, "RMTA Reply"), and Petitioner filed a Sur-reply to Patent Owner's Revised Motion to Amend (Paper 30, "RMTA Sur-reply").

Petitioner relies on testimony from Jeffrey L. Stein, Ph.D. (Exs. 1002, 1102, 1202) to support its challenges. Patent Owner relies on testimony from Wendy Reffeor, Ph.D. (Exs. 2007, 2021) to support its contentions.

An oral hearing was held on June 13, 2024. A transcript of the hearing is included in the record. Paper 33 ("Tr.").

B. Real Parties in Interest

Petitioner identifies itself as the real party in interest. Pet. 103. Patent Owner identifies itself as the real party in interest. Paper 4 ("Patent Owner's Mandatory Notices"), 2.

C. Related Matters

The parties identify the following proceeding as a related matter involving the '738 patent: *With-U E-Commerce (Shanghai) Co., Ltd. v. Global Shade Corp.*, Case No. 8:22-cv-01295-JVS-JDE (C.D. Cal.). Pet. 103; Paper 4, 2.

Patent Owner also identifies the following items as related matters:

IPR2021-00365 (challenging U.S. Patent No. 10,273,710; final written decision issued July 25, 2022);

U.S. Pat. App. Ser. No. 16/012,076 (filed June 19, 2018) (now U.S. Pat. No. 10,597,897);

U.S. Pat. App. Ser. No. 16/188,273 (filed November 12, 2018) (now U.S. Pat. No. 11,299,906);

U.S. Des. Pat. App. Ser. No. 29/725,316 (filed February 24, 2020) (now U.S. Pat. No. D926,910);

U.S. Des. Pat. App. Ser. No. 29/725,318 (filed February 24, 2020) (now U.S. Pat. No. D925,687); and

U.S. Pat. App. Ser. No. 17/716,126 (filed April 8, 2022).

Paper 4, 2.

D. The '738 Patent

The '738 patent, titled "Collapsible Canopy Frame Having a Central Lock," issued on June 2, 2020, with claims 1–14, and claims continuation-in-part priority to a U.S. national stage entry from PCT Application CN 2016/091675, filed on July 26, 2016 and now U.S. Patent No. 10,273,710. Ex. 1001, codes (45), (54), (63), 1:6–10, 10:7–12:47.

The '738 patent describes a collapsible canopy frame with at least three supporting legs and a central lock that locks the frame in an unfolded state and permits the frame to be folded when unlocked. *Id.* at 1:51–57. The canopy frame includes outer retractable units connected between adjacent supporting legs and inner retractable units connected between the supporting legs and the central lock. *Id.* at 1:57–60.

Figure 16 of the '738 patent is reproduced below.

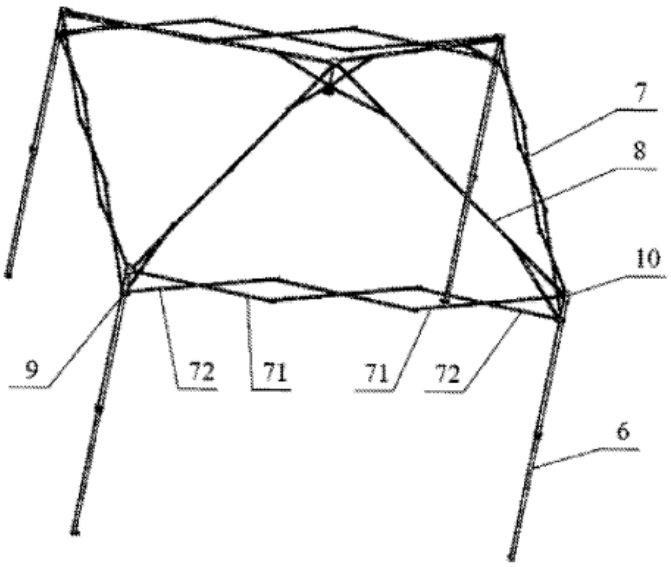

FIG. 16

Figure 16 depicts an example of a canopy in an unfolded state. *Id.* at 2:20–21. As shown in Figure 16, a canopy mounted with a central lock comprises four supporting legs 6, outer retractable units 7 connected between every two adjacent supporting legs 6, and inner retractable units 8 connected to each supporting leg 6. *Id.* at 3:67–4:4. Outer retractable units 7 and inner retractable units 8 form a roof frame of the canopy, and the roof frame and supporting legs 6 form a canopy frame. *Id.* at 4:4–8.

In addition, inner ends of inner retractable units 8 are connected through a central lock. *Id.* at 4:8–9. Figure 2 of the ’738 patent is reproduced below.

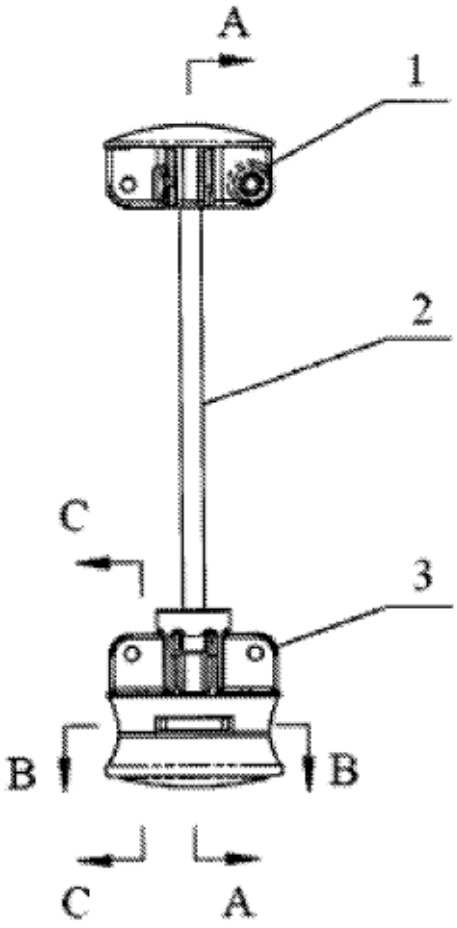

FIG. 2

Figure 2 depicts an example of a canopy's central lock in a locked state. *Id.* at 2:1–2. As shown in Figure 2, the central lock includes center pole 2, whose top end is fixedly connected to center top cap 1, and whose bottom end is detachably connected to center bottom cap 3. *Id.* at 3:33–36. Figure 6 of the '738 patent is reproduced below.

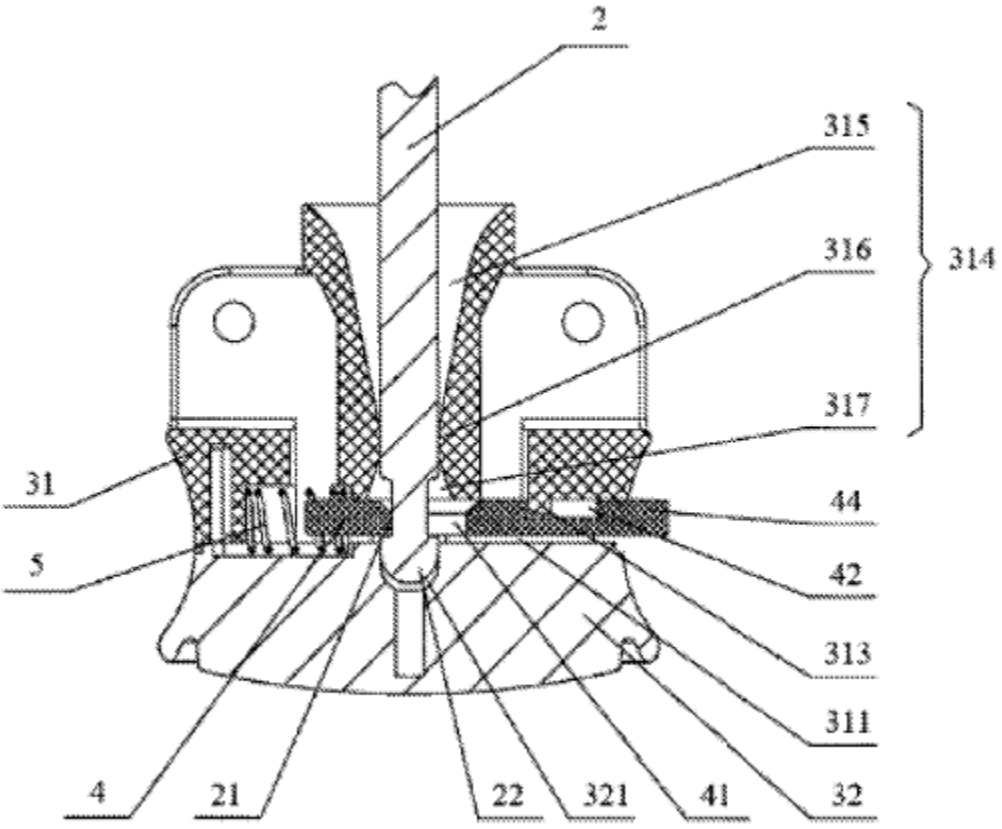

FIG. 6

Figure 6 depicts the bottom portion of the central lock shown in Figure 2 in greater detail. *Id.* at 2:6–7. As shown in Figure 6, center bottom cap 3 receives locking piece 4, which can move back and forth radially with respect to center pole 2. *Id.* at 3:40–43. Locking piece 4 includes first through hole 41, through which center pole 2 may pass. *Id.* at 3:43–44. The end part of center pole 2 includes clamping groove 21 and clamp locking part 22 at the lower end of clamping groove 21. *Id.* at 3:45–47. When the

central lock is in a locked state, part of an inner wall of first through hole 41 of locking piece 4 is clamped with clamping groove 21 of center pole 2, and an upper end surface of clamp locking part 22 abuts a lower end surface of locking piece 4, such that clamp locking part 22 cannot thread first through hole 41 and center pole 2 and center bottom cap 3 are in a mutually connected state. *Id.* at 3:47–55. Spring 5 abuts locking piece 4 to force it into groove 21. *Id.* at 6:49–7:10. When the central lock is in an unlocked state, locking piece 4 moves radially with respect to center pole 2 such that the inner wall of first through hole 41 of locking piece 4 is separated from clamping groove 21, clamp locking part 22 can thread first through hole 41, and center pole 2 can be separated from center bottom cap 3. *Id.* at 3:55–63, Fig. 11.

Figure 19 of the ’738 patent is reproduced below.

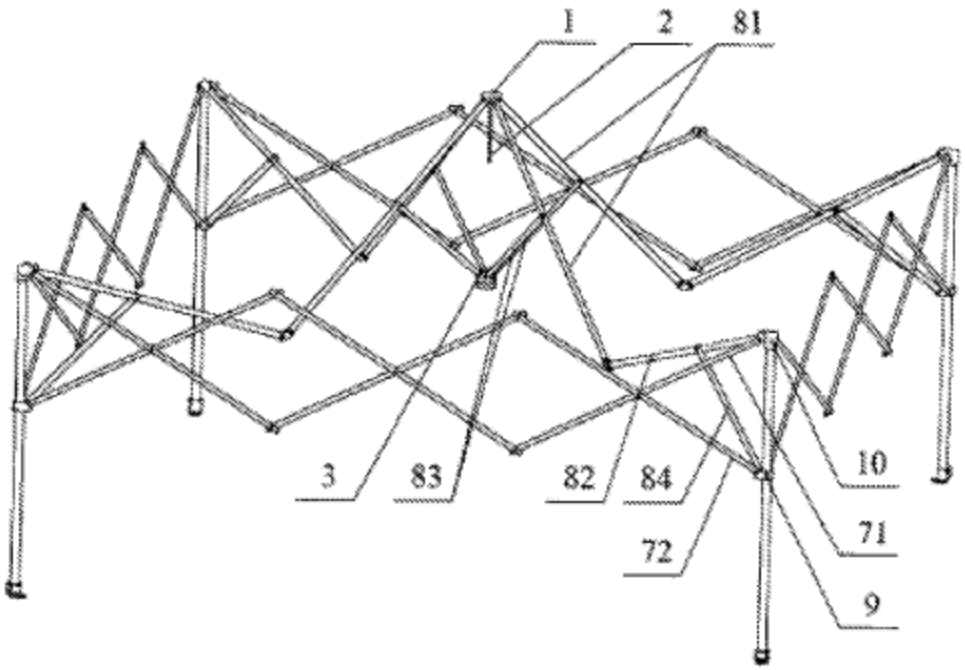

FIG. 19

Figure 19 depicts an example of a canopy being folded or unfolded. *Id.* at 2:27–28. When the canopy is unfolding from a folded state, four

supporting legs 6 are centered about the central lock and unfolded outwards, with outer retractable units 7 and inner retractable units 8 gradually stretching outwards. *Id.* at 4:20–24. After the canopy is unfolded, center bottom cap 3 is pushed upwards towards center pole 2, such that center pole 2 is inserted into center bottom cap 3 and clamping groove 21 is clamped with part of the inner wall of first through hole 41. *Id.* at 4:24–30. After center bottom cap 3 has been connected with center pole 2, the unfolded state of the canopy is fixed and the entire canopy is locked. *Id.* at 4:37–39. The canopy may be folded by separating locking piece 4 from clamping groove 21 and pulling center bottom cap 3 downwards from center pole 2 to enable inner retractable units 8 to be folded towards the central lock and inner retractable units 7 to be folded inward. *Id.* at 4:49–5:5.

E. Challenged Claims

Petitioner challenges claims 1, 2, 4, 13, and 14, of which claim 1 is independent. Claim 1 is reproduced below.

> 1. A collapsible canopy frame, comprising:
>
> A. at least three supporting legs,
>
> B. a plurality of outer retractable units, each outer retractable unit connected between two adjacent supporting legs, each said outer retractable unit comprises a plurality of hinged X-shaped rod members, each X-shaped rod member comprises a first eave pipe and second eave pipe hinged to one another,
>
> C. a plurality of inner retractable units comprising inner ends, each inner retractable unit connected to a supporting leg, wherein said outer retractable units and said inner retractable units form a roof of said collapsible canopy frame, and
>
> D. a central lock, comprising:
>
> 1. a center top cap,
>
> 2. a center bottom cap,

> 3. a center pole positioned between said center top cap and said center bottom cap, wherein said central lock is locked when said center pole is connected to both said center top cap and said center bottom cap, and wherein said center lock is unlocked when there is a disconnection between said center bottom cap and said center pole, wherein said central lock locks said collapsible canopy frame in an unfolded state when said central lock is locked and permits said collapsible canopy frame to be folded into a folded state when said central lock is unlocked, wherein said inner ends of said inner retractable units are connected through said central lock.

Ex. 1001, 10:7–35.

F. Instituted Grounds of Unpatentability

We instituted *inter partes* review of the challenged claims based on the following grounds of unpatentability asserted by Petitioner:[1]

Claim(s) Challenged	35 U.S.C. §	References/Basis
1, 2, 4, 14	103	Rousselle,[2] Tsai[3]
4, 13, 14	103	Rousselle, Tsai, Ohnishi[4]

Dec. Inst. 37; Pet. 8.

II. ANALYSIS

A. Legal Standards

To prevail in its challenge, Petitioner must demonstrate by a preponderance of the evidence that the claims are unpatentable. 35 U.S.C. § 316(e) (2018); 37 C.F.R. § 42.1(d) (2022). "In an IPR, the petitioner has

---

[1] The Leahy-Smith America Invents Act, Pub. L. No. 112-29, 125 Stat. 284 (2011) ("AIA"), amended 35 U.S.C. § 103. Because at least one claim of the '738 patent has an effective filing date after March 16, 2013, we apply the AIA version of 35 U.S.C. § 103. *See* AIA § 3(n)(1).
[2] US 6,345,639 B2, issued Feb. 12, 2002 (Ex. 1003).
[3] UK 2 321 913 A, published Aug. 12, 1998 (Ex. 1005).
[4] US 8,066,300 B2, issued Nov. 29, 2011 (Ex. 1006).

the burden from the onset to show with particularity why the patent it challenges is unpatentable." *Harmonic Inc. v. Avid Tech., Inc.*, 815 F.3d 1356, 1363 (Fed. Cir. 2016) (citing 35 U.S.C. § 312(a)(3) (2012) (requiring *inter partes* review petitions to identify "with particularity . . . the evidence that supports the grounds for the challenge to each claim")). This burden of persuasion never shifts to the patent owner. *See Dynamic Drinkware, LLC v. Nat'l Graphics, Inc.*, 800 F.3d 1375, 1378 (Fed. Cir. 2015) (discussing the burden of proof in *inter partes* review).

A patent claim is unpatentable under 35 U.S.C. § 103 "if the differences between the claimed invention and the prior art are such that the claimed invention as a whole would have been obvious before the effective filing date of the claimed invention to a person having ordinary skill in the art to which the claimed invention pertains." 35 U.S.C. § 103; *see KSR Int'l Co. v. Teleflex Inc.*, 550 U.S. 398, 406 (2007). The question of obviousness is resolved on the basis of underlying factual determinations including: (1) the scope and content of the prior art; (2) any differences between the claimed subject matter and the prior art; (3) the level of ordinary skill in the art; and (4) when in evidence, objective indicia of non-obviousness (also called secondary considerations), such as commercial success, long-felt but unsolved needs, and failure of others. *Graham v. John Deere Co.*, 383 U.S. 1, 17–18 (1966). We analyze grounds based on obviousness in accordance with the above-stated principles.[5]

[5] The record does not include any evidence of objective indicia of non-obviousness.

B. Level of Ordinary Skill in the Art

In determining whether an invention would have been obvious before its effective filing date, 35 U.S.C. § 103 requires us to resolve the level of ordinary skill in the pertinent art. *Graham*, 383 U.S. at 17. The person of ordinary skill in the art is a hypothetical person who is presumed to know the relevant art. *In re GPAC, Inc.*, 57 F.3d 1573, 1579 (Fed. Cir. 1995). Factors that may be considered in determining the level of ordinary skill in the art include, but are not limited to, the types of problems encountered in the art, the sophistication of the technology, and educational level of active workers in the field. *Id.* In a given case, one or more factors may predominate. *Id.*

Relying on the testimony of Dr. Stein, Petitioner alleges a person having ordinary skill in the art "would have had at least a bachelor's degree in the mechanical arts, or a related discipline, and at least two years of experience in the design and/or analysis of mechanical devices, fabricated frames, and/or kinematic linkages," and asserts that "[a]dditional work experience could serve as a substitute for a formal degree and vice versa." Pet. 7 (citing Ex. 1002 ¶¶ 25–28).

Patent Owner contends that a person having ordinary skill in the art "would have had a Bachelor's degree in mechanical engineering and two years of relevant experience." PO Resp. 10. Patent Owner adds that "[a] recipient of other academic degrees may qualify as a person of ordinary skill if they have taken coursework or have experience in a pertinent technology," and "[a]dditional education could offset less work experience; additional work experience could offset less education or coursework." *Id.*

Although not identical, the parties' definitions are substantially similar. Accordingly, for purposes of this Decision, we determine that no

express finding is necessary, and that the level of ordinary skill in the art is reflected by the prior art of record. *See Okajima v. Bourdeau*, 261 F.3d 1350, 1355 (Fed. Cir. 2001). We note, however, that our obviousness analysis in this Decision would not differ if we adopted either Petitioner's or Patent Owner's definition.

C. Claim Construction

In *inter partes* reviews, the Board interprets claim language using the district-court-type standard, as described in *Phillips v. AWH Corp.*, 415 F.3d 1303 (Fed. Cir. 2005) (en banc). *See* 37 C.F.R. § 42.100(b). Under that standard, we generally give claim terms their ordinary and customary meaning, which "is the meaning that the term would have to a person of ordinary skill in the art in question at the time of the invention, i.e., as of the effective filing date of the patent application" and "after reading the entire patent." *See Phillips*, 415 F.3d at 1313, 1321. Although extrinsic evidence, when available, may also be useful when construing claim terms under this standard, extrinsic evidence should be considered in the context of the intrinsic evidence. *See id.* at 1317–19.

Petitioner asserts construction is unnecessary and does not propose any term for construction. Pet. 7 (citing *Nidec Motor Corp. v. Zhongshan Broad Ocean Motor Co. Ltd.*, 868 F.3d 1013, 1017 (Fed. Cir. 2017)). Patent Owner does not propose any specific claim construction for any term of the challenged claims. PO Resp. 14.

On the full record, we do not discern a need to construe explicitly any claim language because doing so would have no effect on our analyses below of Petitioner's asserted grounds and will not assist in resolving the present controversy between the parties. *See Realtime Data, LLC v. Iancu*, 912 F.3d 1368, 1375 (Fed. Cir. 2019) ("The Board is required to construe

'only those terms that . . . are in controversy, and only to the extent necessary to resolve the controversy.'") (quoting *Vivid Techs., Inc. v. Am. Sci. & Eng'g, Inc.*, 200 F.3d 795, 803 (Fed. Cir. 1999)).

D. Asserted Obviousness Based on Rousselle and Tsai

Petitioner asserts that claims 1, 2, 4, and 14 are unpatentable under 35 U.S.C. § 103 based on Rousselle and Tsai. Pet. 9–73. Patent Owner provides arguments addressing this asserted ground of unpatentability. PO Resp. 14–56; Sur-reply 1–25. We first summarize the references and then address the parties' contentions.

1. Rousselle

Rousselle, titled "Collapsible Shelter/Tent with Frame Locking Mechanism," "relates to collapsible shelters and tents having sheet material walls supported by a collapsible frame." Ex. 1003, code (54), 1:14–18.

Figure 1(A) of Rousselle is reproduced below.

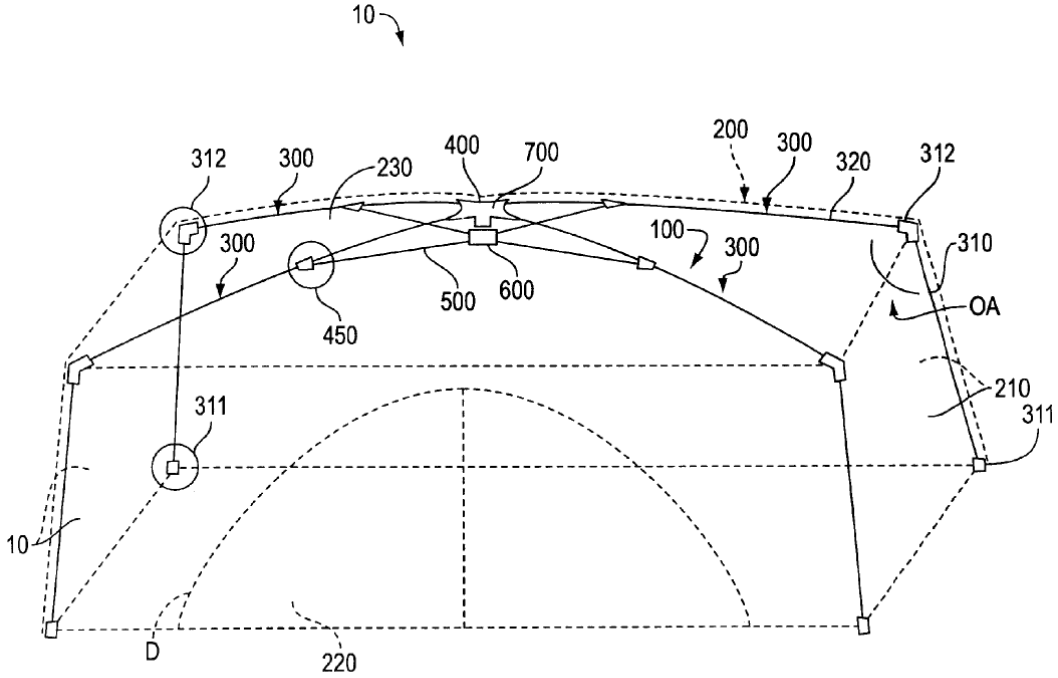

FIG. 1(A)

Figure 1(A) of Rousselle depicts an example of a collapsible shelter/tent in an erected state. *Id.* at 6:29–30. As shown in Figure 1A, shelter/tent 10 includes collapsible frame 100 that supports sheet-material cover 200. *Id.* at 6:30–32. Sheet-material cover 200 includes sides 210 and ceiling 230, and collapsible frame 100 has four supporting legs 300 pivotally attached to upper clevis 400. *Id.* at 6:44–46, 6:54–56. Rousselle describes that "[a]lthough four legs are preferred, the frame can have only three legs or can have five or more legs." *Id.* at 6:56–58. Each leg 300 includes leg tube 310 extending from tent foot 311 to hinge 312 and band bar 320 extending from hinge 312 to upper clevis 400. *Id.* at 6:58–61. Each leg 300 also includes hinge 450 that pivotally supports an outer end of center tube 500, while an inner end of center tube 500 is pivotally connected to lower clevis 600. *Id.* at 6:61–64. Upper and lower devices 400 and 600 may be locked together via locking mechanism 700. *Id.* at 6:66–67.

Figure 1(D) of Rousselle is reproduced below.

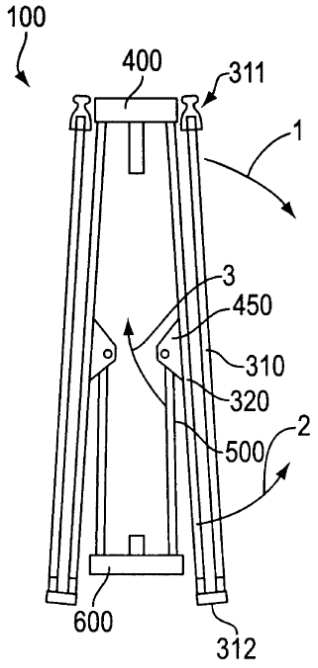

FIG. 1(D)

Figure 1(D) of Rousselle depicts an example of a shelter/tent in a collapsed state. *Id.* at 4:1–3. In order to erect a shelter/tent from such a collapsed state, a user may begin by moving leg tubes 310 downward in the direction of arrow 1 and raising band bars 320 upward in the direction of arrow 2. *Id.* at 13:5–9. Rousselle describes that this action causes center tubes 500 to elevate in the direction of arrow 3, and as center tubes 500 approach a horizontal position, their outer ends push against cover 200, causing legs 300 to flex. *Id.* at 13:9–15. After center tubes 500 are lifted past approximately the horizontal axis, lower clevis 600 is forced upward towards the upper clevis 400. *Id.* at 13:26–29. The outward force of center tubes 500 also creates pressure further forcing leg tube 310 in the direction of arrow 1 and hinge 312 to its fully opened state, as shown in Figure 1(A). *Id.* at 13:16–21.

Rousselle also describes that once lower clevis 600 has been moved upward a certain distance, the user can place one hand under lower clevis 600 and the other above upper clevis 400 and push the clevises together such that locking mechanism 700 can lock the clevises together. *Id.* at 13:22–26.

2. Tsai

Tsai, titled "Shelter frame with scissors-type linkage," "relates . . . to shelters including collapsible frames." Ex. 1005, code (54), 1:4–6. More specifically, Tsai describes "a shelter frame with a canopy support including . . . support rods" that "provides a greater support area than many prior canopy supports, which results in an aesthetically pleasing shelter canopy that is less likely to sag." *Id.* at 4:13–22; *see also id.* at 3:17–19.

Figure 1 of Tsai is reproduced below.

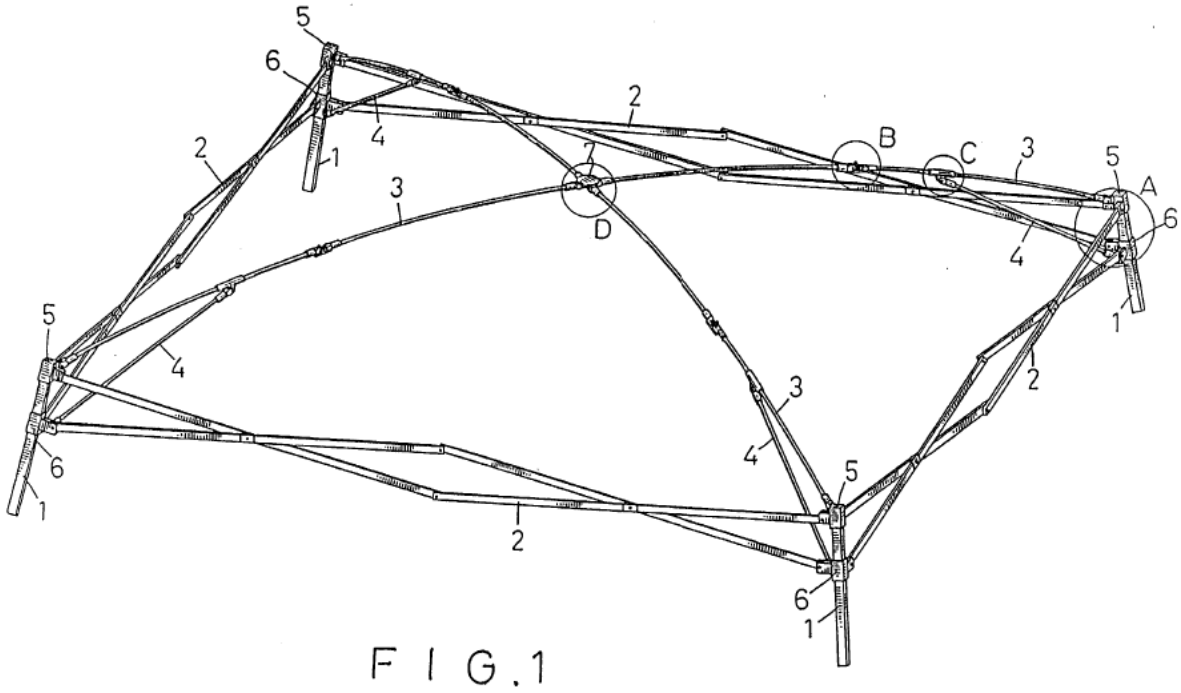

Figure 1 of Tsai depicts a collapsible shelter frame according to one embodiment. *Id.* at 5:16–17. As shown in Figure 1, the shelter frame includes a canopy support and a lower frame member that includes four upwardly extending poles 1 connected to one another by four pairs of scissors-type (or x-type) linkages 2. *See id.* at 7:4–10. Each scissors-type linkage 2 is pivotally secured to another linkage and to one of the poles 1 via fixed connector 5 and sliding connector 6. *Id.* at 7:10–15. The frame further includes four canopy supporting rods 3 that are pivotally secured at one end to head 7 and pivotally secured at the other end to one of the fixed connectors 5. *Id.* at 7:15–19. Four linking rods 4 are pivotally secured at one end to one of the canopy supporting rods 3 and pivotally secured at the other end to one of the sliding connectors 6. *Id.* at 7:17–20.

Figure 20 of Tsai is reproduced below.

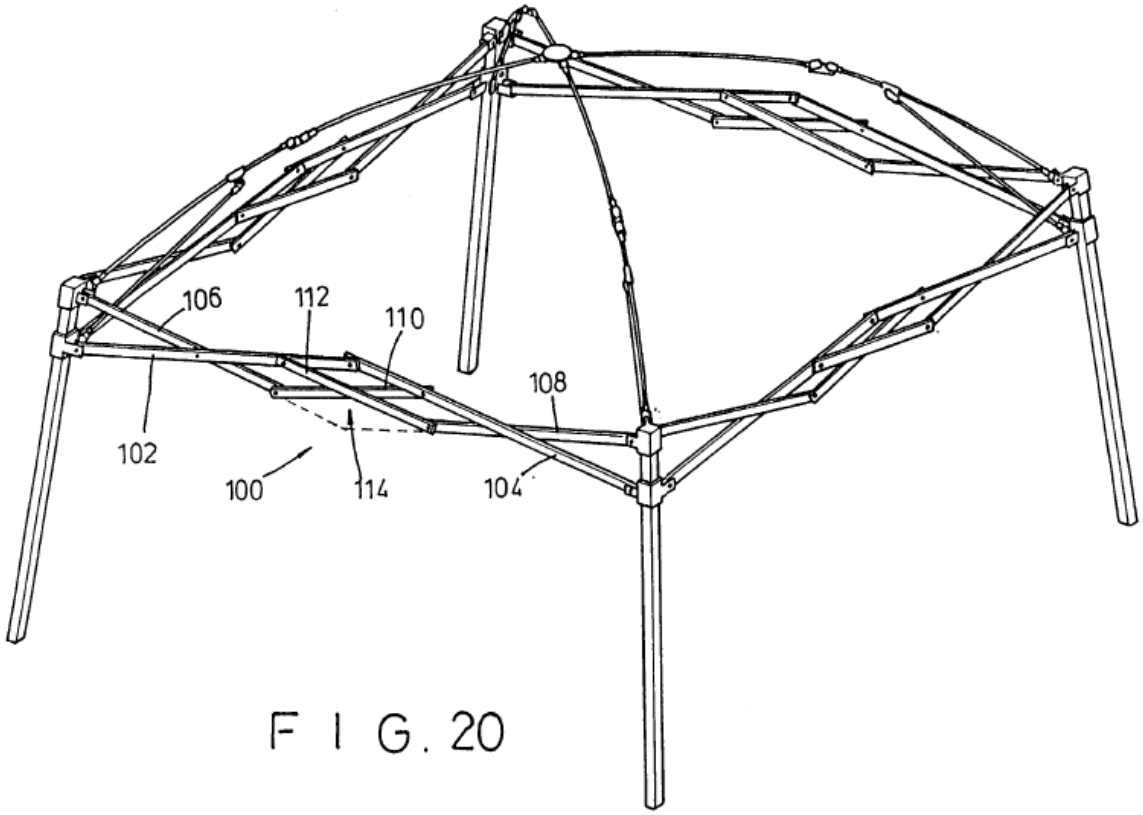

Figure 20 of Tsai depicts a shelter frame according to another embodiment. As shown in Figure 20, "[o]ne or all of the scissors-type linkage pairs shown in FIGURE[] 1 . . . may be replaced by a linkage assembly 100." *Id.* at 9:29–32. Linkage assembly 100 includes structural members 102 and 104 pivotally secured to one another and to respective sliding connectors 6. *Id.* at 9:32–35. Structural members 106 and 108 are secured to respective fixed connectors 5, and structural members 102–108 form two scissors-type linkages and operate in a scissor-like manner. *Id.* at 9:35–10:4. To eliminate the relatively low connection point associated with the structure shown in Figure 1 (shown in dashed lines in Figure 20), linkage assembly 100 also includes a linking device comprised of linking members 110 and 112. *Id.* at 10:4–8. "Linking member 110 extends from the free end of structural member 106 to structural member 104 and linking member 112

extends from the free end of structural member 108 to structural member 102." *Id.* at 10:8–12. According to Tsai, this results in a shelter frame with more headroom at point 114 midway between the poles—often the location of the entrance to the shelter. *Id.* at 10:12–15.

Tsai also describes that its shelter frame may be readily assembled, erected (or unfolded) for use and folded for storage and transport. Figure 21 of Tsai is illustrative and is reproduced below.

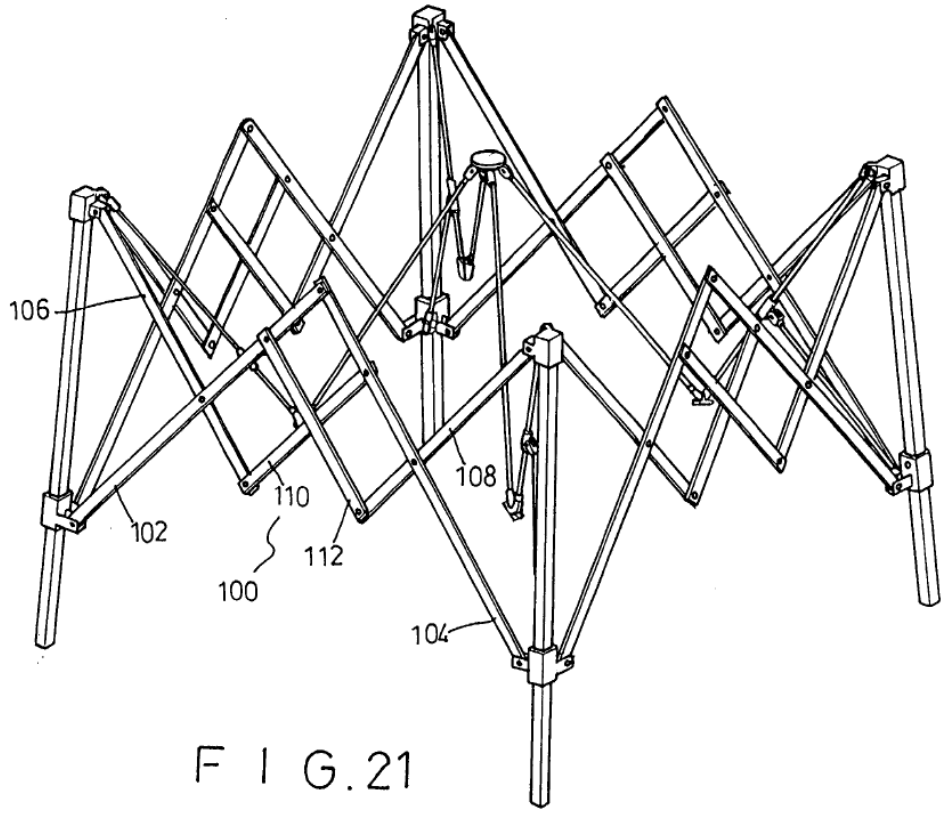

F I G. 21

Figure 21 of Tsai depicts a view of the embodiment shown in Figure 20 in a partially folded orientation. *Id.* at 6:25–27.

3. Independent Claim 1

Petitioner contends that the proposed combination of Rousselle and Tsai discloses the limitations of claim 1. Pet. 12–48. To support its arguments, Petitioner identifies certain passages in the cited references and explains the significance of each passage with respect to the corresponding

claim limitation. *Id.* Petitioner also articulates reasons to combine the relied-upon aspects of Rousselle and Tsai with a reasonable expectation of success. *Id.* at 20–22, 28–29, 34–37. Specifically, Petitioner proposes two distinct combinations of Rousselle and Tsai, which the parties refer to as the "primary modification" and the "alternative modification." *See, e.g.*, PO Resp. 15; Reply 1, 11; Tr. 5:18–23.

For the primary modification, Petitioner argues that one of ordinary skill in the art would have been motivated to add Tsai's outer retractable units to Rousselle's canopy for several reasons. *Id.* at 20–22 (citing Ex. 1002 ¶¶ 72–78; Ex. 1003, 15:59–63; Ex. 1005, 1:26–2:32; Exs. 1007–1010; *CRFD Research, Inc. v. Matal*, 876 F.3d 1330, 1347–49 (Fed. Cir. 2017); *KSR*, 550 U.S. at 417). Petitioner also argues that it would have been obvious to combine Rousselle's canopy with Tsai's inner retractable units. *Id.* at 25, 28–29 (citing Ex. 1002 ¶¶ 86–93; Ex. 1003, 15:59–63; Exs. 1004, 1007–1009; *CRFD*, 876 F.3d at 1347–49; *KSR*, 550 U.S. at 417).

For the alternative modification, Petitioner argues that one of ordinary skill in the art would have been motivated to combine Rousselle's central lock with Tsai's canopy frame that includes supporting legs, inner retractable units, and outer retractable units for several reasons. Pet. 34–37 (citing Ex. 1002 ¶¶ 101–108; Ex. 1003, 3:38–47, 15:59–63; Exs. 1003–1004; Ex. 1005, 4:29–5:5, 8:5–33, Figs. 1–2, 18–19; *CRFD*, 876 F.3d at 1347–49; *KSR*, 550 U.S. at 417). Petitioner asserts that one of ordinary skill in the art would have modified Tsai's canopy by including Rousselle's hinges 450 and center tubes 500 to connect Tsai's inner retractable units with the top and bottom of Rousselle's central lock. *Id.* at 37 (citing Ex. 1002 ¶ 108).

According to Petitioner, one of ordinary skill in the art would have been motivated to make the alternative modification because Rousselle discloses the benefits of a central lock over Tsai's individual leg locking system, such as making the canopy easier and more convenient for a single user to operate. *Id.* at 35–36 (citing Ex. 1002 ¶¶ 102–103; Ex. 1003, 3:38–47; Ex. 1005, 4:29–5:5, 8:5–33, Figs. 1, 2, 18, 19). Petitioner also argues that this proposed modification is the simple addition of one known element to another known element to obtain predictable results and uses a known technique to improve a similar device and yield predictable results. *Id.* at 36–37 (citing Ex. 1002 ¶¶ 105–107; *KSR*, 550 U.S. at 417).

In its Response, Patent Owner presents several arguments asserting that Petitioner's reasons for combining Rousselle and Tsai lack merit. PO Resp. 14–56; Sur-reply 1–25. We focus our analysis on the alternative modification because it is dispositive as to claim 1.

a) The Alternative Combination of Rousselle and Tsai

Patent Owner argues that "Tsai's shelter frame uses heavy-duty support legs, leg locks, outer units, and X-shaped members," but its alleged inner units (i.e., canopy supporting rods 3) "are more lightweight and flexible." PO Resp. 34 (citing Ex. 1005, 1:19–22, 2:12–25, 5:3–5; Ex. 2007 ¶¶ 53, 63). As such, Patent Owner argues the alternative modification would not function because "Tsai's heavy duty legs, leg locks, outer units, and X-shaped members are not capable of activation from a center lock." *Id.* at 36 (citing Ex. 2007 ¶¶ 63–64). More specifically, Patent Owner contends that Tsai's canopy supporting rods 3 "are lightweight and flexible units that function to support the canopy material," and "are not intended to drive (or [are] even capable of driving) activation of the larger and heavier outer units, X-shaped members, and legs." *Id.* at 37 (citing Ex. 1005, 4:19–22; Ex. 2007

¶¶ 53, 63–65); *see also* Sur-reply 16 (making the same argument). According to Patent Owner, the alternative modification

> would result in one of the following two outcomes: 1) no or little change as the canopy support rod flexes or bends but is unable to push the larger and heavier outer units, X-shaped members, and legs; or 2) snapping or breaking of the lighter canopy support rods under the tension created by activation of the center lock.

Id. at 38.

In reply, Petitioner first argues that Patent Owner does not point to any evidence establishing that Tsai's outer units and legs are "larger and heavier" or that Tsai's inner units are "lightweight and flexible." Reply 12–13 (citing PO Resp. 37–38; Ex. 2007 ¶¶ 53, 63–65). Petitioner contends that Tsai does not disclose that its outer units and legs are "larger and heavier." *Id.* at 12 (citing Ex. 1005; Ex. 1101, 67:5–13). Petitioner also contends that "Tsai does not disclose that its inner units are too flexible to drive the unfolding of the canopy, and indeed suggests the opposite." *Id.* at 13 (citing Ex. 1005, 4:19–22; Ex. 1102 ¶ 28).

In addition, Petitioner argues that one of ordinary skill in the art (e.g., a degreed mechanical engineer with two years of related experience) "would have recognized that it was well known that canopy frames like Tsai's were strong and lightweight, and could easily be unfolded using a central lock as in Rousselle," and "it would have been well within a [person's of ordinary skill in the art] skill to select dimensions and materials for Tsai's inner units that would allow for any needed flexibility while ensuring that the inner units were sufficiently strong to drive unfolding." Reply 12–13 (citing Ex. 1102 ¶¶ 20, 28, 30; Ex. 1009, 1:41–61; Ex. 1007 ¶ 48; Ex. 1101, 41:4–19). Thus, according to Petitioner, one of ordinary skill in the art "would have had all the necessary knowledge and creativity to implement a

working version of the alternative modification." *Id.* at 14 (citing *KSR*, 550 U.S. at 421).

We agree that Tsai does not disclose expressly that its support legs (poles 1) and outer units (scissors-type linkages 2) are larger and heavier than canopy supporting rods 3. We note that Tsai's drawings, such as Figure 1, appear to depict poles 1 and the links forming scissors-type linkages 2 as thicker than canopy supporting rods 3, but we are not directed to any disclosure in Tsai discussing the size and weight of poles 1 and scissors-type linkages 2 relative to canopy supporting rods 3 that would have suggested canopy supporting rods 3 would be incapable of transmitting sufficient force to the poles and scissors-type linkages to open the frame. We credit Dr. Stein's testimony that "Tsai contains no disclosure that its outer retractable units are large or heavy or would require significant force to be extended" and one of ordinary skill in the art "would have recognized that it was well known that canopy frames like Tsai's were not heavy or heavy-duty but were instead strong and lightweight, and could easily be unfolded using a central lock as in Rousselle." Ex. 1102 ¶ 30 (citing Ex. 1005; Ex. 1009, 1:41–61; Ex. 1007 ¶ 48).

We also agree with Petitioner's contention that Tsai does not disclose that canopy supporting rods 3 are too flexible to drive the unfolding of the canopy frame. Again, we are not directed to any express disclosure in Tsai supporting Patent Owner's assertion that canopy supporting rods 3 are flexible. Instead, Dr. Reffeor testifies that canopy supporting rods 3 are flexible because Tsai's drawings show "arched canopies and canopy supporting rods" and cross-sectionally "circular" canopy supporting rods 3 that allow for flexure. Ex. 2007 ¶ 53. We agree that Figures 1 and 20 of Tsai appear to show the canopy supporting rods slightly bowed, and this

depiction of bowed rods could have suggested that the rods have some degree of flexibility. We are not persuaded, however, that canopy supporting rods 3 are so flexible as to be incapable of transmitting sufficient unfolding force. Rather, we agree with Petitioner and Dr. Stein that Tsai's disclosure that its canopy "is less likely to sag" suggests that the canopy supporting rods are not extremely flexible or flimsy. *See* Pet. 13 (citing Ex.1005, 4:19–22; Ex. 1102 ¶ 28).

Citing Tsai's disclosure of its canopy being "less likely to sag," Dr. Stein testifies that he disagrees "that Tsai's canopy supporting rods 3 are too flexible to drive the unfolding of the canopy." Ex. 1102 ¶ 28 (citing Ex. 1005, 4:19–22). Dr. Stein also testifies that one of ordinary skill in the art "would have understood that the canopy's components, including the inner retractable units, would be made out of aluminum or a similar lightweight, strong material." *Id.* (citing Ex. 1009, 1:41–61; Ex. 1007 ¶ 48).

In contrast, Dr. Reffeor testifies that "the flexible canopy support rods 3 used in Tsai would be unable to support locking the frame in position from the center as would be required were a central locking mechanism to be added" and one of ordinary skill in the art "would see that . . . the flexible canopy support rods 3 in Tsai would not allow central deployment/activation as they would be unable to push the scissoring members outward." Ex. 2007 ¶¶ 63–64.

Weighing the competing testimony of Dr. Stein and Dr. Reffeor, we credit Dr. Stein's testimony, which is supported by corroborating references, as more persuasive evidence. Dr. Reffeor does not explain adequately why Tsai's canopy support rods 3 would have been too flexible to allow central deployment. Accordingly, Dr. Reffeor's testimony on this point comprises conclusory statements that are not supported sufficiently by objective

evidence or analysis. *See* 37 C.F.R. § 42.65(a) ("Expert testimony that does not disclose the underlying facts or data on which the opinion is based is entitled to little or no weight."); *see also Nobel Biocare Services AG v. Instradent USA, Inc.*, 903 F.3d 1365, 1382 (Fed. Cir. 2018) (explaining that the Board can reject arguments based on expert testimony that lacks specificity or detail).

We also note that Tsai's Figure 1 depicts linking rods 4 as having the same thickness as canopy supporting rods 3, which suggests that canopy supporting rods 3 and linking rods 4 would have the same degree of flexibility. Tsai also discloses that linking rods 4 are capable of transmitting unfolding forces. *See* Ex. 1005, 10:31–33 (disclosing that linking rods 4 "drive the associated canopy support rods 3 upwardly" while the frame is being unfolded). Taken together, these disclosures would have suggested to one of ordinary skill in the art that canopy supporting rods 3 are also capable of transmitting unfolding forces.

Furthermore, even if canopy supporting rods 3 as disclosed were too flexible to drive the unfolding of the canopy frame, we agree with Petitioner it would have been within the skill of one of ordinary skill in the art, given the teachings of Rousselle and Tsai, to design the canopy frame according to the alternative modification in which the rods comprising the inner units were sufficiently strong to drive the unfolding of the canopy frame. *See* Reply 12–14. Indeed, an obviousness analysis "need not seek out precise teachings directed to the specific subject matter of the challenged claim, for a court can take account of the inferences and creative steps that a person of ordinary skill in the art would employ." *KSR*, 550 U.S. at 418; *see also id*. at 421 ("A person of ordinary skill is also a person of ordinary creativity, not an automaton."). Petitioner's position is supported by Dr. Stein, who

testifies that "[i]n my experience, it would have been well within the skill of a person of ordinary skill in the art to select dimensions and materials for Tsai's inner retractable units that would allow for any needed flexibility while ensuring that the inner retractable units were sufficiently strong to drive unfolding of the canopy." Ex. 1102 ¶ 28. Moreover, Dr. Reffeor testifies, regarding Rousselle's canopy legs, that "I can make anything more rigid or less rigid. That's what engineers do all the time." Ex. 1101, 41:4–19. During the hearing, Patent Owner also agreed that engineers (i.e., a person of ordinary skill in the art in this case) are capable of trade-offs with respect to making the structural elements of a tent more or less flexible depending on the nature of the tent. Tr. 31:18–32:10.

We also are not persuaded by Patent Owner's argument that Petitioner's assertion that one of ordinary skill in the art would have been capable of implementing a working version of the alternative modification "ignores the fact that Tsai's legs are connected to one another via scissor-type linkages 2, offering no degree of freedom to invert/pivot during the folding or unfolding process." *See* Sur-reply 18. This argument is unpersuasive because the alternative modification, as proposed by Petitioner, does not require that the frame legs be inverted during folding or unfolding. Furthermore, as shown in Figures 1 and 10 of Tsai, there would be no hinderance to relative pivoting between poles 1 and the structural members of scissor-type linkages 2.

For the above reasons, we are not persuaded by Patent Owner's arguments that the alternative modification would have been inoperable.

Next, Patent Owner argues that Tsai teaches away from the alternative modification "for several reasons." PO Resp. 39. For instance, Patent Owner contends that Tsai teaches away from central activation. *Id.* at 40

(citing Ex. 1005, 4:25–28, 10:25–11:11; Ex. 2007 ¶¶ 55, 60–65); *see also id.* at 36–37 (arguing Tsai teaches away from central activation). More specifically, Patent Owner argues that Tsai teaches away from central activation because it "contemplates that folding/unfolding is driven by pulling the legs (referred to by Tsai as poles) apart." *Id.* at 29–30 (citing Ex. 1005, 4:25–28, 10:25–11:11; Ex. 2007 ¶ 64). Patent Owner also argues that "Tsai expressly disparages a solution involving a center strut for activation/locking." *Id.* at 30 (citing Ex. 1005, 1:26–2:22, Figs. 16–17; Ex. 2007 ¶¶ 55, 62). Patent Owner asserts that Tsai disparages the center strut arrangement of Figures 16 and 17 by stating that "a center strut results in difficulty setting up the tent because 'an extra person is sometimes needed to push the center strut C upwardly to its completely extended position,'" and "the structure with the center strut reduces the headroom within the tent." *Id.* at 31 (citing Ex. 1005, 2:17–22; Ex. 2007 ¶¶ 55, 62).

Furthermore, Patent Owner argues that "Tsai teaches that its solution is an improvement because it does not require the canopy support to 'be manually pushed into the unfolded orientation,'" and "[p]utting the central lock of Rousselle into Tsai's existing structure would require manual pushing in direct contradiction to Tsai's teachings." *Id.* at 40 (quoting Ex. 1005, 4:27–28).

Regarding Patent Owner's argument that Tsai relies on pulling the legs apart for unfolding the frame, Petitioner replies that "merely because a reference teaches accomplishing something one way does not constitute teaching away from all other ways of accomplishing the same goal." Reply 9 (citing *DePuy Spine, Inc. v. Medtronic Sofamor Danek, Inc.*, 567 F.3d 1314, 1327 (Fed. Cir. 2009); *UCB, Inc. v. Actavis Labs. UT, Inc.*, 65 F.4th 679, 692–93 (Fed. Cir. 2023)). According to Petitioner, none of the

disclosure cited by Patent Owner "suggests Tsai's canopy could not be unfolded using a central lock, as disclosed in Rousselle." *Id.* (citing PO Resp. 29–30; Ex. 1102 ¶ 31; *In re Keller*, 642 F.2d 413, 426 (C.C.P.A. 1981)).

Petitioner also argues that Tsai's disclosure that "an extra person is sometimes needed to push the center strut C upwardly" "has no relevance to Rousselle's canopy, which, as [Patent Owner] recognizes, can be unfolded by a single person." *Id.* at 10 (citing PO Resp. 21; Ex. 1003, 3:45–47, 13:59–67; Ex. 1102 ¶ 25). As for Tsai's disclosure that the center strut arrangement of Figures 16 and 17 reduces headroom in the tent, Petitioner argues that the canopies of Figures 16 and 17 have a different design than Rousselle's canopy. *Id.* at 10–11 (comparing Ex. 1005, Fig. 17 and Ex. 1003, Fig. 1(A)). Petitioner contends that the canopy of Figures 16 and 17 "include[s] inner units made of large 'scissors-type linkage[s]' that are located well below the canopy's roof," but "both Tsai and Rousselle disclose inner units that form a roof frame of the canopy, thereby obviating any problem of reduced headroom." *Id.* at 11 (citing Ex. 1005, 2:14–16, 3:1–8, Fig. 17; Pet. 22–23; Ex. 1003, 6:57–64, Figs. 1(A)–1(C); Ex. 1005, 8:34–9:28, Figs. 1, 20; Ex. 1102 ¶ 26; Ex. 1101, 56:19–57:12) (second alteration in original).

We agree with Petitioner that Tsai's disclosure of pulling the poles or legs apart to unfold the frame does not disparage central activation to the extent of discouraging one of ordinary skill in the art from investigating or considering Rousselle's central lock in connection with Tsai's shelter frame. *See DePuy Spine*, 567 F.3d at 1327 (holding a reference does not teach away "if it merely expresses a general preference for an alternative invention but does not 'criticize, discredit, or otherwise discourage' investigation into the

invention claimed"). Tsai discloses that the "frame *may be* erected by manually pulling the four poles 1 outwardly." Ex. 1005, 10:28–29 (emphasis added). As such, Tsai "merely expresses a general preference" for this technique (*see DePuy Spine*, 567 F.3d at 1327) and does not specifically require it. We agree with Petitioner that Tsai's general preference for this technique does not teach away from any other method for unfolding the frame.

Furthermore, Tsai's statement that the shelter frame of Figures 16 and 17 is "somewhat difficult to unfold in that an extra person is sometimes needed to push the center strut C upwardly to its completely extended position" (Ex. 1005, 2:19–22) does not disparage all other center lock configurations, in particular the configuration taught by Rousselle. As Petitioner points out, Rousselle discloses that its collapsible shelter/tent with the central lock arrangement can be erected by a single person. Ex. 1003, 13:59–65. So, instead of requiring "an extra person," the shelter frame of the combination of Tsai and Rousselle could be erected by a single person.

Similarly, Tsai's statement that the shelter frame of Figures 16 and 17 reduces headroom in the tent (Ex. 1005, 2:17–19) does not disparage all other center lock configurations. We agree with Petitioner that the inner units of both Rousselle and Tsai's Figure 1 embodiment are different than the inner units shown in Figures 16 and 17, which are large scissors-type linkages located well below the canopy's roof supported by center strut C. *See* Reply 11. In contrast, Rousselle discloses shelter/tent 10 in which collapsible frame 100 supports sheet-material cover 200. Ex. 1003, 6:30–32; Fig. 1(A). Unlike the shelter frame of Tsai's Figures 16 and 17, Rousselle's frame does not include an upwardly extending center strut propping up the sheet-material cover. Instead, sheet-material cover 200 rests directly on

band bars 320. *Id.* at Fig. 1(A). Also, Figure 1 of Tsai shows a shelter frame in which canopy supporting rods 3 (i.e., the "inner units") form a canopy support for supporting the canopy material. Ex. 1005, 4:11–25, 7:15–20. Accordingly, neither Rousselle's or Tsai's frames present the headroom issue that Tsai identifies with respect to the prior art shelter frame of Figures 16 and 17.

In response to Petitioner's argument that none of the disclosure cited by Patent Owner "suggests Tsai's canopy could not be unfolded using a central lock, as disclosed in Rousselle," Patent Owner argues that Tsai's canopy supporting rods 3 are flexible elements that would have been unable to support locking the shelter frame in an unfolded configuration. Sur-reply 14–15 (citing Reply 9; Ex. 2007 ¶¶ 53, 63). For the reasons discussed above, however, we find Patent Owner's arguments based on the flexibility of the canopy supporting rods unpersuasive.

In view of the above, we disagree that Tsai teaches away from the alternative modification. For the same reasons, we are not persuaded by Patent Owner's arguments that Tsai contradicts the asserted benefits of modifying Tsai with Rousselle's central lock. *See* PO Resp. 41–43.

Next, Patent Owner asserts that the alternative modification relies on conclusory statements by Dr. Stein. PO Resp. 38–39. According to Patent Owner, "Petitioner relies on its Expert's largely conclusory testimony to prove an alleged motivation to combine. Most statements from Petitioner's Expert discussing a motivation to combine are essentially conclusory, formulaic recitations lacking articulated reasoning." *Id.* at 39. We agree with Petitioner, however, that the Patent Owner Response fails to identify the specific testimony alleged to be conclusory. *See* Reply 15.

In reply, Patent Owner argues that its Response provided extensive detail regarding alleged "contradictions," such as Dr. Stein allegedly not properly accounting for Tsai's disparagement of central activation, ignoring Tsai's express teachings regarding the intended method of pulling outward on the legs to unfold the canopy, and ignoring Tsai's statements about avoiding a manual upward pushing action to move the canopy upward into the unfolded orientation. Sur-reply 19. However, these alleged "contradictions" do not identify any conclusory testimony. Furthermore, we find that Dr. Stein's testimony that we rely on in this Decision is not conclusory. For instance, Dr. Stein's testimony that one of ordinary skill in the art "would have understood that the canopy's components, including the inner retractable units, would be made out of aluminum or a similar lightweight, strong material" is supported by corroborating prior art references. Ex. 1102 ¶ 28 (citing Ex. 1009, 1:41–61; Ex. 1007 ¶ 48).

Accordingly, we disagree that Dr. Stein's testimony improperly relies on conclusory statements, and we find Patent Owner's argument unpersuasive.

Last, Patent Owner presents several arguments asserting that Petitioner does not provide a workable solution for Tsai's leg locks. PO Resp. 43–45; Sur-reply 20–22. For instance, Patent Owner argues that "Tsai is not directed to umbrella tents, relies on leg locks while expressly disparaging other locking mechanisms, and teaches away from central activation and locking." PO Resp. 44. But for the reasons discussed above, we disagree that Tsai teaches away from the alternative modification.

Patent Owner also asserts that removing Tsai's leg locks from the combination of Rousselle and Tsai "would completely obviate Tsai as the primary reference," "would require a significant change in the principle of

operation of [Tsai], contrary to long-established principles of determining obviousness," and "render[] Tsai unsatisfactory for its intended purpose." *Id.* at 44–45 (citing Ex. 1005, 5:3–5; *In re Ratti*, 270 F.2d 810, 813 (CCPA 1959); *In re Gordon*, 733 F.2d 900, 902 (Fed. Cir. 1984)). This argument is not persuasive because we agree with Petitioner that leg locks do not form Tsai's main principle of operation. *See* Reply 17–18 (citing Ex. 1005, 3:11–4:10; Ex. 1101, 50:7–9; Ex. 1102 ¶ 23). Indeed, Tsai indicates that "[a] general object of the present invention is to provide a collapsible shelter that is superior to those presently known in the art," and "one object of the present invention is to provide a shelter frame that is relatively easy to fold and unfold, stable, and still compact when folded." Ex. 1005, 3:11–16. So even though Tsai discloses leg locks as the means for locking the shelter frame, the leg locks are not critical to the object of providing a shelter frame that is relatively easy to fold and unfold, stable, and compact when folded.

We also agree with Petitioner's contention that Patent Owner overlooks that the Petition did not exclusively propose removing the leg locks—the Petition also proposed retaining Tsai's leg locks while adding Rousselle's central lock. *See* Reply 18–19 (citing Pet. 36). Patent Owner replies that "no support or articulation is offered for this combination, and Petitioner does not address how the alleged benefits of Rousselle's central lock . . . could be realized when Tsai's multiple leg locks are retained." Sur-reply 21. The Petition, however, does describe retaining the leg locks as part of the alternative modification and articulates a reason, supported by testimony from Dr. Stein, for doing so (i.e., providing "increased assurance that the canopy would stay in the erected or locked position and would not collapse"). Pet. 36 (citing Ex. 1003 ¶ 103). Furthermore, Patent Owner's argument that retaining the leg locks would mean the alternative

modification would suffer from the drawbacks identified in the ’738 patent is not relevant to the obviousness analysis because claim 1 does not preclude leg locks. *See* Sur-reply 21.

Patent Owner asserts further that neither Petitioner nor Dr. Stein “points to any teaching, suggestion, or motivation in either reference” to replace Tsai’s leg locks with Rousselle’s central lock. PO Resp. 44 (citing Pet. 36; Ex. 1002 ¶ 103). Petitioner disagrees, arguing that the Petition cites “voluminous disclosure” from Rousselle identifying the benefits of a central lock. Reply 18 (citing Pet. 35). We agree with Petitioner. The Petition provides several rationales, supported by Dr. Stein’s testimony, for making the alternative modification. Pet. 35–37. For instance, Petitioner argues that one of ordinary skill in the art would have been motivated to make this modification because Rousselle discloses the benefits of a central lock over Tsai’s individual leg locking system, such as making the canopy easier and more convenient for a single user to operate. *Id.* at 35–36 (citing Ex. 1002 ¶¶ 102–103; Ex. 1003, 3:38–47; Ex. 1005, 4:29–5:5, 8:5–33, Figs. 1, 2, 18, 19). Petitioner also argues that the proposed modification is the simple addition of one known element to another known element to obtain predictable results and uses a known technique to improve a similar device and yield predictable results. *Id.* at 36–37 (citing Ex. 1002 ¶¶ 105–107; *KSR*, 550 U.S. at 417). We have reviewed Petitioner’s arguments and evidence and find the reasons to combine persuasive.

In sum, we determine that Petitioner’s proposed reasons to combine Rousselle and Tsai in accordance with the alternative modification are realistic, have rational underpinning, and are supported by expert testimony, which we find persuasive and credit. Thus, Petitioner’s evidence shows that a skilled artisan would have had reasons to combine the teachings of

Rousselle and Tsai and would have had a reasonable expectation of success in doing so.

b) The Limitations of Claim 1

Patent Owner does not address Petitioner's contentions regarding the limitations of claim 1 in the Response. *See generally* PO Resp. We need not set forth formal findings as to the undisputed assertions by Petitioner that the combination of Rousselle and Tsai discloses the limitations of claim 1. *See LG Elecs., Inc. v. Conversant Wireless Licensing S.A.R.L.*, 759 F. App'x 917, 925 (Fed. Cir. 2019) ("The Board is 'not required to address undisputed matters' or arguments about limitations with which it was never presented." (quoting *In re Nuvasive, Inc.*, 841 F.3d 966, 974 (Fed. Cir. 2016))). Also, we cautioned Patent Owner "that any arguments not raised in the response may be deemed waived." Paper 10, 9; *cf.* 37 C.F.R. § 42.23(a) ("Any material fact not specifically denied may be considered admitted."). Nevertheless, we have reviewed Petitioner's contentions with respect to the limitations of claim 1 and find that the combination of Rousselle and Tsai discloses these limitations as set forth by Petitioner. *See* Pet. 12–48.

c) Conclusion

For the above reasons, we determine that Petitioner has shown by a preponderance of the evidence that claim 1 is unpatentable over the combination of Rousselle and Tsai.

4. Dependent Claim 2

Claim 2 depends from claim 1 and recites, among other features, that each supporting leg comprises a sliding sleeve for moving along a respective supporting leg. Ex. 1001, 10:36–51. Petitioner provides reasonable and detailed explanations, supported with the testimony of Dr. Stein, indicating where the combination of Rousselle and Tsai discloses the limitations of

claim 2. Pet. 49–61. In particular, Petitioner argues that Tsai's sliding connectors 6 satisfy the claimed sliding sleeve. *Id.* at 49–50 (citing Ex. 1005, 7:4–20, Fig. 2; Ex. 1002 ¶¶ 131–133).

Patent Owner argues that the alternative modification suffers the same deficiencies identified with respect to independent claim 1, namely that "Tsai teaches away from a central locking mechanism and there is no teaching, suggestion, or motivation to add Tsai's locking sliding sleeves into Rousselle's centrally activated umbrella tent." PO Resp. 47 (citing Ex. 1005, 2:12–25, 5:3–5, 8:5–33). We find Patent Owner's arguments regarding claim 1, including the argument the Tsai teaches away, unpersuasive for the reasons discussed above. Furthermore, Petitioner's alternative modification, which involves modifying Tsai's canopy frame by adding Rousselle's central lock, does not propose adding "Tsai's locking sliding sleeves into Rousselle's centrally activated umbrella tent." *See* Pet. 34–37. Accordingly, Patent Owner's arguments regarding claim 2 are not persuasive.

Based on the full record, we determine that Petitioner has shown by a preponderance of the evidence that claim 2 unpatentable over the combination of Rousselle and Tsai.

5. Dependent Claims 4 and 14

Claim 4 depends from claim 1, and claim 14 depends from claim 4. Petitioner provides reasonable and detailed explanations, supported with the testimony of Dr. Stein, indicating where the combination of Rousselle and Tsai discloses the limitations of claims 4 and 14. Pet. 61–73. Patent Owner offers no specific argument disputing Petitioner's contentions with respect to these claims aside from the arguments Patent Owner directs to claim 1, which we have addressed above. PO Resp. 48.

We have considered the evidence and arguments of record and determine that Petitioner has demonstrated by a preponderance of the evidence that claims 4 and 14 are unpatentable over the combination of Rousselle and Tsai for the reasons discussed in the Petition and as supported by the testimony of Dr. Stein.

E. Asserted Obviousness Based on Rousselle, Tsai, and Ohnishi

Petitioner also challenges claims 4, 13, and 14, which depend from claim 1, as unpatentable under 35 U.S.C. § 103 based on the combination of Rousselle, Tsai, and Ohnishi. Pet. 74–90.

Petitioner relies on Ohnishi as disclosing a central lock having center pole 63 that is clamped by locking piece 65, 67. *Id.* at 74 (citing Ex. 1006, 7:18–8:19, Figs. 9–11). Petitioner also provides reasons, supported with the testimony of Dr. Stein, for why it would have been obvious to one of ordinary skill in the art to combine Ohnishi's locking piece with Rousselle's lock, and thereby replace Rousselle's locking piece, with a reasonable expectation of success. *Id.* at 81–83 (citing Ex. 1002 ¶¶ 193–198). Petitioner also provides analysis purporting to show where certain limitations of claims 4, 13, and 14 are disclosed by the combination of Rousselle, Tsai, and Ohnishi. *Id.* at 75–81, 83–90.

In its Response, Patent Owner states that it "avoids any repetitious discussion of Rousselle and Tsai, and only notes that Ground 2 would be deficient and inoperable for the same reasons discussed with respect to Ground 1." PO Resp. 57. Patent Owner also "contends the Ohnishi reference does not relate to canopies and thus does not and cannot remedy any of the deficiencies with the structures of Rousselle and Tsai." *Id.* Patent Owner provides no other specific argument disputing Petitioner's contentions that the combination of Rousselle, Tsai, and Ohnishi discloses

claims 4, 13, and 14. *See generally* PO Resp.; *see also* Tr. 35:3–4 (Patent Owner's counsel stating that "our primary argument has been Ground 1 and not Ground 2").

We need not set forth formal findings as to the undisputed assertions by Petitioner that the combination of Rousselle, Tsai, and Ohnishi renders claims 4, 13, and 14 unpatentable. *See LG Elecs.*, 759 F. App'x at 925; 37 C.F.R. § 42.23(a). Nevertheless, we have reviewed Petitioner's contentions and are persuaded that Petitioner has shown by a preponderance of the evidence that claims 4, 13, and 14 are unpatentable over the combination of Rousselle, Tsai, and Ohnishi. *See* Pet. 74–90.

F. Collateral Estoppel

Relying on the final written decision that has been issued in IPR2021-00365 (Ex. 1016), Petitioner asserts that the doctrine of collateral estoppel "compels a finding that at least claims 1 and 4 of the '738 patent are invalid as obvious." Pet. 90. Petitioner provides a table comparing claims 1 and 4 of the '738 patent to allegedly corresponding claims of U.S. Patent No. 10,273,710, the patent challenged in IPR2021-00365. *Id.* at 91–93. According to Petitioner, the differences between the claims of the two patents are not substantive and do not materially affect the invalidity determination, and therefore the issues of patentability in the two proceedings are identical. *Id.* at 94–96. Patent Owner argues that collateral estoppel should not be applied because the issues are not the same. PO Resp. 60–63.

Because of our determination that Petitioner establishes by a preponderance of the evidence that all challenged claims would have been unpatentable, we do not reach this alternate challenge to claims 1 and 4. *See SAS Inst. Inc. v. Iancu*, 138 S. Ct. 1348, 1359 (2018) (holding that a

petitioner "is entitled to a final written decision addressing all of the claims it has challenged"); *see also Boston Sci. Scimed, Inc. v. Cook Grp. Inc.*, 809 F. App'x 984, 990 (Fed. Cir. 2020) (nonprecedential) (stating that the "Board need not address issues that are not necessary to the resolution of the proceeding," such as "alternative arguments with respect to claims [the Board] found unpatentable on other grounds").

III. PATENT OWNER'S REVISED MOTION TO AMEND

In its Revised Motion to Amend, Patent Owner requests that we cancel claims 1, 2, 4, 13, and 14 of the '738 patent and replace them with proposed substitute claims 15–19. RMTA 1. This Motion is contingent on our determination that any of claims 1, 2, 4, 13, and 14 is unpatentable. *Id.* Because we determine, as explained above, that Petitioner has shown by a preponderance of the evidence that original claims 1, 2, 4, 13, and 14 are unpatentable, we proceed to address Patent Owner's Revised Motion to Amend.

A. The Proposed Substitute Claims

Patent Owner proposes to amend the '738 patent by adding new claims 15–19 as respective substitutes for original claims 1, 2, 4, 13, and 14. RMTA 1, 27–30 (Claims App.). Claim 15 is proposed as a substitute for original claim 1 and is reproduced below, with underscoring to indicate subject matter added to original claim 1.

> 15. A collapsible canopy frame, comprising:
>
> A. at least three supporting legs,
>
> B. a plurality of outer retractable units, each outer retractable unit connected between two adjacent supporting legs, each said outer retractable unit comprises a plurality of hinged X-shaped rod members, each X-shaped rod member comprises a first eave pipe and second eave pipe hinged to one another,

C. a plurality of inner retractable units comprising inner ends, each inner retractable unit connected to a supporting leg, wherein said outer retractable units and said inner retractable units form a roof of said collapsible canopy frame, and

D. a central lock, comprising:

1. a center top cap,

2. a center bottom cap,

3. a center pole positioned between said center top cap and said center bottom cap, wherein said central lock is locked when said center pole is connected to both said center top cap and said center bottom cap, and wherein said center lock is unlocked when there is a disconnection between said center bottom cap and said center pole, wherein said central lock locks said collapsible canopy frame in an unfolded state when said central lock is locked and permits said collapsible canopy frame to be folded into a folded state when said central lock is unlocked, wherein said inner ends of said inner retractable units are connected through said central lock, <u>and</u>

<u>4. a locking piece received in said center bottom cap, wherein said center bottom cap comprises a bottom cap seat and a bottom cap cover that are connected to one another, wherein said bottom cap seat is located between said bottom cap cover and said center top cap, wherein said bottom cap seat is provided with a bottom cap seat through hole through which said center pole can enter, a receiving chamber is provided in said center bottom cap at a junction between said bottom cap seat and said bottom cap cover, and wherein said locking piece is located within said receiving chamber and between said bottom cap cover and said bottom cap seat;</u>

<u>wherein a first connecting rod is hinged with a connection piece of said bottom cap seat;</u>

<u>wherein said collapsible canopy frame is moved to said unfolded state by pushing said center bottom cap upwards to drive said plurality of inner retractable units</u>

> outwardly, which causes said plurality of outer retractable units and said at least three supporting legs to extend outwards, until said center bottom cap is connected with said center top cap.

RMTA 27–28 (Claims App.).

Claim 16 is proposed as a substitute for original claim 2 and is reproduced below, with brackets or strikethrough to indicate deletions and underscoring to indicate additions.

> 16. The collapsible canopy frame according as in claim [[1]] 15, wherein: each said outer retractable unit comprises three hinged X-shaped rod members, each said supporting leg comprises a sliding sleeve that is moved ~~for moving~~ along a length direction of said respective supporting leg by said pushing of said center bottom cap, an upper end of each said supporting leg is fixed with a fixed joint, each said inner retractable unit comprises a first oblique top pipe and a second oblique top pipe hinged to one another, said first oblique top pipe is hinged with [[a]] said first connecting rod, said second oblique top pipe is hinged with a second connecting rod, an inner end of said first oblique top pipe is hinged with [[a]] said center top cap of said central lock, an inner end of said first connecting rod is disposed within a receiving groove formed by at least two connection pieces of said bottom cap seat ~~hinged with a center bottom cap of said central lock~~, and, in said unfolded state, said first connecting rod extends from said bottom cap seat to said first oblique top pipe to form a Y-shaped member, an outer end of a first eave pipe and an outer end of said second oblique top pipe are hinged with said fixed joint, an outer end of said second eave pipe and an outer end of said second connecting rod are hinged with said sliding sleeve.

RMTA 28–29 (Claims App.).

Claim 17 is proposed as a substitute for original claim 3 and is reproduced below, with brackets to indicate deletions and underscoring to indicate additions.

> 17. The collapsible canopy frame as in claim [[1]] 15, where said central lock further comprises: [[a]] said locking piece, wherein said locking piece is capable of moving back and forth along a radial direction of said center pole, wherein said locking piece is received in said center bottom cap, a first through hole through which said center pole can pass through is provided in said locking piece, and an end portion of said center pole is provided with a clamping groove and a clamp locking part located at the lower end of said clamping groove; when said central lock is in a locked state, part of an inner wall of said first through hole of said locking piece is clamped with said clamping groove of said center pole, [[and]] an upper end surface of said clamp locking part abuts against a lower end surface of said locking piece, and said first connecting rod is hinged with said connection piece at a location above said clamp locking part of said center pole; and when said central lock is in said unlocked state, said inner wall of said first through hole of said locking piece is separated from said clamping groove and said clamp locking part can pass through said first through hole.

RMTA 29 (Claims App.).

Claim 18 is a proposed substitute for claim 13 that amends the dependency to claim 17, and claim 19 is a proposed substitute for claim 14 that amends the dependency to claim 17. *Id.* at 30 (Claims App.).

B. Statutory and Regulatory Requirements

In reviewing a motion to amend, we consider whether the motion meets the statutory and regulatory requirements set forth in 35 U.S.C. § 316(d) and 37 C.F.R. § 42.121. *Lectrosonics, Inc. v. Zaxcom, Inc.*, Case IPR2018-01129 (PTAB Feb. 25, 2019) (Paper 15) (precedential). That is, the patent owner must demonstrate the following: (1) the amendment proposes a reasonable number of substitute claims; (2) the amendment responds to a ground of unpatentability involved in the trial; and (3) the amendment does not seek to enlarge the scope of the claims of the patent or

introduce new subject matter. *See* 35 U.S.C. § 316(d); 37 C.F.R. § 42.121; *see also Lectrosonics*, Paper 15 at 4–8.

1. Reasonable Number of Substitute Claims

Patent Owner asserts that "[o]nly one substitute claim for each of challenged claims 1, 2, 4, 13, and 14 is proposed." RMTA 11. Patent Owner proposes five substitute claims (numbered 15–19) to replace five challenged claims (claims 1, 2, 4, 13, and 14) and thus this motion presents a presumptively reasonable number of substitute claims in accordance with 37 C.F.R. § 42.121(a)(3) ("The presumption is that only one substitute claim would be needed to replace each challenged claim, and it may be rebutted by a demonstration of need."). Petitioner does not argue otherwise. *See generally* Opp. RMTA; Sur-reply RMTA.

2. Amendments Responsive to a Ground of Unpatentability

Patent Owner asserts that the amendments respond to at least one asserted ground of unpatentability. RMTA 11–12. Petitioner does not argue otherwise. *See generally* Opp. RMTA; Sur-reply RMTA. Because the amendments attempt to distinguish over at least Rousselle and Tsai, we determine that the proposed amendments are responsive to a ground of unpatentability involved in this trial.

3. Scope of the Claims

Patent Owner asserts that the proposed substitute claims do not enlarge the scope of the challenged claims. RMTA 11. The amendments do not enlarge the scope of the claims but include narrowing limitations to the original claims or merely amend claim dependency. *See* RMTA, Claim App. Petitioner does not argue otherwise. *See generally* Opp. RMTA; Sur-reply RMTA.

4. New Matter

Patent Owner provides tables identifying written description support for substitute claims 15–19. RMTA 3–11. Patent Owner asserts that no new matter is added. *Id.* at 11.

Having considered the original disclosure of the '738 patent, we find that Patent Owner has sufficiently set forth adequate written description support for proposed substitute claims 15–19 and does not introduce new matter. Petitioner does not argue otherwise. *See generally* Opp. RMTA; Sur-reply RMTA.

C. Patentability Analysis of the Proposed Substitute Claims

"A petitioner bears the burden of persuasion to show, by a preponderance of the evidence, that any proposed substitute claims are unpatentable." 37 C.F.R. § 42.221(d)(2); *see also Lectrosonics*, Paper 15 at 4 (citing *Aqua Prods. Inc. v. Matal*, 872 F.3d 1290 (Fed. Cir. 2017); *Bosch Auto. Serv. Sols. LLC v. Iancu*, 878 F.3d 1027 (Fed. Cir. 2017)). In determining whether a petitioner has proven unpatentability of the proposed substitute claims, the Board focuses on "arguments and theories raised by the petitioner in its petition or Opposition to the Motion to Amend." *Nike, Inc. v. Adidas AG*, 955 F.3d 45, 51 (Fed. Cir. 2020). Petitioner argues that the proposed claims are obvious Rousselle, Tsai, Ohnishi, Hoober,[6] and Seo.[7] RMTA Opp. 1. We first provide brief overviews of Hoober and Seo before we evaluate this challenge below.

[6] US 3,611,513, issued Nov. 12, 1969 (Ex. 1203).
[7] US 2005/0097829 A1, published May 12, 2005 (Ex. 1204).

1. Hoober

Hoober "relates to jewelry clasps, and more particularly to locking jewelry clasps for use in securing necklaces, bracelets, watchbands and the like." Ex. 1203, 1:19–21. Figure 2 is reproduced below.

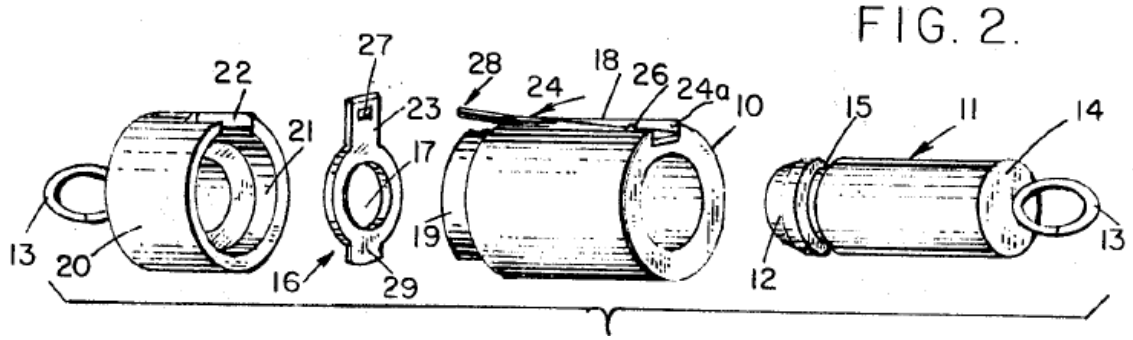

Figure 2 is an exploded view of Hoober's jewelry clasp. *Id.* at 2:34–35. As shown in Figure 2, the jewelry clasp comprises female member 10 and cooperating male member 11. *Id.* at 2:49–50.

Male member 11 is an elongate rod or plunger having beveled nose 12 at one end, and bearing ring 13 or other similar attachment means for a necklace or watchband on exterior surface 14, opposite the beveled nose. *Id.* at 2:61–65. Directly behind beveled nose 12 is groove 15, which is adapted to receive locking member or catch 16. *Id.* at 2:65–67.

Female member 10 is comprised of main body 18 having shoulder 19 of reduced diameter at one end, and cap 20, which is closed at one end and has collar 21 adapted to mate with shoulder 19 at its open end. *Id.* at 3:1–4. The collar is provided with notch or cut-out 22, which accepts the upper portion or tab 23 of locking member or catch 16, and positions it to receive flat spring 24. *Id.* at 3:5–8. Locking member 16 has central aperture 17 and is formed of a flat metal stamping or a molded plastic. *Id.* at 3:13–14. The thickness of locking member 16 is such that it will seat comparatively easily in groove 15. *Id.* at 3:15–16. Central aperture 17 has a diameter which is

slightly larger than that of male member 11, and is formed to a shape which admits the male member. *Id.* at 3:16–18, 21–22. Upper portion or tab 23 of locking member 16 protrudes through notch 22 and has slot 27, which serves to receive free end 28 of flat spring 24. *Id.* at 3:18–20.

In operation, male member 11 is inserted into main body 18 and moved slidably forward towards cap 20, to lock the clasp. *Id.* at 3:32–34. Beveled nose 12 on male member 11 guides it through central aperture 17 of locking member 16 and acts as a cam against the peripheral surface of the central aperture 17 of the locking member, temporarily displacing it to permit the complete insertion of male member 11. *Id.* at 3:34–39. When groove 15 reaches the proper position in registration with locking member 11, flat spring 24 pulls the locking member into this groove, and the clasp is positively locked. *Id.* at 3:39–42.

2. Seo

Seo "relates to collapsible canopies, and more particularly to collapsible canopies whose length is reduced upon collapsing." Ex. 1204 ¶ 1. Figure 1 of Seo is reproduced below.

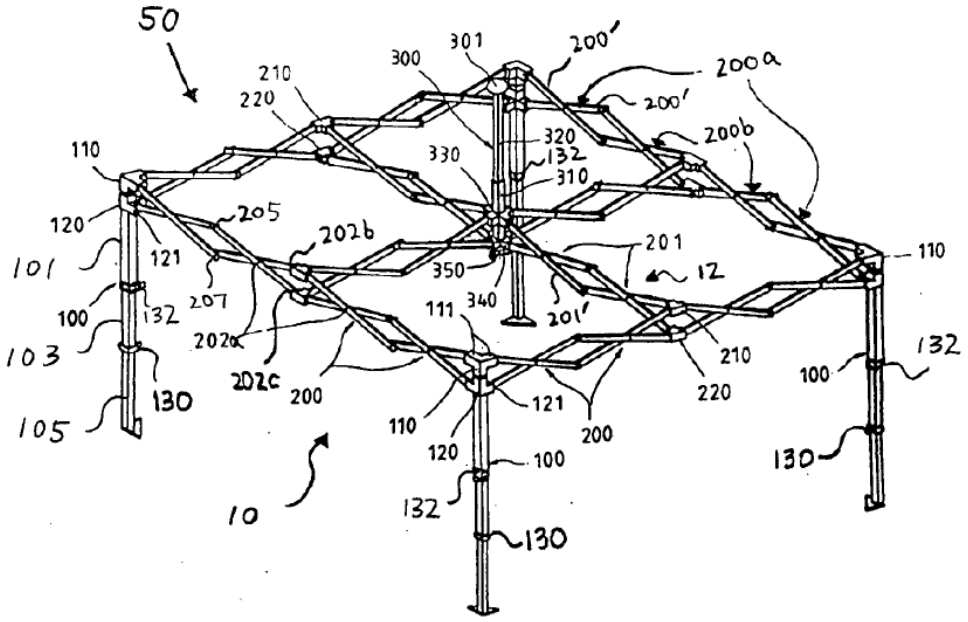

Figure 1 is a perspective view of a collapsible canopy frame. *Id.* ¶ 8. Canopy frame 50 includes four telescoping side poles 100 and edge scissor assemblies 200 that interconnect each pair of adjacent side poles 100. *Id.* ¶ 22. Side poles 100 are structured such that each side pole is located at one of the four corners of a square. *Id.* Each pair of adjacent side poles 100 are interconnected to each other through four edge scissor assemblies 200. *Id.* The edge scissor assemblies include inner edge scissor assemblies 200b and outer edge scissor assemblies 200a depending on their location with respect to other edge scissor assemblies. *Id.*

3. Substitute Claim 15

a) Petitioner's Assertions

(1) "a locking piece received in said center bottom cap."

Petitioner asserts that Rousselle and Ohnishi each disclose a locking piece received in a center bottom cap. RMTA Opp. 2–3. Petitioner provides annotated versions of Rousselle's Figure 2(A) and Ohnishi's Figure 9, which we reproduce below.

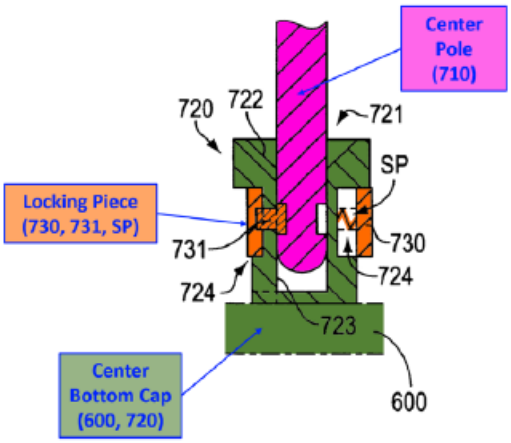

FIG. 2(A)

FIG. 9

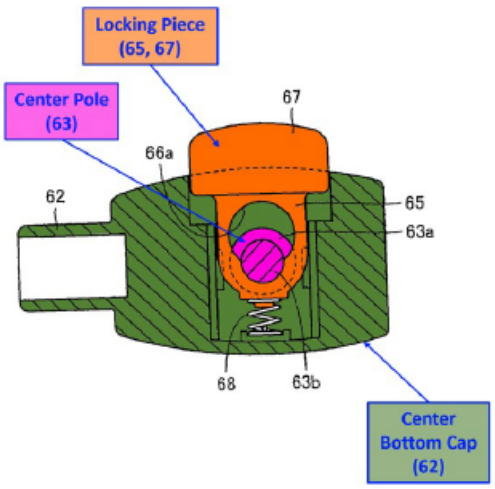

Rousselle's Figure 2(A) shows locking piece 730, 731 highlighted in orange and the center pole and center bottom cap highlighted in pink and green,

respectively. Ohnishi's Figure 9 shows locking piece 65, 67 highlighted in orange and the center pole and center bottom cap highlighted in pink and green, respectively.

Petitioner asserts that the Petition explains why one of ordinary skill in the art would have been motivated to combine Ohnishi's locking piece with Rousselle's lock. RMTA Opp. 2–3 (citing Pet. 81–83; Ex. 1002 ¶¶ 194–198; Ex. 1102 ¶¶ 41–44). Thus, according to Petitioner, both Rousselle and Ohnishi disclose or suggest this limitation. *Id.* at 3.

(2) "said center bottom cap comprises a bottom cap seat and a bottom cap cover that are connected to one another, wherein said bottom cap seat is located between said bottom cap cover and said center top cap," "a receiving chamber is provided in said center bottom cap at a junction between said bottom cap seat and said bottom cap cover," and "locking piece is located within said receiving chamber and between said bottom cap cover and said bottom cap seat."

Petitioner asserts that a person of ordinary skill in the art would have been motivated to replace Rousselle's locking piece with Ohnishi's and "for ease of manufacturing and maintenance, a POSITA would have recognized that it would be advantageous to have easy access to insert and remove the locking piece." RMTA Opp. 3–4 (citing Ex. 1202 ¶ 9). According to Petitioner, "a POSITA would have understood that there are a finite number of identified, predictable solutions" and "[o]ne such solution is simply to manufacture the bottom cap in two pieces (e.g., a bottom cap seat and bottom cap cover) that meet where the locking piece is to be located." *Id.* at 4 (citing Ex. 1202 ¶ 10). Petitioner provides another annotated version of Figure 2(A) of Rousselle, reproduced below, to illustrate Petitioner's proposed modification.

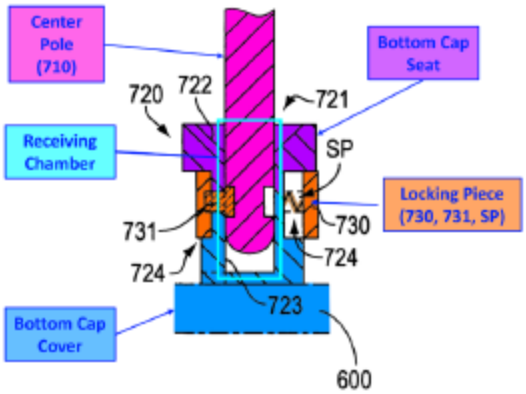

FIG. 2(A)

As an alternative position, Petitioner relies on Hoober as disclosing a jewelry clasp having a locking mechanism similar to that of Rousselle and Ohnishi. RMTA Opp. 5. At the oral hearing, Petitioner's counsel indicated that "Hoober is our primary argument here." Tr. 15:19–20.

Petitioner asserts Hoober discloses s locking mechanism including center bottom cap 10 and center pole 11 that is engaged by locking piece 16. RMTA Opp. 5 (citing Ex. 1203, Fig. 3, Ex. 1202 ¶ 13). Petitioner provides an annotated version of Hoober's Figure 3, which we reproduced below.

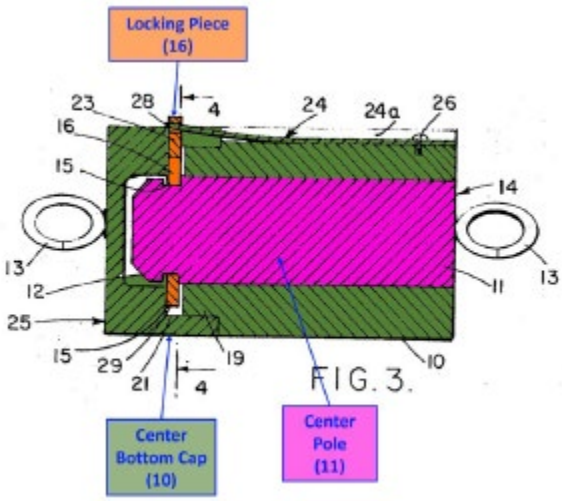

Id. The annotated version of Figure 3 depicts Hoober's clasp with locking piece 16 highlighted in orange, center pole 11 highlighted in pink, and center bottom cap 10 highlighted in green.

Petitioner argues that Hoober's center bottom cap comprises two pieces: "main body 18" and "cap 20." *Id.* at 5–6 (citing Ex. 1203, 3:1–5, Fig. 3). According to Petitioner, "Hoober discloses that the center bottom cap is 'adapted internally to receive a male member' 11, including through 'central aperture 17' of the locking piece 16, and thus comprises a receiving chamber that extends between main body 18 (bottom cap seat) and cap 20 (bottom cap cover)." *Id.* at 6. Petitioner also asserts that "Hoober's locking piece 16 is located in the receiving chamber and between the bottom cap seat and bottom cap cover." *Id.* Petitioner provides annotated versions of Hoober's Figures 2 and 3, reproduced below, to illustrate these assertions.

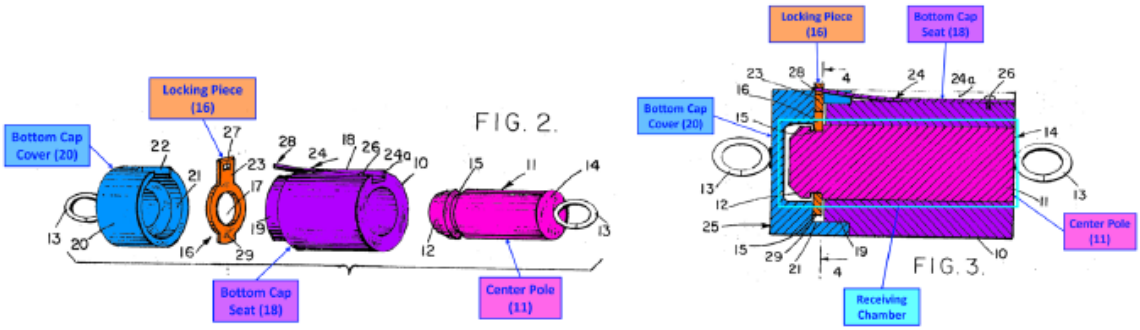

Id. The annotated versions of Figures 2 and 3 depict Hoober's clasp with locking piece 16 highlighted in orange, center pole 11 highlighted in pink, bottom cap cover 20 highlighted in blue, and bottom cap seat 18 highlighted in purple.

Petitioner then argues that one of ordinary skill in the art "would have been motivated to include a bottom cap seat and bottom cap cover in Rousselle's center bottom cap when modifying it to include Ohnishi's locking piece." *Id.* Specifically, Petitioner asserts that:

> For ease of manufacturing and maintenance, a [person of ordinary skill in the art] would have recognized that it would be advantageous to have easy access to insert and remove the locking piece from the lock. Ex. 1002 ¶15. The arrangement

> shown in Hoober, where the locking piece sits between a bottom cap seat and a removable bottom cap cover, provides such easy access to the locking piece. *Id.* Thus, a [person of ordinary skill in the art] would have been motivated to incorporate such an arrangement in the combination of Rousselle and Ohnishi. *Id.* Furthermore, such an arrangement was known in the art, as evidenced by Hoober and other references, leading a [person of ordinary skill in the art] to reasonably expect success in the combination. *Id.* (citing Exs. 1103, 1203).

Id. at 6–7.

(3) "said bottom cap seat is provided with a bottom cap seat through hole through which said center pole can enter."

Petitioner contends that Hoober discloses this limitation. RMTA Opp. 8. Petitioner provides another annotated version of Hoober's Figure 2, reproduced below, to illustrate Petitioner's position that "Figure 2 of Hoober shows the bottom cap seat through hole which allows the center pole 11 to enter."

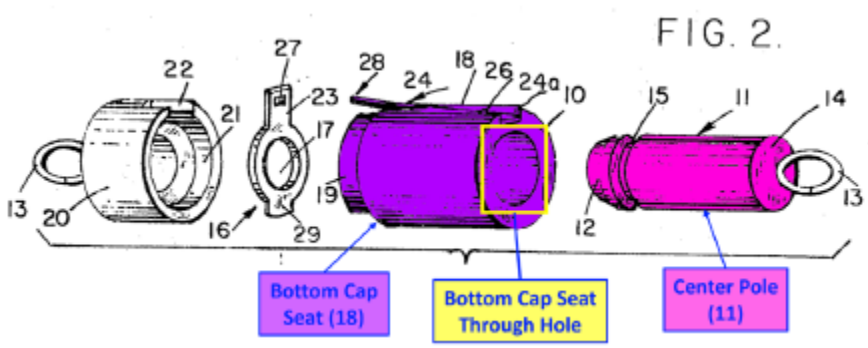

Id. (citing Ex. 1202 ¶ 21). This annotated version of Figure 2 depicts Hoober's clasp with center pole 11 highlighted in pink, bottom cap seat 18 highlighted in purple, and a yellow rectangle identifying the structure Petitioner asserts is the bottom cap seat through hole.

(4) "a first connecting rod is hinged with a connection piece of said bottom cap seat."

Petitioner asserts that Seo discloses this limitation. RMTA Opp. 9–10. In particular, Petitioner argues that Seo discloses a collapsible canopy having a central locking mechanism that "includes a center top cap (upper central hub 330) and center bottom cap (lower central hub 340 and fixing bracket 350)." *Id.* at 9 (citing Ex. 1204, Abstract, Figs. 1, 3, 6, 7, ¶ 37; Ex. 1202 ¶ 25). Petitioner also argues that center top and bottom caps are connected to inner retractable units, including connecting rods connected to the center bottom cap. *Id.* at 9–10 (citing Ex. 1204 ¶ 37, Fig. 7). Petitioner provides an annotated version of Seo's Figure 5, reproduced below, to illustrate its assertions.

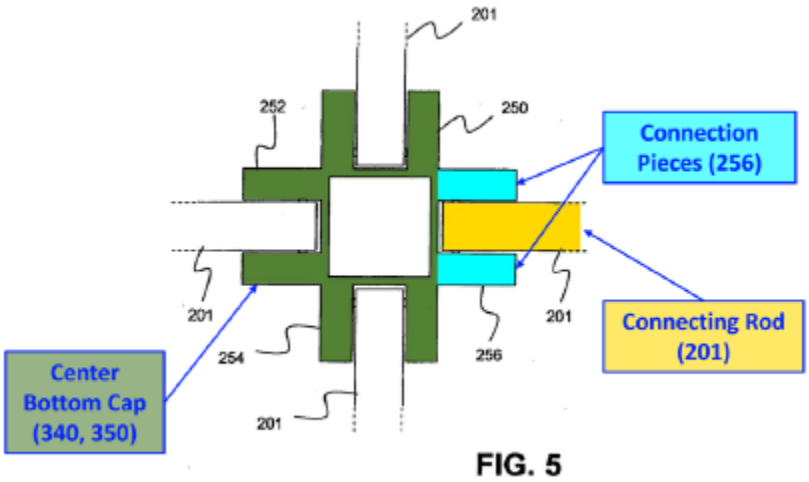

Id. at 10 (citing Ex. 1202 ¶ 25). This annotated version of Figure 5 depicts Seo's locking mechanism with center bottom cap 340, 350 highlighted in green, connecting rod 201 highlighted in yellow, and connection pieces 256 highlighted in light blue.

Petitioner contends that one of ordinary skill in the art "would have been motivated to include Seo's connecting pieces in Rousselle's center bottom cap to connect to Rousselle's connecting rods, and to position the

connection point as disclosed in Seo, for several reasons." *Id.* at 11 (citing Ex. 1202 ¶¶ 27–32). For instance, Petitioner contends that one of ordinary skill in the art would have recognized that Seo's hinges and connecting pieces "provide a sturdy, durable, easy-to-manufacture and easy-to-maintain connection with the connecting rods." *Id.* (citing Ex. 1202 ¶ 28). Petitioner also contends that the proposed modification is the simple addition of one known element to another known element to obtain predictable results and uses a known technique to improve a similar device and yield predictable results. *Id.* at 12–13 (citing Ex. 1202 ¶¶ 30–32; *KSR*, 550 U.S. at 417).

(5) "said collapsible canopy frame is moved to said unfolded state by pushing said center bottom cap upwards to drive said plurality of inner retractable units outwardly, which causes said plurality of outer retractable units and said at least three supporting legs to extend outwards, until said center bottom cap is connected with said center top cap."

Petitioner contends that Rousselle discloses this limitation. RMTA Opp. 13 (citing Ex. 1102 ¶¶ 57–59). Specifically, Petitioner contends that

> [b]ecause Rousselle discloses that bringing the upper and lower clevises (e.g., the center top and bottom caps) together results in the center tubes 500 (e.g., part of the inner retractable units) extending outward, a [person of ordinary skill in the art] would have understood that the result of Rousselle's disclosure of pushing the bottom cap upwards toward the top cap would be that the inner units extend outwardly, causing the outer retractable units (from the combination with Tsai) and the supporting legs to extend outwardly.

Id. at 13–14 (citing Ex. 1003, 13:5–29; Ex. 1102 ¶ 58). Petitioner also contends that one of ordinary skill in the art "would have understood that if Rousselle's center lock were combined with Tsai's canopy . . ., pushing Rousselle's center bottom cap upwards would cause Tsai's canopy to unfold in the same way." *Id.* at 14 n.7 (citing Ex. 1102 ¶ 58).

b) Patent Owner's Arguments

(1) Petitioner's Modification

In its Reply, Patent Owner first argues that "Petitioner has not proffered or even identified a complete combination or modified device," and "do[es] not discuss Rousselle in view of Tsai or Tsai in view of Rousselle." RMTA Reply 2. We do not agree. Petitioner addresses each of the additional limitations of proposed substitute claim 15 and explains how the relied-on prior art of record meets those limitations. RMTA Opp. 1–15; Ex. 1102 ¶¶ 40–60; Ex. 1202 ¶¶ 7–34. As for the limitations of proposed substitute claim 15 common with the limitations of original claim 1, Petitioner explains that the Petition and Reply show how each of those limitations are disclosed by Rousselle and Tsai, and the Opposition only addresses the new limitations. *Id.* at 1.

Patent Owner also argues that "Petitioner merely proposes modifying Rousselle with Ohnishi as well as with the additional references to Hoober and Seo, without any discussion of Tsai at all." RMTA Reply 2. But, as Petitioner explains, Tsai is not relevant to any of the additional limitations of revised substitute claim 15. RMTA Sur-reply 3 n.3.

For these reasons, we do not find these arguments by Patent Owner persuasive.

(2) Analogous Art

The scope and content of the relevant prior art that we are required to ascertain for obviousness is limited to references that are "analogous" to the claimed invention. *In re Bigio*, 381 F.3d 1320, 1325 (Fed. Cir. 2004); *In re Clay*, 966 F.2d 656, 658 (Fed. Cir. 1992). "Two separate tests define the scope of analogous art: (1) whether the art is from the same field of endeavor, regardless of the problem addressed and, (2) if the reference is not

within the field of the inventor's endeavor, whether the reference still is reasonably pertinent to the particular problem with which the inventor is involved." *Bigio*, 381 F.3d at 1325 (citing *In re Deminski*, 796 F.2d 436, 442 (Fed. Cir. 1986)). "The Supreme Court[ ] . . . directs us to construe the scope of analogous art broadly," in keeping with its admonition that "familiar items may have obvious uses beyond their primary purposes, and a person of ordinary skill often will be able to fit the teachings of multiple patents together like pieces of a puzzle." *Wyers v. Master Lock Co.*, 616 F.3d 1231, 1238 (Fed. Cir. 2010) (quoting *KSR*, 550 U.S. at 402 (emphasis omitted)).

Patent Owner argues that Hoober is not analogous art. RMTA Reply 2–5. According to Patent Owner, "Hoober is directed to the field of jewelry clasps and is therefore not from the same field." *Id.* at 3 (citing Ex. 2021 ¶¶ 24, 26–28). Patent Owner also contends that "Hoober is not reasonably pertinent to the problem faced by the inventor." *Id.* at 4 (citing Ex. 2021 ¶¶ 25–28). Patent Owner characterizes the problem addressed by the inventors of the '738 patent by quoting the following sentence from the '738 patent: "What is needed is **collapsible canopy frame** with a better locking mechanism." *Id.* at 4 (quoting Ex. 1001, 1:46–47; citing Ex. 2015, 2:4–6).

Petitioner disagrees and argues that "Hoober is analogous art because it relates to the same type of locking mechanism discussed in the '738 patent" and "is also reasonably pertinent to a particular problem addressed by the '738 patent (the need for easy-to-use, reliable locking mechanisms), is in the same field of endeavor (locking mechanisms), and uses similar technology (e.g., locking onto a grooved central pole)." RMTA Opp. 5 n.4;

see also RMTA Sur-reply 3–6. We agree with Petitioner and determine that Hoober is analogous art to the ’738 patent for the following reasons.

A patent’s field of endeavor may be determined “by reference to explanations of the invention’s subject matter in the patent application, including the embodiments, function, and structure of the claimed invention.” *Netflix, Inc. v. DivX, LLC*, 80 F.4th 1352, 1359 (Fed. Cir. 2023). The ’738 patent is titled “Collapsible Canopy Frame Having a Central Lock.” Ex. 1001, code (54). The Background section states that “[c]ollapsible canopies that are capable of being locked into an unfolded position are very popular in modern society.” Ex. 1001, 1:13–14. After describing perceived shortcomings of conventional canopy locking mechanisms, the Background section concludes by stating that “[w]hat is needed is a collapsible canopy frame with a better locking mechanism.” *Id.* at 1:46–47. The ’738 patent states that “[t]he present invention provides a collapsible canopy frame with an improved locking mechanism” (*id.* at 1:51–52) and “[t]he present invention provides a central lock and a canopy mounted with the central lock” (*id.* at 3:31–32).

Figure 1 of the ’738 patent “illustrates an exploded view of a central lock of the present invention.” *Id.* at 1:66–67. Figure 2 “illustrates a structural schematic view of a central lock in a locked state.” *Id.* at 2:1–2. In fact, a majority of the ’738 patent’s drawings are devoted to illustrating various aspects of the central lock. *Id.* at Figs. 1–13, 17, 22–26. Claim 1 of the ’738 patent is directed to “[a] collapsible canopy frame, comprising . . . a central lock,” and most of the dependent claims recite additional aspects of the central lock. *Id.* at 2:1–2.

Despite the ’738 patent’s focus on the central lock in the specification, drawings, and claims, we are not persuaded that the field of endeavor is so

broad as to encompass locking mechanisms in general. Rather, given that the ’738 patent is directed to collapsible canopy frames, we determine that the field of endeavor should encompass at least locking mechanisms for collapsible structures, if not collapsible canopies having locking mechanisms. Hoober, which “relates to jewelry clasps, and more particularly to locking jewelry clasps for use in securing necklaces, bracelets, watchbands and the like” (Ex. 1203, 1:19–21), is not from the same field of endeavor.

The ’738 patent’s focus on the central lock, however, indicates that providing a suitable locking mechanism was a problem with which the inventors of the ’738 patent were involved. Indeed, the ’738 patent states that “[t]he present invention provides a collapsible canopy frame *with an improved locking mechanism*.” Ex. 1001, 1:51–52 (emphasis added). This statement shows that the inventors were concerned with developing locking mechanisms. Accordingly, we agree with Petitioner that one problem that the inventors of the ’738 patent were involved with was “the problem of an easy-to-use, reliable locking mechanism.” *See* RMTA Sur-reply 5. Because Hoober describes a locking mechanism (i.e., a jewelry clasp), we find that Hoober is reasonably pertinent to the problem addressed by the ’738 patent and, thus, is analogous art. *See In re ICON Health and Fitness, Inc.*, 496 F.3d 1374, 1379–80 (Fed. Cir. 2007) (In order for a reference to be “reasonably pertinent” to the problem, it must “logically . . . have commended itself to an inventor’s attention in considering his problem.”).

For these reasons, we do not find Patent Owner’s non-analogous art argument persuasive.

(3) Motivation to Combine

Patent Owner argues that "[e]ven assuming Hoober is analogous, given that Hoober is directed to a jewelry clasp and not a collapsible canopy structure, one of skill in the art would not have any reason to expect this structure would be beneficial for a canopy." RMTA Reply 5–6 (citing Ex. 2021 ¶¶ 30–32). Despite prefacing the argument by "assuming Hoober is analogous," however, the assertion that "Hoober is directed to a jewelry clasp and not a collapsible canopy structure" seems like a re-phrasing of the non-analogous argument that we find unpersuasive for the reasons discussed above. Furthermore, we do not agree that a person of ordinary skill in the art would be so rigid as to discount Hoober's teachings. *See KSR*, 550 at 421 ("A person of ordinary skill is also a person of ordinary creativity, not an automaton."). Rather, we agree with Petitioner's assertion that Hoober's jewelry clasp is a type of locking mechanism and one of ordinary skill in the art would have understood that features of the locking mechanism could be useful in other locking mechanisms, including locking mechanisms in canopies. RMTA Sur-reply 6–7 (citing RMTA Opp. 3–8; Ex. 1202 ¶¶ 8–19). We credit Dr. Stein's testimony that Hoober's locking mechanism is very similar to the locking mechanisms of Rousselle and Ohnishi. *See* Ex. 1202 ¶ 12.

Patent Owner further argues that "Hoober's structure would not be incorporated into the proposed modified structure of Rousselle/Tsai and Ohnishi." RMTA Reply 6. Patent Owner contends that "both Rousselle and Ohnishi use an internal spring," whereas "Hoober uses an **external** flat spring 28 as part of the 'positive locking action which is an essential feature of [Hoober's] invention.'" *Id.* (citing Ex. 1203, 3:46–50) (alteration in original). According to Patent Owner, "Hoober thus uses an entirely

different positive locking action and the incorporation would require a reworking of the Rousselle/Tsai/Ohnishi device to include the external spring feature and/or a reworking of Hoober to incorporate the Rousselle/Tsai/Ohnishi device." *Id.* (citing Ex. 2021 ¶ 33).

Petitioner disagrees, arguing that it proposes incorporating Hoober's teaching of situating the locking piece between a bottom cap seat and a removable bottom cap cover, but does not propose using Hoober's spring or locking piece. RMTA Sur-reply 7 (citing RMTA Opp. 6–7). Petitioner also asserts that "[t]he test for obviousness is not whether the features of a secondary reference may be bodily incorporated into the structure of the primary reference." *Id.* (quoting *Allied Erecting & Dismantling Co. v. Genesis Attachments, LLC*, 825 F.3d 1373, 1381 (Fed. Cir. 2016)).

We agree with Petitioner that the Opposition does not propose incorporating Hoober's spring or locking piece into the locking mechanism of the Rousselle/Tsai/Ohnishi combination. *See* RMTA Opp. 6–7. Therefore, we disagree that Hoober's external spring design would have caused one of ordinary skill in the art not to consider Hoober's disclosure of a separate bottom cap seat and bottom cap cover for modifying the Rousselle/Tsai/Ohnishi combination.

For the above reasons, we do not find these arguments by Patent Owner persuasive.

(4) Tsai Disparages Seo

According to Patent Owner, "Tsai expressly disparages prior art references that use a center strut," and "Seo is exactly such a reference." RMTA Reply 7 (citing PO Resp. 30–32, 36, 42, 47; Ex. 2021 ¶¶ 35–36). Specifically, comparing Figure 17 of Tsai to Figures 1 and 6 of Seo, Patent Owner argues that both references include a center strut extending upward

from the inner units. *Id.* (citing Ex. 1005, Fig. 17: Ex. 1204, Figs. 1, 6; Ex. 2021 ¶ 38). According to Patent Owner, "one having skill in the art using Tsai (either as in the primary modification or as a starting point as in the alternative modification) would be expressly taught not to use the structure of Seo." *Id.* at 8 (citing Ex. 2021 ¶ 39).

In reply, Petitioner argues it "has not relied on Seo to teach a central strut, or indeed for Seo's canopy structure in general." RMTA Sur-reply 9. Instead, Petitioner argues it "relied on Seo's teachings of how and where to connect inner retractable units to a central locking structure." *Id.* (citing RMTA Opp. 9–13, 22–25). Accordingly, Petitioner argues that because Seo's central strut is irrelevant to the teachings relied on by Petitioner, one of ordinary skill in the art would not have been dissuaded by any alleged disparagement of center strut arrangements in Tsai. *Id.* (citing RMTA Opp. 11–13; Ex. 1202 ¶¶ 27–32; Ex. 1301, 30:1–7).

We agree with Petitioner that the Opposition does not propose incorporating a center strut from Seo into the configuration of the Rousselle/Tsai/Ohnishi/Hoober combination. *See* RMTA Opp. 11–13. Therefore, to the extent Tsai disparages center strut arrangements, we disagree that one of ordinary skill in the art would have been discouraged from incorporating the hinged connections taught by Seo into the Rousselle/Tsai/Ohnishi/Hoober combination.

For the above reasons, we do not find this argument by Patent Owner persuasive.

(5) Seo Teaches Away from Center Activation

Patent Owner contends that "Seo expressly teaches away from center driven unfolding and would not be used to arrive at the claimed embodiments" because "Seo is clear that pushing the center pole is

independent from, and not connected to, the unfolding." RMTA Reply 8 (citing Ex. 1204 ¶¶ 46–48; Ex. 2021 ¶¶ 40–41). Patent Owner also argues that, like Tsai, Seo teaches using leg locks 127 to allow or prohibit unfolding of the legs. *Id.* at 9 (citing Ex. 1204 ¶ 30).

Petitioner replies that it does not rely on Seo for those teachings. RMTA Sur-reply 9. Petitioner also argues that "'merely express[ing] a general preference for an alternative invention' is not teaching away." *Id.* (citing *DePuy Spine*, 567 F.3d at 1327; citing *UCB*, 65 F.4th at 692–93) (alteration in original). According to Petitioner, "[m]erely because Seo teaches one method of unfolding (e.g., at the legs) or locking (e.g., using leg locks) does not constitute teaching away from other methods like those taught by Rousselle," and "differences between other features of Seo [would not] dissuade a [person of ordinary skill in the art] from looking to Seo for features relevant to the combination presented by Petitioner." *Id.* at 10.

We agree with Petitioner that Seo's disclosure of pulling the poles or legs apart to unfold the structure does not disparage central activation to the extent of discouraging one of ordinary skill in the art from investigating or considering Rousselle's central lock in connection with Tsai's shelter frame, or from investigating or considering Seo's teachings regarding connecting inner retractable units to a central locking structure. *See DePuy Spine*, 567 F.3d at 1327. Although Seo discloses pulling the support poles apart to fully open the scissor assemblies (Ex. 1204 ¶¶ 48–49), this disclosure "merely expresses a general preference" and Patent Owner does not point us to any disclosure in Seo that criticizes, discredits, or otherwise discourages other unfolding techniques. Accordingly, we disagree that Seo's general preference for this technique teaches away from any other unfolding method, or otherwise suggests that one of ordinary skill in the art would not

incorporate Seo's teachings regarding connecting inner retractable units to a central locking structure.

For the above reasons, we do not find this argument by Patent Owner persuasive.

(6) Seo Teaches a Single Piece

Patent Owner argues that "even if one of skill in the art were to attempt to incorporate Seo into the heavily modified device of Rousselle, Tsai, Ohnishi, and Hoober, the resulting structure would be a single piece and would not locate the connection piece on the bottom cap seat." RMTA Reply 9 (citing Ex. 2021 ¶ 43). Patent Owner contends that Seo teaches that its lower central hub 340 and fixing bracket 350 form a single integrated piece. *Id.* (citing Ex. 1204 ¶ 42; Ex. 2021 ¶ 44).

We disagree. First, Seo discloses that fixing bracket 350 "*may be* formed as a single integrated piece with lower central hub 340." Ex. 1204 ¶ 42 (emphasis added). Thus, contrary to Patent Owner's contention, Seo does not require that lower central hub 340 and fixing bracket 350 form a single integrated piece; lower central hub 340 and fixing bracket 350 could be separate connected pieces. Accordingly, we are not persuaded that the combination proposed by Petitioner would necessarily result in a single component design.

Moreover, we agree with Petitioner's argument that it does "not rely on Seo to teach a two-piece bottom cap; Hoober provides that teaching and a [person of ordinary skill in the art] would have been motivated to use that teaching for the reasons Dr. Stein discussed." RMTA Sur-reply 10 (citing RMTA Opp. 3–8; Ex. 1202 ¶¶ 15–18). Seo's disclosure of a single piece design does not teach away from Hoober's two-piece design. *See id.* (citing *DePuy*, 567 F.3d at 1327).

Patent Owner also argues that "Rousselle specifically locates the connection with the alleged connecting rods on what would correspond to the bottom cap cover, namely, lower clevis 600." RMTA Reply 10 (citing Ex. 1003, Figs. 1(D), 2(A); Ex. 2021 ¶ 45). According to Patent Owner, one of ordinary skill in the art would thus "either replace Rousselle's bottom cap with Seo's lower central hub, retaining the single piece design, or would attach Seo's connecting members on Rousselle's bottom cap, again retaining the single piece design." *Id.* (citing Ex. 2021 ¶ 46).

Patent Owner, however, does not explain adequately why Rousselle's disclosure would have caused one of ordinary skill in the art to retain a single piece design. We agree with Petitioner that this argument ignores Hoober's disclosure. *See* RMTA Sur-reply 10 (citing Ex. 1301, 35:10–15). This argument focuses too much on Rousselle alone and does not address the proposed combination sufficiently. *See Keller*, 642 F.2d at 426.

For the above reasons, we do not find Patent Owner arguments persuasive.

(7) Hoober and Seo Would Not Be Used with Unfolding Driven by a Central Lock

Patent Owner contends that Hoober and Seo fail to overcome the alleged deficiencies of the Petition's proposed combinations with respect to this unfolding limitation identified by Patent Owner in the Revised Motion to Amend. RMTA Reply 11 (citing RMTA 19–21).

Specifically, Patent Owner argues that "Hoober is a jewelry clasp, does not perform any folding/unfolding, and would not be capable of driving any retractable units during an unfolding process." RMTA Reply 11 (citing Ex. 2021 ¶ 49). But Petitioner does not rely on Hoober for "folding/unfolding" or "driving any retractable units during an unfolding

process." Rather, Hoober is relied on for its teachings of locking mechanisms, as discussed above. *See* RMTA Opp. 5–8. Patent Owner's argument attacks Hoober individually and does not address the proposed combination. *See Keller*, 642 F.2d at 426.

Patent Owner also argues that "Seo teaches activation at the legs and not any unfolding driven through the center." RMTA Reply 11 (citing Ex. 2021 ¶ 50). Again, Patent Owner's argument attacks Seo individually and does not address the proposed combination. Petitioner does not rely on Seo for "unfolding driven through the center." *See* RMTA Opp. 9–13. Rather, Petitioner relies on Seo as disclosing "a first connecting rod hinged with a connection piece of the bottom cap." *Id.* at 10 (citing Ex. 1202 ¶ 25).

For the above reasons, we do not find these arguments by Patent Owner persuasive.

c) Conclusion as to Substitute Claim 15

Having reviewed the entire record, we find persuasive Petitioner's arguments with respect to substitute claim 15.

For the above reasons, we determine that Petitioner has shown by a preponderance of the evidence that substitute independent claim 15 would be unpatentable over Rousselle, Tsai, Ohnishi, Hoober, and Seo. We deny Patent Owner's Revised Motion to Amend as to substitute claim 15.

4. Substitute Claims 16–19

Substitute claims 16–19 depend directly or indirectly claim 15. RMTA 28–30. Petitioner asserts that the subject matter of claims 16–19 would have been obvious over the combined teachings of Rousselle, Tsai, Ohnishi, Hoober, and Seo and provides a detailed analysis of each of these claims with argument and evidence in support thereof. RMTA Opp. 16–25. We adopt Petitioner's arguments and cited evidence as to these claims and

limitations as our own determination and basis. Patent Owner does not raise any arguments specifically directed to claims 16 and 17 aside from the arguments Patent Owner directs to claim 15, which we have addressed above. RMTA Reply 11–12. Patent Owner does not address claims 18 and 19 at all. *See generally* RMTA Reply. We determine that Petitioner has shown by a preponderance of the evidence that the combination of Rousselle, Tsai, Ohnishi, Hoober, and Seo would have rendered obvious claims 16–19.

Accordingly, we deny Patent Owner's Revised Motion to Amend as to substitute claims 16–19.

IV. CONCLUSION[8]

In summary:

Claims	35 U.S.C. §	Reference(s)/Basis	Claims Shown Unpatentable	Claims Not Shown Unpatentable
1, 2, 4, 14	103	Rousselle, Tsai	1, 2, 4, 14	
4, 13, 14	103	Rousselle, Tsai, Ohnishi	4, 13, 14	
Overall Outcome			1, 2, 4, 13, 14	

Additionally, we reach the following conclusions regarding Patent Owner's Revised Motion to Amend:

[8] Should Patent Owner wish to pursue amendment of the challenged claims in a reissue or reexamination proceeding subsequent to the issuance of this decision, we draw Patent Owner's attention to the April 2019 *Notice Regarding Options for Amendments by Patent Owner Through Reissue or Reexamination During a Pending AIA Trial Proceeding. See* 84 Fed. Reg. 16,654 (Apr. 22, 2019). If Patent Owner chooses to file a reissue application or a request for reexamination of the challenged patent, we remind Patent Owner of its continuing obligation to notify the Board of any such related matters in updated mandatory notices. *See* 37 C.F.R. § 42.8(a)(3), (b)(2).

Motion to Amend Outcome	Claim(s)
Original Claims Canceled by the Amendment	1, 2, 4, 13, 14
Substitute Claims Proposed in the Amendment	15–19
Substitute Claims: Motion to Amend Granted	
Substitute Claims: Motion to Amend Denied	15–19
Substitute Claims: Not Reached	

V. ORDER

In consideration of the foregoing, it is hereby:

ORDERED that claims 1, 2, 4, 13, and 14 of the ’738 patent are determined to be unpatentable;

FURTHER ORDERED that Patent Owner’s Revised Motion to Amend is denied; and

FURTHER ORDERED that, because this is a Final Written Decision, parties to the proceeding seeking judicial review of the decision must comply with the notice and service requirements of 37 C.F.R. § 90.2.

FOR PETITIONER:

Marko Zoretic
Nathan Reeves
KNOBBE, MARTENS, OLSON, & BEAR, LLP
marko.zoretic@knobbe.com
2ndr@knobbe.com

FOR PATENT OWNER:

Jeffrey Johnson
Jason Murphy
Jared DuJack
SCHMEISER, OLSEN & WATTS LLP
jjohnson@iplawusa.com
jmurphy@iplawusa.com
jdujack@iplawusa.com