IN THE UNITED STATES DISTRICT COURT
FOR THE EASTERN DISTRICT OF TEXAS
MARSHALL DIVISION

KONINKLIJKE KPN N.V., Plaintiff, vs. TELEFONAKTIEBOLAGET LM ERICSSON and ERICSSON INC., Defendants.	Case No. 2:21-cv-113-JRG JURY TRIAL DEMANDED ~~**FILED UNDER SEAL**~~

MOTION FOR JUDGMENT AS A MATTER OF LAW PURSUANT TO RULE 50(B)

TABLE OF CONTENTS

I. INTRODUCTION 1

A. Noninfringement 1

B. Invalidity 1

C. Willfulness 1

D. Damages 1

II. BACKGROUND 1

III. ERICSSON IS ENTITLED TO JUDGMENT AS A MATTER OF LAW OF NONINFRINGEMENT 2

A. KPN did not present legally sufficient evidence of infringement of any asserted claim of the '089 Patent. 3

B. KPN did not present legally sufficient evidence of infringement of Claim 26 of the '637 Patent. 21

C. KPN did not present legally sufficient evidence that Ericsson infringed Claim 11 of the '235 Patent. 29

IV. ERICSSON IS ENTITLED TO JUDGMENT OF INVALIDITY OF THE '089 PATENT CLAIMS AS A MATTER OF LAW IN THE EVENT THE COURT ALLOWS KPN TO SUPPORT INFRINGEMENT BASED ON EVIDENCE THAT TWO CELLS SATISFIES THE CLAIMS' REQUIREMENT OF TWO WIRELESS ACCESS NETWORKS. 33

V. ERICSSON IS ENTITLED TO JUDGMENT AS A MATTER OF LAW BECAUSE NO REASONABLE JURY COULD HAVE FOUND WILLFUL INFRINGEMENT.. 34

A. The evidence does not establish unreasonably delay or egregious conduct by Ericsson during pre-suit negotiations. 35

B. The evidence proves that Ericsson carefully considered KPN's infringement claims, dedicated significant resources to investigating those claims, and concluded that the Asserted Patents were not infringed or not valid. 37

VI. THERE WAS NOT LEGALLY SUFFICIENT EVIDENCE TO HOLD ERICSSON LIABLE FOR $31.5 MILLION IN DAMAGES. 38

A. Legal Background 39

B. Mr. Wagner's damages model depended on a baseline royalty rate untethered from the asserted patents. 41

C. KPN did not provide legally viable evidence to support its damages claim. 43

TABLE OF AUTHORITIES

Page(s)

CASES

Apple Inc. v. Wi-LAN Inc.,
25 F.4th 960 (Fed. Cir. 2022) 48

Bayer Healthcare LLC v. Baxalta Inc.,
989 F.3d 964 (Fed. Cir. 2021).....34, 35, 37

Bio-Rad Labs., Inc. v. 10X Genomics Inc.,
967 F.3d 1353 (Fed. Cir. 2020).....40

Bradium Techs. LLC v. Iancu,
923 F.3d 1032 (Fed. Cir. 2019).....34

Centricut, LLC v. Esab Group, Inc.,
390 F.3d 1361 (Fed. Cir. 2004).....28, 33

CommScope Techs. LLC v. Dali Wireless Inc.,
10 F.4th 1289 (Fed. Cir. 2021) 10

cxLoyalty, Inc. v. Maritz Holdings Inc.,
986 F.3d 1367 (Fed. Cir. 2021).....30

Duncan Parking Techs., Inc. v. IPS Grp., Inc.,
914 F.3d 1347 (Fed. Cir. 2019).....26

Erfindergemeinschaft Uropep Gbr v. Eli Lilly & Co.,
No. 2:15-cv-1202-WCB, Dkt. 359 (E.D. Tex. May 18, 2017) 35

Ericsson, Inc. v. D-Link Sys., Inc.,
773 F.3d 1201 (Fed. Cir. 2014).....39, 40, 41

Finjan, Inc. v. Blue Coat Sys., Inc.,
879 F.3d 1299 (Fed. Cir. 2018).....39, 45

Garretson v. Clark,
111 U.S. 120 (1884).....39, 40

Grain Processing Corp. v. Am. Maize–Products Co.,
185 F.3d 1341 (Fed. Cir. 1999).....39

Halo Elecs., Inc. v. Pulse Elecs., Inc.,
136 S. Ct. 1923 (2016).....34

Homeland Housewares, LLC v. Whirlpool Corp.,
865 F.3d 1372 (Fed. Cir. 2017).....19

Integra Lifesciences I, Ltd. v. Merck KGaA,
496 F.3d 1334 (Fed. Cir. 2007).....31, 33

Intell. Ventures I LLC v. Motorola Mobility LLC,
870 F.3d 1320 (Fed. Cir. 2017).....22

INVT SPE LLC v. Int'l Trade Comm'n,
46 F.4th 1361 (Fed. Cir. 2022) 3, 4, 9, 10

LaserDynamics, Inc. v. Quanta Comput., Inc.,
694 F.3d 51 (Fed. Cir. 2012).....39, 40

Lucent Techs., Inc. v. Gateway, Inc.,
580 F.3d 1301 (Fed. Cir. 2009).....46, 47

Oiness v. Walgreen Co.,
88 F.3d 1025 (Fed. Cir. 1996).....39

OPTi Inc. v. Apple, Inc.,
No. 2:07-cv-21-CE, 2009 WL 4727912 (E.D. Tex. Dec. 3, 2009).....35

Pannu v. Iolab Corp.,
155 F.3d 1344 (Fed. Cir. 1998).....2

ResQNet.com, Inc. v. Lansa, Inc.,
594 F.3d 860 (Fed. Cir. 2010).....41, 45

SRI Int'l, Inc. v. Cisco Sys., Inc.,
14 F.4th 1323 (Fed. Cir. 2021) 34

Uniloc USA, Inc. v. Microsoft Corp.,
632 F.3d 1292 (Fed. Cir. 2011).....41

VirnetX, Inc. v. Cisco Sys., Inc.,
767 F.3d 1308 (Fed. Cir. 2014).....39

WBIP, LLC v. Kohler Co.,
829 F.3d 1317 (Fed. Cir. 2016).....34

OTHER AUTHORITIES

Fed. R. Civ. P. 50(b)(2).....39

I. INTRODUCTION

A. Noninfringement

KPN failed to present legally sufficient evidence of infringement for any of the asserted claims of the ’089, ’637, and ’235 Patents, and the trial record demonstrates that Defendants do not infringe those claims. Thus, judgment of noninfringement as a matter of law is warranted.

B. Invalidity

KPN offered no evidence to rebut Ericsson’s showing that each of the asserted claims of the ’089 Patent is anticipated by the prior art and therefore invalid. Thus, judgment of invalidity as a matter of law is warranted.

C. Willfulness

KPN failed to present legally sufficient evidence of willful infringement for any of the asserted claims of the ’089, ’637, and ’235 Patents. Thus, judgment of no willful infringement as a matter of law is warranted.

D. Damages

KPN failed to present legally sufficient evidence supporting the damages amount awarded. Thus, judgment of no damages as a matter of law is warranted.

II. BACKGROUND

In its complaint and during discovery, KPN asserted that Ericsson directly and indirectly, based on its customers’ activities, infringed claims of three patents: U.S. Patent No. RE48,089 (“the ’089 Patent”); U.S. Patent No. 8,881,235 (“the ’235 Patent”); and U.S. Patent No. 9,253,637 (“the ’637 Patent”). However, at trial KPN dropped its allegations against customer activities and narrowed its case to direct infringement by Ericsson’s sale of products, Ex. A, 8/23/22 Trial Tr. (Wagner Direct) at 207:4-10, under one or more of Claims 3, 4, 5, and 13 of the ’089 Patent, Claim 11 of the ’235 Patent and Claim 26 of the ’637 Patent. *See* Dkt. 262 at 1

(Final Judgment).

During trial, KPN presented expert testimony from Dr. William Mangione-Smith on infringement. Ex. A, 8/23/22 Trial Tr. (Mangione-Smith Direct) at 7:18-8:2. Ericsson contested infringement of all asserted claims, presented expert testimony from Dr. Stephen Wicker and Prof. Kevin Jeffay on noninfringement, and also called Ericsson engineers Mr. Jacobus du Plooy and Mr. Jeffrey Diamond. Ericsson also asserted invalidity due to anticipation of the asserted claims of the ’089 Patent and presented corresponding expert testimony from Dr. Stephen Wicker.

Ericsson moved for judgment as a matter of law of noninfringement, invalidity, willfulness, and damages at the close of all evidence, pursuant to the Court’s practice. Ex. C, 8/25/22 Trial Tr., at 105:22-106:5. The Court denied the motion and submitted those issues to the jury. *Id.* at 126:18-127:9. The jury returned a verdict on which the Court entered final judgment that Ericsson infringed one or more of the asserted claims, that such infringement was willful; that none of the asserted claims of the ’089 Patent were invalid; and that KPN should recover from Ericsson $31,518,974 for such infringement through the date of trial. Dkt. 262 at 1.

III. ERICSSON IS ENTITLED TO JUDGMENT AS A MATTER OF LAW OF NONINFRINGEMENT.

A court may grant a renewed motion for JMOL after a jury trial if the moving party shows that “the jury’s findings, presumed or express, are not supported by substantial evidence or, if they were, that the legal conclusions implied [by] the jury’s verdict cannot in law be supported by those findings.” *Pannu v. Iolab Corp.*, 155 F.3d 1344, 1348 (Fed. Cir. 1998) (internal quotation marks omitted). KPN failed to present substantial evidence of infringement for any of the asserted claims of the ’089, ’235, and ’637 Patents. Accordingly, judgment as a matter of law of noninfringement for all asserted claims is warranted.

A. KPN did not present legally sufficient evidence of infringement of any asserted claim of the ’089 Patent.

KPN failed to present legally sufficient evidence that Ericsson directly infringes any of asserted Claims 3, 4, 5, and 13 of the ’089 Patent.

i. KPN did not present legally sufficient evidence that the Ericsson accused products are “configured to” perform the claim limitations.

Asserted Claim 1 of the ’089 Patent requires an information collector that is “configured to” (i) select one or more terminals; (ii) instruct the selected one or more terminals to measure signals from the second wireless access network; (iii) obtain measurement information; and (iv) provide the measurement information to the coverage estimator.[1] DX 5, Claim 1. And all asserted claims additionally require a coverage estimator “configured to” generate a coverage estimate based on “measurement information” that is obtained as a result of “instruct[ing] the selected one or more terminals to measure signals from the second wireless access network.”

The parties agreed, and the Court accepted the parties’ agreement, that “configured to” has its plain meaning, which *requires more than mere capability* to perform the recited functions. Dkt. 80 at 8 (Claim Construction Memorandum and Order). The Federal Circuit recently clarified in a decision—issued after the jury returned its verdict—that an accused device has the “capability” of performing the recited functions if it is “able to perform those functions when it is activated and put into operation.” *INVT SPE LLC v. Int’l Trade Comm’n*, 46 F.4th 1361, 1375 (Fed. Cir. 2022). Even “capability” cannot be established “without any evidence or undisputed knowledge of an instance that the accused product performs the claimed function when put in operation.” *Id.* at 1376. And as the Court’s construction in this case confirms, “configured to”

[1] Similarly, Asserted Claim 13 requires (i) “means for selecting one or more terminals”; (ii) “means for instructing the selected one or more terminals to measure signals from the second wireless access network”; (iii) “means for obtaining measurement information”; and (iv) “means for providing the measurement information to a coverage estimator.”

requires more than mere capability.

After summary judgment, but before trial, KPN abandoned its indirect infringement claim against Ericsson.[2] *See* Ex C, 8/25/22 Trial Tr. at 110:18-111:16. At trial, KPN's sole infringement theory with respect to the '089 Patent was that Ericsson infringed by selling its equipment to customers in the United States.[3] KPN merely argued that those products, when sold, "have all the software and all the hardware that they need to do what's in the claim." Ex. A, 8/23/22 Trial Tr. (Mangione-Smith Direct) at 27:8-12; *see also* Ex. B, 8/24/22 Trial Tr. (du Plooy Re-Cross) at 108:16-20 ("Q. Mr. du Plooy, do you understand that the parties have a dispute in this case about our position, which is that Ericsson's product is infringing when it's sold because it's configured to do MDT? You understand that's our position. Right?").[4] Under *INVT*, however, KPN's argument falls short of the requirements to even prove capability, let alone configuration. *INVT* explained that an "accused device cannot meet the required *capabilities* of the [asserted patent] claims without evidence or agreement that *the accused*

---

[2] During trial, KPN asked an Ericsson witness questions related to indirect infringement, which are irrelevant considering KPN's only claim in the case—that Ericsson infringes by merely selling the accused devices. Actions taken by Ericsson's customers (*e.g.*, AT&T) *after* they buy Ericsson's equipment, such as implementation of their privacy policies, cannot provide legally sufficient evidence to prove that Ericsson directly infringes the '089 Patent. *See* Ex. B, 8/24/22 Trial Tr. (du Plooy Re-Cross), at 108:16-109:25.

[3] KPN offered no evidence at trial that Ericsson used the accused products in the United States. Its sole argument was that Ericsson's sale of the accused products infringed the '089 Patent.

[4] Contrary to KPN's own theory, that the Ericsson equipment infringed *as sold*, KPN argued at trial that Ericsson's customers are tracking user location information and, therefore, must have configured the Ericsson equipment with user consents. *See* Ex. B, 8/24/22 Trial Tr. (Wicker Cross) at 313:20-317:22; Ex. D, 8/26/22 (Closing Argument) at 40:5-42:5. *First*, that argument is inconsistent with KPN abandoning its indirect infringement theory. And *second,* the argument has no support in the record evidence. Dr. Wicker never admitted that the carriers' use of user location information is related to the MDT functionality—nor does KPN ever ask this question. *See id*. Instead, when seeking a trial to test MDT on Ericsson's equipment, carriers like T-Mobile, specifically notified Ericsson that they *could not operate* the MDT feature, because they did *not* have users consents configured. DX0209; DX0210; DX0211; Ex. B, 8/24/22 Trial Tr. (Diamond direct), at 129:9-133:8.

device performs, without modification, the recited functions at least once when it is in operation." 46 F.4th at 1380 (emphases added). KPN improperly conflated "configured to" with simply "hav[ing]" the right software and hardware, which is not sufficient to prove configuration.

During trial, the evidence established that Ericsson's products, as sold, are not configured to—and in fact specifically are configured so that they *cannot* perform any of the claimed functions to—(i) select any terminals; (ii) instruct any terminals to measure; (iii) obtain any measurement information from terminals; (iv) provide any measurement information to an information collector; or (v) generate any coverage estimate from any measurement information obtained from selected terminals. Ericsson's accused equipment must be reconfigured before any of that accused activity is possible.

KPN relied almost exclusively on just one document—PX 73—to attempt to establish that Ericsson's accused products were configured to perform the recited claim functions. In particular, KPN relied on the following flow chart as alleged proof that Ericsson's products performed the recited claim functions[5]:

[5] Ex. A, 8/23/22 Trial Tr. (Mangione-Smith Direct) at 47:9-48:8 (relying on PX 73 for the function of "selecting"); 52:10-22 (relying on PX 73 for the function of "instructing"); 55:1-22 (relying on PX 73 for the function of "obtaining"); 56:3-17 (relying on PX 73 for the function of "providing"); 66:22-67:5 (relying on discussion use of "M1 reports," discussed in PX 73, for function of "generating a coverage assessment based on the measurement information provided").

[redacted]

KPN's own expert, however, conceded on cross examination that the flow chart he relied on in PX 73 merely showed signals and events that "*can* happen *if* MDT is configured and running." Ex. A, 8/23/22 Trial Tr. (Mangione-Smith Cross) at 148:20-27, 149:15-19 (emphases added).

To reconfigure the Ericsson equipment to perform as shown in PX 73, *first*, the equipment must be configured by enabling a license key *after* that base station is installed in the customer network. Ex. A, 8/23/22 Trial Tr. (Mangione-Smith Cross) at 149:20-150:14; Ex. B, 8/24/22 Trial Tr. (Wicker Direct) at 185:6-186:6. Although KPN argued that Ericsson's *customers* had enabled the MDT licensing key in *some* of the Ericsson equipment *after* that equipment had been sold and installed by the customers, the fact that this activity is necessary before any MDT functionality can operate only proves that, as sold, the Ericsson equipment is not configured to perform any claimed functions.

Second, even after a customer enables the license key on the Ericsson equipment, that equipment still is configured to prohibit any of the five required functions from occurring. As

explained below, the undisputed evidence establishes that Ericsson's accused equipment must be reconfigured to permit phones to be selected, instructions to be given, measurement information to be obtained and provided, and coverage assessments to allegedly be generated based on the provided information. This reconfiguration is possible *only* if Ericsson's customers have further configured that equipment with their end users' consents to have the MDT functionality operate with their phones; and this configuration can occur only after the equipment is sold and installed.

The experts all agreed on this issue. For example, Dr. Mangione-Smith agreed that the Ericsson equipment cannot perform the required claim functions if it has not been configured with user consents. Ex. A, 8/23/22 Trial Tr. (Mangione-Smith Cross) at 151:21-152:16. Specifically, Dr. Mangione-Smith conceded that, if Ericsson's customers have not configured the Ericsson equipment to store end user consents to use the MDT feature, the Ericsson equipment cannot ever select a phone for MDT. *Id.* at 153:19-154:7, 155:5-10. Dr. Mangione-Smith further conceded that the Ericsson equipment is configured such that, if no user consent has been obtained, the equipment cannot instruct phones to take measurements, to obtain measurements, or to provide those measurements for use in generating a coverage assessment. *Id.* at 155:19-156:12.

Ericsson's expert, Dr. Wicker, testified consistently. First, Dr. Wicker explained the multiple levels of configuration that must occur, *after Ericsson's products are sold*, to allow any accused MDT operation to occur:

> Q. Do you understand that yesterday Mr. Ward questioned Ericsson's corporate representative and he in his question suggested that Ericsson's base stations could infringe on the day that they're sold because on that day MDT is configured.
>
> A. Yes. I understand that.
>
> Q. What's your reaction?
>
> A. That's incorrect.

> Q. Why?
>
> A. Because when it's sold, the system is not configured. In fact, it's specifically not configured to perform the measurements associated with MDT. First thing that has to happen is that there is a database called the home subscriber service. That HSS, as it's called, has to be configured with the customer consent. The next thing that happens is that the system has to be turned on in the base station. The third thing that has to happen is that the individual handsets that are going to be taking the measurements and reporting them as part of MDT, they have to be configured to take these measurements because they wouldn't otherwise be doing that. So there's several things, several configuration steps, that have to happen before MDT can actually take measurements and report them.
>
> Q. Is it possible for the MDT feature to infringe on the day it's sold, in light of that?
>
> A. No, it is not possible.

Ex. B, 8/24/22 Trial Tr. (Wicker Direct) at 163:3-164:4. Ericsson's witness Mr. du Plooy confirmed that when Ericsson sells its accused equipment, none of that configuration has been done. *Id.* (du Plooy Redirect) at 103:20-104:13.

Consistent with Dr. Mangione-Smith's admissions, Dr. Wicker explained that, without Ericsson's customers obtaining user consent and configuring the Ericsson equipment with that consent—after that equipment is sold—*none* of the accused functions ever can happen:

> Q. What does the lack of user consent have to do with whether the MDT feature meets the limitations of the claim we're looking at?
>
> A. Okay. The accused system will not take any measurements without consent. It is specifically configured not to take measurements if there's no consent given by the individual handset owners. And so without user consent, you cannot select phones, you cannot instruct phones, you cannot obtain measurements, and you cannot generate a coverage assessment from those measurements.

Id. (Wicker Direct) at 180:9-18.

Dr. Wicker went on to explain in detail that, if the base station has not been configured with end user consent, no phone can be selected. *Id.* at 187:3-8; DX 52 at 11; *see also id.* (du Plooy Redirect) at 98:7-99:7, 102:23-103:12, 104:18-21 (referring to PX 9 at 1).

Dr. Wicker also provided detail that, if the base station is not configured with end user consents, no reconfiguration can occur to instruct phones to take MDT measurements, or to obtain those measurements, or to provide those measurements to a coverage estimator, or to generate any coverage estimate based on such measurements. *Id.* (Wicker Direct) at 187:23-188:7; *see also id.* (du Plooy Redirect) at 104:23-105:15, 106:8-18 (referring to PX 9 at 1). Put simply, the Ericsson equipment, as sold, is configured to guarantee that it will *not* perform *any* of the functions that KPN relied up on to satisfy the claims of the '089 Patent. *Id.* (Wicker Direct) at 188:8-189:17.

Where the accused device must operate within an "environment" to function, that environment must be considered as part of the infringement analysis. *INVT*, 46 F.4th at 1375 ("[T]he claimed device of the '439 patent operates in an environment that involves actions of another device (the communicating party, i.e., the base station). . . . Because the communicating party (base station) generates the necessary environment, its operations must be known to determine whether the accused device infringes, i.e., is capable of performing the claimed functions."). Here, KPN failed to prove infringement because it did not provide evidence of any reconfiguration of the Ericsson accused equipment with end user consents to allow the MDT functionality to perform any of the required claim functions. Instead, the evidence established that, as sold by Ericsson, the accused Ericsson equipment is not configured with any user consent and is incapable of and prohibited from performing any of the five required claim functions. *See* Ex. A, 8/23/22 Trial Tr. (Mangione-Smith Cross) at 153:19-154:7, 155:5-10, 155:19-156:12.

In sum, KPN failed to prove infringement by Ericsson's sale of its equipment; it could not even prove that Ericsson's equipment, when sold, is *capable* of performing the required claim functions. During closing, KPN argued:

> On capable versus configured, we know we've met our burden. Someone said it: You flip a switch. And that's exactly right. This is configured to perform every element of KPN's claims. All you have to do is flip the switch

Ex. D, 8/26/22 (KPN Closing) at 43:23-44:1. But proving capability requires evidence that "the accused device performs, *without modification*, the recited functions *at least once when it is in operation*." *INVT*, 46 F.4th at 1380 (emphases added). KPN's assertion that "flip[ping] the switch" proves configuration is at odds with the requirements under *INVT*. Moreover, "flip[ping] the switch," in this case, cannot occur without the Ericsson equipment being installed and configured with user consent, which could only occur separately from and after sale.

Accordingly, the trial record does not contain legally sufficient evidence that Ericsson's equipment is configured to perform the required claim limitations under the '089 Patent.

ii. KPN failed to show the accused Ericsson products include the required coverage estimator.

At trial, KPN failed to present legally sufficient evidence of infringement of Claims 3, 4, 5, and 13 of the '089 Patent at least because KPN failed to show the accused Ericsson products include a coverage estimator configured to generate a coverage assessment as required by all asserted claims. *See CommScope Techs. LLC v. Dali Wireless Inc.*, 10 F.4th 1289, 1298 (Fed. Cir. 2021) (reversing denial of noninfringement JMOL because "[t]he burden is on a patent owner to show that 'the properly construed claim reads on the accused device exactly.' [Defendant]'s reliance on the claim terms as construed by the district court is not 'hair-splitting,' as [plaintiff] argues, but instead properly shows that [plaintiff] failed to meet its burden at the district court and that no reasonable jury could have found otherwise" (citation omitted)). Asserted Claims 3, 4, and 5 require via dependence on Claim 1 a "coverage estimator is configured to: . . . (ii) based on the obtained measurement information, generate the coverage assessment for the second wireless access network of the telecommunications infrastructure."

Claim 13 also requires a configured "coverage estimator." DX 5; Ex. B, 8/24/22 Trial Tr. (Wicker Direct) at 199:19-200:15 (explaining that the analysis for Claim 13 is similar to that for Claim 1). The Court construed the claimed "coverage estimator" as a means-plus-function term that is limited to the corresponding structure disclosed in the specification and equivalents thereof, which is "coverage estimator 8 having the features and configuration disclosed in the '089 Patent; and equivalents thereof." Dkt. 80 at 15. The parties agreed, and the Court construed, the claimed "coverage assessment" is a "representation of locations/pixels and associated signal strengths and/or interference values." *Id.* at 8.

At trial, KPN only advanced one theory: that a measurement report called an "M1" report satisfies the "measurement information" requirement and the "Ericsson Network Manager (ENM)" satisfies the coverage estimator. Ex. A, 8/23/22 Trial Tr. (Mangione-Smith Direct) at 52:23-53:25 ("When a cell phone does an MDT operation, it produces something called an M1 report. . . . Now, the M1 report contains signal strength information for the serving cell as well as many neighboring cells."), 55:1-22 (testifying that the "obtaining measurement information" limitation was satisfied by the base stations receiving M1 reports from cell phones). However, KPN failed to show that the ENM generates any coverage assessment. The sole functionality of the ENM relied on by KPN's expert was its decoding of an M1 report into a plain text format, as shown by KPN's expert testimony and exhibit demonstrative slides below.

> So what the Ericsson network manager does, getting back to your question, is it receives this file, it decodes it to get the M1 reports, it decodes all of the individual M1 reports, it puts them in something called plain text format, which means that's a file that I can -- that a human being can just look at and read. It's regular text, something written.

Id. at 64:11-16; *see also id.* at 62:17-63:22 ("[T]he individual M1 reports . . . are encoded in something called ASN.1 format. So the Ericsson network manager first needs to receive the ROP file, decode it from the GPB format, and there it gets out a bunch of M1 reports, and then decode

each one of those from the ASN.1 format to get a coverage assessment.”).

[redacted]

Ex. G (Mangione-Smith Demonstratives), at 69; *see also* Ex. A, 8/23/22 Trial Tr. (Mangione-Smith Direct) at 58:18-59:14 (pointing to statement from PX 77 that the [redacted]); PX 77.

[redacted]

PX 729 (annotation added in red showing [redacted]); *see also* Ex. A, 8/23/22 Trial Tr. (Mangione-Smith Direct) at 65:23-66:21 (relying on demonstrative as [redacted] to conclude that the M1 report contents satisfy the Court's definition of a coverage assessment).

The record evidence shows that the sole function of the ENM is to change the M1 report format of the alleged "measurement information" to another format. Creating a plain text version of an M1 report cannot legally support a finding that the ENM is a "coverage estimator" as defined by the Court's identification of corresponding structure or that it generates any "representation of locations/pixels and associated signal strengths and/or interference values." Mere plain text listing of the measurements reported by the terminal is simply the "measurement information" itself and thus cannot represent a coverage *assessment generated based on the measurement information*, nor does a plain text listing of measurements and locations meet the

agreed construction of a "*representation* of locations/*pixels* and associated signal strengths or interference values." The Court's corresponding structure of the '089 Patent does not include a coverage estimator 8 with any feature or configuration to generate a coverage assessment by decoding a file to create a plain text version of measurement information and KPN put on no evidence of equivalence between the corresponding structure for generating an assessment and a structure that merely reformats data.

Not only did KPN fail to identify evidence of the construed limitation, the objective and unrebutted evidence at trial established that Ericsson's products *do not provide any specific support tool to generate a coverage* assessment:

[redacted]

DX0161 (highlighting added). Ericsson's noninfringement expert, Dr. Stephen Wicker, explained this during trial:

> Q. (BY MR. KUBEHL) Is this a document that Doctor Mangione-Smith relied on for the allegation that Ericsson's accused network products provide maps of bad

coverage or capacity?

A. Yes, it is.

Q. And do you see where -- is this talking about MDT?

A. Yes, it is.

Q. And it says MDT can do some post-processing?

A. That's correct.

Q. And then what does it say in the next one?

A. "Could provide a map showing bad coverage or capacity."

Q. So that could, that information could be used to do that?

A. Yes, it could.

Q. But then what does Ericsson say?

A. Ericsson has no specific support tool for this.

Q. Do you believe Ericsson has a coverage estimator?

A. No.

Q. Is that an additional reason that you believe there's no infringement of the '089 Patent?

A. Yes, it is.

Ex. B, 8/24/22 Trial Tr. (Wicker Redirect) at 329:13-330:7. As seen above, the record evidence shows that Ericsson does not provide any support tool for post-processing the accused measurement information such as generating a coverage map or other assessment of coverage. *Id.*

Accordingly, the trial record does not contain substantial evidence that the accused ENM is or is equivalent to the "coverage estimator" of the '089 Patent's corresponding structure or that Ericsson's equipment performs the function of generating any "coverage assessment" as

construed by the Court.

iii. KPN failed to offer substantial evidence of the two wireless access networks required by the '089 Patent's asserted claims.

Claims 1 (from which asserted Claims 3, 4, 5 depend) and 13 of the '089 Patent require that the information collector be configured to "select one or more terminals from at least part of the plurality of terminals, the at least part of the plurality of terminals capable of communicating with *both the first wireless access network and the second wireless access network*" and "instruct the selected one or more terminals to measure *signals from the second wireless access network*." DX 5, Claim 1 (emphases added). Further, all asserted claims require generating a coverage assessment "*for the second wireless access network* of the telecommunications infrastructure." *Id*. at Claims 1 and 13. KPN's expert agreed that the claimed concept in the '089 Patent was generating a coverage assessment for one wireless access network using results of the measurements collected at one of the other wireless access networks. Ex. A, 8/23/22 Trial Tr. (Mangione-Smith Cross) at 159:12-20. KPN, however, failed to present evidence that the accused MDT feature instructs UEs to measure from a second network or otherwise relies on signals measured from a second network, or that any coverage assessment is generated for a second wireless access network.

KPN's only infringement theory was that two neighboring cells could comprise the claimed "first" and "second wireless access networks." Ex. A, 8/23/22 Trial Tr. (Mangione-Smith Direct) at 48:9-49:3 ("So since *I've identified the two neighboring cells as the first and second wireless access network*, clearly your phone can move from one to another and so it can communicate with both." (emphasis added)), 54:1-4 ("So the first wireless access network is the serving cell and the second wireless access network is a neighboring cell."). KPN's expert Dr. Mangione-Smith did not offer any evidence that a cell with a single base station is its own

network. He instead offered the irrelevant opinion that "this is how cell phones work." *Id.* at 48:20. But the record shows that KPN's infringement theory is entirely inconsistent with both the disclosure of '089 Patent and with basic cellular network principles.

First, the only depictions of first and second wireless access networks in the '089 Patent, Figures 2 and 3, establish that a wireless access network is a *collection* of base stations, not a single base station. Dr. Mangione-Smith relied on Figure 3 during direct examination. In this figure, each base station is identified by its corresponding tower.

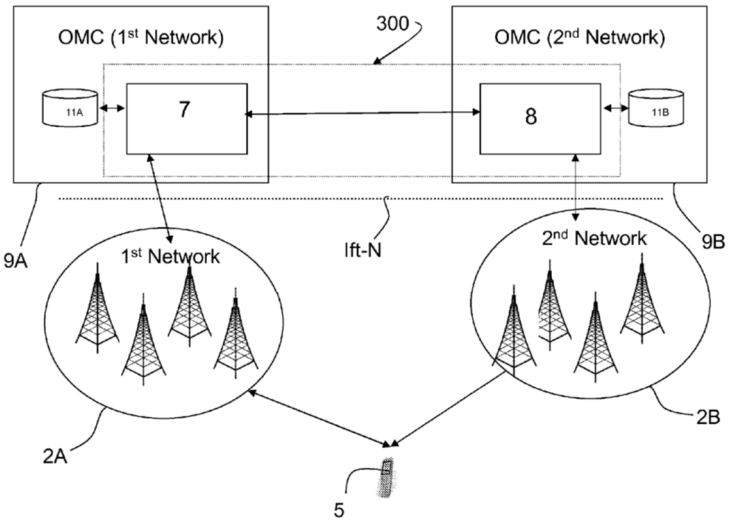

FIG. 3

Dr. Mangione-Smith confirmed that Figure 3 of the '089 Patent shows the claimed system, identifying "the first network on the left" and explaining that the figure depicts "collecting information from the first network," "measuring signals from the second network," and "sending that information back to the first network which sends it back to the information collector." Ex. A, 8/23/22 Trial Tr. (Mangione-Smith Direct) at 50:6-20. Each of the "first" and "second" wireless access networks in Figure 3 includes a combination of multiple cells (base stations).

During cross examination, Dr. Mangione-Smith also conceded that Figure 2 of the patent "is illustrating an example where there are two wireless access networks." Ex. A, 8/23/22 Trial

Tr. (Mangione-Smith Cross) at 163:3-6. He further agreed that each of the first and second wireless access networks depicted in Figure 2 is comprised of multiple adjacent cells and that the '089 Patent "would refer to that as two wireless access networks," not as a wireless access network for each cell. *Id.* at 165:8-21 ("Q. And the patent would refer to this as two wireless access networks. Right? A. Right. Q. It doesn't refer to that as one, two, three, four, five, six, seven, eight, nine wireless access networks, does it? A. No. In this example, it refers to them as two."). Dr. Mangione-Smith also confirmed Figure 2 depicts each network as being comprised of multiple base stations. *Id.* at 165:22-166:9 ("Q. The last figure of the patent, in this figure you've got a first network over here on the left that's got four base stations. Correct? A. Yes. Q. And then you've got a different second network over here that's got four different base stations. Right? A. Sure. Q. And in the first network, those base stations would form a number of cells. Correct? A: Sure, yep. Q. And the second network those base stations would form a different number of cells. Correct? A. Yes."). KPN's own expert did not contest that Figures 2 and 3 of the '089 Patent show first and second wireless access networks that are each comprised of multiple base stations/cells, and KPN did not present trial evidence that any other disclosure in the '089 Patent supports a wireless access network structure including only a single base station.

Dr. Mangione-Smith opined during redirect examination that a single base station could comprise a sub network. Ex. A, 8/23/22 Trial Tr. (Mangione-Smith Redirect) at 199:6-8 ("Q. So does a single base station count as a sub network, in your opinion? A. Yes, it absolutely does."). However, he identified no figure or description in the '089 Patent disclosing a single base station forming a "*wireless access* network" and offered no portion of the patent or any other evidence showing that, contrary to the '089 Patent's disclosure, a single base station could make up an entire "wireless access network." Dr. Mangione-Smith's conclusory opinion is insufficient where

there is no supporting evidence and the patent disclosures he acknowledges contradict him. *See Homeland Housewares, LLC v. Whirlpool Corp.*, 865 F.3d 1372, 1378 (Fed. Cir. 2017) ("[W]e must disregard the testimony of an expert that is plainly inconsistent with the record.").

Second, the uncontroverted trial evidence is that Ericsson's accused MDT feature does not instruct user equipment to measure on a second wireless access network like those disclosed in the '089 Patent, nor is there any coverage assessment generated for a second wireless access network, as required in the '089 Patent. For instance, Dr. Wicker, after reviewing documents, the testimony of deposed Ericsson engineers, and the source code, testified to the following:

> Q. Okay. So based on the fact that we've got a patent that requires two networks and making a coverage assessment of a second network, what's your assessment of this -- these products with respect to that claim?
>
> A. Okay. With regard to the claims, the asserted claims, there is no infringement. The claims call for two networks, and Ericsson's accused products only take measurements and report on a single network.
>
> Q. So with the MDT product, if user consent is obtained and it's up and running and it's doing its thing, it will only take measurements from one network?
>
> A. That's right, the one it's on.
>
> Q. And it will only do an assessment -- it will only provide information for an assessment of that same network?
>
> A. That's correct.

Ex. B, 8/24/22 Trial Tr. (Wicker Direct) at 216:7-21; *see also id.* at 217:1-13 (confirming that neither of Ericsson's LTE or NR MDT features are able to instruct phones to take measurements on a second multi-station network).

> Q. Did you do an analysis of the source code on this point?
>
> A. Yes, I did.
>
> Q. What did it show you?
>
> A. It only measured on the network to which the handset was connected.

Id. at 217:22-218:1. Dr. Wicker also explained that the M1 report, which was relied upon by Dr. Mangione-Smith in his infringement analysis, only contains reports for a single multi-station network:

> Q. What is the -- do you remember what the measurement -- the claim calls for measurement information or instructing the phones to take measurement and obtaining measurement information. Do you recall that?
>
> A. Yes.
>
> Q. What is the measurement information that Doctor Mangione-Smith relied on?
>
> A. Something called M1. It is reports of radio signal strength.
>
> Q. Does the M1 report contain reports on more than one network?
>
> A. No.

Id. at 218:2-13. The above testimony of Dr. Wicker—and the evidence he discussed—went unrebutted by KPN and Dr. Mangione-Smith. Further, Dr. Mangione-Smith himself admitted that he reviewed the deposition transcript of Jian Wang, in which she stated that the Ericsson MDT feature only measures on one network:

> Q. (BY MR. KUBEHL) There's Ms. Wang. Right?
>
> A. Yes.
>
> Q. This is from the same deposition transcript of hers at page 100, lines 11 through 22. You reviewed that transcript. Right?
>
> A. Yes, sure.
>
> Q. And you recall reading that Ms. Wang testified in response to the question, "So does Ericsson's 4G MDT feature support measuring on more than one network?" Do you recall that question being asked?
>
> A. Yes.
>
> Q. And she answered, "Ericsson MDT feature only measure in one network." Did I read that right?
>
> A. I see that, yep.

Q. And they asked the same question for the 5G MDT feature. Do you see that?

A. Yes.

Q. And she responded, "Yes. It only measure in one radio network." Correct?

A. Yes, I see that.

Ex. A, 8/23/22 Trial Tr. (Mangione-Smith Cross) at 179:14-180:8. There is no record evidence to suggest that there is a different, second wireless access network that is part of Ericsson's implementation of MDT from which Ericsson's base stations can obtain measurement information or for which a coverage estimate can be generated.

Even if KPN had shown that the accused products were configured with user consent to enable performance of the claimed "select," "instruct," "obtain," "provide," and "generate" steps—which it did not, as discussed above—the record shows that the accused MDT feature cannot operate on two wireless access networks at the same time. *See, e.g.*, *id.* at 179:11-180:8; Ex. B, 8/24/22 Trial Tr. (Wicker Direct) at 216:7-21, 217:14-218:1. Because KPN failed to present sufficient evidence that a single base station can be a wireless access network, and because the uncontroverted evidence shows that Ericsson's accused product does not instruct terminals to measure signals on a second wireless access network, judgment of noninfringement as a matter of law is warranted.

B. KPN did not present legally sufficient evidence of infringement of Claim 26 of the '637 Patent.

KPN failed to present legally sufficient evidence to support an infringement finding for the sole asserted claim of the '637 Patent. Asserted claim 26 depends from claim 16, which requires an "access deny time interval ***for each terminal***." PX 1, Claim 16 (emphasis added). The Court construed "access deny time interval" as a "time slot, bounded by particular (albeit potentially variable) beginning and end times, during which access to the telecommunications

network is denied." Dkt. 80 at 71. The claim further requires "***a register configured for storing*** the unique identifier of at least one terminal in combination with ***at least one access deny time interval***…." PX 1, Claim 16 (emphasis added). KPN failed to prove that Ericsson's accused products included an access deny time interval for each terminal, or that such timer interval is stored in a register in combination with an identifier of a terminal. For each and both of these reasons, the Court should grant Ericsson's motion.

i. KPN did not present legally sufficient evidence that the accused Ericsson equipment implements an access deny time interval for each terminal.

KPN relied on the presence of a "back-off timer" to prove an alleged access deny time interval in Ericsson's accused equipment. Ex. A, 8/23/22 Trial Tr. (Mangione-Smith Direct) at 94:6-10. The evidence, however, conclusively established that the accused Ericsson products do not deny access to each terminal that has been sent a back-off timer. *Intell. Ventures I LLC v. Motorola Mobility LLC*, 870 F.3d 1320, 1331 (Fed. Cir. 2017) (plaintiff's theories "amount to mere speculation or attorney argument and do not provide substantial evidence supporting the jury's verdict of direct infringement").

Both parties agreed that the accused devices do not deny access to terminals seeking to make emergency calls—even if an emergency call occurs within the time period accused of comprising the claimed "access deny time interval." Ex. A, 8/23/22 Trial Tr. (Mangione-Smith Direct) at 96:4-22 ("Q. ***Does that mean that a terminal with a back-off timer will never make an access request while the back-off timer is running?*** A. ***No***. This is one of those cases where I think you might say the exception proves the rule. You certainly wouldn't want to say, if you need to call 911, you can't call 911." (emphases added)); Ex. B, 8/24/22 Trial Tr. (Wicker Direct) at 239:17-22 ("Q. Is that the way Ericsson's products work? A. No. Q. What's different? A. One thing that's different is that Ericsson simply doesn't deny access based on this time

interval. For example, ***if you make a 911 call, you'll be allowed through***." (emphasis added)), 240:9-24, 242:9-13, 244:3-7.

KPN's infringement expert, Dr. Mangione-Smith, admitted that he confirmed in the Ericsson source code that that the accused devices would never deny access to emergency calls based on a back-off timer. Ex. A, 8/23/22 Trial Tr. (Mangione-Smith Cross) at 169:25-170:6 ("Q. And that source code shows you that ***if they get an emergency call, they are not going to use a back-off timer to deny access***. Correct? A. That's right. ***A 911 call will go through***." (emphases added)). Dr. Wicker confirmed this fact. Ex. B, 8/24/22 Trial Tr. (Wicker Direct) at 243:6-17 (showing and explaining source code from DX0374; [redacted]); DX0374.

Although Dr. Mangione-Smith attempted to characterize the allowance of emergency calls as "the exception [that] proves the rule" (Ex. A, 8/23/22 Trial Tr. (Mangione-Smith Direct) at 96:4-22), he never explained how the claim requirement of an "access deny time interval for each terminal" could be satisfied in light of these facts. Dr. Wicker, on the other hand, referenced and relied upon the actual language of Claim 16 when he confirmed that the emergency call operation precluded finding infringement.[6] Ex. B, 8/24/22 Trial Tr. at 244:8-16 (Wicker Direct) ("Q. ***Does this claim allow for exceptions?*** A. ***No, it does not.*** Q. What does it require? A. It says each terminal. ***Each terminal will have an access deny time interval during which it will not be allowed access to the network***." (emphases added)); *see also id.* at 239:7-12 ("Okay. So

[6] Claim 16 states that the claimed access deny time interval "*for each terminal* is a variable time interval x-y that is scheduled depending on network load experienced by, or expected for, the telecommunications network, access to the telecommunications network being denied *to the each terminal* if the network load is above, or is expected to be above, a particular threshold." PX 1 ('637 Patent), Claim 16.

you've got a system that has multiple terminals in it in this claim [16]? A. That's right. Q. And you have to have a[n] access deny time interval for each of them? A. That's right."), 244:3-7 ("Q. In light of the fact that emergency calls will always be let through, even if there's a back-off timer running, can the Ericsson products meet this claim language of an access deny time interval for each terminal? A. No.").

Accordingly, the uncontroverted evidence at trial shows that Ericsson's products do not deny access based on a time interval and that there is no access deny time interval for each terminal. Rather, the jury heard that Ericsson's products allow phones to make an emergency call, whether there is congestion or not and whether or not a backoff timer is set. The Court should grant judgment of noninfringement as a matter of law with respect to the '637 Patent.

ii. KPN did not present sufficient evidence that the Ericsson SGSN-MME and PCC store any access deny time interval in a register.

KPN's infringement proof for the '637 Patent also was deficient for a second, and independent, reason: KPN failed to establish that the Ericsson accused products have a "register configured for storing the unique identifier of at least one terminal in combination with at least one access deny time interval." PX 1, Claim 16.

The Court confirmed in its claim construction that the claimed "access deny time interval" must be "***bounded by particular (albeit potentially variable) beginning and end times***, during which access to the telecommunications network is denied." Dkt. 80 at 73 (emphasis added). KPN's expert put forward a theory that the "access deny time interval" is an indeterminate duration that begins when the network first determines there is congestion, continues for an indeterminate time while the network determines a back-off timer to send the phone and sends that timer to the phone, and further continues until the phone starts that timer and the timer elapses.

> Q. Did you see an access deny time interval in Ericsson's products?
>
> A. I did. . . . There is a ***time called a start time when it's determined that the network is congested***. At some point in time in the future, a request has come in, it's -- the network is congested, it has to be rejected. So it ***calculates the back-off timer for that request, and the network sends it to the cell phone. That's the middle time***. And then at the ***end of that, the back-off timer expires***, so the deny time interval is that whole time period.

Ex. A, 8/23/22 Trial Tr. (Mangione-Smith Direct) at 87:25-88:10 (emphases added), 113:17-19 ("The end time is calculated as the start time, plus when the reject message is sent, plus the back-off time rate interval."); *see also* Ex. B, 8/24/22 Trial Tr. (Wicker Direct) at 247:19-248:21 (summarizing understanding of Dr. Mangione-Smith's theory regarding the access deny time interval). The following demonstrative was shown to the jury to illustrate the principle of the access deny time interval:[7]

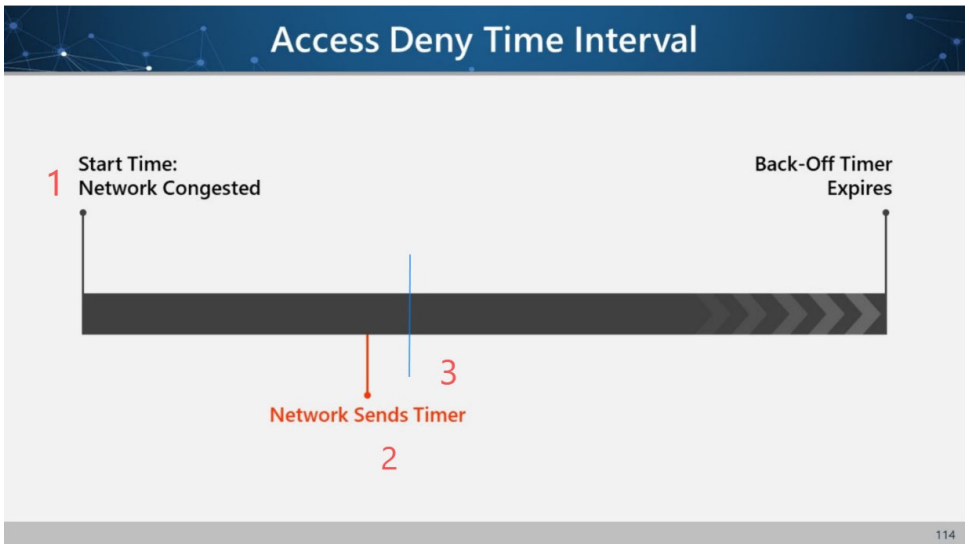

[7] The image shown here is an annotated version of Dr. Mangione-Smith's direct examination demonstrative, which was annotated during his cross examination. Ex. A, 8/23/22 Trial Tr. (Mangione-Smith Direct), at 87:25-88:10 (discussing Plaintiff's demonstrative slide 114); *id.* (Mangione-Smith Cross) at 170:8-173:1 (annotating Plaintiff's demonstrative slide 114 with numerals "1," "2", and "3" and the light blue line), 177:16-178:4 ("Q. . . . Let's look at your diagram here. There's time No. 1 where the network congestion is found. Right? A. Yes. Q. Some time passes and there's time No. 2 when you send the timer. Right? A. Right. After being in a congested situation on a time 2, you send the timer. Q. Then some more time passes and you've got time No. 3. That's when you actually start the timer. Right? A. Sure. Q. And then it runs for the duration of however long the timer is. Right? A. Sure.").

There is no evidence in the trial record that the accused Ericsson products store the time period identified by KPN as the access deny time interval (*i.e.*, the particular time that the system determines that the network is congested and the particular time when the back-off timer expires) anywhere, let alone in a register in combination with a terminal identifier. During his cross-examination discussion of the above annotated demonstrative, Dr. Mangione-Smith admitted that, while he claimed he was prepared to show the jury such evidence, he did not actually show the jury any evidence that Ericsson's products store at least the time between network congestion being determined (time 1 in the above diagram) and the sending of the back-off timer (time 2 in the above diagram): Ex. A, 8/23/22 Trial Tr. (Mangione-Smith Cross) at 173:11-176:5 ("Q. Okay. ***So you haven't shown that to the jury today***. A. ***I don't think that that source code was put up, No. No.***" (emphasis added)).[8]

This was observed during trial by Dr. Wicker. Ex. B, 8/24/22 Trial Tr. (Wicker Direct), at 248:22-249:5 ("Q. All right. Now, in the source code that [Dr. Mangione-Smith] showed the jury for this idea that there'd be a register that stores the access deny time interval, did he ever show any source code that showed this time interval from this start point to that end point? A. No, he did not. Q. What did he point to? A. He pointed to code that controlled a back-off timer. In other words, from 3 to 4.").

Dr. Mangione-Smith further admitted that he had no way of even knowing, and therefore

[8] When Dr. Mangione-Smith was pressed on this issue, he only identified the system clock, not storage of the time interval. Ex. A, 8/23/22 Trial Tr. (Mangione-Smith Cross) at 178:10-22 ("There is a running clock value in the system which I saw in the source code, and this is how a computer system works. It keeps track of what the time is."). At no point did KPN identify how the claim requirement for storing an interval can be satisfied by merely storing the current point in time, i.e., the clock. Testimony that storage of a clock satisfies storage of an interval need not be credited. *See Duncan Parking Techs., Inc. v. IPS Grp., Inc.*, 914 F.3d 1347, 1363 (Fed. Cir. 2019) ("Here, Dr. Rosing's opinion that the Liberty Meter's keypad may comprise a portion of the cover panel is clearly foreclosed by the district court's claim construction. In such a situation, the district court is not obligated to credit an expert's testimony.").

did not show the jury any source code showing storage of the time between the sending of the back-off timer (time 2 in the above diagram) and when the phone receives and starts the back-off timer (time 3 in the above diagram). Ex. A, 8/23/22 Trial Tr. (Mangione-Smith Cross), at 178:23-179:1; *see also* Ex. B, 8/24/22 Trial Tr. (Wicker Direct), at 24:17-20 (confirming that the time that the back-off timer is sent to the phone and the phone starts the timer is unknown and is dependent on other factors). He also confirmed that at least the first two of the three time intervals that supposedly make up the "access deny time interval" under KPN's infringement theory has an indeterminate duration of time. Ex. A, 8/23/22 Trial Tr. (Mangione-Smith Cross) at 171:8-13 ("Q. . . . There's no set amount of time that that will take. Right? A. That's right."), 172:1-20 ("Q. And on this slide ***you haven't indicated exactly where in time it would be that the phone would receive that***. Right? A. ***That's true.*** It's not going to be very long, but ***it's not a precise amount of time***, yeah." (emphases added)). Ericsson's technical expert, Dr. Wicker, also testified as to the variance in these times. Ex. B, 8/24/22 Trial Tr. (Wicker Direct) at 240:25-241:20.

In sum, the Court found that an "access deny time interval" is a time slot bounded by *particular* beginning and end times, and the asserted claim requires that this bounded time be stored in a register. Dr. Mangione-Smith explained that KPN's theory for showing the claimed access deny time interval hinges on calculating the end time "as the start time, plus when the reject message is sent, plus the back-off time rate interval." Ex. A, 8/23/22 Trial Tr. (Mangione-Smith Direct) at 113:17-19. But, because it is undisputed that both the time intervals between: (a) the start time and the sending of the reject message and (b) the sending of the reject message and the start of the back-off timer are unknown—and at least the time that the reject message is sent is not stored in the system—it is impossible to calculate the duration of the alleged access

deny time interval (i.e., the time interval beginning with the determination of network congestion, continuing through an indeterminate period when a message is composed, sent, and ultimately received by the terminal), to the expiration of the back-off timer period (i.e., the end time alleged by KPN). KPN failed to prove that it would be possible to know, much less store, the required interval.[9]

Given that failure, Dr. Mangione-Smith did not try to establish storage of the claimed interval and pointed only at the system clock, which he admitted indicates "what the time is" rather than a time interval. Ex. A, 8/23/22 Trial Tr. (Mangione-Smith Cross) at 178:10-22. This was confirmed by Dr. Wicker, who explicitly testified that Ericsson's accused products do not include any register configured for storing the time from determining the system is congested and a request must be denied until the time a back-off timer expires. Ex. B, 8/24/22 Trial Tr. (Wicker Direct) at 247:8-18 ("Q. . . . So does the Ericsson system have a register like this where identifiers of phones are stored along with a particular start time and a particular end time of an access deny time interval? A. No, it does not."); *id.* at 248:22-249:10 ("Q. Would it even be possible to know what this end time is given the lack of knowledge of how long the time is between what we've labeled as 1 and 2? A. No. 1 and 2 are essentially random variables, so you would not know from the outset when 4 would occur."). Given the on-point testimony of Dr. Wicker, KPN cannot rely on Dr. Mangione-Smith dodging the issue by generally referring to a system clock. *See Centricut, LLC v. Esab Grp., Inc.*, 390 F.3d 1361, 1370 (Fed. Cir. 2004).

[9] KPN cannot rely solely on the T3346 back-off timer as meeting the "register" requirement. Dr. Mangione-Smith testified at trial that the back-off timer "is used to calculate the access deny time interval"—not that it alone constitutes the access deny timer interval. Ex A, 8/23/22 Trial Tr. (Mangione-Smith Direct) at 86:9-11. To say otherwise would violate the Court's claim construction, which explicitly recognized that an "access deny time interval" does not encompass use of a "back-off timer." Dkt. 80 at 73 ("For clarity, the Court here adopts the *Samsung* construction . . . . This also amount to adopting the Court's *rejection* of Plaintiff's proposal in *Samsung* of encompassing a 'back-off timer.'").

KPN therefore failed to prove that a register exists in Ericsson's base stations that is configured to store the claimed access deny time interval. Accordingly, no reasonable jury could have found that the "access deny time interval" requirements of the asserted claim were satisfied.

C. KPN did not present legally sufficient evidence that Ericsson infringed Claim 11 of the '235 Patent.

KPN failed to present legally sufficient evidence to support the jury verdict that the accused products directly infringe Claim 11 of the '235 Patent. That claim requires "a first generator configured to determine an expected service code associated with the type of communication channel via which the authentication data request was received by the network," and "a second generator configured to generate . . . a modified expected response, wherein the modification of the expected response depends on the determined expected service code." PX 3, Claim 11. The Court construed the term "expected service code" to mean an "expected code that ***identifies a communication channel***." Dkt. 80 at 64 (emphasis added).

However, the trial record does not contain substantial evidence that Ericsson's CCSM determines a service code that identifies a communication channel, let alone that it modifies an expected response based on such a code. During trial, Dr. Mangione-Smith acknowledged that the service code must identify a channel, but he could only find and point to a code that identified the 5G "service," but not any communication channel providing that service. Ex A, 8/23/22 Trial Tr. (Mangione-Smith Direct) at 107:2-17 ("Expected service code is just the service code that someone expects that -- expects to identify a communications channel. Now, code here could be just a number. ***It could be if you receive a number 113, you know that that's 5G, or it could say 5G***." (emphasis added)), 108:1-11 ("If you look to the last message to the far right, the request that says nudum_UEAuthentication_GetRequest to the UDM, that includes a service code ***that uniquely identifies the service as 5G***." (emphasis added)). Dr. Mangione-

Smith's only theory regarding the claimed "expected service code" relied on something called a "serving network name." *Id.* at 109:8-24 (stating that the serving network name "identifies the network over which the request has come" and "comes from the first generator"), 110:21-11:23 (discussing PX 742; explaining tha [redacted]. To the extent KPN asserted that the "5G:" code satisfies the expected service code without providing any evidence that the "5G:" code identifies a ***channel***, such an assertion is merely conclusory and is not substantial evidence. "We do not accord weight to conclusory expert testimony." *cxLoyalty, Inc. v. Maritz Holdings Inc.*, 986 F.3d 1367, 1378 (Fed. Cir. 2021).

Neither KPN's expert testimony nor the discussed trial exhibits disclosed a ***channel*** being identified as required by the Court's construction. The reason for that evidentiary failure was explained by Professor Jeffay. His unimpeached testimony detailed the role of 5G as a type of access service (*i.e.*, a type of network that contains channels) that does not identify a particular channel within the network.[10] Ex. B, 8/24/22 Trial Tr. (Jeffay Direct) at 360:8-21 ("[T]o satisfy the expected service code of the '235 Patent, it has to be a code that identifies a communication channel, and simply the letters 5 and G don't identify a communication channel."); *see also id.* at 358:2-359:2 ("Q. Why don't [the nudum_UEAuthentication_GetRequest message and the serving network name identified by Dr. Mangione-Smith] qualify as an expected code identifying a communication channel? A. The very simple reason is they -- ***none of those values***

[10] Professor Jeffay provided the jury with an analogy to explain this difference. He explained that a television network or a radio network is a type of network, and within those networks there are communications channels within the network (*e.g.*, a channel on a television). With respect to cellular systems, 4G and 5G networks are types of networks, as explained by Professor Jeffay, and the actual communications channels that phones use to transmit and receive data are within those networks. Ex. B, 8/24/22 Trial Tr. (Jeffay Direct), at 351:24-352:13.

are code that identifies a communication channel." (emphasis added)). "[T]he court should give credence to the evidence favoring the nonmovant as well as that evidence supporting the moving party that is uncontradicted and unimpeached." *Integra Lifesciences I, Ltd. v. Merck KGaA*, 496 F.3d 1334, 1345 (Fed. Cir. 2007) (internal quotation marks omitted).

During cross examination of Dr. Jeffay, KPN pointed to disclosure in the '235 Patent that "[i]nserting the service code into the response allows the SI module to inform the network 316 about the communication channel (Bluetooth 314a, WLAN 314b, ***3G*** 314c, Ethernet 314d, etc.) through which the authentication request was received from the network." Ex. C, 8/25/22 Trial Tr. (Jeffay Cross) at 8:4-8; PX 3, at 8:28-34 (emphasis added). Through this questioning, KPN implicitly argued that this disclosure suggested that the term "5G" identifies a communication channel. Ex. C, 8/25/22 Trial Tr. (Jeffay Cross) at 8:4-10. But in doing so, KPN failed to account for the language of asserted Claim 11, which—as construed—requires the "service code" to "identify the communication channel" and also to be "associated with a type of communication channel." *See* PX 3 at Claim 11 (requiring "a first generator configured to determine an expected service code associated with the type of communication channel"); *see also* Ex. C, 8/25/22 Trial Tr. (Jeffay Redirect), at 9:4-9 (explaining that a person of skill in the art reading the disclosure identified by KPN would "understand that these -- the things in parentheses are referring to the types of communication channel"). This distinction between the communication channel itself and the type of communication channel is confirmed by the '235 Patent disclosure. The '235 Patent figure related to the disclosure identified by KPN discusses generally a "network 316" and then identifies specific channels within that network, including a specific "3G 314c" channel, as seen below:

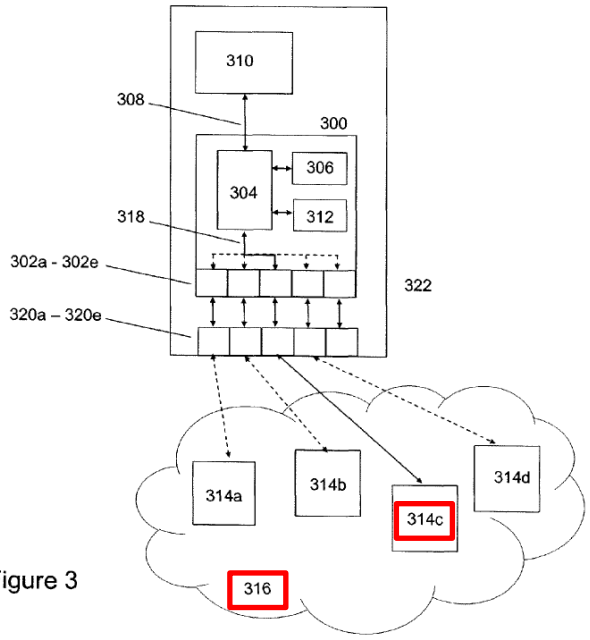

Figure 3

PX 3, at Fig. 3 (annotations added in red); *see also* Ex. C, 8/25/22 Trial Tr. (Jeffay Redirect), at 9:10-13 ("Q. And the 314c, is that a channel number? A. Yes. Q. So it's also identifying the channel number here? A. Yes."). Elsewhere, the '235 Patent references the more general term "3G" as merely identifying a type of network service, but not a specific channel used by that service. *See, e.g.*, PX 3, at 3:30-31 ("3G type radio interface"), 6:35 ("3G type network services"), 5:34-35 ("3G-type (e.g. UMTS) mobile network"). KPN's proof at trial was limited to identifying "5G" as a type of network services. Ex. A, 8/23/22 Trial Tr. (Mangione-Smith Direct) at 108:1-11 ("If you look to the last message to the far right, the request that says nudum_UEAuthentication_GetRequest identifies the UDM, that includes a service code ***that uniquely identifies the service as 5G***." (emphasis added)); *see also id.* at 109:8-24 ("Serving network name identifies the network over which the request has come."). Accordingly, KPN failed to establish that the generic term "5G" identifies a communications channel (as opposed to a type of communication channel) through which the authentication request was received. *See, e.g.*, Ex. B, 8/24/22 Trial Tr. (Jeffay Direct) at 360:21-361:4 ("Q. [W]hy doesn't just 5G identify

a communication channel? A. Well, 5G is a type of network; it's not a channel within that network. Q. . . . [H]ow many channels are in a 5G system? A. . . . [M]any hundreds to thousands.").

The only evidence presented at trial regarding the relationship between 5G and communication channels established that "5G," by itself, does not distinguish among channels. Further, Professor Jeffay's testimony is relevant because Dr. Mangione-Smith failed to identify an identified communication channel "associated with a type of communication channel." Without such evidence, no reasonable jury could have found that Ericsson CCSM satisfied the properly construed claim. *See Centricut*, 390 F.3d at 1370 ("in a case involving complex technology, where the accused infringer offers expert testimony negating infringement, the patentee cannot satisfy its burden of proof" without expert testimony). Accordingly, KPN failed to present legally sufficient evidence that the accused product infringes the '235 Patent, and judgment of noninfringement as a matter of law is appropriate.

IV. ERICSSON IS ENTITLED TO JUDGMENT OF INVALIDITY OF THE '089 PATENT CLAIMS AS A MATTER OF LAW IN THE EVENT THE COURT ALLOWS KPN TO SUPPORT INFRINGEMENT BASED ON EVIDENCE THAT TWO CELLS SATISFIES THE CLAIMS' REQUIREMENT OF TWO WIRELESS ACCESS NETWORKS.

Ericsson presented expert testimony that asserted claims of the '089 Patent were anticipated by the prior art under KPN's assumption that measuring on two cells could be measuring on two wireless access networks because it then disclosed the claims' requirements to a person of ordinary skill. Ex. B, 8/24/22 Trial Tr. (Wicker Direct), at 223:17-25, 228:15-25, 277:5-7. JMOL is proper where "there was no evidence at trial in conflict with [movant's] evidence." *Integra Lifesciences*, 496 F.3d at 1345. KPN chose to present no rebuttal evidence. Ex. C, 8/25/22 Trial Tr., at 97:17-20.

Instead, KPN asked Dr. Wicker whether particular words were present in the prior art.

Ex. B, 8/24/22 Trial Tr. (Wicker Cross) at 319:22 ("Okay. The word 'selecting' is not here. Right?"). The proper standard, however, is not whether the exact word is used, but what is disclosed to a person of ordinary skill in the art. In *Bradium Techs. LLC v. Iancu*, 923 F.3d 1032 (Fed. Cir. 2019), it was "undisputed" that the prior art did not "expressly disclose" a claim limitation, but the Court noted that "the question here is whether Reddy's teaching . . . discloses to a person of ordinary skill in the art that [the claim limitation] is used." *Id.* at 1048. JMOL is warranted because there is no conflict under the proper standard of anticipation.

V. ERICSSON IS ENTITLED TO JUDGMENT AS A MATTER OF LAW BECAUSE NO REASONABLE JURY COULD HAVE FOUND WILLFUL INFRINGEMENT.

Ericsson moves for judgment as a matter of law on willfulness. To establish willful infringement of a patent, KPN must prove that Ericsson was (1) either aware of an asserted patent or subjectively believed there was a high probability the patent existed and deliberately avoided learning that fact, and (2) disregarded information or otherwise acted in a subjectively reckless manner concerning potential infringement. *See WBIP, LLC v. Kohler Co.*, 829 F.3d 1317, 1341 (Fed. Cir. 2016); *Halo Elecs., Inc. v. Pulse Elecs., Inc.*, 136 S. Ct. 1923, 1933-34 (2016); *SRI Int'l, Inc. v. Cisco Sys., Inc.*, 14 F.4th 1323, 1329 (Fed. Cir. 2021). "Knowledge of the asserted patent and evidence of infringement is necessary, but not sufficient, for a finding of willfulness. Rather, willfulness requires deliberate or intentional infringement." *Bayer Healthcare LLC v. Baxalta Inc.*, 989 F.3d 964, 988 (Fed. Cir. 2021).

Consistent with these cases, the jury was instructed to find willfulness if they found that "Ericsson deliberate or intentionally infringed the [A]sserted [P]atents" and that they "may not determine that the infringement was willful just because Ericsson knew of the [A]sserted [P]atents and infringed them." Ex. D, 8/26/22 Trial Tr. at 27:9-13. The jury was further

instructed that they may find willfulness if "Ericsson acted in reckless or callous disregard of, or with indifference to, the rights of KPN." *Id.* at 27:14-16.

KPN failed to present sufficient evidence to prove willful infringement by Ericsson. Rather than provide evidence of subjective belief of infringement or other egregious conduct, KPN pointed to three circumstances: (i) pre-suit notice of the Asserted Patents in 2017, (ii) allegations of delay during the parties' negotiations, and (iii) testimony by KPN's corporate representative that an Ericsson employee made the statement that Ericsson "couldn't care less" about compensating KPN for the years 2018 and 2019. *See* Ex. E, 8/22/22 Trial Tr. (Gerritse Direct) at 212:2-213:22, 227:11-228:7, 234:1-3. Pre-suit notice alone is insufficient to prove willful infringement. *Bayer*, 989 F.3d at 988. And for the remaining two allegations, KPN did not present legally sufficient evidence for a reasonable jury to find Ericsson willfully infringed the Asserted Patents. Accordingly, the Court should enter judgment as a matter of law in favor of Ericsson on willfulness. *See, e.g.*, *Erfindergemeinschaft Uropep Gbr v. Eli Lilly & Co.*, No. 2:15-cv-1202-WCB, Dkt. 359 at 2, 5 (E.D. Tex. May 18, 2017) (granting JMOL for no willfulness where there was no "egregious" or "malicious" behavior, and because "a finding of willfulness is not required simply because the infringer knew about the patent at issue"); *OPTi Inc. v. Apple, Inc.*, No. 2:07-cv-21-CE, 2009 WL 4727912, at *3 (E.D. Tex. Dec. 3, 2009) (granting JMOL for no willfulness where "the issues of infringement and validity were hotly contested, close, and required an intensely factual inquiry").

A. The evidence does not establish unreasonably delay or egregious conduct by Ericsson during pre-suit negotiations.

KPN's evidence of willfulness is insufficient because it relies entirely upon the allegations that Ericsson unreasonably delayed negotiations and expressed the opinion that it did

not care about compensating KPN. *See* Ex. E, 8/22/22 Trial Tr. (Gerritse Direct) at 227:11-228:7, 234:1-3. But the great weight of the evidence is to the contrary.

First, KPN's allegations of delay are unfounded and directly contradicted by the unrebutted testimony of Ericsson's corporate representative, Patricio Delgado. *See* Ex. B, 8/24/22 Trial Tr. (Delgado Cross) at 7:23-8:2 ("Q. And do you recall KPN suggesting that Ericsson had dragged out negotiations through 2017? A. I remember that. Q. Is that true? A. No, sir."). The timeline is this. KPN provided its initial claim charts to Ericsson in January 2017. Ex. E, 8/22/22 Trial Tr. (Gerritse Cross) at 278:6-9. Ericsson then "analyzed the claim charts and ultimately gave some of [its] thoughts to KPN by the end of the year." Ex. B, 8/24/22 Trial Tr. (Delgado Cross) at 8:3-7. After that initial analysis, Ericsson concluded that it "didn't use" the Asserted Patents. *Id.* at 8:8-10. At that point, the parties "effectively reached a point where [they] agreed to disagree on the patents," and Ericsson then shifted the negotiation to its business unit in the Netherlands from 2018 to 2019 to try to work out a deal related to KPN's acquisition of equipment for the build out of its 5G network. *Id.* at 13:21-14:15, 15:19-22. After the business unit was unable to reach agreement, the patent group at KPN reapproached Ericsson's IPR group and sent additional patents for it to consider. *Id.* at 15:23-16:2. Ericsson carefully reviewed the claim charts sent by KPN and "communicated [its] position in writing in a PowerPoint that [Ericsson] sent to KPN at the end of 2019." *Id.* at 18:8-9. Then, after receiving feedback from KPN, Ericsson provided yet another response in the form of a PowerPoint and Microsoft Word document in February 2020. *Id.* at 18:9-13. Far from evidencing an intent to delay negotiations, the testimony from Mr. Delgado shows that Ericsson acted diligently in responding to KPN's infringement claims throughout 2017, 2018, 2019, and 2020.

Second, the testimony of KPN's corporate representative, Cornelia Gerritse, that she heard one Ericsson employee state that Ericsson "couldn't care less" about compensating KPN for the years 2018 and 2019 is legally insufficient to support a finding of willfulness. *See* Ex. E, 8/22/22 Trial Tr. (Gerritse Direct) at 234:1-3. Moreover, this testimony was directly rebutted by another one of KPN's representatives at those meetings, Frank Muller, who testified that Ericsson was respectful and professional during the pre-suit negotiations. Ex. C, 8/25/22 Trial Tr. (Muller Direct) at 97:6-9.

Accordingly, the evidence offered by KPN does not go to whether Ericsson had a specific intent to infringe the Asserted Patents and does not rise to the level of egregious conduct. To the contrary, Ericsson acted diligently, respectfully, and professionally during pre-suit negotiations. A reasonable jury could not find otherwise.

B. The evidence proves that Ericsson carefully considered KPN's infringement claims, dedicated significant resources to investigating those claims, and concluded that the Asserted Patents were not infringed or not valid.

As explained above, KPN's evidence concerning Ericsson's pre-suit negotiations is insufficient to support a finding of willfulness. Moreover, "[t]o establish willfulness, the patentee must show the accused infringer had a specific intent to infringe at the time of the challenged conduct." *Bayer*, 989 F.3d at 987. KPN failed to prove such a specific intent. Rather, the evidence conclusively establishes Ericsson's good-faith belief—after expending considerable time and resources—that KPN's patents were either not infringed or invalid. Here, the unrebutted testimony of Mr. Delgado shows that:

- Ericsson calculated a "patent strength ratio" for KPN, and "concluded that KPN's portfolio had zero value for Ericsson" because it "didn't use their patents." Ex. B, 8/24/22 Trial Tr. (Delgado Cross) at 11:1-11.

- Ericsson's technical team that evaluated KPN's patents "had a tremendous amount of experience building Ericsson's network equipment [and] doing

research in specific areas where KPN's patents relate to." *Id.* at 16:13-19. These were "Ph.D.-level people who were doing the analysis" and had "well over a hundred patented families . . . and well over 500 patents to their names." *Id.* at 16:20-23.

- Ericsson's technical team "spent several hundred hours of their time doing the analysis" and spent "between 20 and 30 hours per patent family." *Id.* at 16:24-17:10.

- After its internal analysis, Ericsson concluded that it did not use the Asserted Patents and communicated its conclusions to KPN in writing. *Id.* at 18:2-16.

Thus, as a matter of law, Ericsson is entitled to judgment that it did not willfully infringe the Asserted Patents.

VI. THERE WAS NOT LEGALLY SUFFICIENT EVIDENCE TO HOLD ERICSSON LIABLE FOR $31.5 MILLION IN DAMAGES.

Ericsson is entitled to judgment as a matter of law on damages for three reasons. *First*, during cross examination KPN's damages expert, Mr. Michael Wagner, admitted that he "probably should not have used [[redacted]] as a data point." Ex. A, 8/23/22 Trial Tr., at 272:6-7. KPN did not offer any evidence about the effect of that mistake. *Id*. at 272:10-12 ("The Court: Redirect? [Counsel for KPN]: None, Your Honor. The Court: No redirect?"). As such, because Mr. Wagner's sole damages theory necessarily relied on that license, the jury lacked any evidence supporting the $31.5 million damages verdict it ultimately awarded. *Second*, KPN's expert improperly applied a royalty rate to the entire revenue generated by Ericsson 4G and 5G Radio Access Network ("RAN") equipment, which includes thousands of features independent of the claimed subject matter, without adequate evidence apportioning those revenues to the value of the claimed inventions. *Third*, KPN's expert relied on licensing evidence covering KPN's entire patent portfolio and KPN failed to provide evidence supporting the allocation of value among its patent portfolio to the specific Asserted Patents. Each of these

flaws independently warrants entering judgment as a matter of law in Ericsson's favor. At the very least, the Court should order a new trial on damages. *See* Fed. R. Civ. P. 50(b)(2).

A. Legal Background

The patent owner bears the burden of proving a reasonable royalty damages award. *Oiness v. Walgreen Co.*, 88 F.3d 1025, 1029 (Fed. Cir. 1996). Proof of damages must be carefully tied to the claimed invention's footprint in the marketplace. *See Grain Processing Corp. v. Am. Maize–Products Co.*, 185 F.3d 1341, 1350 (Fed. Cir. 1999) ("To prevent the hypothetical from lapsing into pure speculation, this court requires sound economic proof of the nature of the market and likely outcomes with infringement factored out of the economic picture."). "When the accused technology does not make up the whole of the accused product, apportionment is required." *Finjan, Inc. v. Blue Coat Sys., Inc.*, 879 F.3d 1299, 1309 (Fed. Cir. 2018).

When apportionment is required, the patent owner must "give evidence tending to separate or apportion the [infringer]'s profits and the patentee's damages between the patented feature and the unpatented features, and such evidence must be reliable and tangible, and not conjectural or speculative." *Garretson v. Clark*, 111 U.S. 120, 121 (1884); *Finjan*, 879 F.3d at 1310; *Virnetx, Inc. v. Cisco Sys., Inc.*, 767 F.3d 1308, 1326 (Fed. Cir. 2014) ("No matter what the form of the royalty, a patentee must take care to seek only those damages attributable to the infringing features."); *Ericsson, Inc. v. D-Link Sys., Inc.*, 773 F.3d 1201, 1226 ("[W]here multi-component products are involved, the governing rule is that the ultimate combination of royalty base and royalty rate must reflect the value attributable to the infringing features of the product, and no more.").

The "entire market value" rule is a narrow exception to apportionment that permits damages based on a product's total revenues or profits, but only if the patented feature drives the product's demand. *See LaserDynamics, Inc. v. Quanta Comput., Inc.*, 694 F.3d 51, 67 (Fed. Cir.

2012). To recover damages based on a product's total revenues or profits, "the entire value of the whole machine, as a marketable article, [must be] properly and legally attributable to the patented feature." *Garretson*, 111 U.S. at 121.

A party may comply with the apportionment requirement in several ways. As the Federal Circuit has explained, apportionment may be satisfied "by careful selection of the royalty base to reflect the value added by the patented feature, where that differentiation is possible; by adjustment of the royalty rate so as to discount the value of a product's non-patented features; or by a combination thereof." *Ericsson*, 773 F.3d at 1226. Similarly, a party may apportion by using comparable licenses or licensing negotiations for the asserted patent that are already apportioned to reflect the value of the patented technology. *See Bio-Rad Labs., Inc. v. 10X Genomics Inc.*, 967 F.3d 1353, 1377 (Fed. Cir. 2020) (holding that no adjustment of the royalty rate in comparable licenses is required because they already incorporate the required apportionment).

"Actual licenses to the patented technology are highly probative as to what constitutes a reasonable royalty for those patent rights because such actual licenses most clearly reflect the economic value of the patented technology in the marketplace." *LaserDynamics*, 694 F.3d at 79-80. While licenses other than those to the patent-in-suit are potentially relevant, the Federal Circuit "insist[s] that the 'licenses relied upon by the patentee in proving damages [be] sufficiently comparable to the hypothetical license at issue in the suit.'" *Id*. The bar for technical and economic comparability of licenses is quite high. "[A]lleging a loose or vague comparability between different technologies or licenses does not suffice." *Id*. Requiring the underlying technologies to be comparable ensures that experts only "consider licenses that are commensurate with what the Defendant has appropriated. If not, a prevailing Plaintiff would be free to inflate the reasonable royalty analysis with conveniently selected licenses without an

economic or other link to the technology in question." *ResQNet.com, Inc. v. Lansa, Inc.*, 594 F.3d 860, 872 (Fed. Cir. 2010). Ultimately, "there must be a basis in fact to associate the royalty rates used in prior licenses to the particular hypothetical negotiation at issue in the case." *Uniloc USA, Inc. v. Microsoft Corp.*, 632 F.3d 1292, 1317 (Fed. Cir. 2011). "[T]he trial court must carefully tie proof of damages to the claimed invention's footprint in the market place." *ResQNet*, 594 F.3d at 869; *Ericsson*, 773 F.3d at 1226 ("The essential requirement is that the ultimate reasonable royalty award must be based on the incremental value that the patented invention adds to the end product.").

B. Mr. Wagner's damages model depended on a baseline royalty rate untethered from the asserted patents.

KPN's damages methodology falls far short of meeting these exacting requirements. KPN's expert, Mr. Wagner, concluded that Ericsson would have agreed to a reasonable royalty of $31,518,974 for its use of the Asserted Patents. Ex. A, 8/23/22 Trial Tr. (Wagner Direct) at 248:1-3. To arrive at that amount, Mr. Wagner began by calculating a "Baseline Royalty Rate." He then adjusted that Baseline Rate up or down based on the various *Georgia Pacific* factors to arrive at his damages calculations. *Id*. (Wagner Cross) at 251:11-16; *see also*, *e.g.*, Ex. F (Wagner Demonstratives) at 37 (summarizing Mr. Wagner's conclusions with respect to the '089 Patent, listing a "Baseline rate" of 0.1%–0.2% and a "Reasonable Royalty rate" of 0.225% based on the 15 *Georgia Pacific* factors). But Mr. Wagner agreed that if his Baseline Royalty was wrong, then his damages calculations were also wrong. Ex. A, 8/23/22 Trial Tr. (Wagner Cross) at 251:17-20.

To determine his Baseline Rate, Mr. Wagner started with KPN's portfolio-wide "policy rate" of [redacted]. *Id.* at 222:22-223:2.[11] But, because that policy rate covered KPN's entire portfolio, Mr. Wagner looked to two other pieces of evidence to determine a per-patent rate: a [redacted], and a [redacted]. *Id.* at 216:22-217:4, 220:6-10, 222:3-21; Ex. F at 11, 15.

Mr. Wagner used the [redacted] to support the bottom end of his Baseline Royalty Rate of .1 percent. Ex. A, 8/23/22 Trial Tr. (Wagner Direct) at 220:6-10 ("Q. And how did this negotiation between [redacted] inform your opinion as to what the reasonable royalty should be? A. That 0.1 percent is a fair rate for a licensee to pay to the infrastructure patents of KPN."). To support the top end of the Baseline Royalty Rate, of .2 percent, Mr. Wagner relied entirely on the [redacted].

[redacted]

[11] Despite KPN entering into more than [redacted] *Id.* at 215:23-216:1, 255:19-256:4.

Ex. F (Wagner Demonstratives) at 15; *see also* Ex. A, 8/23/22 Trial Tr. (Wagner Direct) at 222:15-19 ("Well, [redacted].").

Mr. Wagner then used this .1 percent to .2 percent Baseline Royalty Rate range, and adjusted it based on the *Georgia Pacific* factors to come up with a "Reasonable Royalty rate" for each Asserted Patent. *See*, *e.g.*, Ex. F (Wagner Demonstratives) at 37, 46, 51. Mr. Wagner then multiplied each patent's alleged "Reasonable Royalty rate" by the Ericsson sales revenue Mr. Wagner contended was relevant to each patent, to arrive at a "Reasonable Royalty Damages" amount for each patent. *Id*. at 38, 47, 52. Across the three Asserted Patents, Mr. Wagner concluded that Ericsson owed $31,518,974 for its use of those patents. The jury ultimately awarded exactly that amount in rendering its verdict. Dkt. 262.

C. KPN did not provide legally viable evidence to support its damages claim.

Mr. Wagner's damages methodology suffers from three fatal flaws. Each of these flaws warrants granting JMOL in Ericsson's favor on damages.

i. Mr. Wagner conceded he should not have relied on the 2009 Sagem License.

First, on cross examination, Mr. Wagner admitted he "probably should not have used [redacted] as a data point." Ex. A, 8/23/22 Trial Tr. (Wagner Cross) at 272:6-7. That [redacted]." PX284 at Clause 7.6. Mr. Wagner used [redacted] to justify not using other agreements [redacted]:

Q. [redacted]

A. [redacted]

[redacted]

Ex. A, 8/23/22 Trial Tr. (Wagner Direct) at 220:19-221:4; *see also id.* at 223:17-224:3; Ex. F (Wagner Demonstratives) at 16. Given his disavowal of these other agreements, Mr. Wagner, to his credit, conceded that he also should not have used the [redacted] either. Ex. A, 8/23/22 Trial Tr. (Wagner Cross) at 272:6-7.

Mr. Wagner's concession was no small disavowal. Without the [redacted], there is no evidence in the record supporting the top end of Mr. Wagner's Baseline Royalty Rate range. Mr. Wagner came up with that range by first looking at KPN's portfolio-wide [redacted] policy rate, and then lowering it to a per-patent rate of .1 percent on the low end using the [redacted], and .2 percent on the high end using the [redacted]. KPN did not offer any redirect of Mr. Wagner or otherwise offer any evidence of the effect of removing the [redacted] from his analysis. *Id.* at 272:10-12. As such, the jury lacked sufficient evidence to award the $31.5 million sought by KPN.

ii. KPN failed to apportion its damages claim solely to the value of the claimed inventions.

Second, even without his disavowal of the [redacted], Mr. Wagner and KPN failed to provide adequate evidence of apportionment. It is undisputed that the accused products contain thousands of features, essentially all of which are unrelated to the inventions claimed in the Asserted Patents. *See* Ex. B, 8/24/22 Trial Tr. (Delgado Re-Cross) at 46:8-15, 47:2-9, 47:19-21 (evidencing that "there's over a thousand features" for Ericsson's LTE software and that

"customers get all the features" as part of a "software bundle" even if the features are not used and are intended for an entirely different geographical market). Apportionment was thus required. *Finjan*, 879 F.3d at 1309.

In attempting to comport with this requirement, KPN and Mr. Wagner ignored the more than [redacted], choosing instead to rely on two pieces of licensing evidence unrelated to those patents: the [redacted] and the [redacted]. *See*, *e.g.*, Ex. C, 8/25/22 Trial Tr. at 125:9-12 (KPN's opposition to Ericsson's Rule 50(a) motion) ("[Y]ou can bake apportionment into the rate. And, indeed, in this case Mr. Wagner has an extremely low rate for precisely that reason. He relies on a comparable offer from [redacted] that does that apportionment for him."). Neither piece of evidence has any relationship to the Asserted Patents, the first of which did not issue until 2014. Ex. A, 8/23/22 Trial Tr. (Wagner Cross) at 253:24. In these circumstances, the Federal Circuit has often cautioned that a trial court must exercise vigilance in assessing the comparability of the licensing evidence not covering the patents-in-suit to the technology covered by those patents. *ResQNet*, 594 F.3d at 869 ("This court has long required district courts performing reasonable royalty calculations to exercise vigilance when considering past licenses to technologies *other* than the patent in suit.").

Presented with a similar scenario in *ResQNet* as the one before this Court, the Federal Circuit found that the district court failed to properly exercise that vigilance. *ResQNet*, 594 F.3d 860. There, the patentee's damages expert determined a "starting point" for a hypothetical negotiation based on seven licenses, five of which were entirely unrelated to the patent-in-suit. *Id*. at 869-70. The district court and the patentee's expert "made no effort to link certain licenses to the infringed patent." *Id*. at 871. "Without that link," the Federal Circuit could not "understand

how the [fact finder] could have adequately evaluated the probative value of [the] agreements." *Id*. (quoting *Lucent Techs., Inc. v. Gateway, Inc.*, 580 F.3d 1301, 1328 (Fed. Cir. 2009)).

The same problem exists here for the [redacted] and the [redacted]. Mr. Wagner himself admitted during his direct examination that the [redacted] covered by the [redacted] "has nothing to do with the patents-in-suit." Ex. A, 8/23/22 Trial Tr. (Wagner Direct) at 222:10-11. Mr. Wagner further explained that the [redacted] was for "[redacted]" and conceded that "[redacted]" *Id.* at 222:3-7, 257:9-19. And there is no evidence in the record about what patents were being discussed in the [redacted]. The [redacted] itself is hearsay and the Court excluded it at as such. Ex. H (Pretrial Tr.) at 182:8-14 ("I'm going to allow these documents to be used as demonstratives as a part of the testimony from the designated expert witnesses, but I'm not going to pre-admit them as exhibits given their third-party hearsay nature.").

In opposing Ericsson's Rule 50(a) motion on this issue, KPN offered scant justification for finding comparability between the technology at issue in this case and the technology being considered in the [redacted]. It argued only that "there is no legal requirement that [Mr. Wagner] relies on the same patents as long as they have comparable technology; and, here again, [Mr. Wagner]'s relying on that Huawei offer which was explicitly for infrastructure products." Ex. C, 8/25/22 Trial Tr. at 125:14-17.

But KPN's argument is incorrect; Mr. Wagner testified that the [redacted] related to "[redacted]" that "[redacted]" Ex. A, 8/22/22 Trial Tr. (Wagner Direct) at 219:21-23 (emphasis added). There is no evidence that Huawei's offer was "explicitly for infrastructure products." But even if it was, that would not meet KPN's burden of proving the comparability between that

offer and the technology covered by the Asserted Patents here. KPN presented no evidence regarding what patents were being discussed during its [redacted]. So even if the products covered by the proposed license were exactly the same—which the evidence firmly contradicts—there is still nothing allowing the Court to "ascertain from the evidence presented the subject matter of the [proposed] agreement[]," *Lucent*, 580 F.3d at 1327-28, because there is no evidence of what technology within those products that Huawei potentially sought to protect via a license. It is thus impossible to "understand how the jury could have adequately evaluated the probative value of th[at] [proposed] agreement[]." *Id*. at 1328.

iii. In relying on its portfolio-wide [redacted] policy rate, KPN failed to provide evidence supporting the allocation of value among its patent portfolio to the Asserted Patents.

Third, KPN relied on licensing evidence covering KPN's entire patent portfolio in the form of its [redacted] policy rate. But KPN did not provide relevant evidence supporting the allocation of value among its patent portfolio to the specific Asserted Patents. Instead, it relied solely on testimony from Mr. Wagner that each of the Asserted Patents would independently be entitled to royalty rates nearly equal to the rate KPN says its entire portfolio of hundreds of patents is worth.

Mr. Wagner and KPN offered only a single justification for these inflated individual royalty rates (ranging from .15 percent for the '235 Patent to .25 percent for the '637 Patent)—"[redacted]" Ex. A, 8/22/22 Trial Tr. (Wagner Direct) at 217:15–19. Thus, according to Mr. Wagner, KPN's [redacted] rate really is like licensing only one or two patents." *Id*. at 218:17-19. But neither Mr. Wagner nor any other KPN expert actually analyzed KPN's portfolio to assess how many patents Ericsson might use. Instead, Mr. Wagner relied

entirely on a 2010 presentation from KPN to Ericsson, in which KPN alleged various Ericsson products at the time practiced various KPN patents:

[redacted]

Ex. F (Wagner Demonstratives) at 10 (excerpting PX 483); Ex. A, 8/22/22 Trial Tr. (Wagner Direct) at 217:22-218:21.

Much like in *Apple Inc. v. Wi-LAN Inc.*, 25 F.4th 960 (Fed. Cir. 2022), Mr. Wagner's conclusion that the Asserted Patents are worth a royalty rate nearly equal to KPN's portfolio-wide rate is "untethered to the facts of the case." 25 F.4th at 973 (vacating a damages verdict where the patentee's damages expert contended the patents-in-suit were "key patents," entitled to royalty rates equal to roughly 75% of the portfolio-wide royalty rates found in allegedly comparable licenses, without any "record evidence supporting [that] assumption"). KPN and its experts did not actually perform any analysis on Ericsson's potential use of other patents in KPN's portfolio at the time of the hypothetical negotiation, nor any other KPN licensee's use of

the Asserted Patents.[12] The negotiation documents between KPN and Ericsson, and KPN and others, indicate that the Asserted Patents were no more remarkable than dozens of other patents in KPN's portfolio. *See*, *e.g.*, PX585 (Nov. 27, 2017 licensing presentation from KPN to Ericsson), at 8-12; DX604 (Dec. 2019 licensing presentation from [redacted]), at DX0604.0004-14. Mr. Wagner's conclusion that the Asserted Patents warrant royalty rates nearly equal to KPN's portfolio-wide rate is thus untethered to the facts of the case and the Court should either grant JMOL in Ericsson's favor on damages or order a new trial.

[12] Notably, in the one presentation that Mr. Wagner offered for the jury, each of the eight KPN patents listed had expired by the time of that hypothetical negotiation. *See* PX483 at 3.

Dated: October 4, 2022

/s/ *Douglas M. Kubehl*
Douglas M. Kubehl
Texas State Bar No. 00796909
Doug.Kubehl@bakerbotts.com
Jeffery S. Becker
Texas State Bar No. 24069354
Jeff.Becker@bakerbotts.com
Harrison G. Rich
Texas State Bar No. 24083730
Harrison.Rich@bakerbotts.com
Melissa L. Muenks
Texas State Bar No. 24097442
Melissa.Muenks@bakerbotts.com
BAKER BOTTS L.L.P.
2001 Ross Avenue
Dallas, Texas 75201
Telephone: (214) 953-6500
Facsimile: (214) 953-6503

Michael Hawes
Texas State Bar No. 24010761
michael.hawes@bakerbotts.com
BAKER BOTTS LLP
One Shell Plaza
910 Louisiana Street
Houston, TX 77002
Telephone: 713-229-1234
Facsimile: 713-229-1522

Theodore Stevenson, III (Lead Counsel)
Texas State Bar No. 19196650
ted.stevenson@alston.com
ALSTON & BIRD LLP
2200 Ross Avenue Suite 2300
Dallas, TX 75201
Tel. 214-922-3400
Fax 214-922-3899

Nicholas Mathews
Texas State Bar No. 24085457
nmathews@McKoolSmith.com
Alexander J. Chern
Texas State Bar No. 24109718
achern@McKoolSmith.com
Carson D. Young
Texas State Bar No. 24106613
cyoung@McKoolSmith.com
MCKOOL SMITH, P.C.
300 Crescent Court Suite 1500
Dallas, TX 75201
Telephone: (214) 978-4000
Telecopier: (214) 978-4044

Samuel F. Baxter
Texas State Bar No. 01938000
sbaxter@McKoolSmith.com
MCKOOL SMITH, P.C.
300 Crescent Court, Suite 1500
Dallas, TX 75201
Telephone: (903) 923-9001
Telecopier: (903) 923-9099

ATTORNEYS FOR DEFENDANTS TELEFONAKTIEBOLAGET LM ERICSSON AND ERICSSON INC.

CERTIFICATE OF AUTHORIZATION TO FILE UNDER SEAL

I hereby certify that the foregoing document is being filed under seal pursuant to the Protective Order entered in this matter.

/s/ *Douglas M. Kubehl*
Douglas M. Kubehl

CERTIFICATE OF SERVICE

I hereby certify that counsel of record who are deemed to have consented to electronic service are being served on October 4, 2022, with a copy of this document via the Court's CM/ECF system per Local Rule CV-5(a)(3).

/s/ *Douglas M. Kubehl*
Douglas M. Kubehl