3GPP TR 32.816 V1.0.0 (2007-05)

Technical Report

3rd Generation Partnership Project;
Technical Specification Group Services and System Aspects;
Telecommunication management;
Study on Management of LTE and SAE
(Release 8)

GLOBAL SYSTEM FOR
MOBILE COMMUNICATIONS

The present document has been developed within the 3rd Generation Partnership Project (3GPP TM) and may be further elaborated for the purposes of 3GPP.
The present document has not been subject to any approval process by the 3GPP Organizational Partners and shall not be implemented.
This Specification is provided for future development work within 3GPP only. The Organizational Partners accept no liability for any use of this Specification.
Specifications and reports for implementation of the 3GPP TM system should be obtained via the 3GPP Organizational Partners' Publications Offices.

Exhibit 1007
IPR2023-00582
U.S. Patent 8,660,560

Keywords

LTE, SAE, OAM, telecom management, network management

3GPP

Postal address

3GPP support office address

650 Route des Lucioles - Sophia Antipolis
Valbonne - FRANCE
Tel.: +33 4 92 94 42 00 Fax: +33 4 93 65 47 16

Internet

http://www.3gpp.org

Copyright Notification

No part may be reproduced except as authorized by written permission.
The copyright and the foregoing restriction extend to reproduction in all media.

© 2007, 3GPP Organizational Partners (ARIB, ATIS, CCSA, ETSI, TTA, TTC).
All rights reserved.

Contents

Foreword....4
Introduction....4
1 Scope....6
2 References....6
3 Definitions, symbols and abbreviations....6
3.1 Definitions....6
3.2 Abbreviations....7
4 Study of LTE and SAE Management....7
4.1 Requirements....7
4.1.1 Evolution of existing SA5 specifications....7
4.1.1.1 Justification....7
4.1.1.2 Requirement Statements....7
4.1.2 Automatic installation of NEs....7
4.1.2.1 Justification....7
4.1.2.2 Requirement Statements....8
4.1.3 Self organising network....8
4.1.3.1 Justification....8
4.1.3.2 Requirement Statements....14
4.1.4 Trace in LTE/SAE....14
4.1.4.1 Justification....14
4.1.4.2 Requirement Statements....14
4.1.5 KPIs in LTE/SAE....15
4.1.6 Site Management....16
4.1.6.1 Justification....16
4.1.6.2 Requirement Statements....16
4.1.7 Fault Management of LTE/SAE....16
4.1.7.1 Justification....16
4.1.7.2 Requirement Statements....16
4.1.8 Configuration Management of LTE/SAE....16
4.1.8.1 Justification....16
4.1.8.2 Requirement Statements....17
4.1.9 Performance Management of LTE/SAE....17
4.1.9.1 Justification....17
4.1.9.2 Requirement Statements....18
4.2 Management architecture for LTE and SAE....18
4.2.1 Reuse of existing 3GPP management architecture....18
4.2.2 Possible extensions....18
5 Conclusions and recommendations....18
Annex A : Reuse of 3GPP TSs for LTE and SAE management....19
A.1 TSs to be reused....19
Annex B : Change history....23

Foreword

This Technical Report has been produced by the 3rd Generation Partnership Project (3GPP).

The contents of the present document are subject to continuing work within the TSG and may change following formal TSG approval. Should the TSG modify the contents of the present document, it will be re-released by the TSG with an identifying change of release date and an increase in version number as follows:

Version x.y.z

where:

x the first digit:

1 presented to TSG for information;

2 presented to TSG for approval;

3 or greater indicates TSG approved document under change control.

y the second digit is incremented for all changes of substance, i.e. technical enhancements, corrections, updates, etc.

z the third digit is incremented when editorial only changes have been incorporated in the document.

Introduction

The LTE and SAE systems need to be managed. As LTE and SAE are evolvements of UMTS, the management should also evolve from UMTS.

A reuse of the existing UMTS management standard solutions will have the following benefits:

- It is proven in operation;
- It will minimise both the standardisation and product development efforts (i.e. the cost and time);
- It provides a base for on which more functionality can be developed (compared with making everything new from the start);
- It will shorten the time to market for LTE and SAE systems;
- It will facilitate a seamless coexistence with UMTS management systems.

The complexity of the LTE/SAE network will also place new demands on the Operations and Maintenance of the Network, therefore as well as re-using and evolving existing Management solutions, Management solutions for LTE/SAE will also need to encompass some new functionality (e.g. Auto-Configuration, Auto-Optimisation, Information Model Discovery, and development of P2P Interfaces)

Functionality shall be supported by clear use cases or other documented justification.

Best Practice in O&M has changed dramatically in recent years. This has been driven both by changes in the networks being managed and also by the increase in the number and complexity of services being supported on those networks.

The emphasis has changed from infrastructure management to the management of services supported on that infrastructure.

There is less focus on having all management applications at the EMS layer and greater emphasis on interfaces and data availability such that the NMS and OSS layer have access to the required data.

The concept of Next Generation Networks decouples the supported services from the underlying access network. It was easier in the days of voice based services to assume that by managing the infrastructure the services were also managed. The multitude and complexity of today's services means that this is no longer the case.

Element Management is about managing a single domain from a single vendor. It no longer makes sense to do any significant analysis at this level since there is a strong interdependency between domains and vendors to assure end to

end quality of service. It still makes sense to support some vendor/domain specific applications at this level, but the emphasis is on support of standardized interfaces that make the element management data available to the NMS and OSS.

An increased emphasis on O&M related standards is pivotal in enabling analysis applications at the NMS and OSS level. This makes it possible to do end to end analysis in the context of services rather than just RAN specific or Core specific analysis for a given vendors equipment node.

The LTE/SAE networks will increase the numbers of NE's to be managed, while at the same time having strong requirements (ref [3]) that emphasise the need to reduce network complexity and lower operating costs.

1 Scope

The present document intends to study the reuse of UMTS management for LTE and SAE to decide on which parts shall be reused without any change, which parts shall be changed and which existing parts cannot be reused at all and make recommendations about that.

It also intends to recommend management principles for LTE and SAE.

2 References

The following documents contain provisions which, through reference in this text, constitute provisions of the present document.

- References are either specific (identified by date of publication, edition number, version number, etc.) or non-specific.
- For a specific reference, subsequent revisions do not apply.
- For a non-specific reference, the latest version applies. In the case of a reference to a 3GPP document (including a GSM document), a non-specific reference implicitly refers to the latest version of that document *in the same Release as the present document*.

[1] 3GPP TR 21.905: "Vocabulary for 3GPP Specifications".

[2] 3GPP TS 32.421: "Telecommunication management; Subscriber and equipment trace; Trace concepts and requirements".

[3] 3GPP TS 32.422: "Telecommunication management; Subscriber and equipment trace; Trace control and configuration management".

[4] 3GPP TS 32.423: "Telecommunication management; Subscriber and equipment trace; Trace data definition and management".

[5] 3GPP TS 32.441: "Telecommunication management; Trace Management Integration Reference Point (IRP): Requirements".

[6] 3GPP TS 32.442: "Telecommunication management; Trace Management Integration Reference Point (IRP): Information service (IS)".

[7] 3GPP TS 32.443: "Telecommunication management; Trace Management Integration Reference Point (IRP): Common Object Request Broker Architecture (CORBA) Solution Set (SS)".

[8] 3GPP TS 32.101: "Telecommunication management; Principles and high level requirements".

[9] 3GPP TS 32.102: "Telecommunication management; Architecture".

[10] 3GPP TS 32.300: "Telecommunication management; Configuration Management (CM); Name convention for Managed Objects".

3 Definitions, symbols and abbreviations

3.1 Definitions

For the purposes of the present document, the terms and definitions given in TR 21.905 [1] apply.

3.2 Abbreviations

For the purposes of the present document, the following abbreviations apply.

DM	Domain Manager
FFS	For Further Study
IP	Internet Protocol
LTE	Long Term Evolution
MME	Mobile Management Entity
SAE	System Architecture Evolution
UMTS	Universal Mobile Telecommunications System

4 Study of LTE and SAE Management

4.1 Requirements

4.1.1 Evolution of existing SA5 specifications

4.1.1.1 Justification

A reuse of the existing UMTS management standard solutions will have the following benefits:

- It is proven in operation;
- It will minimise both the standardisation and product development efforts (i.e. the cost and time);
- It provides a base for on which more functionality can be developed (compared with making everything new from the start);
- It will shorten the time to market for LTE and SAE systems;
- It will facilitate a seamless coexistence with UMTS management systems.

4.1.1.2 Requirement Statements

High level specifcations, like 32.101 [8], 32.102 [9] and 32.300 [10] shall be reused. Small modifications will need to be done in some cases.

The Methodology specificaitons shall be reused.

Interface IRPs shall be reused. Small modifications will need to be done in some cases.

State Management IRP shall be reused.

Security, Trace, SuM (that is not interface IRPs) TSes shall be reused. Small modifications will need to be done in some cases.

The NRM for Subscription Management, Generic Resources, Inventory Management Repeater, IMS shall be reused.

See Annex A for the exact list of specificaitons.

4.1.2 Automatic installation of NEs

4.1.2.1 Justification

Auto-configuration of eNodeBs requires cooperation between LTE DM and SAE DM. In particular, LTE DM needs to help the eNodeBs with their initial communication to their corresponding Mobile Management Entity, MME, or MME pools.

A newly installed eNodeB communicates with the LTE DM in several stages. At the initial stage, the eNodeB will need the address of the MME in pool. This information natively resides in the SAE DM, but not in the LTE DM. The addresses or MME pool IP addresses from the SAE DM to the LTE DM.

4.1.2.2 Requirement Statements

1) Reuse the Itf-P2P interface [2] as a foundation for the communication between LTE DM and SAE DM.

2) Devise a data format for structuring the addresses of MMEs. The detail modelling of this data will depend on the LTE Network Resource Model, which is FFS.

3) Define a method for transferring the addresses from SAE DM to LTE DM. Details FFS:

   a) Define when data can be transferred.

   b) Define which node (LTE DM or SAE DM) who takes the initiative.

   c) Define the semantics of updating the address structure in the LTE DM.

   d) Define rules on how to add or remove MMEs from a particular eNodeB. Rules are necessary as, for example, removing a MME from an eNodeB will have big impact on the already established connections between UE and MME. A special case is reparenting of an eNodeB.

4) While defining the NRM for SAE, make sure that the NRM contains elements that support automatic configuration of the S1 connection between eNodeBs and their corresponding MMEs. Especially, the object representing an MME should include an attribute that contains the address of its S1 interface.

5) Reuse Itf-N for the communication between the NMS and the SAE DM.

6) While defining the NRM for LTE, make sure that the NRM contains elements necessary to support automatic configuration of the S1 connection between eNodeBs and their corresponding MMEs.

4.1.3 Self organising network

4.1.3.1 Justification

Generic Use case Optimisation:

The following text is an example of how an optimisation can be done in a mobile network. It can be applied to specific use cases (as Use Case 2 and 7).

Scenario description: Optimisation of a certain parameter

- Objective: Description of procedures to optimise a certain parameter
- Scheduling: triggered either by network problems related to this parameter or on demand
- Input source (input optional depending on algorithm):
  - Dedicated Optimisation Nodes
  - Planning tool, with possible manual intervention and decision
  - EMS/NMS performance measurements (reflecting network status like KPI, measurements etc.)
  - EMS/NMS configuration data (reflecting network configuration)
  - Others …

- Functionality: Based on input parameter all necessary optimisation is processed:
  - With human interaction
  - Without human interaction based on pre-configured action reacting on certain triggers
  - Without human interaction based on autonomous intelligent actions by network
- Actions:
  - Network monitoring
  - Deriving optimised parameter
  - Configuration of optimised parameter
  - Network monitoring and checking success of re-configuration
- Expected results: optimisation procedures lead to better network quality (means performance, capacity and reliability) with minimised operational effort

Use case 1: Establishment of new eNodeB in network

A typical task for operational staff is the introduction of an eNodeB. In the following the scenario for introducing of a macro eNodeB is detailed considering already given definitions concerning self-configuration and self-optimisation functionality in chapter 6.21.1.

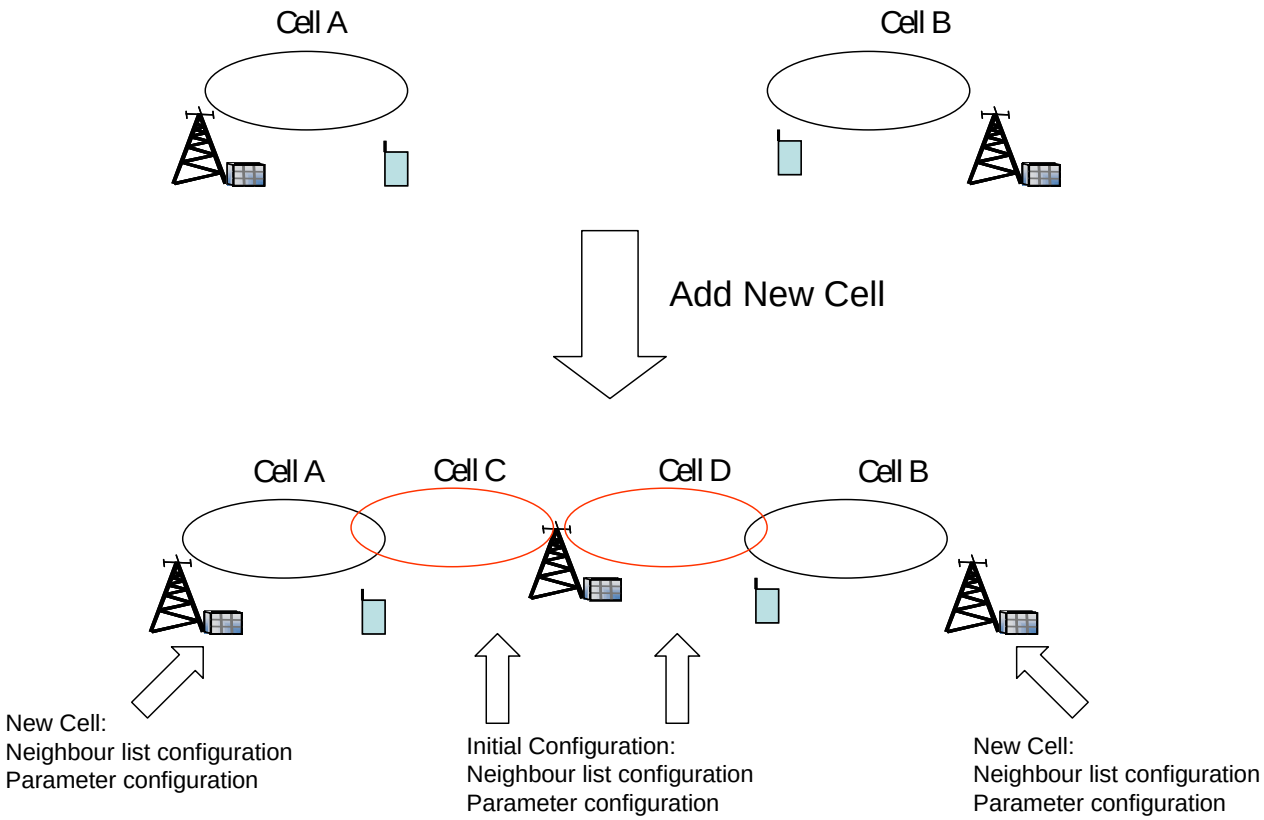

Figure 1: Establishment of new eNodeB and associated tasks

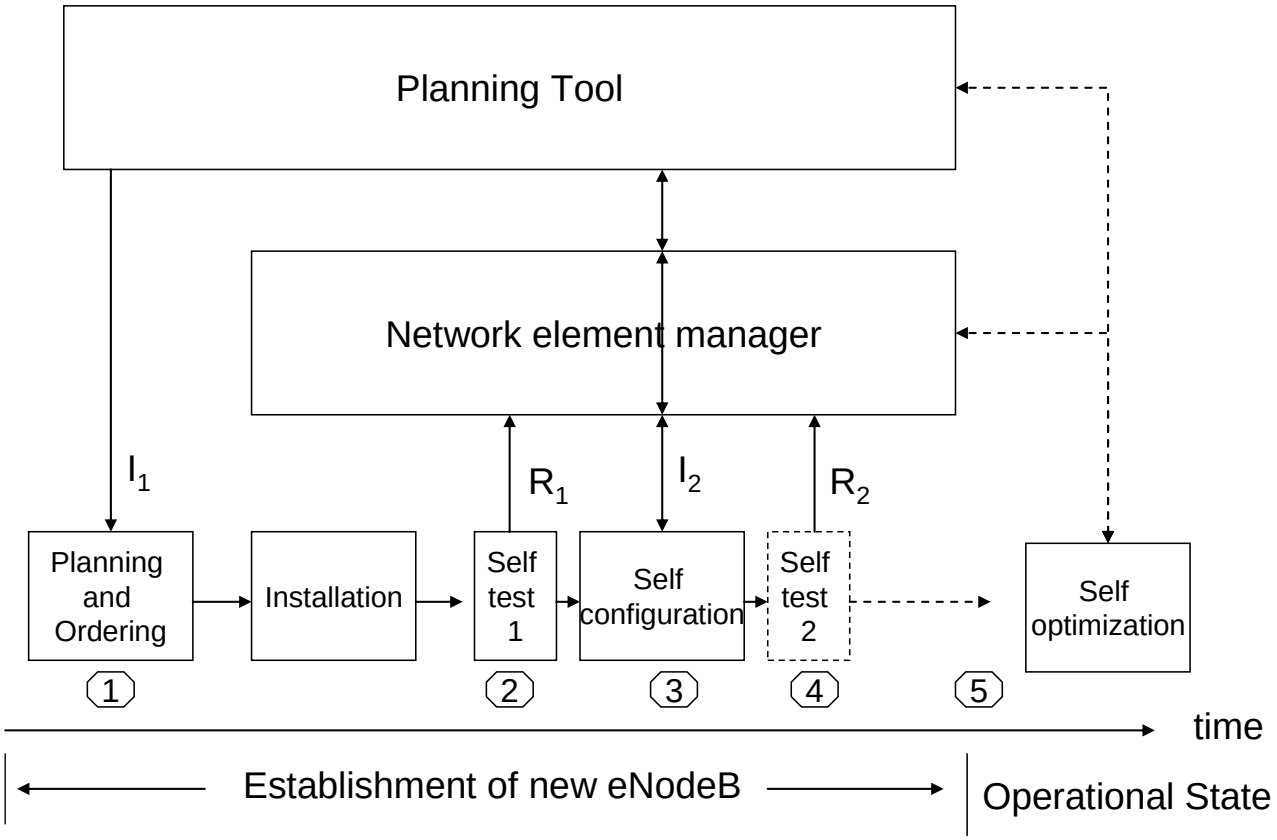

Figure 2: Logical procedure to establish new eNodeB (covering both use case 1 and 2). Actions 1 - 4 is representing use case 1.

1) The first step is obviously the planning of a new site based on coverage and capacity requirements. The process can be supported by measurements to indicate coverage or capacity problems in the network (see use case 3). A first initial set of parameters I_1 is: location, eNodeB type, antenna type, cell characteristics (sectors), required maximum capacity …

2) After the physical installation of the eNodeB a first initial self test will start with a possible report R1 in case of failure to the net element manager.

3) In the next step self configuration starts: The eNodeB requests its basic setup information (see figure in 6.21.1): including configuration of IP-address and detection of OAM, authentication of eNodeB, association of a GW, downloading of eNodeB software.
Then as a second part of the self configuration the initial radio configuration I_2 will be done: the following data might be provided via the network element manager from the planning tool or another self-configuration related instance:

- cell-id
- pilot sub-tones
- pilot power
- antenna tilt
- clustering information (e.g. location area, routing area)
- initial sub-tone information
- Neighbourhood list information: cell-ids, IP addresses…
- IP addresses of neighbourhood eNodeBs
- ….

In case any data are missing all parameter should be also derivable from a default value by an auto optimisation and it should be possible to send back this data to the element manager and planning tool.
At the end of the procedure it is necessary to inform the neighbour eNodeBs about the existence of the new eNodeB and to include the new cells in the corresponding neighbourhood list of the neighbouring eNodeBs and to set neighbour specific parameters in these cells.

4) An additional self test like for example a plausibility check of parameter with possible report R2 to the element manager could be done.

5) At the end of the installation the eNodeB is ready for commercial use and a test call can be done successfully.

Use Case 2: Optimisation of the neighbourhood list

Based on the assumed initial neighbour set a further optimisation of neighbour list (including 2G/3G) is needed considering e.g. radio measurements of eNodeBs and UEs or call events like call drops, handover problems etc.. For this approach RRC connections (calls, signalling procedures) and their accompanying measurements can be used to gather the needed information about neighbours. Known neighbours can be checked if they are really appropriate concerning real RF conditions, new ones can be included based on information about detected cells in UEs. Not forgotten must be the optimisation of parameters in neighbour eNodeB cells.

The following text is one example of neighbour cell list optimization.

Scenario description: Neighbour cell list optimisation

- Objective: Optimisation of neighbour cell list of self-configuration instance
- Scheduling: On demand or periodic
- Input information (all input optional depending on algorithm):
  - Location of the neighbours (distance),
  - UE measurement reporting or eNodeB radio scanning for neighbours,
  - Field strength information,
  - Event measurements like cell specific call drops or handover failures
  - NMS/EMS configuration data
  - Planning tool data
  - …
- Functionality: an algorithm selects the neighbours and/or optimises neighbour related parameterisation based on the input observation
- Actions:
  - Establish X2 interface towards neighbour eNodeB (if new)
  - Configuration of optimised neighbour related parameters in both eNodeBs (if any)
- Expected results: Optimised neighbour cells list and neighbour related parameter. This list and parameter can be sent to the management system for potential statistical collection, acknowledgement or correction.

Example (Informative description):
In operational phase, a further optimisation of neighbour list (including 2G/3G) can be done considering e.g. radio measurements of eNodeBs and UEs or call events like call drops, handover problems etc.. For this approach RRC connections (calls, signalling procedures) and their accompanying measurements can be used to gather the needed information about neighbours. Known neighbours can be checked if they are really appropriate concerning real RF conditions, new ones can be included based on information in UEs about detected cells.

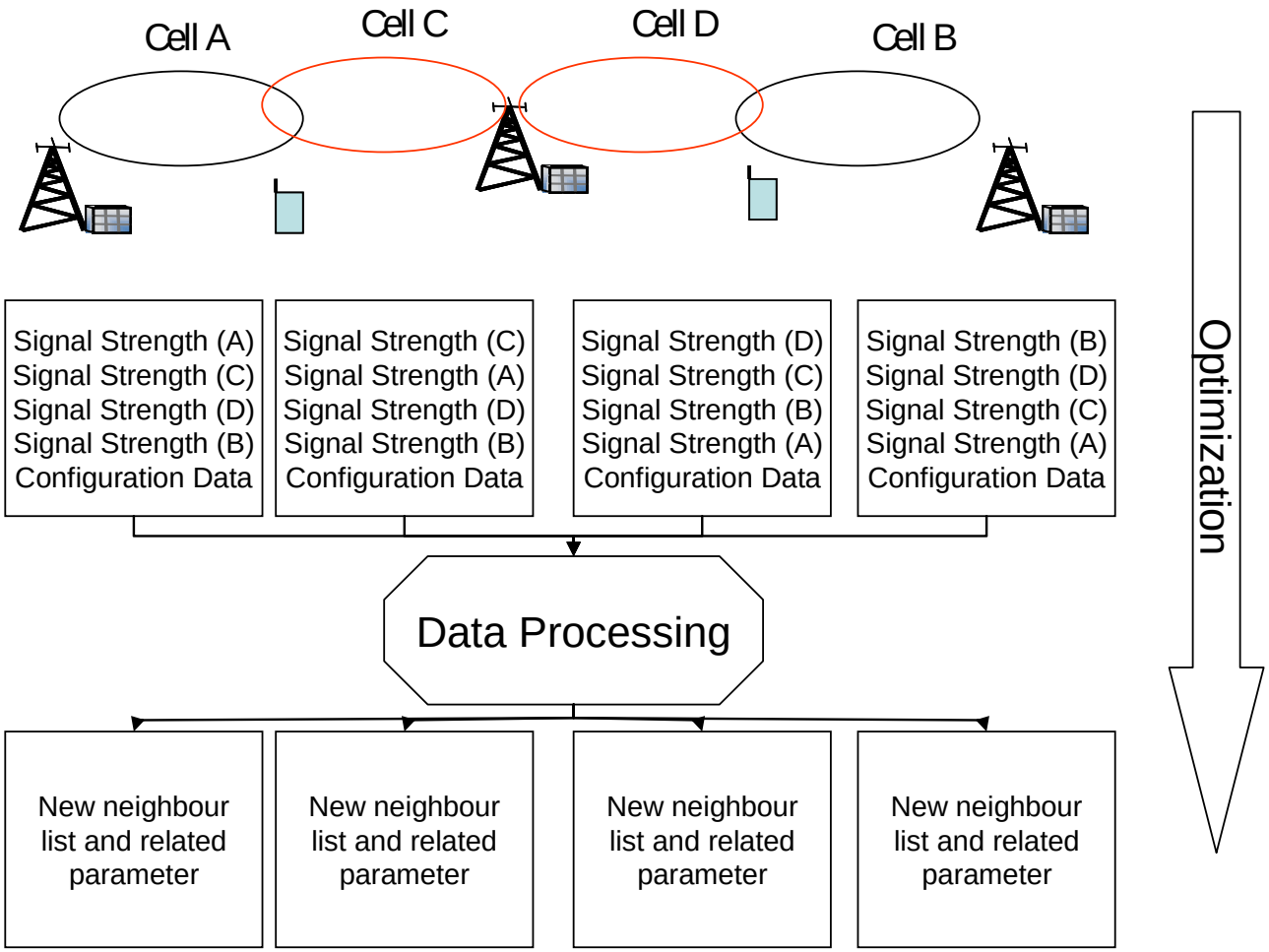

Figure 3: Optimisation of neighbour list and related cell parameters

Use Case 3: Coverage and capacity optimisation

A typical operational task is to optimise the network according to coverage and capacity. Planning tools support this task based on theoretical models but for both problems measurements must be derived in the network. Call drop rates give a first indication for areas with insufficient coverage, traffic counters identify capacity problems.
Following parameters are identified as possibly beneficial to be optimised:

- sub-tones (sub-tone sets planned for cell borders),
- antenna tilt,
- power settings,
- radio resource management parameters
- …

For a deeper analysis especially the detection of the locations of these areas detailed measurements are requested. Special tools to analyse RRM related measurements, interface tracing and drive tests are current solutions to gather this information to find optimal problem solutions.
In LTE appropriate measurements, the availability of significant statistical base of measurements, problem specific measurement configuration and the full support of processing this valuable information shall be supported by 3GPP Telecom Management specifications.

Editor's note: SA5 needs more clarification on sub-tones and is depending on other WGS on this issue.

Editor's note: It should be clarified how RRM measurements can contribute to statistics based optimisation cycle.

Use Case 4: Optimisation of parameter due to trouble shooting

In a typical workflow performance measurements indicate problems in the network caused by different reasons:

- high call drop rate
- poor Setup Success Rate
- poor average throughput
- many others

⇨

HW defects or
SW failures in the network,
user failures
wrong or not ideal parameterisation

Analyses of complex problems are based on drive test results, accompanied by interface traces. Typically signal strengths, Ec/No values of neighbours, special call events like call drop, handover failures etc. are valuable indications both for optimisation and trouble shooting purpose. In special cases even cell and neighbour individual parameterisation must be found to mitigate problems. Obviously network quality and performance could be improved if such individual optimisation could be done by default for every cell. Further typical configuration failures would be found (if not already avoided by intelligent self-configuration function) like missing or lost neighbours, inappropriate hysteresis values, 2G- and 3G-neighbour related parameter and others.
Generally the optimisation of multiple parameters in a wider network area must be supported by appropriate O&M functionality: the efficient transport of information about status of network elements, their configuration and a smart design to implement self-organising functionality must be a self-evident feature of a LTE system.

Use Case 5: Continuous optimisation due to dynamic changes in the network (like traffic variation)

Dynamic resource shifting and optimisation leads to better resource utilisation and cost effectiveness considering roaming of customer due to their daily activities. An example: during the day traffic is concentrated more in urban areas but at night there is a shift towards the suburban areas.

In OFDM the opportunity exists to distribute air interface resources in a dynamic way to optimise on traffic situation or interference situation. Based on statistical measurements of power and interference level for single sub-channels the coordination of sub-channels and dedicated power could be done in a dynamic way.

Other parameters beside sub-tones seen as beneficial in this area are principally antenna parameters, power settings and radio resource management parameters.

Editor's note: The time granularity of this dynamic procedure can be on a real-time or an off-line basis and must be discussed.

Use Case 6: Self-configuration and self-optimisation in multiple vendor environment FFS

It must be underlined that self-configuration and self-optimisation shall be supported in a multiple vendor environment so that standardised procedures and O&M interfaces are needed to avoid cost-intensive mediation between different vendor nodes and side effects due to different detail solutions (e.g. different optimisation algorithm leads to ping-pong effects and swinging phenomena). Main procedures like handover or sub-tone coordination must be discussed to be standardised to minimise such problems.

Use case 7: Handover Optimisation:

Note: the use case is based on experiences in GSM/UMTS and so only the principles for LTE can be presented due to missing details on handover procedure in LTE.

Scenario description: Optimisation of handover parameter like HO neighbour list, neighbour specific thresholds, margins and hysteretic parameter

- Objective: Description of procedures to optimise a certain HO parameter
- Scheduling: triggered either by network problems related to this parameter or on demand

- Input source (input optional depending on algorithm):
  - HO trigger reasons
  - KPIs: cell and neighbour specific HO success/failure rate, cell and neighbour specific Path Loss, Received signal strength and interference measurements before HO events
  - In ideal: all measurements can be linked with correct location information
  - Planning data like maps, location of cells, theoretical path loss/interference
  - Drive test results in proprietary/standardised form
  - Traces of interfaces (like Abis, Iub, Iu, A)

- Functionality: Based on input parameter all necessary optimisation is processed:
  - With human interaction: analysis of drive tests, traces
  - Without human interaction based on pre-configured action reacting on certain triggers: if certain average measurement values fall below certain threshold default configuration patterns can be set
  - Without human interaction based on autonomous intelligent actions by network: network finds optimal configuration based on complex procedures
- Actions:
  - Network monitoring
  - Deriving optimised parameter
  - Configuration of optimised parameter
  - Network monitoring and checking success of re-configuration
- Expected results: optimisation procedures lead to higher HO success rate for certain cell-cell neighbour couple with minimised operational effort

4.1.3.2 Requirement Statements

4.1.4 Trace in LTE/SAE

4.1.4.1 Justification

The need for trace functionality is the same as for a UMTS system (non LTE/SAE). Scenarios are described in TS 32.421 [2].

4.1.4.2 Requirement Statements

To minimise the specifcation work for the trace functionality of LTE/SAE:

1) Reuse Subscriber and Equipment Trace for LTE and SAE (32.421 [2], 32.422 [3] and 32.423 [4]).

   The following general updates are required:

   - lists of systems need to be completed with LTE and SAE, where applicable.

   - lists of network elements need to be completed with network elements in LTE and SAE, where applicable.

- lists of interfaces need to be completed with interfaces in LTE and SAE, where applicable.

2) Reuse Trace IRP for LTE and SAE (32.441 [5], 32.442 [6] and 32.443 [7]).

The following general updates are required:

- lists of systems need to be completed with LTE and SAE, where applicable.

- lists of network elements need to be completed with network elements in LTE and SAE, where applicable.

- lists of interfaces need to be completed with interfaces in LTE and SAE, where applicable.

3) Do trace parameter propagation over X2 interface (in 32.421 [2] and 32.422 [3]) at handover. At handover between AGW pools (where there is no X2 interface), use the same route as the actual handover signalling for trace parameter propagation.

To find faults in the air interface signalling, it would be beneficial to include trace of the air interface as well.

4) Extend trace to also include air interface (RRC) signalling (in 32.421 [2] and 32.422 [3]).

The trace should start as early as possible. It should be started earlier than it is started for UMTS.

5) Include the information in CN INVOKE TRACE (adapted for LTE/SAE) in the "call set up message" from SAE to LTE and within SAE.

It should be possible to initiate the trace in one DM and forward the initiation over the Itf-P2P (in order to facilitate Signalling Based Activation from a radio network DM).

6) Allow forwarding of trace initiation over the Itf-P2P between DMs.

All trace log data from different nodes and/or DMs should be possible to collect and analyse at a selected location.

7) Include IP address for trace log data to be sent to in the trace initiation.

4.1.5 KPIs in LTE/SAE

The following guidelines and principles shall be valid for the LTE KPIs specified in SA5:

a. Measure properties that the operator can control by means of dimensioning and optimisation

b. Measure properties that are of economical value for the operator to improve

c. Focus for the KPIs shall be on End-to-End (E2E) performance and End User Perceived Service performance:

   - E2E Service Performance is the combined performance of the network nodes involved in the service delivery and the terminal/terminal equipment.

   - End User Perceived Service Performance is how the user of the service perceives the service including the performance of the used terminal.

d. The KPIs shall be well described, including a clear rationale,.

KPIs should, when possible, be specified independently from the underlying technology (e.g. WCDMA).

Editors' note:

How to describe the KPIs is FFS.

Two options:

1 Whenever possible the underlying measurements (counters) or formulas should be described in detail.

2 Specify the underlying measurements (counters) or formulas in detail are optional (the original proposal was: It should not be required to specify the underlying measurements (counters) or formulas in detail).

4.1.6 Site Management

4.1.6.1 Justification

Observing the evolution of network infrastructure, it is evident that site (i.e. all the equipment and their links at the site) management is getting complex. Operators foresee substantial OPEX reduction if site resources such as power, floor space and antenna systems can be efficiently managed for sharing by say GSM BTS, WCDMA RBS, transmission equipment etc. This view necessitates the modelling of site resources as a subsystem or system.

4.1.6.2 Requirement Statements

4.1.7 Fault Management of LTE/SAE

4.1.7.1 Justification

Exchange of fault data over the Itf-P2P has not yet been described in 3GPP. It is proposed to investigate also here potential benefits in terms of automation of operational tasks and self-healing mechanisms.

4.1.7.2 Requirement Statements

4.1.8 Configuration Management of LTE/SAE

4.1.8.1 Justification

General

The consistent management of handover relationships over different element managers is a tedious task. The Itf-P2P can help in automating these processes. Possible functions include

- *Cell data synchronisation*: The attributes of external cell objects and the corresponding (master) cell object have to be consistent. Functions on the Itf-P2P can help to configure the attributes consistently and to detect and correct inconsistencies.
- *Detection of unidirectional handovers*: Most handover relationships are bidirectional. Unidirectional handovers may be due to erroneous configurations. Functions on the Itf-P2P can help to detect unidirectional handovers and to configure the missing handover direction.

Pool Management

Each eNodeB may be connected to multiple “SAE NODE”. The SAE NODEs may be grouped in pool called “SAE NODE Pool” as shown below. The two dotted lines illustrate the idea that some eNodeB can access members of one Pool while other eNodeBs can access members of another Pool. The NRM IRP should support such scenario.

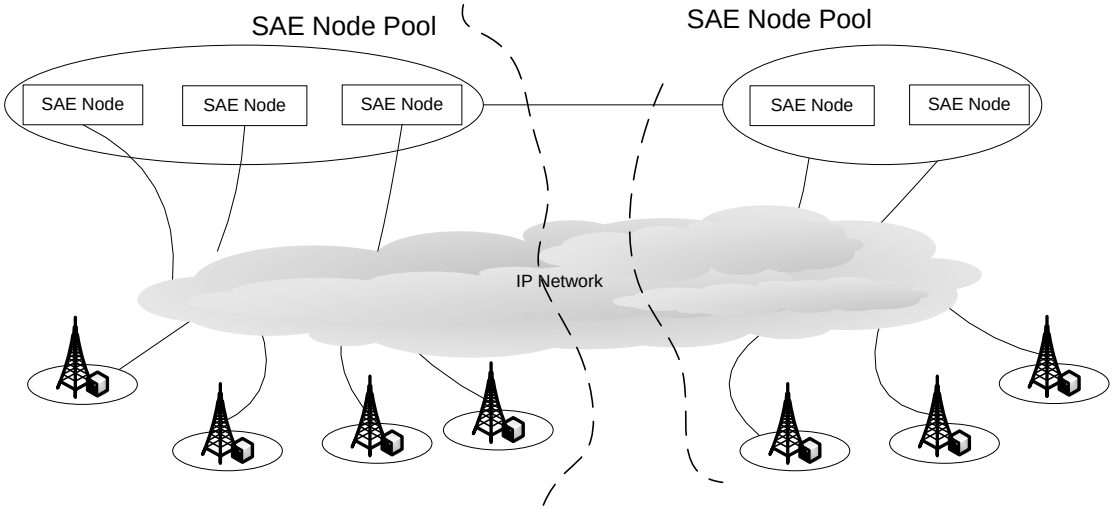

Figure 1: SAE NODE Pool

The eNodeB, operated by one operator can also be connected to SAE NODEs operated by multiple (different) operators. These operators can organize their SAE NODEs pools as well. The NRM IRP should also model such scenario.

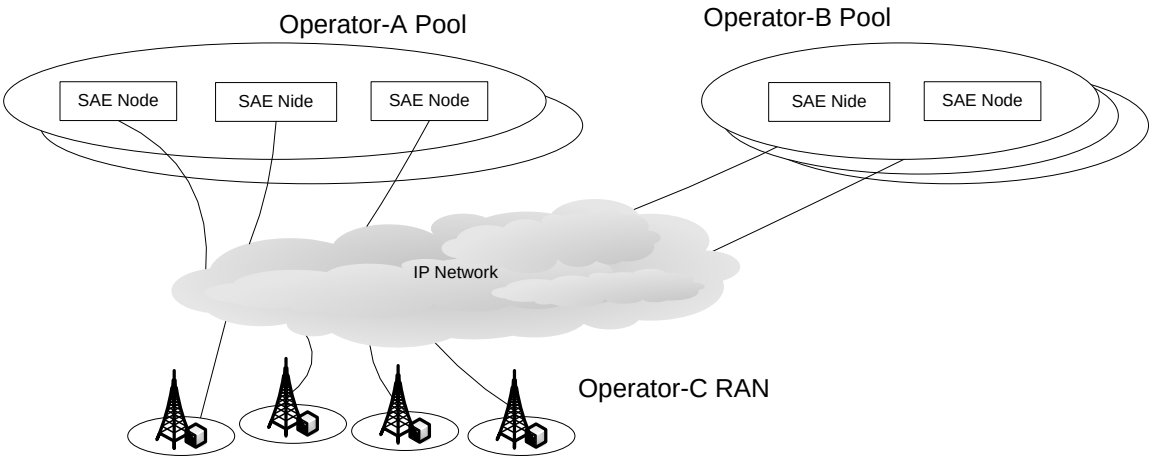

Figure 2: SAE NODE Pools in Multi CN operators scenario

In addition to support the modelling of “SAE Node pool”, the NRM IRP specification should also support the modelling of the “MSC pool' and the ”SGSN pool” scenarios, using identical principle.

4.1.8.2 Requirement Statements

4.1.9 Performance Management of LTE/SAE

4.1.9.1 Justification

Exchange of performance data over the Itf-P2P has not yet been described in 3GPP. It is proposed to investigate also here potential benefits in terms of automation of operational tasks and self-healing mechanisms.

4.1.9.2 Requirement Statements

4.2 Management architecture for LTE and SAE

This section will include an overview of the Telecom Management Architecture Reference Model for LTE. This should be based on an evolution of the current Architecture i.e. as illustrated in the following figure:

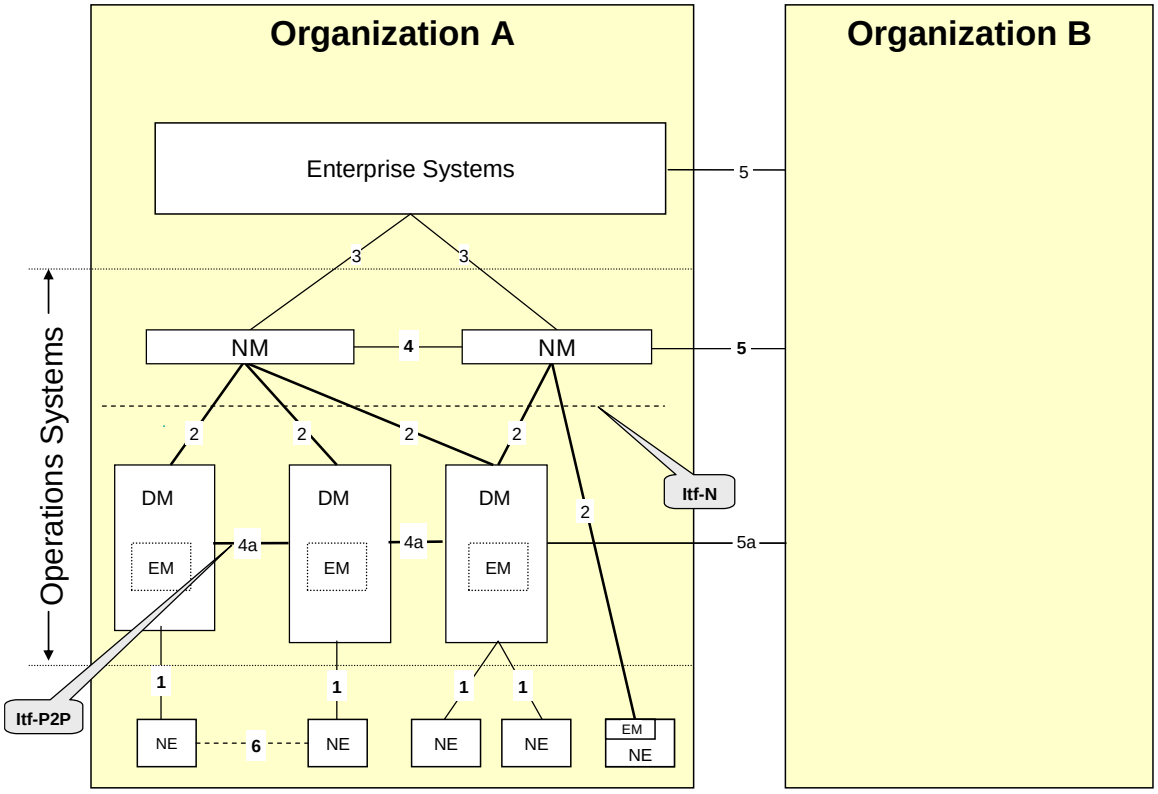

4.2.1 Reuse of existing 3GPP management architecture

4.2.2 Possible extensions

5 Conclusions and recommendations

Annex A :
Reuse of 3GPP TSs for LTE and SAE management

A.1 TSs to be reused

The following TSs shall be reused for LTE:

TS 32.101	Telecommunication management; Principles and high level requirements
TS 32.102	Telecommunication management; Architecture
TS 32.111-1	Telecommunication management; Fault Management; Part 1: 3G fault management requirements
TS 32.111-2	Telecommunication management; Fault Management; Part 2: Alarm Integration Reference Point (IRP): Information Service (IS)
TS 32.111-3	Telecommunication management; Fault Management; Part 3: Alarm Integration Reference Point (IRP): Common Object Request Broker Architecture (CORBA) Solution Set (SS)
TS 32.111-5	Telecommunication management; Fault Management; Part 5: Alarm Integration Reference Point (IRP): eXtensible Markup Language (XML) definitions
TS 32.140	Telecommunication management; Subscription Management (SuM) requirements
TS 32.141	Telecommunication management; Subscription Management (SuM) architecture
TS 32.150	Telecommunication management; Integration Reference Point (IRP) Concept and definitions
TS 32.151	Telecommunication management; Integration Reference Point (IRP) Information Service (IS) template
TS 32.152	Telecommunication management; Integration Reference Point (IRP) Information Service (IS) Unified Modelling Language (UML) repertoire
TS 32.153	Telecommunication management; Integration Reference Point (IRP) technology specific templates
TS 32.154	Telecommunication management; Backward and Forward Compatibility (BFC); Concept and definitions
TS 32.171	Telecommunication management; Subscription Management (SuM) Network Resource Model (NRM) Integration Reference Point (IRP): Requirements
TS 32.172	Telecommunication management; Subscription Management (SuM) Network Resource Model (NRM) Integration Reference Point (IRP): Information Service (IS)
TS 32.175	Telecommunication management; Subscription Management (SuM) Network Resource Model (NRM) Integration Reference Point (IRP): eXtensible Markup Language (XML) definition
TS 32.300	Telecommunication management; Configuration Management (CM); Name convention for Managed Objects
TS 32.301	Telecommunication management; Configuration Management (CM); Notification Integration Reference Point (IRP): Requirements
TS 32.302	Telecommunication management; Configuration Management (CM); Notification Integration Reference Point (IRP): Information Service (IS)
TS 32.303	Telecommunication management; Configuration Management (CM); Notification Integration Reference Point (IRP): Common Object Request Broker Architecture (CORBA) Solution Set (SS)
TS 32.305	Telecommunication management; Configuration Management (CM); Notification Integration Reference Point (IRP): eXtensible Markup Language (XML) definition
TS 32.307	Telecommunication management; Configuration Management (CM); Notification Integration Reference Point (IRP): Simple Object Access Protocol (SOAP) Solution Set (SS)
TS 32.311	Telecommunication management; Generic Integration Reference Point (IRP) management; Requirements
TS 32.312	Telecommunication management; Generic Integration Reference Point (IRP) management; Information Service (IS)
TS 32.313	Telecommunication management; Generic Integration Reference Point (IRP) management; Common Object Request Broker Architecture (CORBA) Solution Set (SS)
TS 32.317	Telecommunication management; Generic Integration Reference Point (IRP) management; Simple Object Access Protocol (SOAP) Solution Set (SS)
TS 32.321	Telecommunication management; Test management Integration Reference Point (IRP): Requirements
TS 32.322	Telecommunication management; Test management Integration Reference Point (IRP): Information Service (IS)
TS 32.323	Telecommunication management; Test management Integration Reference Point (IRP): Common Object Request Broker Architecture (CORBA) Solution Set (SS)
TS 32.325	Telecommunication management; Test management Integration Reference Point (IRP); eXtensible Markup Language (XML) definitions
TS 32.331	Telecommunication management; Notification Log (NL) Integration Reference Point (IRP): Requirements

TS 32.332	Telecommunication management; Notification Log (NL) Integration Reference Point (IRP): Information Service (IS)
TS 32.333	Telecommunication management; Notification Log (NL) Integration Reference Point (IRP): Common Object Request Broker Architecture (CORBA) Solution Set (SS)
TS 32.335	Telecommunication management; Notification Log (NL) Integration Reference Point (IRP): eXtensible Markup Language (XML) solution definitions
TS 32.341	Telecommunication management; File Transfer (FT) Integration Reference Point (IRP): Requirements
TS 32.342	Telecommunication management; File Transfer (FT) Integration Reference Point (IRP): Information Service (IS)
TS 32.343	Telecommunication management; File Transfer (FT) Integration Reference Point (IRP): Common Object Request Broker Architecture (CORBA) Solution Set (SS)
TS 32.345	Telecommunication management; File Transfer (FT) Integration Reference Point (IRP); eXtensible Markup Language (XML) definitions
TS 32.351	Telecommunication management; Communication Surveillance (CS) Integration Reference Point (IRP): Requirements
TS 32.352	Telecommunication management; Communication Surveillance (CS) Integration Reference Point (IRP): Information Service (IS)
TS 32.353	Telecommunication management; Communication Surveillance (CS) Integration Reference Point (IRP): Common Object Request Broker Architecture (CORBA) Solution Set (SS)
TS 32.361	Telecommunication management; Entry Point (EP) Integration Reference Point (IRP): Requirements
TS 32.362	Telecommunication management; Entry Point (EP) Integration Reference Point (IRP): Information Service (IS)
TS 32.363	Telecommunication management; Entry Point (EP) Integration Reference Point (IRP): Common Object Request Broker Architecture (CORBA) Solution Set (SS)
TS 32.365	Telecommunication management; Entry Point (EP) Integration Reference Point (IRP); eXtensible Markup Language (XML) definitions
TS 32.371	Telecommunication management; Security Management concept and requirements
TS 32.372	Telecommunication management; Security services for Integration Reference Point (IRP): Information Service (IS)
TS 32.373	Telecommunication management; Security services for Integration Reference Point (IRP): Common Object Request Broker Architecture (CORBA) Solution Set (SS)
TS 32.375	Telecommunication management; Security services for Integration Reference Point (IRP): File integrity solution
TS 32.381	Telecommunication management; Partial Suspension of Itf-N Integration Reference Point (IRP): Requirements
TS 32.382	Telecommunication management; Partial Suspension of Itf-N Integration Reference Point (IRP): Information Service (IS)
TS 32.383	Telecommunication management; Security Services for Integration Reference Points (IRP): Common Object Request Broker Architecture (CORBA) Solution Set (SS)
TS 32.391	Telecommunication management; Delta synchronization Integration Reference Point (IRP): Requirements
TS 32.392	Telecommunication management; Delta synchronization Integration Reference Point (IRP): Information Service (IS)
TS 32.393	Telecommunication management; Delta synchronization Integration Reference Point (IRP): Common Object Request Broker Architecture (CORBA) Solution Set (SS)
TS 32.395	Telecommunication management; Delta synchronization Integration Reference Point (IRP): eXtensible Markup Language (XML) file format definition
TS 32.401	Telecommunication management; Performance Management (PM); Concept and requirements
TS 32.404	Performance Management (PM); Performance measurements - Definitions and template
TS 32.408	Performance Management (PM); Performance measurements Teleservice
TS 32.409	Performance Management (PM); Performance measurements IP Multimedia Subsystem (IMS)
TS 32.411	Telecommunication management; Performance Management (PM) Integration Reference Point (IRP): Requirements
TS 32.412	Telecommunication management; Performance Management (PM) Integration Reference Point (IRP): Information Service (IS)
TS 32.413	Telecommunication management; Performance Management (PM) Integration Reference Point (IRP): Common Object Request Broker Architecture (CORBA) Solution Set (SS)
TS 32.415	Telecommunication management; Performance Management (PM) Integration Reference Point (IRP); eXtensible Markup Language (XML) definitions
TS 32.421	Telecommunication management; Subscriber and equipment trace; Trace concepts and requirements
TS 32.422	Telecommunication management; Subscriber and equipment trace; Trace control and configuration management
TS 32.423	Telecommunication management; Subscriber and equipment trace; Trace data definition and management
TS 32.432	Telecommunication management; Performance measurement: File format definition
TS 32.435	Telecommunication management; Performance measurement: eXtensible Markup Language (XML) file format definition
TS 32.436	Telecommunication management; Performance measurement: Abstract Syntax Notation 1 (ASN.1) file format definition
TS 32.441	Telecommunication management; Trace Management Integration Reference Point (IRP): Requirements
TS 32.442	Telecommunication management; Trace Management Integration Reference Point (IRP): Information service (IS)

TS 32.443	Telecommunication management; Trace Management Integration Reference Point (IRP): Common Object Request Broker Architecture (CORBA) Solution Set (SS)
TS 32.600	Telecommunication management; Configuration Management (CM); Concept and high-level requirements
TS 32.601	Telecommunication management; Configuration Management (CM); Basic CM Integration Reference Point (IRP); Requirements
TS 32.602	Telecommunication management; Configuration Management (CM); Basic CM Integration Reference Point (IRP): Information Service (IS)
TS 32.603	Telecommunication management; Configuration Management (CM); Basic CM Integration Reference Point (IRP): Common Object Request Broker Architecture (CORBA) Solution Set (SS)
TS 32.607	Telecommunication management; Configuration Management (CM); Basic CM Integration Reference Point (IRP): Simple Object Access Protocol (SOAP) Solution Set (SS)
TS 32.611	Telecommunication management; Configuration Management (CM); Bulk CM Integration Reference Point (IRP): Requirements
TS 32.612	Telecommunication management; Configuration Management (CM); Bulk CM Integration Reference Point (IRP): Information Service (IS)
TS 32.613	Telecommunication management; Configuration Management (CM); Bulk CM Integration Reference Point (IRP): Common Object Request Broker Architecture (CORBA) Solution Set (SS)
TS 32.615	Telecommunication management; Configuration Management (CM); Bulk CM Integration Reference Point (IRP): eXtensible Markup Language (XML) file format definition
TS 32.621	Telecommunication management; Configuration Management (CM); Generic network resources Integration Reference Point (IRP); Requirements
TS 32.622	Telecommunication management; Configuration Management (CM); Generic network resources Integration Reference Point (IRP): Network Resource Model (NRM)
TS 32.623	Telecommunication management; Configuration Management (CM); Generic network resources Integration Reference Point (IRP): Common Object Request Broker Architecture (CORBA) Solution Set (SS)
TS 32.625	Telecommunication management; Configuration Management (CM); Generic network resources Integration Reference Point (IRP): Bulk CM eXtensible Markup Language (XML) file format definition
TS 32.661	Telecommunication management; Configuration Management (CM); Kernel CM; Requirements
TS 32.662	Telecommunication management; Configuration Management (CM); Kernel CM; Information service (IS)
TS 32.663	Telecommunication management; Configuration Management (CM); Kernel CM Integration Reference Point (IRP): Common Object Request Broker Architecture (CORBA) Solution Set (SS)
TS 32.664	Telecommunication management; Configuration Management (CM); Kernel CM Integration Reference Point (IRP): Common Management Information Protocol (CMIP) Solution Set (SS)
TS 32.665	Telecommunication management; Configuration Management (CM); Kernel CM Integration Reference Point (IRP): eXtensible Markup Language (XML) definitions
TS 32.667	Telecommunication management; Configuration Management (CM); Kernel CM Integration Reference Point (IRP): Simple Object Access Protocol (SOAP) Solution Set (SS)
TS 32.671	Telecommunication management; Configuration Management (CM); State Management Integration Reference Point (IRP): Requirements
TS 32.672	Telecommunication management; Configuration Management (CM); State Management Integration Reference Point (IRP): Information Service (IS)
TS 32.673	Telecommunication management; Configuration Management (CM); State Management Integration Reference Point (IRP): Common Object Request Broker Architecture (CORBA) Solution Set (SS)
TS 32.674	Telecommunication management; Configuration Management (CM); State Management Integration Reference Point (IRP): Common Management Information Protocol (CMIP) Solution Set (SS)
TS 32.675	Telecommunication management; Configuration Management (CM); State Management Integration Reference Point (IRP): Bulk CM eXtensible Markup Language (XML) file format definition
TS 32.681	Telecommunication management; Inventory Management (IM) Integration Reference Point (IRP): Requirements
TS 32.682	Telecommunication management; Inventory Management (IM) Integration Reference Point (IRP); Information Service (IS)
TS 32.683	Telecommunication management; Inventory Management (IM) Integration Reference Point (IRP): Common Object Request Broker Architecture (CORBA) Solution Set (SS)
TS 32.690	Telecommunication management; Inventory Management (IM): Requirements
TS 32.691	Telecommunication management; Inventory Management (IM) network resources Integration Reference Point (IRP): Requirements
TS 32.692	Telecommunication management; Inventory Management (IM) network resources Integration Reference Point (IRP): Network Resource Model (NRM)
TS 32.695	Telecommunication management; Inventory Management (IM) network resources Integration Reference Point (IRP): Bulk Configuration Management (CM) eXtensible Markup Language (XML) file format definition
TS 32.721	Telecommunication management; Configuration Management (CM); Repeater network resources Integration Reference Point (IRP): Requirements

TS 32.722	Telecommunication management; Configuration Management (CM); Repeater network resources Integration Reference Point (IRP): Information Service (IS)
TS 32.723	Telecommunication management; Configuration Management (CM); Repeater network resources Integration Reference Point (IRP): Common Object Request Broker Architecture (CORBA) Solution Set (SS)
TS 32.725	Telecommunication management; Configuration Management (CM); Repeater network resources Integration Reference Point (IRP): Bulk CM eXtensible Markup Language (XML) file format definition
TS 32.731	Telecommunication management; Service Specific Core Network (CN) IP Multimedia Subsystem (IMS) Network Resource Model (NRM) Integration Reference Point (IRP): Requirements
TS 32.732	Telecommunication management; Service Specific Core Network (CN) IP Multimedia Subsystem (IMS) Network Resource Model (NRM) Integration Reference Point (IRP): Information Service (IS)
TS 32.733	Telecommunication management; Service Specific Core Network (CN) IP Multimedia Subsystem (IMS) Network Resource Model (NRM) Integration Reference Point (IRP): Common Object Request Broker Architecture (CORBA) Solution Set (SS)
TS 32.735	Telecommunication management; Service Specific Core Network (CN) IP Multimedia Subsystem (IMS) Network Resource Model (NRM) Integration Reference Point (IRP): eXtensible Markup Language (XML) file format definition

Annex B :
Change history

Change history								
Date	**TSG #**	**TSG Doc.**	**CR**	**Rev**	**Subject/Comment**	**Cat**	**Old**	**New**
May 2007	SA_36	SP-070303	--	--	Submitted to SA#36 for Information	--	1.0.0	