3GPP TS 36.300 V8.9.0 (2009-06)

Technical Specification

3rd Generation Partnership Project; Technical Specification Group Radio Access Network; Evolved Universal Terrestrial Radio Access (E-UTRA) and Evolved Universal Terrestrial Radio Access Network (E-UTRAN); Overall description; Stage 2 (Release 8)

The present document has been developed within the 3rd Generation Partnership Project (3GPP TM) and may be further elaborated for the purposes of 3GPP.
The present document has not been subject to any approval process by the 3GPP Organizational Partners and shall not be implemented.
This Specification is provided for future development work within 3GPP only. The Organizational Partners accept no liability for any use of this Specification.
Specifications and reports for implementation of the 3GPP TM system should be obtained via the 3GPP Organizational Partners' Publications Offices.

KONINKLIJKE KPN N.V.
EXHIBIT 2003

Keywords

UMTS, stage 2, radio, architecture

3GPP

Postal address

3GPP support office address

650 Route des Lucioles - Sophia Antipolis
Valbonne - FRANCE
Tel.: +33 4 92 94 42 00 Fax: +33 4 93 65 47 16

Internet

http://www.3gpp.org

Copyright Notification

No part may be reproduced except as authorized by written permission.
The copyright and the foregoing restriction extend to reproduction in all media.

© 2009, 3GPP Organizational Partners (ARIB, ATIS, CCSA, ETSI, TTA, TTC).
All rights reserved.

UMTS™ is a Trade Mark of ETSI registered for the benefit of its members
3GPP™ is a Trade Mark of ETSI registered for the benefit of its Members and of the 3GPP Organizational Partners
LTE™ is a Trade Mark of ETSI currently being registered for the benefit of its Members and of the 3GPP Organizational Partners
GSM® and the GSM logo are registered and owned by the GSM Association

Contents

Foreword 10
1 Scope 11
2 References 11
3 Definitions, symbols and abbreviations 12
3.1 Definitions 12
3.2 Abbreviations 12
4 Overall architecture 15
4.1 Functional Split 16
4.2 Interfaces 18
4.2.1 S1 Interface 18
4.2.2 X2 Interface 18
4.3 Radio Protocol architecture 18
4.3.1 User plane 18
4.3.2 Control plane 18
4.4 Synchronization 19
4.5 IP fragmentation 19
4.6 Support of HeNBs 19
4.6.1 Architecture 19
4.6.2 Functional Split 21
4.6.3 Interfaces 22
4.6.3.1 Protocol Stack for S1 User Plane 22
4.6.3.2 Protocol Stacks for S1 Control Plane 22
5 Physical Layer for E-UTRA 23
5.1 Downlink Transmission Scheme 25
5.1.1 Basic transmission scheme based on OFDM 25
5.1.2 Physical-layer processing 25
5.1.3 Physical downlink control channel 26
5.1.4 Downlink Reference signal 26
5.1.5 Downlink multi-antenna transmission 26
5.1.6 MBSFN transmission 27
5.1.7 Physical layer procedure 27
5.1.7.1 Link adaptation 27
5.1.7.2 Power Control 27
5.1.7.3 Cell search 27
5.1.8 Physical layer measurements definition 27
5.2 Uplink Transmission Scheme 28
5.2.1 Basic transmission scheme 28
5.2.2 Physical-layer processing 28
5.2.3 Physical uplink control channel 28
5.2.4 Uplink Reference signal 29
5.2.5 Random access preamble 29
5.2.6 Uplink multi-antenna transmission 29
5.2.7 Physical channel procedure 29
5.2.7.1 Link adaptation 29
5.2.7.2 Uplink Power control 29
5.2.7.3 Uplink timing control 29
5.3 Transport Channels 30
5.3.1 Mapping between transport channels and physical channels 31
5.4 E-UTRA physical layer model 31
5.4.1 Void 31
5.4.2 Void 31
6 Layer 2 31
6.1 MAC Sublayer 33

6.1.1 Services and Functions ... 33
6.1.2 Logical Channels ... 33
6.1.2.1 Control Channels ... 34
6.1.2.2 Traffic Channels ... 34
6.1.3 Mapping between logical channels and transport channels ... 34
6.1.3.1 Mapping in Uplink ... 34
6.1.3.2 Mapping in Downlink ... 35
6.2 RLC Sublayer ... 36
6.2.1 Services and Functions ... 36
6.2.2 PDU Structure ... 36
6.3 PDCP Sublayer ... 37
6.3.1 Services and Functions ... 37
6.3.2 PDU Structure ... 37
6.4 Void ... 37

7 RRC ... 37
7.1 Services and Functions ... 38
7.2 RRC protocol states & state transitions ... 38
7.3 Transport of NAS messages ... 39
7.4 System Information ... 39
7.5 Void ... 40

8 E-UTRAN identities ... 40
8.1 E-UTRAN related UE identities ... 40
8.2 Network entity related Identities ... 40

9 ARQ and HARQ ... 41
9.1 HARQ principles ... 41
9.2 ARQ principles ... 42
9.3 Void ... 42

10 Mobility ... 42
10.1 Intra E-UTRAN ... 43
10.1.1 Mobility Management in ECM-IDLE ... 43
10.1.1.1 Cell selection ... 43
10.1.1.2 Cell reselection ... 43
10.1.1.3 Void ... 44
10.1.1.4 Void ... 44
10.1.1.5 Void ... 44
10.1.2 Mobility Management in ECM-CONNECTED ... 44
10.1.2.1 Handover ... 45
10.1.2.1.1 C-plane handling ... 45
10.1.2.1.2 U-plane handling ... 48
10.1.2.2 Path Switch ... 49
10.1.2.3 Data forwarding ... 49
10.1.2.3.1 For RLC-AM DRBs ... 49
10.1.2.3.2 For RLC-UM DRBs ... 50
10.1.2.3.3 SRB handling ... 50
10.1.2.4 Void ... 50
10.1.2.5 Void ... 50
10.1.2.6 Void ... 50
10.1.2.7 Timing Advance ... 50
10.1.3 Measurements ... 51
10.1.3.1 Intra-frequency neighbour (cell) measurements ... 52
10.1.3.2 Inter-frequency neighbour (cell) measurements ... 52
10.1.4 Paging and C-plane establishment ... 52
10.1.5 Random Access Procedure ... 52
10.1.5.1 Contention based random access procedure ... 53
10.1.5.2 Non-contention based random access procedure ... 55
10.1.5.3 Interaction model between L1 and L2/3 for Random Access Procedure ... 55
10.1.6 Radio Link Failure ... 56
10.1.7 Radio Access Network Sharing ... 57
10.1.8 Handling of Roaming and Area Restrictions for UEs in ECM-CONNECTED ... 57

10.2 Inter RAT ... 58
10.2.1 Cell reselection ... 58
10.2.2 Handover ... 58
10.2.2a Inter-RAT cell change order to GERAN with NACC ... 59
10.2.2b Inter-RAT handovers from E-UTRAN ... 59
10.2.2b.1 Data forwarding ... 59
10.2.2b.1.1 For RLC-AM bearers ... 59
10.2.2b.1.2 For RLC-UM bearers ... 60
10.2.3 Measurements ... 60
10.2.3.1 Inter-RAT handovers from E-UTRAN ... 60
10.2.3.2 Inter-RAT handovers to E-UTRAN ... 60
10.2.3.3 Inter-RAT cell reselection from E-UTRAN ... 60
10.2.3.4 Limiting measurement load at UE ... 60
10.2.4 Network Aspects ... 61
10.3 Mobility between E-UTRAN and Non-3GPP radio technologies ... 61
10.3.1 UE Capability Configuration ... 61
10.3.2 Mobility between E-UTRAN and cdma2000 network ... 61
10.3.2.1 Tunnelling of cdma2000 Messages over E-UTRAN between UE and cdma2000 Access Nodes ... 61
10.3.2.2 Mobility between E-UTRAN and HRPD ... 62
10.3.2.2.1 Mobility from E-UTRAN to HRPD ... 62
10.3.2.2.1.1 HRPD System Information Transmission in E-UTRAN ... 62
10.3.2.2.1.2 Measuring HRPD from E-UTRAN ... 62
10.3.2.2.1.2.1 Idle Mode Measurement Control ... 63
10.3.2.2.1.2.2 Active Mode Measurement Control ... 63
10.3.2.2.1.2.3 Active Mode Measurement ... 63
10.3.2.2.1.3 Pre-registration to HRPD Procedure ... 63
10.3.2.2.1.4 E-UTRAN to HRPD Cell Re-selection ... 63
10.3.2.2.1.5 E-UTRAN to HRPD Handover ... 63
10.3.2.2.2 Mobility from HRPD to E-UTRAN ... 64
10.3.2.3 Mobility between E-UTRAN and cdma2000 1xRTT ... 64
10.3.2.3.1 Mobility from E-UTRAN to cdma2000 1xRTT ... 64
10.3.2.3.1.1 cdma2000 1xRTT System Information Transmission in E-UTRAN ... 64
10.3.2.3.1.2 Measuring cdma2000 1xRTT from E-UTRAN ... 64
10.3.2.3.1.2.1 Idle Mode Measurement Control ... 64
10.3.2.3.1.2.2 Active Mode Measurement Control ... 64
10.3.2.3.1.2.3 Active Mode Measurement ... 65
10.3.2.3.1.3 E-UTRAN to cdma2000 1xRTT Cell Re-selection ... 65
10.3.2.3.1.4 E-UTRAN to cdma2000 1xRTT Handover ... 65
10.3.2.3.2 Mobility from cdma2000 1xRTT to E-UTRAN ... 65
10.3.2.3.3 1xRTT CS Fallback ... 65
10.4 Area Restrictions ... 66
10.5 Mobility to and from CSG cells ... 66
10.5.0 Principles for idle-mode mobility with CSG cells ... 66
10.5.0.1 Intra-frequency mobility ... 66
10.5.0.2 Inter-frequency mobility ... 66
10.5.0.3 Inter-RAT Mobility ... 66
10.5.1 Inbound mobility to CSG cells ... 66
10.5.1.1 RRC_IDLE ... 66
10.5.1.2 RRC_CONNECTED ... 67
10.5.2 Outbound mobility from CSG cells ... 67
10.5.2.1 RRC_IDLE ... 67
10.5.2.2 RRC_CONNECTED ... 67
10.6 Measurement Model ... 67

11 Scheduling and Rate Control ... 68
11.1 Basic Scheduler Operation ... 68
11.1.1 Downlink Scheduling ... 68
11.1.2 Uplink Scheduling ... 68
11.2 Void ... 69
11.3 Measurements to Support Scheduler Operation ... 69
11.4 Rate Control of GBR and UE-AMBR ... 69
11.4.1 Downlink ... 69

11.4.2 Uplink ... 69
11.5 CQI reporting for Scheduling ... 69

12 DRX in RRC_CONNECTED ... 70

13 QoS ... 71
13.1 Bearer service architecture ... 71
13.2 QoS parameters ... 72

14 Security ... 73
14.1 Overview and Principles ... 73
14.2 Security termination points ... 75
14.3 State Transitions and Mobility ... 75
14.3.1 RRC_IDLE to RRC_CONNECTED ... 75
14.3.2 RRC_CONNECTED to RRC_IDLE ... 75
14.3.3 Intra E-UTRAN Mobility ... 75
14.4 AS Key Change in RRC_CONNECTED ... 76
14.5 Security Interworking ... 76

15 MBMS ... 76
15.1 General ... 77
15.1.1 E-MBMS Logical Architecture ... 77
15.1.2 E-MBMS User Plane Protocol Architecture ... 79
15.2 MBMS Cells ... 80
15.2.1 MBMS-dedicated cell ... 80
15.2.2 MBMS/Unicast-mixed cell ... 80
15.3 MBMS Transmission ... 80
15.3.1 General ... 80
15.3.2 Single-cell transmission ... 80
15.3.3 Multi-cell transmission ... 81
15.3.4 MBMS Reception States ... 82
15.3.5 MCCH Structure ... 82
15.4 Service Continuity ... 82
15.5 Network sharing ... 83
15.6 Network Functions for Support of Multiplexing ... 83
15.7 Procedures ... 83
15.7.1 Procedures for Broadcast mode ... 83
15.7.1.1 Session Start procedure ... 83
15.7.1.2 Session Stop procedure ... 84

16 Radio Resource Management aspects ... 85
16.1 RRM functions ... 85
16.1.1 Radio Bearer Control (RBC) ... 85
16.1.2 Radio Admission Control (RAC) ... 85
16.1.3 Connection Mobility Control (CMC) ... 86
16.1.4 Dynamic Resource Allocation (DRA) - Packet Scheduling (PS) ... 86
16.1.5 Inter-cell Interference Coordination (ICIC) ... 86
16.1.6 Load Balancing (LB) ... 86
16.1.7 Inter-RAT Radio Resource Management ... 86
16.1.8 Subscriber Profile ID for RAT/Frequency Priority ... 87
16.2 RRM architecture ... 87
16.2.1 Centralised Handling of certain RRM Functions ... 87
16.2.2 De-Centralised RRM ... 87
16.2.2.1 UE History Information ... 87
16.2.3 Load balancing control ... 88

17 RF aspects ... 88
17.1 Spectrum deployments ... 88

18 UE capabilities ... 88

19 S1 Interface ... 89
19.1 S1 User plane ... 89
19.2 S1 Control Plane ... 89
19.2.1 S1 Interface Functions ... 90

19.2.1.1 S1 Paging function ... 91
19.2.1.2 S1 UE Context Management function ... 91
19.2.1.3 Initial Context Setup Function ... 91
19.2.1.3a UE Context Modification Function ... 91
19.2.1.4 Mobility Functions for UEs in ECM-CONNECTED ... 91
19.2.1.4.1 Intra-LTE Handover ... 91
19.2.1.4.2 Inter-3GPP-RAT Handover ... 91
19.2.1.5 E-RAB Service Management function ... 91
19.2.1.6 NAS Signalling Transport function ... 91
19.2.1.7 NAS Node Selection Function (NNSF) ... 92
19.2.1.8 S1-interface management functions ... 92
19.2.1.9 MME Load balancing Function ... 92
19.2.1.10 Location Reporting Function ... 92
19.2.1.11 Warning Message Transmission function ... 92
19.2.1.12 Overload Function ... 92
19.2.1.13 RAN Information Management Function ... 92
19.2.1.14 S1 CDMA2000 Tunnelling function ... 93
19.2.1.15 Configuration Transfer Function ... 93
19.2.2 S1 Interface Signalling Procedures ... 93
19.2.2.1 Paging procedure ... 94
19.2.2.2 S1 UE Context Release procedure ... 94
19.2.2.2.1 S1 UE Context Release (EPC triggered) ... 95
19.2.2.2.2 S1 UE Context Release Request (eNB triggered) ... 95
19.2.2.3 Initial Context Setup procedure ... 95
19.2.2.3a UE Context Modification procedure ... 96
19.2.2.4 E-RAB signalling procedures ... 97
19.2.2.4.1 E-RAB Setup procedure ... 97
19.2.2.4.2 E-RAB Modification procedure ... 98
19.2.2.4.3 E-RAB Release procedure ... 98
19.2.2.4.4 E-RAB Release Indication procedure ... 99
19.2.2.5 Handover signalling procedures ... 100
19.2.2.5.1 Handover Preparation procedure ... 100
19.2.2.5.2 Handover Resource Allocation procedure ... 100
19.2.2.5.3 Handover Notification procedure ... 101
19.2.2.5.4 Handover Cancellation ... 101
19.2.2.5.5 Path Switch procedure ... 102
19.2.2.5.6 Message sequence diagrams ... 102
19.2.2.6 NAS transport procedures ... 109
19.2.2.7 S1 interface Management procedures ... 111
19.2.2.7.1 Reset procedure ... 111
19.2.2.7.1a eNB initiated Reset procedure ... 111
19.2.2.7.1b MME initiated Reset procedure ... 111
19.2.2.7.2 Error Indication functions and procedures ... 112
19.2.2.7.2a eNB initiated error indication ... 112
19.2.2.7.2b MME initiated error indication ... 112
19.2.2.8 S1 Setup procedure ... 113
19.2.2.9 eNB Configuration Update procedure ... 113
19.2.2.9a eNB Configuration Transfer procedure ... 114
19.2.2.10 MME Configuration Update procedure ... 114
19.2.2.10a MME Configuration Transfer procedure ... 115
19.2.2.11 Location Reporting procedures ... 115
19.2.2.11.1 Location Reporting Control procedure ... 116
19.2.2.11.2 Location Report procedure ... 116
19.2.2.11.3 Location Report Failure Indication procedure ... 116
19.2.2.12 Overload procedure ... 117
19.2.2.12.1 Overload Start procedure ... 117
19.2.2.12.2 Overload Stop procedure ... 117
19.2.2.13 Write-Replace Warning procedure ... 117
19.2.2.14 eNB Direct Information Transfer procedure ... 118
19.2.2.15 MME Direct Information Transfer procedure ... 118
19.2.2.16 S1 CDMA2000 Tunnelling procedures ... 118
19.2.2.16.1 Downlink S1 CDMA2000 Tunnelling procedure ... 119

19.2.2.16.2 Uplink S1 CDMA2000 Tunnelling procedure ... 119

20 X2 Interface ... 119
20.1 User Plane ... 119
20.2 Control Plane ... 120
20.2.1 X2-CP Functions ... 120
20.2.2 X2-CP Procedures ... 121
20.2.2.1 Handover Preparation procedure ... 121
20.2.2.2 Handover Cancel procedure ... 122
20.2.2.3 UE Context Release procedure ... 123
20.2.2.4 SN Status Transfer procedure ... 123
20.2.2.5 Error Indication procedure ... 123
20.2.2.6 Load Indication procedure ... 124
20.2.2.7 X2 Setup procedure ... 124
20.2.2.8 eNB Configuration Update procedure ... 125
20.2.2.9 Reset procedure ... 125
20.2.3 Void ... 125

21 System and Terminal complexity ... 126
21.1 Overall System complexity ... 126
21.2 Physical layer complexity ... 126
21.3 UE complexity ... 126

22 Support for self-configuration and self-optimisation ... 126
22.1 Definitions ... 126
22.2 UE Support for self-configuration and self-optimisation ... 127
22.3 Self-configuration ... 127
22.3.1 Dynamic configuration of the S1-MME interface ... 127
22.3.1.1 Prerequisites ... 127
22.3.1.2 SCTP initialization ... 128
22.3.1.3 Application layer initialization ... 128
22.3.2 Dynamic Configuration of the X2 interface ... 128
22.3.2.1 Prerequisites ... 128
22.3.2.2 SCTP initialization ... 128
22.3.2.3 Application layer initialization ... 128
22.3.2a Automatic Neighbour Relation Function ... 128
22.3.3 Intra-LTE/frequency Automatic Neighbour Relation Function ... 130
22.3.4 Inter-RAT/Inter-frequency Automatic Neighbour Relation Function ... 131
22.3.5 Framework for PCI Selection ... 132
22.3.6 TNL address discovery ... 132
22.3.6.1 TNL address discovery of candidate eNB via S1 interface ... 132

23 Others ... 133
23.1 Support for real time IMS services ... 133
23.2 Subscriber and equipment trace ... 133
23.2.1 Signalling activation ... 133
23.2.2 Management activation ... 133

Annex A (informative): NAS Overview ... 134

A.1 Services and Functions ... 134

A.2 NAS protocol states & state transitions ... 134

Annex B (informative): MAC and RRC Control ... 135

B.1 Difference between MAC and RRC control ... 135

B.2 Classification of MAC and RRC control functions ... 135

Annex C (informative): System Information ... 136

C.1 SI classification ... 136
C.1.1 Information valid across multiple cells ... 136
C.1.2 Information needed at cell/PLMN search ... 136

C.1.3 Information needed prior to cell camping ... 137
C.1.4 Information needed prior to cell access ... 137
C.1.5 Information needed while camping on a cell ... 138
C.1.6 Thoughts about category division ... 139

C.2 Division of SI between static and flexible parts ... 139
C.2.1 Static part ... 139
C.2.2 Flexible part ... 140
C.2.3 Information whose location is FFS ... 141
C.2.4 Dedicated part ... 141

Annex D (informative): MBMS ... 142
D.1 MBMS control & functions ... 142
D.2 MBMS transmission ... 142
D.3 Deployment Scenarios ... 143
D.4 MCCH Information ... 144

Annex E (informative): Drivers for Mobility Control ... 145
E.1 Drivers ... 146
E.1.1 Best radio condition ... 146
E.1.2 Camp load balancing ... 146
E.1.3 Traffic load balancing ... 146
E.1.4 UE capability ... 146
E.1.5 Hierarchical cell structures ... 147
E.1.6 Network sharing ... 147
E.1.7 Private networks/home cells ... 147
E.1.8 Subscription based mobility control ... 147
E.1.9 Service based mobility control ... 147
E.1.10 MBMS ... 147
E.2 Limitations for mobility control ... 147
E.2.1 UE battery saving ... 148
E.2.2 Network signalling/processing load ... 148
E.2.3 U-plane interruption and data loss ... 148
E.2.4 OAM complexity ... 148
E.3 Inter-frequency/RAT drivers ... 148
E.3.1 Mobility control during IDLE mode ... 148
E.3.2 Mobility control upon IDLE to ACTIVE transition ... 149
E.3.3 Mobility control during ACTIVE mode ... 150
E.3.4 Mobility control upon ACTIVE to IDLE transition ... 151

Annex F (informative): Mobility and Access Control Requirements associated with Closed Subscriber Group (CSG) Cells ... 152
F.1 Access Control ... 152
F.2 Mobility ... 152
F.3 Mobility performance guidelines ... 154

Annex G (informative): Guideline for E-UTRAN UE capabilities ... 155

Annex H (informative): PDCCH, PHICH and PUCCH Performance ... 156

Annex I (informative): Change history ... 157

Foreword

This Technical Specification has been produced by the 3rd Generation Partnership Project (3GPP).

The contents of the present document are subject to continuing work within the TSG and may change following formal TSG approval. Should the TSG modify the contents of the present document, it will be re-released by the TSG with an identifying change of release date and an increase in version number as follows:

Version x.y.z

where:

- x the first digit:
  - 1 presented to TSG for information;
  - 2 presented to TSG for approval;
  - 3 or greater indicates TSG approved document under change control.
- y the second digit is incremented for all changes of substance, i.e. technical enhancements, corrections, updates, etc.
- z the third digit is incremented when editorial only changes have been incorporated in the document.

1 Scope

The present document provides an overview and overall description of the E-UTRAN radio interface protocol architecture. Details of the radio interface protocols are specified in companion specifications of the 36 series, with the exception of MBMS which is not part of Rel-8.

2 References

The following documents contain provisions which, through reference in this text, constitute provisions of the present document.

- References are either specific (identified by date of publication, edition number, version number, etc.) or non-specific.
- For a specific reference, subsequent revisions do not apply.
- For a non-specific reference, the latest version applies. In the case of a reference to a 3GPP document (including a GSM document), a non-specific reference implicitly refers to the latest version of that document *in the same Release as the present document*.

[1] 3GPP TR 21.905: "Vocabulary for 3GPP Specifications"

[2] 3GPP TR 25.913: "Requirements for Evolved UTRA (E-UTRA) and Evolved UTRAN (E-UTRAN)"

[3] 3GPP TS 36.201: "Evolved Universal Terrestrial Radio Access (E-UTRA); Physical layer; General description".

[4] 3GPP TS 36.211:"Evolved Universal Terrestrial Radio Access (E-UTRA); Physical Channels and Modulation "

[5] 3GPP TS 36.212: "Evolved Universal Terrestrial Radio Access (E-UTRA); Multiplexing and channel coding"

[6] 3GPP TS 36.213: "Evolved Universal Terrestrial Radio Access (E-UTRA); Physical layer procedures"

[7] 3GPP TS 36.214: "Evolved Universal Terrestrial Radio Access (E-UTRA); Physical layer; Measurements"

[8] IETF RFC 4960 (09/2007): "Stream Control Transmission Protocol"

[9] 3GPP TS 36.302: "Evolved Universal Terrestrial Radio Access (E-UTRA); Services provided by the physical layer"

[11] 3GPP TS 36.304: "Evolved Universal Terrestrial Radio Access (E-UTRA); User Equipment (UE) procedures in idle mode"

[12] 3GPP TS 36.306: "Evolved Universal Terrestrial Radio Access (E-UTRA); User Equipment (UE) radio access capabilities"

[13] 3GPP TS 36.321: "Evolved Universal Terrestrial Radio Access (E-UTRA); Medium Acces Control (MAC) protocol specification"

[14] 3GPP TS 36.322: "Evolved Universal Terrestrial Radio Access (E-UTRA); Radio Link Control (RLC) protocol specification"

[15] 3GPP TS 36.323: "Evolved Universal Terrestrial Radio Access (E-UTRA); Packet Data Convergence Protocol (PDCP) specification"

[16] 3GPP TS 36.331: "Evolved Universal Terrestrial Radio Access (E-UTRA); Radio Resource Control (RRC) protocol specification".

[17] 3GPP TS 23.401: "Technical Specification Group Services and System Aspects; GPRS enhancements for E-UTRAN access".

[18] 3GPP TR 24.801: "3GPP System Architecture Evolution (SAE); CT WG1 aspects".

[19] 3GPP TS 23.402: "3GPP System Architecture Evolution: Architecture Enhancements for non-3GPP accesses".

[20] 3GPP TR 24.301: "Non-Access-Stratum (NAS) protocol for Evolved Packet System (EPS); Stage 3".

[21] 3GPP TS 36.133: "Evolved Universal Terrestrial Radio Access (E-UTRA); "Requirements for support of radio resource management".

[22] 3GPP TS 33.401: "3GPP System Architecture Evolution: Security Architecture".

[23] 3GPP TS 23.272: "Circuit Switched Fallback in Evolved Packet System; Stage 2".

[24] 3GPP TS 33.401: "3GPP System Architecture Evolution: Security Architecture".

[25] 3GPP TS 36.413: "Evolved Universal Terrestrial Radio Access Network (E-UTRAN); S1 Application Protocol (S1AP)".

[26] 3GPP TS 23.003: "Numbering, addressing and identification".

[27] 3GPP TR 25.922: "Radio Resource Management Strategies".

[28] 3GPP TS 23.216: "Single Radio voice Call continuity (SRVCC); Stage 2".

[29] 3GPP TS 32.421: "Subscriber and equipment trace: Trace concepts and requirements".

[30] 3GPP TS 32.422: "Subscriber and equipment trace; Trace control and configuration management".

[31] 3GPP TS 32.423: "Subscriber and equipment trace: Trace data definition and management".

3 Definitions, symbols and abbreviations

3.1 Definitions

For the purposes of the present document, the following terms and definitions apply.

Carrier frequency: center frequency of the cell.

E-RAB: An E-RAB uniquely identifies the concatenation of an S1 Bearer and the corresponding Data Radio Bearer. When an E-RAB exists, there is a one-to-one mapping between this E-RAB and an EPS bearer of the Non Access Stratum as defined in [17].

MBMS-dedicated cell: cell dedicated to MBMS transmission.

Frequency layer: set of cells with the same carrier frequency.

Handover: procedure that changes the serving cell of a UE in RRC_CONNECTED.

Unicast/MBMS-mixed cell: cell supporting both unicast and MBMS transmissions.

3.2 Abbreviations

For the purposes of the present document, the abbreviations given in TR 21.905 [1] and the following apply. An abbreviation defined in the present document takes precedence over the definition of the same abbreviation, if any, in TR 21.905 [1].

ACK	Acknowledgement
ACLR	Adjacent Channel Leakage Ratio
AM	Acknowledge Mode
AMBR	Aggregate Maximum Bit Rate
ANR	Automatic Neighbour Relation

ARQ	Automatic Repeat Request
AS	Access Stratum
BCCH	Broadcast Control Channel
BCH	Broadcast Channel
BSR	Buffer Status Reports
C/I	Carrier-to-Interference Power Ratio
CAZAC	Constant Amplitude Zero Auto-Correlation
CMC	Connection Mobility Control
CP	Cyclic Prefix
C-plane	Control Plane
C-RNTI	Cell RNTI
CQI	Channel Quality Indicator
CRC	Cyclic Redundancy Check
CSG	Closed Subscriber Group
DCCH	Dedicated Control Channel
DL	Downlink
DFTS	DFT Spread OFDM
DRB	Data Radio Bearer
DRX	Discontinuous Reception
DTCH	Dedicated Traffic Channel
DTX	Discontinuous Transmission
DwPTS	Downlink Pilot Time Slot
ECGI	E-UTRAN Cell Global Identifier
ECM	EPS Connection Management
EMM	EPS Mobility Management
eNB	E-UTRAN NodeB
EPC	Evolved Packet Core
EPS	Evolved Packet System
E-RAB	E-UTRAN Radio Access Bearer
ETWS	Earthquake and Tsunami Warning System
E-UTRA	Evolved UTRA
E-UTRAN	Evolved UTRAN
FDD	Frequency Division Duplex
FDM	Frequency Division Multiplexing
GERAN	GSM EDGE Radio Access Network
GNSS	Global Navigation Satellite System
GSM	Global System for Mobile communication
GBR	Guaranteed Bit Rate
GP	Guard Period
HARQ	Hybrid ARQ
HO	Handover
HRPD	High Rate Packet Data
HSDPA	High Speed Downlink Packet Access
ICIC	Inter-Cell Interference Coordination
IP	Internet Protocol
LB	Load Balancing
LCR	Low Chip Rate
LTE	Long Term Evolution
MAC	Medium Access Control
MBMS	Multimedia Broadcast Multicast Service
MBR	Maximum Bit Rate
MBSFN	Multimedia Broadcast multicast service Single Frequency Network
MCCH	Multicast Control Channel
MCE	Multi-cell/multicast Coordination Entity
MCH	Multicast Channel
MCS	Modulation and Coding Scheme
MIB	Master Information Block
MIMO	Multiple Input Multiple Output
MME	Mobility Management Entity
MTCH	MBMS Traffic Channel
MSAP	MCH Subframe Allocation Pattern
NACK	Negative Acknowledgement

NAS	Non-Access Stratum
NCC	Next Hop Chaining Counter
NH	Next Hop key
NNSF	NAS Node Selection Function
NR	Neighbour cell Relation
NRT	Neighbour Relation Table
OFDM	Orthogonal Frequency Division Multiplexing
OFDMA	Orthogonal Frequency Division Multiple Access
P-GW	PDN Gateway
P-RNTI	Paging RNTI
PA	Power Amplifier
PAPR	Peak-to-Average Power Ratio
PBCH	Physical Broadcast CHannel
PBR	Prioritised Bit Rate
PCCH	Paging Control Channel
PCFICH	Physical Control Format Indicator CHannel
PCH	Paging Channel
PCI	Physical Cell Identifier
PDCCH	Physical Downlink Control CHannel
PDSCH	Physical Downlink Shared CHannel
PDCP	Packet Data Convergence Protocol
PDU	Protocol Data Unit
PHICH	Physical Hybrid ARQ Indicator CHannel
PHY	Physical layer
PLMN	Public Land Mobile Network
PMCH	Physical Multicast CHannel
PRACH	Physical Random Access CHannel
PRB	Physical Resource Block
PSC	Packet Scheduling
PUCCH	Physical Uplink Control CHannel
PUSCH	Physical Uplink Shared CHannel
QAM	Quadrature Amplitude Modulation
QCI	QoS Class Identifier
QoS	Quality of Service
RA-RNTI	Random Access RNTI
RAC	Radio Admission Control
RACH	Random Access Channel
RAT	Radio Access Technology
RB	Radio Bearer
RBC	Radio Bearer Control
RBG	Radio Bearer Group
RF	Radio Frequency
RIM	RAN Information Management
RLC	Radio Link Control
RNC	Radio Network Controller
RNL	Radio Network Layer
RNTI	Radio Network Temporary Identifier
ROHC	Robust Header Compression
RRC	Radio Resource Control
RRM	Radio Resource Management
RU	Resource Unit
S-GW	Serving Gateway
S1-MME	S1 for the control plane
SI	System Information
SIB	System Information Block
SI-RNTI	System Information RNTI
S1-U	S1 for the user plane
SAE	System Architecture Evolution
SAP	Service Access Point
SC-FDMA	Single Carrier – Frequency Division Multiple Access
SCH	Synchronization Channel
SDF	Service Data Flow

SDMA	Spatial Division Multiple Access
SDU	Service Data Unit
SeGW	Security Gateway
SFN	System Frame Number
SPID	Subscriber Profile ID for RAT/Frequency Priority
SR	Scheduling Request
SRB	Signalling Radio Bearer
SU	Scheduling Unit
TA	Tracking Area
TB	Transport Block
TCP	Transmission Control Protocol
TDD	Time Division Duplex
TFT	Traffic Flow Template
TM	Transparent Mode
TNL	Transport Network Layer
TTI	Transmission Time Interval
UE	User Equipment
UL	Uplink
UM	Un-acknowledge Mode
UMTS	Universal Mobile Telecommunication System
U-plane	User plane
UTRA	Universal Terrestrial Radio Access
UTRAN	Universal Terrestrial Radio Access Network
UpPTS	Uplink Pilot Time Slot
VRB	Virtual Resource Block
X2-C	X2-Control plane
X2-U	X2-User plane

4 Overall architecture

The E-UTRAN consists of eNBs, providing the E-UTRA user plane (PDCP/RLC/MAC/PHY) and control plane (RRC) protocol terminations towards the UE. The eNBs are interconnected with each other by means of the X2 interface. The eNBs are also connected by means of the S1 interface to the EPC (Evolved Packet Core), more specifically to the MME (Mobility Management Entity) by means of the S1-MME and to the Serving Gateway (S-GW) by means of the S1-U. The S1 interface supports a many-to-many relation between MMEs / Serving Gateways and eNBs.

The E-UTRAN architecture is illustrated in Figure 4 below.

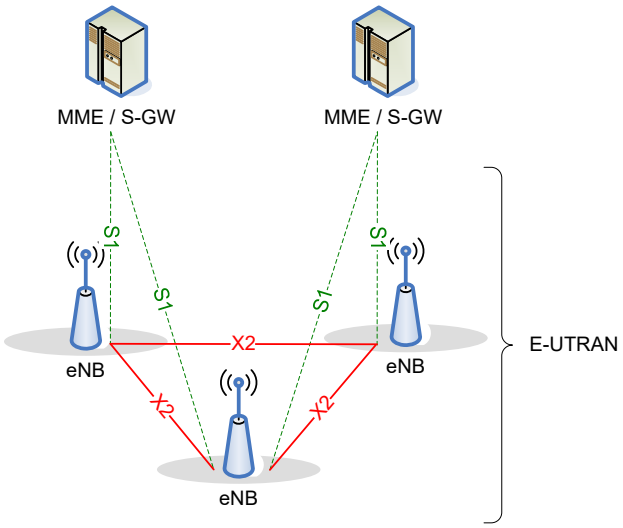

Figure 4-1: Overall Architecture

4.1 Functional Split

The eNB hosts the following functions:

- Functions for Radio Resource Management: Radio Bearer Control, Radio Admission Control, Connection Mobility Control, Dynamic allocation of resources to UEs in both uplink and downlink (scheduling);
- IP header compression and encryption of user data stream;
- Selection of an MME at UE attachment when no routing to an MME can be determined from the information provided by the UE;
- Routing of User Plane data towards Serving Gateway;
- Scheduling and transmission of paging messages (originated from the MME);
- Scheduling and transmission of broadcast information (originated from the MME or O&M);
- Measurement and measurement reporting configuration for mobility and scheduling;
- Scheduling and transmission of ETWS messages (originated from the MME).

The MME hosts the following functions (see 3GPP TS 23.401 [17]):

- NAS signalling;
- NAS signalling security;
- AS Security control;
- Inter CN node signalling for mobility between 3GPP access networks;
- Idle mode UE Reachability (including control and execution of paging retransmission);
- Tracking Area list management (for UE in idle and active mode);
- PDN GW and Serving GW selection;
- MME selection for handovers with MME change;
- SGSN selection for handovers to 2G or 3G 3GPP access networks;
- Roaming;
- Authentication;
- Bearer management functions including dedicated bearer establishment;
- Support for ETWS message transmission.

The Serving Gateway (S-GW) hosts the following functions (see 3GPP TS 23.401 [17]):

- The local Mobility Anchor point for inter-eNB handover;
- Mobility anchoring for inter-3GPP mobility;
- E-UTRAN idle mode downlink packet buffering and initiation of network triggered service request procedure;
- Lawful Interception;
- Packet routeing and forwarding;
- Transport level packet marking in the uplink and the downlink;
- Accounting on user and QCI granularity for inter-operator charging;
- UL and DL charging per UE, PDN, and QCI.

The PDN Gateway (P-GW) hosts the following functions (see 3GPP TS 23.401 [17]):

- Per-user based packet filtering (by e.g. deep packet inspection);
- Lawful Interception;
- UE IP address allocation;
- Transport level packet marking in the downlink;
- UL and DL service level charging, gating and rate enforcement;
- DL rate enforcement based on APN-AMBR;

This is summarized on the figure below where yellow boxes depict the logical nodes, white boxes depict the functional entities of the control plane and blue boxes depict the radio protocol layers.

NOTE: it is assumed that no other logical E-UTRAN node than the eNB is needed for RRM purposes. Moreover, due to the different usage of inter-cell RRM functionalities, each inter-cell RRM functionality should be considered separately in order to assess whether it should be handled in a centralised manner or in a distributed manner.

NOTE: MBMS related functions in E-UTRAN are described separately in subclause 15.

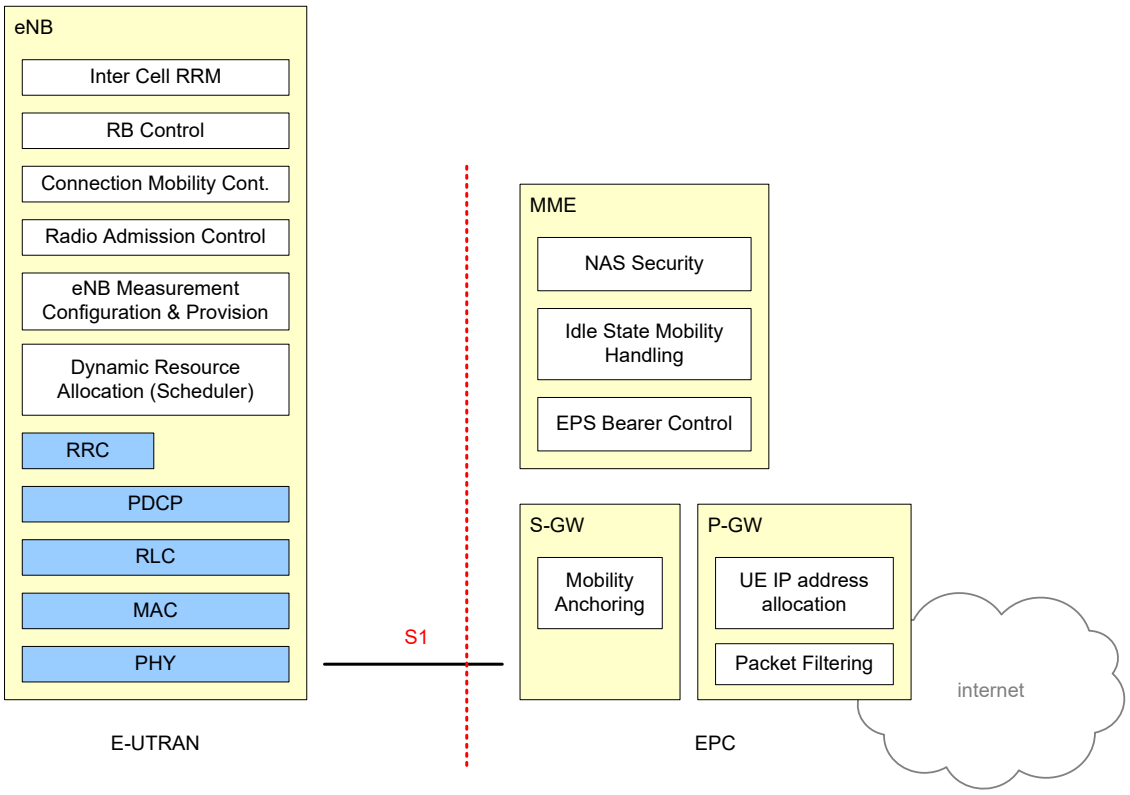

Figure 4.1-1: Functional Split between E-UTRAN and EPC

4.2 Interfaces

4.2.1 S1 Interface

4.2.2 X2 Interface

4.3 Radio Protocol architecture

In this subclause, the radio protocol architecture of E-UTRAN is given for the user plane and the control plane.

4.3.1 User plane

The figure below shows the protocol stack for the user-plane, where PDCP, RLC and MAC sublayers (terminated in eNB on the network side) perform the functions listed for the user plane in subclause 6, e.g. header compression, ciphering, scheduling, ARQ and HARQ;

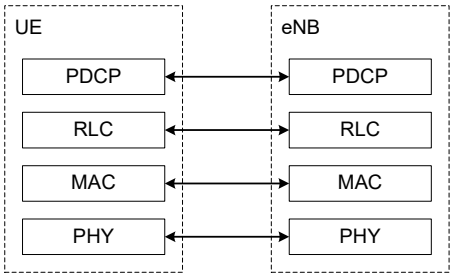

Figure 4.3.1-1: User-plane protocol stack

4.3.2 Control plane

The figure below shows the protocol stack for the control-plane, where:

- PDCP sublayer (terminated in eNB on the network side) performs the functions listed for the control plane in subclause 6, e.g. ciphering and integrity protection;
- RLC and MAC sublayers (terminated in eNB on the network side) perform the same functions as for the user plane;
- RRC (terminated in eNB on the network side) performs the functions listed in subclause 7, e.g.:
  - Broadcast;
  - Paging;
  - RRC connection management;
  - RB control;
  - Mobility functions;
  - UE measurement reporting and control.
- NAS control protocol (terminated in MME on the network side) performs among other things:
  - EPS bearer management;
  - Authentication;

- ECM-IDLE mobility handling;
- Paging origination in ECM-IDLE;
- Security control.

NOTE: the NAS control protocol is not covered by the scope of this TS and is only mentioned for information.

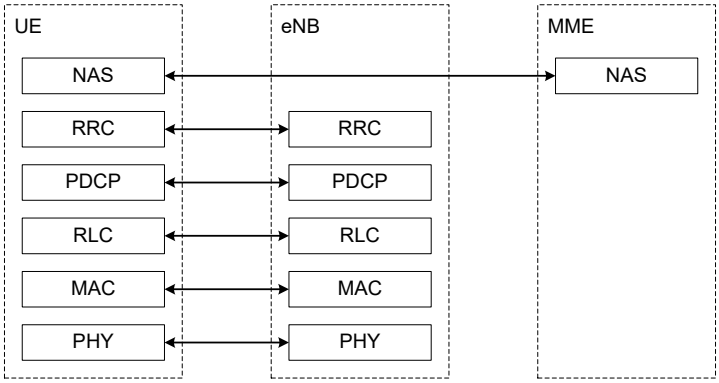

Figure 4.3.2-1: Control-plane protocol stack

4.4 Synchronization

Diverse methods and techniques are preferred depending on synchronization requirements. As no single method can cover all E-UTRAN applications a logical port at eNB may be used for reception of timing and/or frequency and/or phase inputs pending to the synchronization method chosen.

4.5 IP fragmentation

Fragmentation function in IP layer on S1 and X2 shall be supported.

Configuration of S1-U (X2-U) link MTU in the eNB/ S-GW according to the MTU of the network domain the node belongs to shall be considered as a choice at network deployment. The network may employ various methods to handle IP fragmentation, but the specific methods to use are implementation dependant.

At the establishment/modification of an EPS bearer, the network may signal a value that is to be used as MTU by the UE IP stack (it is FFS how the requirement on the UE should be formulated). It is also FFS if the MTU is signalled by the MME or the eNB.

4.6 Support of HeNBs

4.6.1 Architecture

Figure 4.6.1-1 shows a logical architecture for the HeNB that has a set of S1 interfaces to connect the HeNB to the EPC.

The configuration and authentication entities as shown here should be common to HeNBs and HNBs.

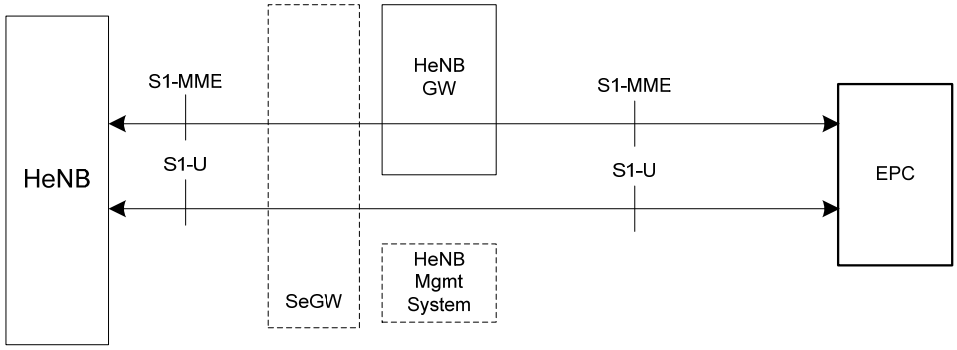

Figure 4.6.1-1: E-UTRAN HeNB Logical Architecture

The E-UTRAN architecture may deploy a Home eNB Gateway (HeNB GW) to allow the S1 interface between the HeNB and the EPC to scale to support a large number of HeNBs. The HeNB GW serves as a concentrator for the C-Plane, specifically the S1-MME interface. The S1-U interface from the HeNB may be terminated at the HeNB GW, or a direct logical U-Plane connection between HeNB and S-GW may be used (as shown in Figure 4.6.1-1).

This version of the specification does not support X2 connectivity of HeNBs.

The S1 interface is defined as the interface:

- Between the HeNB GW and the Core Network,
- Between the HeNB and the HeNB GW,
- Between the HeNB and the Core Network,
- Between the eNB and the Core Network.

The HeNB GW appears to the MME as an eNB. The HeNB GW appears to the HeNB as an MME. The S1 interface between the HeNB and the EPC is the same whether the HeNB is connected to the EPC via a HeNB GW or not.

The HeNB GW shall connect to the EPC in a way that inbound and outbound mobility to cells served by the HeNB GW shall not necessarily require inter MME handovers. One HeNB serves only one cell.

The functions supported by the HeNB shall be the same as those supported by an eNB (with the possible exception of NNSF) and the procedures run between a HeNB and the EPC shall be the same as those between an eNB and the EPC.

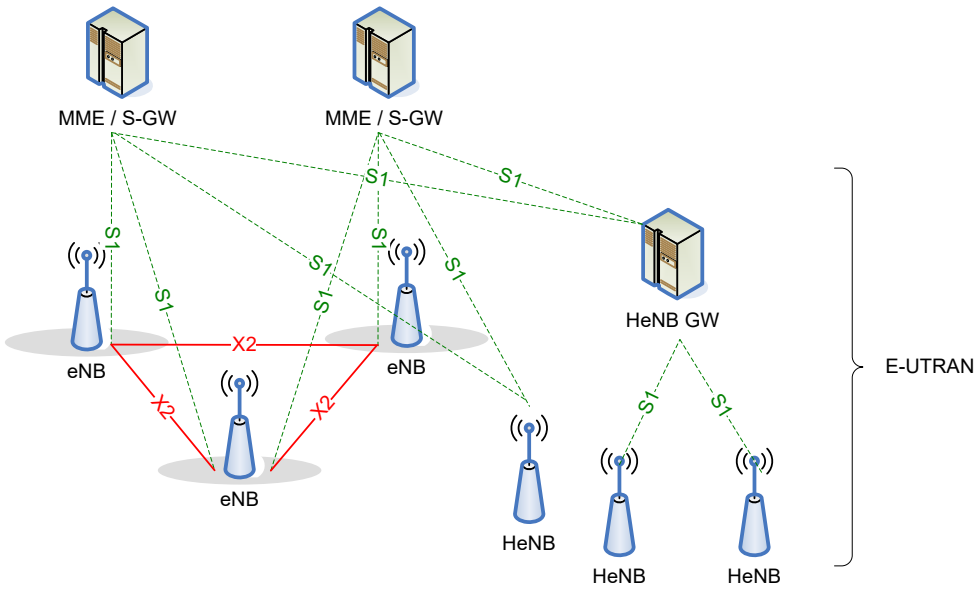

Figure 4.6.1-2: Overall E-UTRAN Architecture with deployed HeNB GW.

4.6.2 Functional Split

The HeNB hosts the same functions as an eNB as described in section 4.1, with the following additional specifications in case of connection to the HeNB GW:

- Discovery of a suitable Serving HeNB GW
- A HeNB shall only connect to a single HeNB GW at one time, namely no S1 Flex function shall be used at the HeNB in case of connection to the HeNB GW.
  - If the HeNB is connected to a HeNB GW, it will not simultaneously connect to another HeNB GW, or another MME.
- The TAC and PLMN ID used by the HeNB shall also be supported by the HeNB GW.
- When the HeNB connects to a HeNB GW, selection of an MME at UE attachment is hosted by the HeNB GW instead of the HeNB;
- HeNBs may be deployed without network planning. A HeNB may be moved from one geographical area to another and therefore it may need to connect to different HeNB GWs depending on its location.

The HeNB GW hosts the following functions:

- Relaying UE-associated S1 application part messages between the MME serving the UE and the HeNB serving the UE;
- Terminating non-UE associated S1 application part procedures towards the HeNB and towards the MME. Note that when a HeNB GW is deployed, non-UE associated procedures shall be run between HeNBs and the HeNB GW and between the HeNB GW and the MME.
- Optionally terminating S1-U interface with the HeNB and with the S-GW.
- Supporting TAC and PLMN ID used by the HeNB.
- X2 interfaces shall not be established between the HeNB GW and other nodes.
- Optionally performing paging optimisation in case the Allowed CSG List of the paged UE is included in the PAGING message.

In addition to functions specified in section 4.1, the MME hosts the following functions:

- Access control for UEs that are members of Closed Subscriber Groups (CSG).
- Optionally performing paging optimisation.

NOTE: The MME or HeNB GW should not include the Allowed CSG List when sending the paging message directly to an untrusted HeNB or eNB.

4.6.3 Interfaces

4.6.3.1 Protocol Stack for S1 User Plane

The S1-U data plane is defined between the HeNB, HeNB GW and the S-GW. The figures below shows the S1-U protocol stack with and without the HeNB GW.

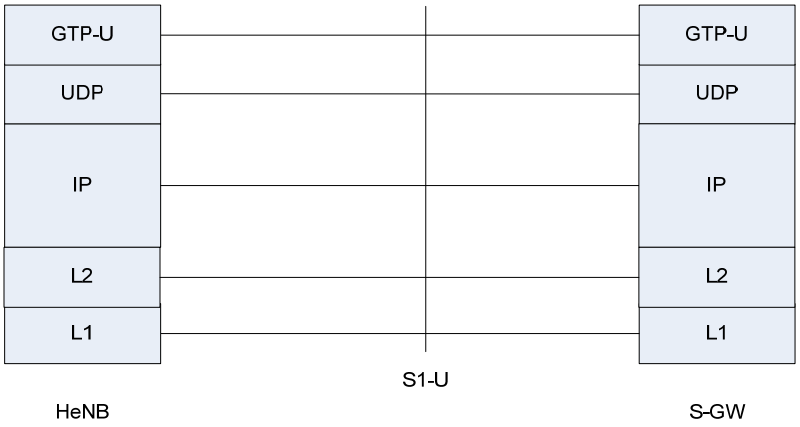

Figure 4.6.3.1-1: User plane for S1-U interface for HeNB without HeNB GW

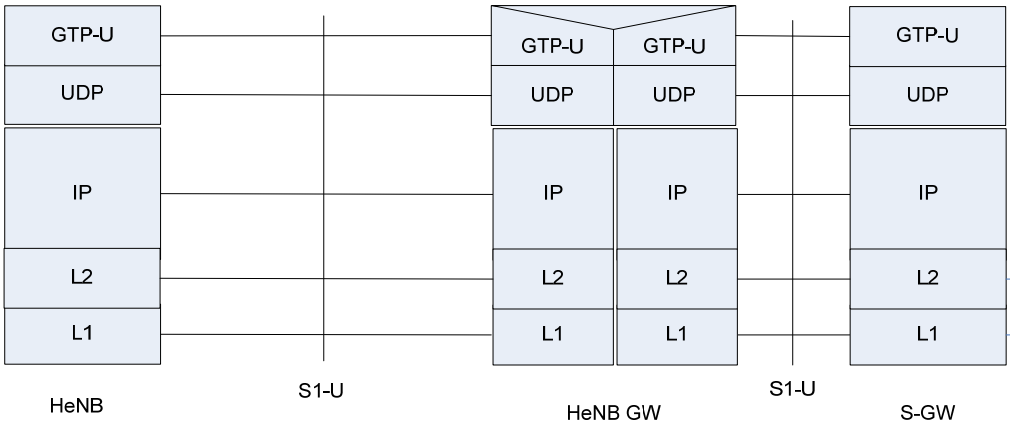

Figure 4.6.3.1-2: User plane for S1-U interface for HeNB with HeNB GW

The HeNB GW may optionally terminate the user plane towards the HeNB and towards the S-GW, and provide a relay function for relaying User Plane data between the HeNB and the S-GW.

4.6.3.2 Protocol Stacks for S1 Control Plane

The two figures below show the S1-MME protocol stacks with and without the HeNB GW.

When the HeNB GW is not present (Fig. 4.6.3.2-1), all the S1 procedures are terminated at the HeNB and the MME.

When present (Fig. 4.6.3.2-2), the HeNB GW shall terminate the non-UE-dedicated procedures – both with the HeNB, and with the MME. The HeNB GW shall provide a relay function for relaying Control Plane data between the HeNB

and the MME. The scope of any protocol function associated to a non-UE-dedicated procedure shall be between HeNB and HeNB GW and/or between HeNB GW and MME.

Any protocol function associated to an UE-dedicated-procedure shall reside within the HeNB and the MME only.

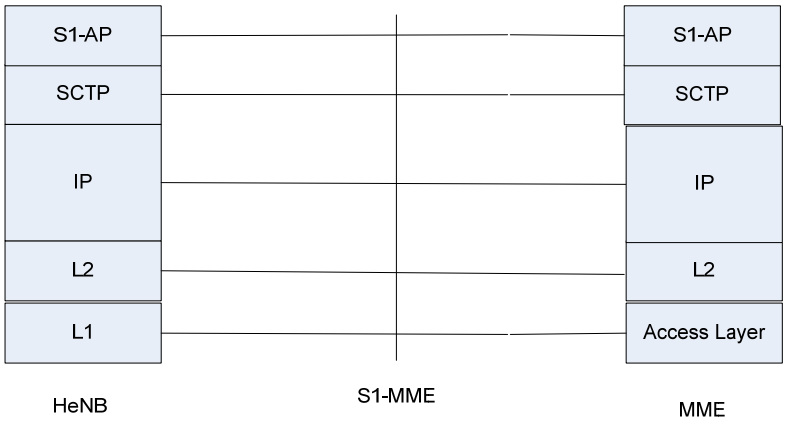

Figure 4.6.3.2-1: Control plane for S1-MME Interface for HeNB to MME without the HeNB GW

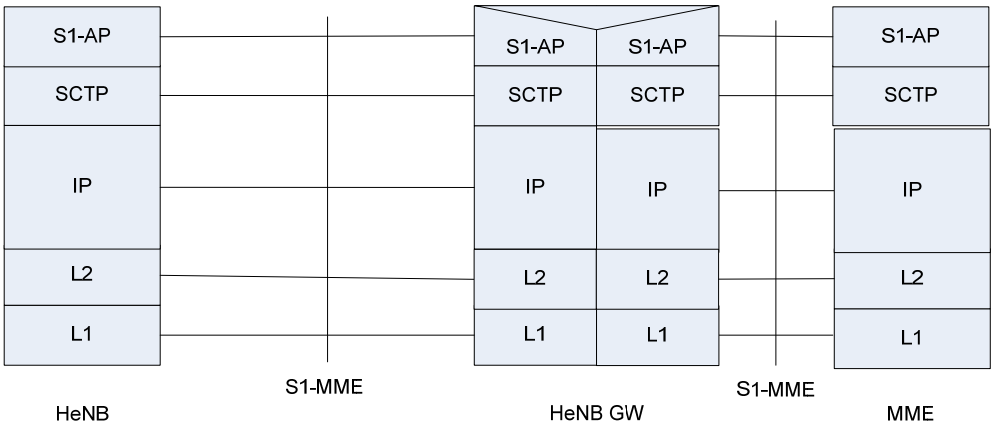

Figure 4.6.3.2-2: Control plane for S1-MME Interface for HeNB to MME with the HeNB GW

5 Physical Layer for E-UTRA

Downlink and uplink transmissions are organized into radio frames with 10 ms duration. Two radio frame structures are supported:

- Type 1, applicable to FDD,
- Type 2, applicable to TDD.

Frame structure Type 1 is illustrated in Figure 5.1-1. Each 10 ms radio frame is divided into ten equally sized sub-frames. Each sub-frame consists of two equally sized slots. For FDD, 10 subframes are available for downlink transmission and 10 subframes are available for uplink transmissions in each 10 ms interval. Uplink and downlink transmissions are separated in the frequency domain.

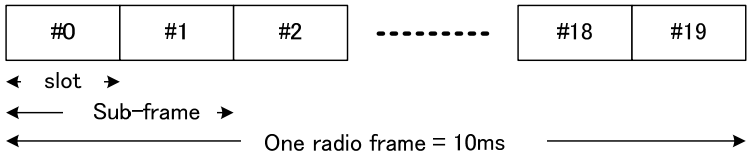

Figure 5-1: Frame structure type 1

Frame structure Type 2 is illustrated in Figure 5.1-2. Each 10 ms radio frame consists of two half-frames of 5 ms each. Each half-frame consists of eight slots of length 0.5 ms and three special fields: DwPTS, GP and UpPTS. The length of DwPTS and UpPTS is configurable subject to the total length of DwPTS, GP and UpPTS being equal to 1ms. Both 5ms and 10ms switch-point periodicity are supported. Subframe 1 in all configurations and subframe 6 in configuration with 5ms switch-point periodicity consist of DwPTS, GP and UpPTS. Subframe 6 in configuration with 10ms switch-point periodicity consists of DwPTS only. All other subframes consist of two equally sized slots.

For TDD, GP is reserved for downlink to uplink transition. Other Subframes/Fields are assigned for either downlink or uplink transmission. Uplink and downlink transmissions are separated in the time domain.

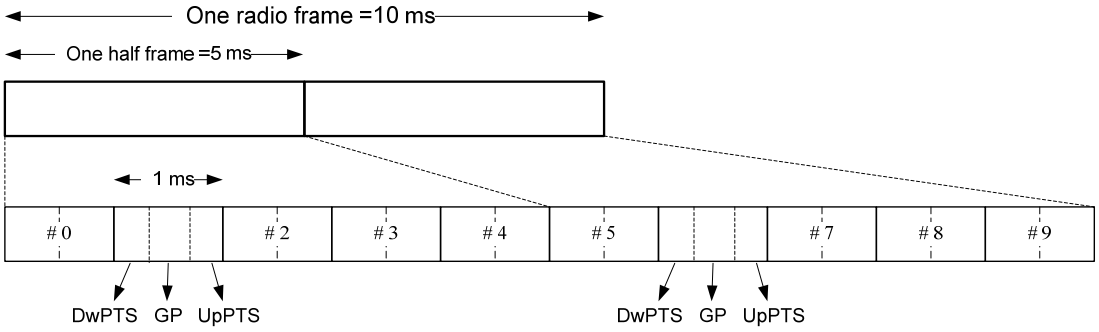

Figure 5-2: Frame structure type 2 (for 5ms switch-point periodicity)

Table 5-1: Uplink-downlink allocations.

Configuration	Switch-point periodicity	Subframe number									
		0	1	2	3	4	5	6	7	8	9
0	5 ms	D	S	U	U	U	D	S	U	U	U
1	5 ms	D	S	U	U	D	D	S	U	U	D
2	5 ms	D	S	U	D	D	D	S	U	D	D
3	10 ms	D	S	U	U	U	D	D	D	D	D
4	10 ms	D	S	U	U	D	D	D	D	D	D
5	10 ms	D	S	U	D	D	D	D	D	D	D
6	5 ms	D	S	U	U	U	D	S	U	U	D

The physical channels of E-UTRA are:

Physical broadcast channel (PBCH)

- The coded BCH transport block is mapped to four subframes within a 40 ms interval;
- 40 ms timing is blindly detected, i.e. there is no explicit signalling indicating 40 ms timing;
- Each subframe is assumed to be self-decodable, i.e. the BCH can be decoded from a single reception, assuming sufficiently good channel conditions.

Physical control format indicator channel (PCFICH)

- Informs the UE about the number of OFDM symbols used for the PDCCHs;

- Transmitted in every downlink or special subframe.

Physical downlink control channel (PDCCH)

- Informs the UE about the resource allocation of PCH and DL-SCH, and Hybrid ARQ information related to DL-SCH;
- Carries the uplink scheduling grant.

Physical Hybrid ARQ Indicator Channel (PHICH)

- Carries Hybrid ARQ ACK/NAKs in response to uplink transmissions.

Physical downlink shared channel (PDSCH)

- Carries the DL-SCH and PCH.

Physical multicast channel (PMCH)

- Carries the MCH.

Physical uplink control channel (PUCCH)

- Carries Hybrid ARQ ACK/NAKs in response to downlink transmission;
- Carries Scheduling Request (SR);
- Carries CQI reports.

Physical uplink shared channel (PUSCH)

- Carries the UL-SCH.

Physical random access channel (PRACH)

- Carries the random access preamble.

5.1 Downlink Transmission Scheme

5.1.1 Basic transmission scheme based on OFDM

The downlink transmission scheme is based on conventional OFDM using a cyclic prefix. The OFDM sub-carrier spacing is Δf = 15 kHz. 12 consecutive sub-carriers during one slot correspond to one downlink *resource block*. In the frequency domain, the number of resource blocks, N_{RB}, can range from $N_{RB\text{-}min}$ = 6 to $N_{RB\text{-}max}$ = 110.

In addition there is also a reduced sub-carrier spacingΔf_{low} = 7.5 kHz, only for MBMS-dedicated cell.

In the case of 15 kHz sub-carrier spacing there are two cyclic-prefix lengths, corresponding to seven and six OFDM symbols per slot respectively.

- Normal cyclic prefix: $T_{CP} = 160\times Ts$ (OFDM symbol #0) , $T_{CP} = 144\times Ts$ (OFDM symbol #1 to #6)
- Extended cyclic prefix: $T_{CP\text{-}e} = 512\times Ts$ (OFDM symbol #0 to OFDM symbol #5)

  where $T_s = 1/(2048 \times \Delta f)$

In case of 7.5 kHz sub-carrier spacing, there is only a single cyclic prefix length $T_{CP\text{-}low} = 1024\times Ts$, corresponding to 3 OFDM symbols per slot.

In case of FDD, operation with half duplex from UE point of view is supported.

5.1.2 Physical-layer processing

The downlink physical-layer processing of transport channels consists of the following steps:

- CRC insertion: 24 bit CRC is the baseline for PDSCH;
- Channel coding: Turbo coding based on QPP inner interleaving with trellis termination;
- Physical-layer hybrid-ARQ processing;
- Channel interleaving;
- Scrambling: transport-channel specific scrambling on DL-SCH, BCH, and PCH. Common MCH scrambling for all cells involved in a specific MBSFN transmission;
- Modulation: QPSK, 16QAM, and 64QAM;
- Layer mapping and pre-coding;
- Mapping to assigned resources and antenna ports.

5.1.3 Physical downlink control channel

The downlink control signalling (PDCCH) is located in the first n OFDM symbols where $n \leq 4$ and consists of:

- Transport format and resource allocation related to DL-SCH and PCH, and hybrid ARQ information related to DL-SCH;
- Transport format, resource allocation, and hybrid-ARQ information related to UL-SCH;

Transmission of control signalling from these groups is mutually independent.

Multiple physical downlink control channels are supported and a UE monitors a set of control channels.

Control channels are formed by aggregation of control channel elements, each control channel element consisting of a set of resource elements. Different code rates for the control channels are realized by aggregating different numbers of control channel elements.

QPSK modulation is used for all control channels.

Each separate control channel has its own set of x-RNTI.

There is an implicit relation between the uplink resources used for dynamically scheduled data transmission, or the DL control channel used for assignment, and the downlink ACK/NAK resource used for feedback

5.1.4 Downlink Reference signal

The downlink reference signals consist of known reference symbols inserted in the first and third last OFDM symbol of each slot. There is one reference signal transmitted per downlink antenna port. The number of downlink antenna ports equals 1, 2, or 4. The two-dimensional reference signal sequence is generated as the symbol-by-symbol product of a two-dimensional orthogonal sequence and a two-dimensional pseudo-random sequence. There are 3 different two-dimensional orthogonal sequences and 170 different two-dimensional pseudo-random sequences. Each cell identity corresponds to a unique combination of one orthogonal sequence and one pseudo-random sequence, thus allowing for 504 unique cell identities 168 cell identity groups with 3 cell identities in each group).

Frequency hopping can be applied to the downlink reference signals. The frequency hopping pattern has a period of one frame (10 ms). Each frequency hopping pattern corresponds to one cell identity group.

The downlink MBSFN reference signals consist of known reference symbols inserted every other sub-carrier in the 3rd, 7th and 11th OFDM symbol of sub-frame in case of 15kHz sub-carrier spacing and extended cyclic prefix

5.1.5 Downlink multi-antenna transmission

Multi-antenna transmission with 2 and 4 transmit antennas is supported. The maximum number of codeword is two irrespective to the number of antennas with fixed mapping between code words to layers.

Spatial division multiplexing (SDM) of multiple modulation symbol streams to a single UE using the same time-frequency (-code) resource, also referred to as Single-User MIMO (SU-MIMO) is supported. When a MIMO channel is

solely assigned to a single UE, it is known as SU-MIMO. Spatial division multiplexing of modulation symbol streams to different UEs using the same time-frequency resource, also referred to as MU-MIMO, is also supported. There is semi-static switching between SU-MIMO and MU-MIMO per UE.

In addition, the following techniques are supported:

- Code-book-based pre-coding with a single pre-coding feedback per full system bandwidth when the system bandwidth (or subset of resource blocks) is smaller or equal to12RB and per 5 adjacent resource blocks or the full system bandwidth (or subset of resource blocks) when the system bandwidth is larger than 12RB.
- Rank adaptation with single rank feedback referring to full system bandwidth. Node B can override rank report.

5.1.6 MBSFN transmission

MBSFN is supported for the MCH transport channel. Multiplexing of transport channels using MBSFN and non-MBSFN transmission is done on a per-sub-frame basis. Additional reference symbols, transmitted using MBSFN are transmitted within MBSFN subframes.

5.1.7 Physical layer procedure

5.1.7.1 Link adaptation

Link adaptation (AMC: adaptive modulation and coding) with various modulation schemes and channel coding rates is applied to the shared data channel. The same coding and modulation is applied to all groups of resource blocks belonging to the same L2 PDU scheduled to one user within one TTI and within a single stream.

5.1.7.2 Power Control

Downlink power control can be used.

5.1.7.3 Cell search

Cell search is the procedure by which a UE acquires time and frequency synchronization with a cell and detects the Cell ID of that cell. E-UTRA cell search supports a scalable overall transmission bandwidth corresponding to 72 sub-carriers and upwards.

E-UTRA cell search is based on following signals transmitted in the downlink: the primary and secondary synchronization signals, the downlink reference signals.

The primary and secondary synchronization signals are transmitted over the centre 72 sub-carriers in the first and sixth subframe of each frame.

Neighbour-cell search is based on the same downlink signals as initial cell search.

5.1.8 Physical layer measurements definition

The physical layer measurements to support mobility are classified as:

- within E-UTRAN (intra-frequency, inter-frequency);
- between E-UTRAN and GERAN/UTRAN (inter-RAT);
- between E-UTRAN and non-3GPP RAT (Inter 3GPP access system mobility).

For measurements within E-UTRAN at least two basic UE measurement quantities shall be supported:

- Reference symbol received power (RSRP);
- E-UTRA carrier received signal strength indicator (RSSI).

5.2 Uplink Transmission Scheme

5.2.1 Basic transmission scheme

For both FDD and TDD, the uplink transmission scheme is based on single-carrier FDMA, more specifically DFTS-OFDM.

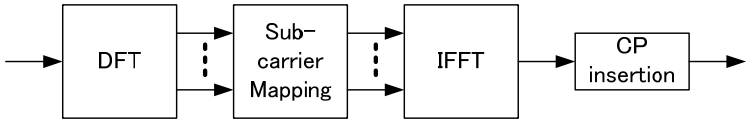

Figure 5.2.1-1: Transmitter scheme of SC-FDMA

The uplink sub-carrier spacing Δf = 15 kHz. The sub-carriers are grouped into sets of 12 consecutive sub-carriers, corresponding to the uplink resource blocks. 12 consecutive sub-carriers during one slot correspond to one uplink *resource block*. In the frequency domain, the number of resource blocks, N_{RB}, can range from $N_{RB\text{-}min}$ = 6 to $N_{RB\text{-}max}$ = 110.

There are two cyclic-prefix lengths defined: Normal cyclic prefix and extended cyclic prefix corresponding to seven and six SC-FDMA symbol per slot respectively.

- Normal cyclic prefix: T_{CP} = 160×Ts (SC-FDMA symbol #0) , T_{CP} = 144×Ts (SC-FDMA symbol #1 to #6)
- Extended cyclic prefix: $T_{CP\text{-}e}$ = 512×Ts (SC-FDMA symbol #0 to SC-FDMA symbol #5)

5.2.2 Physical-layer processing

The uplink physical layer processing of transport channels consists of the following steps:

- CRC insertion: 24 bit CRC is the baseline for PUSCH;
- Channel coding: turbo coding based on QPP inner interleaving with trellis termination;
- Physical-layer hybrid-ARQ processing;
- Scrambling: UE-specific scrambling;
- Modulation: QPSK, 16QAM, and 64QAM (64 QAM optional in UE);
- Mapping to assigned resources and antennas ports.

5.2.3 Physical uplink control channel

The PUCCH shall be mapped to a control channel resource in the uplink. A control channel resource is defined by a code and two resource blocks, consecutive in time, with hopping at the slot boundary.

Depending on presence or absence of uplink timing synchronization, the uplink physical control signalling can differ.

In the case of time synchronization being present, the outband control signalling consists of:

- CQI;
- ACK/NAK;
- Scheduling Request (SR).

The CQI informs the scheduler about the current channel conditions as seen by the UE. If MIMO transmission is used, the CQI includes necessary MIMO-related feedback.

The HARQ feedback in response to downlink data transmission consists of a single ACK/NAK bit per HARQ process.

PUCCH resources for SR and CQI reporting are assigned and can be revoked through RRC signalling. An SR is not necessarily assigned to UEs acquiring synchronization through the RACH (i.e. synchronised UEs may or may not have a dedicated SR channel). PUCCH resources for SR and CQI are lost when the UE is no longer synchronized.

5.2.4 Uplink Reference signal

Uplink reference signals [for channel estimation for coherent demodulation] are transmitted in the 4-th block of the slot [*assumed normal CP*]. The uplink reference signals sequence length equals the size (number of sub-carriers) of the assigned resource.

The uplink reference signals are based on prime-length Zadoff-chu sequences that are cyclically extended to the desired length.

Multiple reference signals can be created:

- Based on different Zadoff-Chu sequence from the same set of Zadoff-Chu sequences;
- Different shifts of the same sequence.

5.2.5 Random access preamble

The physical layer random access burst consists of a cyclic prefix, a preamble, and a guard time during which nothing is transmitted.

The random access preambles are generated from Zadoff-Chu sequences with zero correlation zone, ZC-ZCZ, generated from one or several root Zadoff-Chu sequences.

5.2.6 Uplink multi-antenna transmission

The baseline antenna configuration for uplink MIMO is MU-MIMO. To allow for MU-MIMO reception at the Node B, allocation of the same time and frequency resource to several UEs, each of which transmitting on a single antenna, is supported.

Closed loop type adaptive antenna selection transmit diversity shall be supported for FDD (optional in UE).

5.2.7 Physical channel procedure

5.2.7.1 Link adaptation

Uplink link adaptation is used in order to guarantee the required minimum transmission performance of each UE such as the user data rate, packet error rate, and latency, while maximizing the system throughput.

Three types of link adaptation are performed according to the channel conditions, the UE capability such as the maximum transmission power and maximum transmission bandwidth etc., and the required QoS such as the data rate, latency, and packet error rate etc. Three link adaptation methods are as follows.

- Adaptive transmission bandwidth;
- Transmission power control;
- Adaptive modulation and channel coding rate.

5.2.7.2 Uplink Power control

Intra-cell power control: the power spectral density of the uplink transmissions can be influenced by the eNB.

5.2.7.3 Uplink timing control

The timing advance is derived from the UL received timing and sent by the eNB to the UE which the UE uses to advance/delay its timings of transmissions to the eNB so as to compensate for propagation delay and thus time align the transmissions from different UEs with the receiver window of the eNB.

The timing advance command is on a per need basis with a granularity in the step size of 0.52 μs ($16 \times T_s$).

5.3 Transport Channels

The physical layer offers information transfer services to MAC and higher layers. The physical layer transport services are described by *how* and with what characteristics data are transferred over the radio interface. An adequate term for this is "Transport Channel".

NOTE: This should be clearly separated from the classification of *what* is transported, which relates to the concept of logical channels at MAC sublayer.

Downlink transport channel types are:

1. **Broadcast Channel (BCH)** characterised by:
   - fixed, pre-defined transport format;
   - requirement to be broadcast in the entire coverage area of the cell.
2. **Downlink Shared Channel (DL-SCH)** characterised by:
   - support for HARQ;
   - support for dynamic link adaptation by varying the modulation, coding and transmit power;
   - possibility to be broadcast in the entire cell;
   - possibility to use beamforming;
   - support for both dynamic and semi-static resource allocation;
   - support for UE discontinuous reception (DRX) to enable UE power saving;
   - support for MBMS transmission.

NOTE: the possibility to use slow power control depends on the physical layer.

3. **Paging Channel (PCH)** characterised by:
   - support for UE discontinuous reception (DRX) to enable UE power saving (DRX cycle is indicated by the network to the UE);
   - requirement to be broadcast in the entire coverage area of the cell;
   - mapped to physical resources which can be used dynamically also for traffic/other control channels.
4. **Multicast Channel (MCH)** characterised by:
   - requirement to be broadcast in the entire coverage area of the cell;
   - support for MBSFN combining of MBMS transmission on multiple cells;
   - support for semi-static resource allocation e.g. with a time frame of a long cyclic prefix.

Uplink transport channel types are:

1. **Uplink Shared Channel (UL-SCH)** characterised by:
   - possibility to use beamforming; (likely no impact on specifications)
   - support for dynamic link adaptation by varying the transmit power and potentially modulation and coding;
   - support for HARQ;
   - support for both dynamic and semi-static resource allocation.

NOTE: the possibility to use uplink synchronisation and timing advance depend on the physical layer.

2. **Random Access Channel(s) (RACH)** characterised by:
   - limited control information;
   - collision risk;

NOTE: the possibility to use open loop power control depends on the physical layer solution.

5.3.1 Mapping between transport channels and physical channels

The figures below depict the mapping between transport and physical channels:

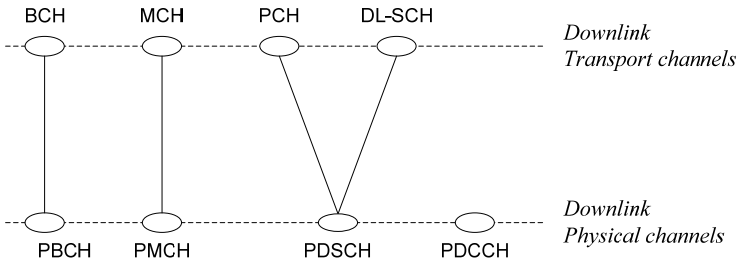

Figure 5.3.1-1: Mapping between downlink transport channels and downlink physical channels

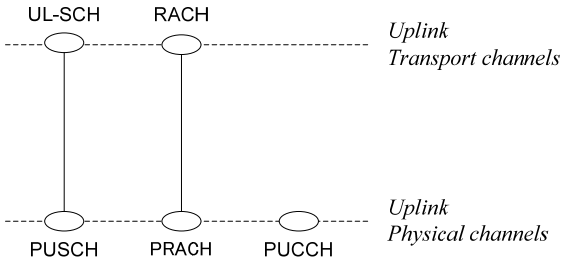

Figure 5.3.1-2: Mapping between uplink transport channels and uplink physical channels

5.4 E-UTRA physical layer model

The E-UTRAN physical layer model is captured in TS 36.302 [9].

5.4.1 Void

5.4.2 Void

6 Layer 2

Layer 2 is split into the following sublayers: Medium Access Control (MAC), Radio Link Control (RLC) and Packet Data Convergence Protocol (PDCP).

This subclause gives a high level description of the Layer 2 sub-layers in terms of services and functions. The two figures below depict the PDCP/RLC/MAC architecture for downlink and uplink, where:

- Service Access Points (SAP) for peer-to-peer communication are marked with circles at the interface between sublayers. The SAP between the physical layer and the MAC sublayer provides the transport channels. The SAPs between the MAC sublayer and the RLC sublayer provide the logical channels.
- The multiplexing of several logical channels (i.e. radio bearers) on the same transport channel (i.e. transport block) is performed by the MAC sublayer;
- In both uplink and downlink, only one transport block is generated per TTI in the non-MIMO case.

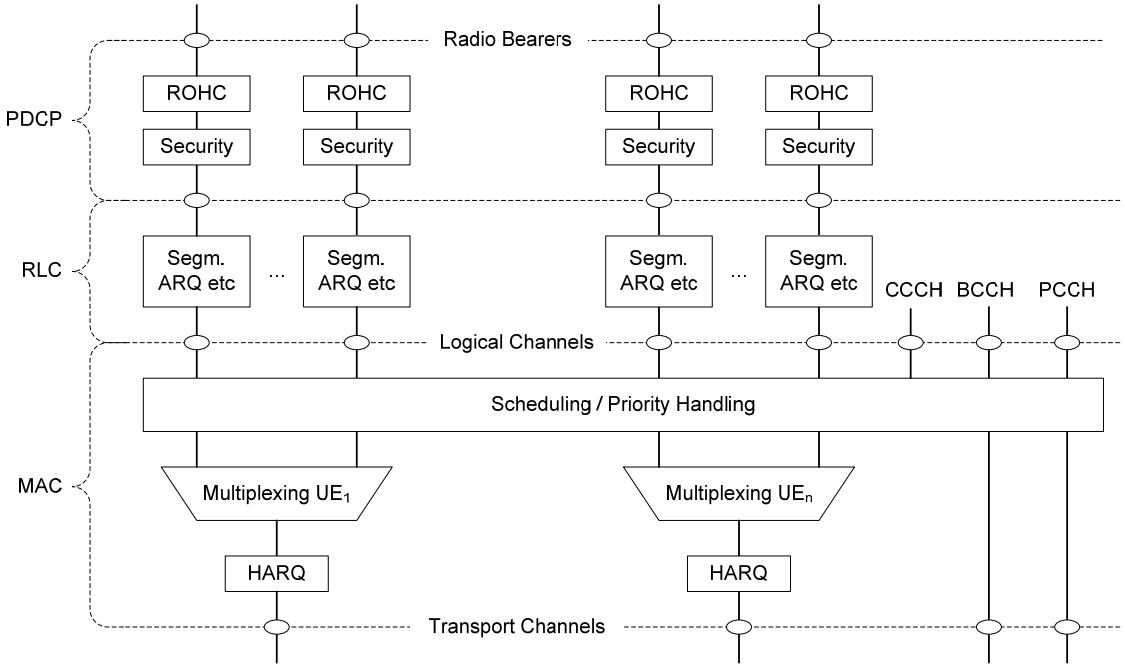

Figure 6-1: Layer 2 Structure for DL

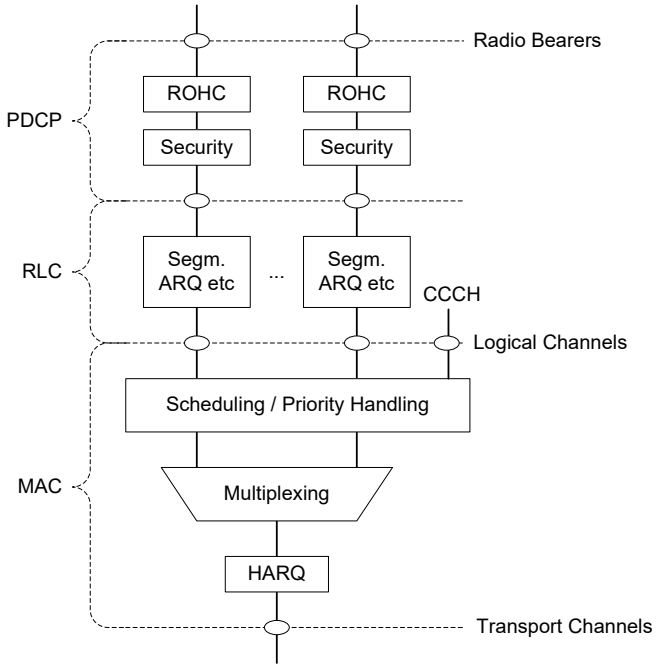

Figure 6-2: Layer 2 Structure for UL

6.1 MAC Sublayer

This subclause provides an overview on services and functions provided by the MAC sublayer.

6.1.1 Services and Functions

The main services and functions of the MAC sublayer include:

- Mapping between logical channels and transport channels;
- Multiplexing/demultiplexing of MAC SDUs belonging to one or different logical channels into/from transport blocks (TB) delivered to/from the physical layer on transport channels;
- scheduling information reporting;
- Error correction through HARQ;
- Priority handling between logical channels of one UE;
- Priority handling between UEs by means of dynamic scheduling;
- Transport format selection;
- Padding.

6.1.2 Logical Channels

Different kinds of data transfer services as offered by MAC. Each logical channel type is defined by what type of information is transferred.

A general classification of logical channels is into two groups:

- Control Channels (for the transfer of control plane information);
- Traffic Channels (for the transfer of user plane information).

There is one MAC entity per cell. MAC generally consists of several function blocks (transmission scheduling functions, per UE functions, MBMS functions, MAC control functions, transport block generation…). Transparent Mode is only applied to BCCH, CCCH and PCCH.

6.1.2.1 Control Channels

Control channels are used for transfer of control plane information only. The control channels offered by MAC are:

- **Broadcast Control Channel (BCCH)**

  A downlink channel for broadcasting system control information.

- **Paging Control Channel (PCCH)**

  A downlink channel that transfers paging information and system information change notifications. This channel is used for paging when the network does not know the location cell of the UE.

- **Common Control Channel (CCCH)**

  Channel for transmitting control information between UEs and network. This channel is used for UEs having no RRC connection with the network.

- **Multicast Control Channel (MCCH)**

  A point-to-multipoint downlink channel used for transmitting MBMS control information from the network to the UE, for one or several MTCHs. This channel is only used by UEs that receive MBMS.

NOTE: It is FFS how MBMS scheduling is transmitted by either L2/3 signalling on MCCH or L1 signalling.

- **Dedicated Control Channel (DCCH)**

  A point-to-point bi-directional channel that transmits dedicated control information between a UE and the network. Used by UEs having an RRC connection.

6.1.2.2 Traffic Channels

Traffic channels are used for the transfer of user plane information only. The traffic channels offered by MAC are:

- **Dedicated Traffic Channel (DTCH)**

  A Dedicated Traffic Channel (DTCH) is a point-to-point channel, dedicated to one UE, for the transfer of user information. A DTCH can exist in both uplink and downlink.

- **Multicast Traffic Channel (MTCH)**

  A point-to-multipoint downlink channel for transmitting traffic data from the network to the UE. This channel is only used by UEs that receive MBMS.

6.1.3 Mapping between logical channels and transport channels

6.1.3.1 Mapping in Uplink

The figure below depicts the mapping between uplink logical channels and uplink transport channels:

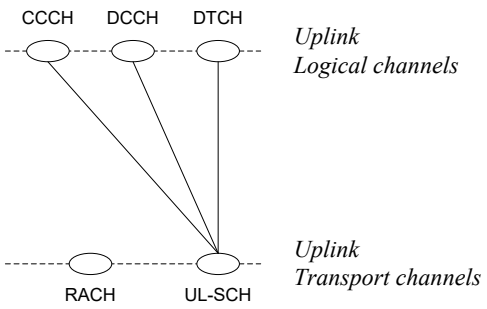

Figure 6.1.3.1-1: Mapping between uplink logical channels and uplink transport channels

In Uplink, the following connections between logical channels and transport channels exist:

- CCCH can be mapped to UL-SCH;
- DCCH can be mapped to UL- SCH;
- DTCH can be mapped to UL-SCH.

6.1.3.2 Mapping in Downlink

The figure below depicts the mapping between downlink logical channels and downlink transport channels:

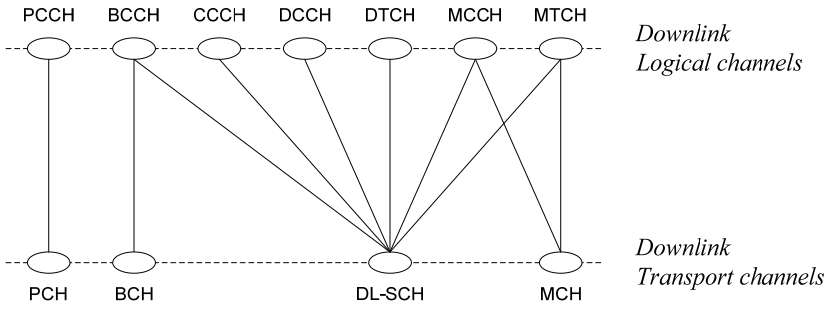

Figure 6.1.3.2-1: Mapping between downlink logical channels and downlink transport channels

In Downlink, the following connections between logical channels and transport channels exist:

- BCCH can be mapped to BCH;
- BCCH can be mapped to DL-SCH;
- PCCH can be mapped to PCH;
- CCCH can be mapped to DL-SCH;
- DCCH can be mapped to DL-SCH;
- DTCH can be mapped to DL-SCH;
- MTCH can be mapped to DL-SCH;
- MTCH can be mapped to MCH;
- MCCH can be mapped to DL-SCH;
- MCCH can be mapped to MCH.

6.2 RLC Sublayer

This subclause provides an overview on services, functions and PDU structure provided by the RLC sublayer. Note that:

- The reliability of RLC is configurable: some radio bearers may tolerate rare losses (e.g. TCP traffic);
- Radio Bearers are not characterized by a fixed sized data unit (e.g. a fixed sized RLC PDU).

6.2.1 Services and Functions

The main services and functions of the RLC sublayer include:

- Transfer of upper layer PDUs;
- Error Correction through ARQ (only for AM data transfer);
- Concatenation, segmentation and reassembly of RLC SDUs (only for UM and AM data transfer);
- Re-segmentation of RLC data PDUs (only for AM data transfer);
- In sequence delivery of upper layer PDUs (only for UM and AM data transfer);
- Duplicate detection (only for UM and AM data transfer);
- Protocol error detection and recovery;
- RLC SDU discard (only for UM and AM data transfer);
- RLC re-establishment.

6.2.2 PDU Structure

Figure 6.2.2-1 below depicts the RLC PDU structure where:

- The PDU sequence number carried by the RLC header is independent of the SDU sequence number (i.e. PDCP sequence number);
- A red dotted line indicates the occurrence of segmentation;
- Because segmentation only occurs when needed and concatenation is done in sequence, the content of an RLC PDU can generally be described by the following relations:
  - {0; 1} last segment of SDU_i + [0; n] complete SDUs + {0; 1} first segment of SDU_{i+n+1} ; or
  - 1 segment of SDU_i .

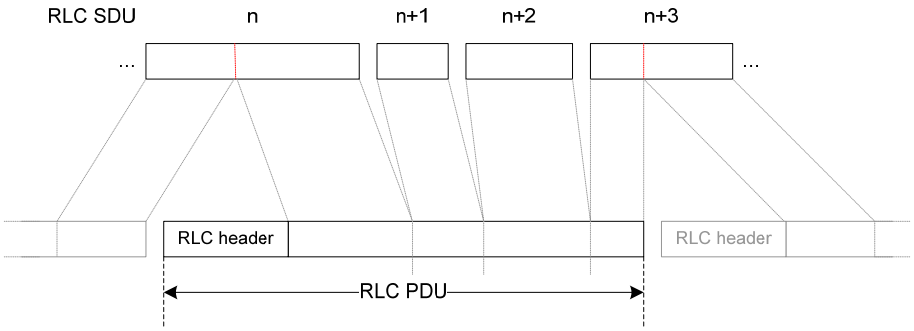

Figure 6.2.2-1: RLC PDU Structure

6.3 PDCP Sublayer

This subclause provides an overview on services, functions and PDU structure provided by the PDCP sublayer.

6.3.1 Services and Functions

The main services and functions of the PDCP sublayer for the user plane include:

- Header compression and decompression: ROHC only;
- Transfer of user data;
- In-sequence delivery of upper layer PDUs at PDCP re-establishment procedure for RLC AM;
- Duplicate detection of lower layer SDUs at PDCP re-establishment procedure for RLC AM;
- Retransmission of PDCP SDUs at handover for RLC AM;
- Ciphering and deciphering;
- Timer-based SDU discard in uplink.

NOTE: When compared to UTRAN, the *lossless DL RLC PDU size change* is not required.

The main services and functions of the PDCP for the control plane include:

- Ciphering and Integrity Protection;
- Transfer of control plane data.

6.3.2 PDU Structure

Figure 6.3.2-1 below depicts the PDCP PDU structure for user plane data, where:

- PDCP PDU and PDCP header are octet-aligned;
- PDCP header can be either 1 or 2 bytes long.

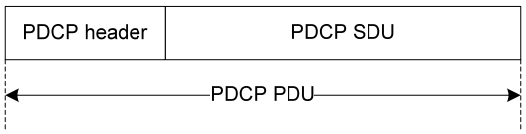

Figure 6.3.2-1: PDCP PDU Structure

The structures for control PDCP PDUs and for control plane PDCP data PDUs are specified in [15].

6.4 Void

7 RRC

This subclause provides an overview on services and functions provided by the RRC sublayer.

7.1 Services and Functions

The main services and functions of the RRC sublayer include:

- Broadcast of System Information related to the non-access stratum (NAS);
- Broadcast of System Information related to the access stratum (AS);
- Paging;
- Establishment, maintenance and release of an RRC connection between the UE and E-UTRAN including:
  - Allocation of temporary identifiers between UE and E-UTRAN;
  - Configuration of signalling radio bearer(s) for RRC connection:
    - Low priority SRB and high priority SRB.
- Security functions including key management;
- Establishment, configuration, maintenance and release of point to point Radio Bearers;
- Mobility functions including:
  - UE measurement reporting and control of the reporting for inter-cell and inter-RAT mobility;
  - Handover;
  - UE cell selection and reselection and control of cell selection and reselection;
  - Context transfer at handover.
- Notification for MBMS services;
- Establishment, configuration, maintenance and release of Radio Bearers for MBMS services;
- QoS management functions;
- UE measurement reporting and control of the reporting;
- NAS direct message transfer to/from NAS from/to UE.

7.2 RRC protocol states & state transitions

RRC uses the following states:

- **RRC_IDLE**:
  - PLMN selection;
  - DRX configured by NAS;
  - Broadcast of system information;
  - Paging;
  - Cell re-selection mobility;
  - The UE shall have been allocated an id which uniquely identifies the UE in a tracking area;
  - No RRC context stored in the eNB.
- **RRC_CONNECTED**:
  - UE has an E-UTRAN-RRC connection;
  - UE has context in E-UTRAN;

- E-UTRAN knows the cell which the UE belongs to;
- Network can transmit and/or receive data to/from UE;
- Network controlled mobility (handover and inter-RAT cell change order to GERAN with NACC);
- Neighbour cell measurements;
- At PDCP/RLC/MAC level:
  - UE can transmit and/or receive data to/from network;
  - UE monitors control signalling channel for shared data channel to see if any transmission over the shared data channel has been allocated to the UE;
  - UE also reports channel quality information and feedback information to eNB;
  - DRX period can be configured according to UE activity level for UE power saving and efficient resource utilization. This is under control of the eNB.

7.3 Transport of NAS messages

The AS provides reliable in-sequence delivery of NAS messages in a cell. During handover, message loss or duplication of NAS messages can occur.

In E-UTRAN, NAS messages are either concatenated with RRC messages or carried in RRC without concatenation.

In DL, when an EPS bearer establishment or release procedure is triggered, the NAS message should normally be concatenated with the associated RRC message. When the EPS bearer is modified and when the modification also depends on a modification of the radio bearer, the NAS message and associated RRC message should normally be concatenated. Concatenation of DL NAS with RRC message is not allowed otherwise. In uplink concatenation of NAS messages with RRC message is used only for transferring the initial NAS message during connection setup. Initial Direct Transfer is not used in E-UTRAN and no NAS message is concatenated with RRC connection request.

NOTE: NAS messages are integrity protected and ciphered by PDCP, in addition to the integrity protection and ciphering performed by NAS.

7.4 System Information

System information is divided into the *MasterInformationBlock* (MIB) and a number of *SystemInformationBlocks* (SIBs):

- *MasterInformationBlock* defines the most essential physical layer information of the cell required to receive further system information;
- *SystemInformationBlockType1* contains information relevant when evaluating if a UE is allowed to access a cell and defines the scheduling of other system information blocks;
- *SystemInformationBlockType2* contains common and shared channel information;
- *SystemInformationBlockType3* contains cell re-selection information, mainly related to the serving cell;
- *SystemInformationBlockType4* contains information about the serving frequency and intra-frequency neighbouring cells relevant for cell re-selection (including cell re-selection parameters common for a frequency as well as cell specific re-selection parameters);
- *SystemInformationBlockType5* contains information about other E-UTRA frequencies and inter-frequency neighbouring cells relevant for cell re-selection (including cell re-selection parameters common for a frequency as well as cell specific re-selection parameters);
- *SystemInformationBlockType6* contains information about UTRA frequencies and UTRA neighbouring cells relevant for cell re-selection (including cell re-selection parameters common for a frequency as well as cell specific re-selection parameters);

- *SystemInformationBlockType7* contains information about GERAN frequencies relevant for cell re-selection (including cell re-selection parameters for each frequency);
- *SystemInformationBlockType8* contains information about CDMA2000 frequencies and CDMA2000 neighbouring cells relevant for cell re-selection (including cell re-selection parameters common for a frequency as well as cell specific re-selection parameters);
- *SystemInformationBlockType9* contains a home eNB identifier (HNBID);
- *SystemInformationBlockType10* contains an ETWS primary notification;
- *SystemInformationBlockType11* contains an ETWS secondary notification.

The MIB is mapped on the BCCH and carried on BCH while all other SI messages are mapped on the BCCH and dynamically carried on DL-SCH where they can be identified through the SI-RNTI (System Information RNTI). Both the MIBand *SystemInformationBlockType1*use a fixed schedule with a periodicity of 40 and 80 ms respectively while the scheduling of other SI messages is flexible and indicated by *SystemInformationBlockType1*.

The eNB may schedule DL-SCH transmissions concerning logical channels other than BCCH in the same subframe as used for BCCH. The minimum UE capability restricts the BCCH mapped to DL-SCH e.g. regarding the maximum rate.

The Paging message is used to inform UEs in RRC_IDLE and UEs in RRC_CONNECTED about a system information change.

System information may also be provided to the UE by means of dedicated signalling e.g. upon handover.

7.5 Void

8 E-UTRAN identities

8.1 E-UTRAN related UE identities

The following E-UTRAN related UE identities are used at cell level:

- C-RNTI: unique identification used for identifying RRC Connection and scheduling;
- Semi-Persistent Scheduling C-RNTI: unique identification used for semi-persistent scheduling;
- Temporary C-RNTI: identification used for the random access procedure;
- TPC-PUSCH-RNTI: identification used for the power control of PUSCH;
- TPC-PUCCH-RNTI: identification used for the power control of PUCCH;
- Random value for contention resolution: during some transient states, the UE is temporarily identified with a random value used for contention resolution purposes.

8.2 Network entity related Identities

The following identities are used in E-UTRAN for identifying a specific network entity [25]:

- Globally Unique MME Identity (GUMMEI): used to identify MME globally. The GUMMEI is constructed from the PLMN identity the MME belongs to, the group identity of the MME group the MME belongs to and the MME code (MMEC) of the MME within the MME group.

NOTE: a UE in ECM-IDLE establishing an RRC connection has to provide the GUMMEI of its current MME to the eNB in order for the eNB to fetch the UE context from the MME. Within the S-TMSI, one field contains the code of the MME (MMEC) that allocated the S-TMSI. The code of MME is needed to ensure that the S-TMSI remains unique in a tracking area shared by multiple MMEs.

- E-UTRAN Cell Global Identifier (ECGI): used to identify cells globally. The ECGI is constructed from the PLMN identity the cell belongs to and the Cell Identity (CI) of the cell. The included PLMN is the one given by the first PLMN entry in SIB1, according to [16].
- eNB Identifier (eNB ID): used to identify eNBs within a PLMN. The eNB ID is contained within the CI of its cells.
- Global eNB ID: used to identify eNBs globally. The Global eNB ID is constructed from the PLMN identity the eNB belongs to and the eNB ID. The MCC and MNC are the same as included in the E-UTRAN Cell Global Identifier (ECGI).
- Tracking Area identity (TAI): used to identify tracking areas. The TAI is constructed from the PLMN identity the tracking area belongs to and the TAC (Tracking Area Code) of the Tracking Area.
- CSG identity (CSG ID): used to identify a CSG within a PLMN.
- EPS Bearer ID / E-RAB ID:
  - The value of the E-RAB ID used at S1 and X2 interfaces to identify an E-RAB allocated to the UE is the same as the EPS Bearer ID value used at the Uu interface to identify the associated EPS Bearer (and also used at the NAS layer as defined in [25]).

The following identities are broadcast in every E-UTRAN cell (SIB1): CI, TAC, CSG ID (if any) and one or more PLMN identities.

9 ARQ and HARQ

E-UTRAN provides ARQ and HARQ functionalities. The ARQ functionality provides error correction by retransmissions in acknowledged mode at Layer 2. The HARQ functionality ensures delivery between peer entities at Layer 1.

9.1 HARQ principles

The HARQ within the MAC sublayer has the following characteristics:

- N-process Stop-And-Wait;
- HARQ transmits and retransmits transport blocks;
- In the downlink:
  - Asynchronous adaptive HARQ;
  - Uplink ACK/NAKs in response to downlink (re)transmissions are sent on PUCCH or PUSCH;
  - PDCCH signals the HARQ process number and if it is a transmission or retransmission;
  - Retransmissions are always scheduled through PDCCH.
- In the uplink:
  - Synchronous HARQ;
  - Maximum number of retransmissions configured per UE (as opposed to per radio bearer);
  - Downlink ACK/NAKs in response to uplink (re)transmissions are sent on PHICH;
  - HARQ operation in uplink is governed by the following principles (summarized in Table 9.1-1):
    1) Regardless of the content of the HARQ feedback (ACK or NACK), when a PDCCH for the UE is correctly received, the UE follows what the PDCCH asks the UE to do i.e. perform a transmission or a retransmission (referred to as adaptive retransmission);

2) When no PDCCH addressed to the C-RNTI of the UE is detected, the HARQ feedback dictates how the UE performs retransmissions:

   - NACK: the UE performs a non-adaptive retransmission i.e. a retransmission on the same uplink resource as previously used by the same process;

   - ACK: the UE does not perform any UL (re)transmission and keeps the data in the HARQ buffer. A PDCCH is then required to perform a retransmission i.e. a non-adaptive retransmission cannot follow.

- Measurement gaps are of higher priority than HARQ retransmissions: whenever an HARQ retransmission collides with a measurement gap, the HARQ retransmission does not take place.

Table 9.1-1: UL HARQ Operation

HARQ feedback seen by the UE	PDCCH seen by the UE	UE behaviour
ACK or NACK	New Transmission	New transmission according to PDCCH
ACK or NACK	Retransmission	Retransmission according to PDCCH (adaptive retransmission)
ACK	None	No (re)transmission, keep data in HARQ buffer and a PDDCH is required to resume retransmissions
NACK	None	Non-adaptive retransmission

9.2 ARQ principles

The ARQ within the RLC sublayer has the following characteristics:

- ARQ retransmits RLC PDUs or RLC PDU segments based on RLC status reports;

- Polling for RLC status report is used when needed by RLC;

- RLC receiver can also trigger RLC status report after detecting a missing RLC PDU or RLC PDU segment.

9.3 Void

10 Mobility

Load balancing is achieved in E-UTRAN with redirection mechanisms (upon RRC establishment, in RRC_CONNECTED and upon RRC release) and through the usage of inter-frequency and inter-RAT absolute priorities and inter-frequency Qoffset parameters.

Measurements to be performed by a UE for mobility are classified in at least three measurement types:

- Intra-frequency E-UTRAN measurements;

- Inter-frequency E-UTRAN measurements;

- Inter-RAT measurements for UTRAN and GERAN;

- Inter-RAT measurements of CDMA2000 HRPD or 1xRTT frequencies.

For each measurement type a measurement identity is used by E-UTRAN when configuring measurements as well as by the UE when reporting results of the measurements. Measurement quantities and reporting events are considered separately for each measurement type. Measurement commands are used by E-UTRAN to order the UE to start measurements, modify measurements or stop measurements. Three reporting criteria are used: event triggered reporting, periodic reporting and event triggered periodic reporting.

10.1 Intra E-UTRAN

In E-UTRAN RRC_CONNECTED state, network-controlled UE-assisted handovers are performed and various DRX cycles are supported.

In E-UTRAN RRC_IDLE state, cell reselections are performed and DRX is supported.

10.1.1 Mobility Management in ECM-IDLE

10.1.1.1 Cell selection

The principles of PLMN selection in E-UTRA are based on the 3GPP PLMN selection principles. Cell selection is required on transition from EMM_DETACHED to EMM-REGISTERED and from ECM-IDLE or ECM-CONNECTED.

Cell selection:

- The UE NAS identifies a selected PLMN and equivalent PLMNs;
- The UE searches the E-UTRA frequency bands and for each carrier frequency identifies the strongest cell. It reads cell system information broadcast to identify its PLMN(s):
  - The UE may search each carrier in turn ("initial cell selection") or make use of stored information to shorten the search ("stored information cell selection").
- The UE seeks to identify a suitable cell; if it is not able to identify a suitable cell it seeks to identify an acceptable cell. When a suitable cell is found or if only an acceptable cell is found it camps on that cell and commence the cell reselection procedure:
  - A suitable cell is one for which the measured cell attributes satisfy the cell selection criteria; the cell PLMN is the selected PLMN, registered or an equivalent PLMN; the cell is not barred or reserved and the cell is not part of a tracking area which is in the list of "forbidden tracking areas for roaming";
  - An acceptable cell is one for which the measured cell attributes satisfy the cell selection criteria and the cell is not barred;

Transition to RRC_IDLE:

On transition from RRC_CONNECTED to RRC_IDLE, a UE should camp on the last cell for which it was in RRC_CONNECTED or a cell/any cell of set of cells or frequency be assigned by RRC in the state transition message.

Recovery from out of coverage:

The UE should attempt to find a suitable cell in the manner described for stored information or initial cell selection above. If no suitable cell is found on any frequency or RAT the UE should attempt to find an acceptable cell.

10.1.1.2 Cell reselection

UE in RRC_IDLE performs cell reselection. The principles of the procedure are the following:

- The UE makes measurements of attributes of the serving and neighbour cells to enable the reselection process:
  - There is no need to indicate neighbouring cell in the serving cell system information to enable the UE to search and measure a cell i.e. E-UTRAN relies on the UE to detect the neighbouring cells;
  - For the search and measurement of inter-frequency neighbouring cells, only the carrier frequencies need to be indicated;
  - Measurements may be omitted if the serving cell attribute fulfils particular search or measurement criteria.
- Cell reselection identifies the cell that the UE should camp on. It is based on cell reselection criteria which involves measurements of the serving and neighbour cells:

- Intra-frequency reselection is based on ranking of cells;
- Inter-frequency reselection is based on absolute priorities where UE tries to camp on highest priority frequency available. Absolute priorities for reselection are provided only by the RPLMN and valid only within the RPLMN; priorities are given by the system information and valid for all UEs in a cell, specific priorities per UE can be signalled in the RRC Connection Release message. A validity time can be associated with UE specific priorities.
- For inter-frequency neighbouring cells, it is possible to indicate layer-specific cell reselection parameters (e.g., layer specific offset). These parameters are common to all neighbouring cells on a frequency;
- An NCL can be provided by the serving cell to handle specific cases for intra- and inter-frequency neighbouring cells. This NCL contains cell specific cell reselection parameters (e.g., cell specific offset) for specific neighbouring cells;
- Black lists can be provided to prevent the UE from reselecting to specific intra- and inter-frequency neighbouring cells;
- Cell reselection can be speed dependent (speed detection based on UTRAN solution);
- Cell reselection parameters are applicable for all UEs in a cell, but it is possible to configure specific reselection parameters per UE group or per UE.

Cell access restrictions apply as for UTRAN, which consist of access class (AC) barring and cell reservation (e.g. for cells "reserved for operator use") applicable for mobiles in RRC_IDLE mode.

10.1.1.3 Void

10.1.1.4 Void

10.1.1.5 Void

10.1.2 Mobility Management in ECM-CONNECTED

The Intra-E-UTRAN-Access Mobility Support for UEs in ECM-CONNECTED handles all necessary steps for relocation/handover procedures, like processes that precede the final HO decision on the source network side (control and evaluation of UE and eNB measurements taking into account certain UE specific area restrictions), preparation of resources on the target network side, commanding the UE to the new radio resources and finally releasing resources on the (old) source network side. It contains mechanisms to transfer context data between evolved nodes, and to update node relations on C-plane and U-plane.

In E-UTRAN RRC_CONNECTED state, network-controlled UE-assisted handovers are performed and various DRX cycles are supported:

The UE makes measurements of attributes of the serving and neighbour cells to enable the process:

- There is no need to indicate neighbouring cell to enable the UE to search and measure a cell i.e. E-UTRAN relies on the UE to detect the neighbouring cells;
- For the search and measurement of inter-frequency neighbouring cells, at least the carrier frequencies need to be indicated;
- Network signals reporting criteria for event-triggered and periodical reporting;
- An NCL can be provided by the serving cell to handle specific cases for intra- and inter-frequency neighbouring cells. This NCL containa cell specific cell reselection parameters (e.g. cell specific offset) for specific neighbouring cells;
- Black lists can be provided to prevent the UE from measuring specific neighbouring cells.

Depending on whether the UE needs transmission/reception gaps to perform the relevant measurements, measurements are classified as gap assisted or non-gap assisted. A non-gap assisted measurement is a measurement on a cell that does not require transmission/reception gaps to allow the measurement to be performed. A gap assisted measurement is a

measurement on a cell that does require transmission/reception gaps to allow the measurement to be performed. Gap patterns (as opposed to individual gaps) are configured and activated by RRC.

10.1.2.1 Handover

The intra E-UTRAN HO in RRC_CONNECTED state is UE assisted NW controlled HO, with HO preparation signalling in E-UTRAN:

- Part of the HO command comes from the target eNB and is transparently forwarded to the UE by the source eNB;
- To prepare the HO, the source eNB passes all necessary information to the target eNB (e.g. E-RAB attributes and RRC context);
- Both the source eNB and UE keep some context (e.g. C-RNTI) to enable the return of the UE in case of HO failure;
- UE accesses the target cell via RACH following a contention-free procedure using a dedicated RACH preamble or following a contention-based procedure if dedicated RACH preambles are not available:
  - the UE uses the dedicated preamble until the handover procedure is finished (successfully or unsuccessfully);
- If the RACH procedure towards the target cell is not successful within a certain time, the UE initiates radio link failure recovery using the best cell;
- No ROHC context is transferred at handover.

10.1.2.1.1 C-plane handling

The HO procedure is performed without EPC involvement, i.e. preparation messages are directly exchanged between the eNBs. The release of the resources at the source side during the HO completion phase is triggered by the eNB. The figure below depicts the basic handover scenario where neither MME nor Serving Gateway changes:

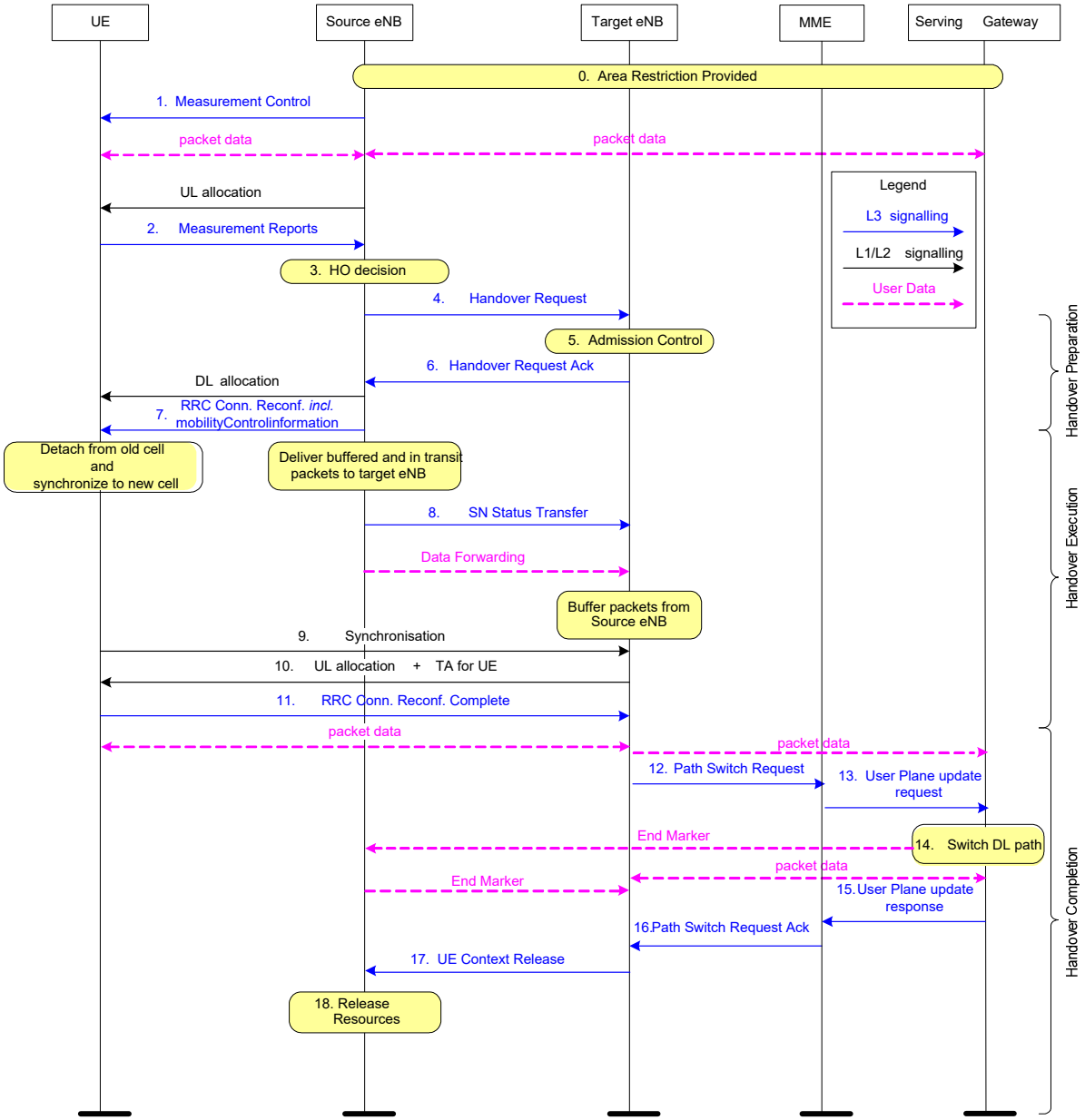

Figure 10.1.2.1.1-1: Intra-MME/Serving Gateway HO

Below is a more detailed description of the intra-MME/Serving Gateway HO procedure:

0 The UE context within the source eNB contains information regarding roaming restrictions which where provided either at connection establishment or at the last TA update.

1 The source eNB configures the UE measurement procedures according to the area restriction information. Measurements provided by the source eNB may assist the function controlling the UE's connection mobility.

2 UE is triggered to send MEASUREMENT REPORT by the rules set by i.e. system information, specification etc.

3 Source eNB makes decision based on MEASUREMENT REPORT and RRM information to hand off UE.

4 The source eNB issues a HANDOVER REQUEST message to the target eNB passing necessary information to prepare the HO at the target side (UE X2 signalling context reference at source eNB, UE S1 EPC signalling context reference, target cell ID, K_{eNB*}, RRC context including the C-RNTI of the UE in the source eNB, AS-configuration, E-RAB context and physical layer ID of the source cell + MAC for possible RLF recovery). UE X2 / UE S1 signalling references enable the target eNB to address the source eNB and the EPC. The E-RAB context includes necessary RNL and TNL addressing information, and QoS profiles of the E-RABs.

5 Admission Control may be performed by the target eNB dependent on the received E-RAB QoS information to increase the likelihood of a successful HO, if the resources can be granted by target eNB. The target eNB configures the required resources according to the received E-RAB QoS information and reserves a C-RNTI and optionally a RACH preamble. The AS-configuration to be used in the target cell can either be specified independently (i.e. an "establishment") or as a delta compared to the AS-configuration used in the source cell (i.e. a "reconfiguration").

6 Target eNB prepares HO with L1/L2 and sends the HANDOVER REQUEST ACKNOWLEDGE to the source eNB. The HANDOVER REQUEST ACKNOWLEDGE message includes a transparent container to be sent to the UE as an RRC message to perform the handover. The container includes a new C-RNTI, target eNB security algorithm identifiers for the selected security algorithms, may include a dedicated RACH preamble, and possibly some other parameters i.e. access parameters, SIBs, etc. The HANDOVER REQUEST ACKNOWLEDGE message may also include RNL/TNL information for the forwarding tunnels, if necessary.

NOTE: As soon as the source eNB receives the HANDOVER REQUEST ACKNOWLEDGE, or as soon as the transmission of the handover command is initiated in the downlink, data forwarding may be initiated.

Steps 7 to 16 provide means to avoid data loss during HO and are further detailed in 10.1.2.1.2 and 10.1.2.3.

7 The target eNB generates the RRC message to perform the handover, i.e *RRCConnectionReconfiguration* message including the *mobilityControlInformation*, to be sent by the source eNB towards the UE. The source eNB performs the necessary integrity protection and ciphering of the message. The UE receives the *RRCConnectionReconfiguration* message with necessary parameters (i.e. new C-RNTI, target eNB security algorithm identifiers, and optionally dedicated RACH preamble, target eNB SIBs, etc.) and is commanded by the source eNB to perform the HO. The UE does not need to delay the handover execution for delivering the HARQ/ARQ responses to source eNB.

8 The source eNB sends the SN STATUS TRANSFER message to the target eNB to convey the uplink PDCP SN receiver status and the downlink PDCP SN transmitter status of E-RABs for which PDCP status preservation applies (i.e. for RLC AM). The uplink PDCP SN receiver status includes at least the PDCP SN of the first missing UL SDU and may include a bit map of the receive status of the out of sequence UL SDUs that the UE needs to retransmit in the target cell, if there are any such SDUs. The downlink PDCP SN transmitter status indicates the next PDCP SN that the target eNB shall assign to new SDUs, not having a PDCP SN yet. The source eNB may omit sending this message if none of the E-RABs of the UE shall be treated with PDCP status preservation.

9 After receiving the *RRCConnectionReconfiguration* message including the *mobilityControlInformation* , UE performs synchronisation to target eNB and accesses the target cell via RACH, following a contention-free procedure if a dedicated RACH preamble was indicated in the *mobilityControlInformation*, or following a contention-based procedure if no dedicated preamble was indicated. UE derives target eNB specific keys and configures the selected security algorithms to be used in the target cell.

10 The target eNB responds with UL allocation and timing advance.

11 When the UE has successfully accessed the target cell, the UE sends the *RRCConnectionReconfigurationComplete* message (C-RNTI) to confirm the handover, along with an uplink Buffer Status Report, whenever possible, to the target eNB to indicate that the handover procedure is completed for the UE. The target eNB verifies the C-RNTI sent in the *RRCConnectionReconfigurationComplete* message. The target eNB can now begin sending data to the UE.

12 The target eNB sends a PATH SWITCH message to MME to inform that the UE has changed cell.

13 The MME sends an UPDATE USER PLANE REQUEST message to the Serving Gateway.

14 The Serving Gateway switches the downlink data path to the target side. The Serving gateway sends one or more "end marker" packets on the old path to the source eNB and then can release any U-plane/TNL resources towards the source eNB.

15 Serving Gateway sends an UPDATE USER PLANE RESPONSE message to MME.

16 The MME confirms the PATH SWITCH message with the PATH SWITCH ACKNOWLEDGE message.

17 By sending UE CONTEXT RELEASE, the target eNB informs success of HO to source eNB and triggers the release of resources by the source eNB. The target eNB sends this message after the PATH SWITCH ACKNOWLEDGE message is received from the MME.

18 Upon reception of the UE CONTEXT RELEASE message, the source eNB can release radio and C-plane related resources associated to the UE context. Any ongoing data forwarding may continue.

10.1.2.1.2 U-plane handling

The U-plane handling during the Intra-E-UTRAN-Access mobility activity for UEs in ECM-CONNECTED takes the following principles into account to avoid data loss during HO:

- During HO preparation U-plane tunnels can be established between the source eNB and the target eNB. There is one tunnel established for uplink data forwarding and another one for downlink data forwarding for each E-RAB for which data forwarding is applied.
- During HO execution, user data can be forwarded from the source eNB to the target eNB. The forwarding may take place in a service and deployment dependent and implementation specific way.
  - Forwarding of downlink user data from the source to the target eNB should take place in order as long as packets are received at the source eNB from the EPC or the source eNB buffer has not been emptied.
- During HO completion:
  - The target eNB sends a PATH SWITCH message to MME to inform that the UE has gained access and MME sends a USER PLANE UPDATE REQUEST message to the Serving Gateway, the U-plane path is switched by the Serving Gateway from the source eNB to the target eNB.
  - The source eNB should continue forwarding of U-plane data as long as packets are received at the source eNB from the Serving Gateway or the source eNB buffer has not been emptied.

For **RLC-AM bearers**:

- For in-sequence delivery and duplication avoidance, PDCP SN is maintained on a bearer basis and the source eNB informs the target eNB about the next DL PDCP SN to allocate to a packet which does not have a PDCP sequence number yet (either from source eNB or from the Serving Gateway).
- For security synchronisation, HFN is also maintained and the source eNB provides to the target one reference HFN for the UL and one for the DL i.e. HFN and corresponding SN.
- In both the UE and the target eNB, a window-based mechanism is needed for duplication detection.
- The occurrence of duplicates over the air interface in the target eNB is minimised by means of PDCP SN based reporting at the target eNB by the UE. In uplink, the reporting is optionally configured on a bearer basis by the eNB and the UE should first start by transmitting those reports when granted resources in the target eNB. In downlink, the eNB is free to decide when and for which bearers a report is sent and the UE does not wait for the report to resume uplink transmission.
- The target eNB re-transmits and prioritizes all downlink PDCP SDUs forwarded by the source eNB (i.e. the target eNB should send data with PDCP SNs from X2 before sending data from S1), with the exception of PDCP SDUs of which the reception was acknowledged through PDCP SN based reporting by the UE.
- The UE re-transmits in the target eNB all uplink PDCP SDUs starting from the first PDCP SDU following the last consecutively confirmed PDCP SDU i.e. the oldest PDCP SDU that has not been acknowledged at RLC in the source, excluding the PDCP SDUs of which the reception was acknowledged through PDCP SN based reporting by the target.

For **RLC-UM bearers**:

- The PDCP SN and HFN are reset in the target eNB.
- No PDCP SDUs are retransmitted in the target eNB.
- The target eNB prioritize all downlink PDCP SDUs forwarded by the source eNB if any (i.e. the target eNB should send data with PDCP SNs from X2 before sending data from S1),.
- The UE PDCP entity does not attempt to retransmit any PDCP SDU in the target cell for which transmission had been completed in the source cell. Instead UE PDCP entity starts the transmission with other PDCP SDUs.

10.1.2.2 Path Switch

After the downlink path is switched at the Serving GW downlink packets on the forwarding path and on the new direct path may arrive interchanged at the target eNB. The target eNodeB should first deliver all forwarded packets to the UE before delivering any of the packets received on the new direct path. The method employed in the target eNB to enforce the correct delivery order of packets is outside the scope of the standard.

In order to assist the reordering function in the target eNB, the Serving GW shall send one or more "end marker" packets on the old path immediately after switching the path for each E-RAB of the UE. The "end marker" packet shall not contain user data. The "end marker" is indicated in the GTP header. After completing the sending of the tagged packets the GW shall not send any further user data packets via the old path.

Upon receiving the "end marker" packets, the source eNB shall, if forwarding is activated for that bearer, forward the packet toward the target eNB.

On detection of an "end marker" the target eNB shall discard the end marker packet and initiate any necessary processing to maintain in sequence delivery of user data forwarded over X2 interface and user data received from the serving GW over S1 as a result of the path switch.

On detection of the "end marker", the target eNB may also initiate the release of the data forwarding resource. However, the release of the data forwarding resource is implementation dependent and could also be based on other mechanisms (e.g. timer-based mechanism).

EPC may change the uplink end-point of the tunnels with Path Switch procedure. However, the EPC should keep the old GTP tunnel end-point(s) sufficiently long time in order to minimise the probability of packet losses and avoid unintentional release of respective E-RAB(s).

10.1.2.3 Data forwarding

10.1.2.3.1 For RLC-AM DRBs

Upon handover, the source eNB may forward in order to the target eNB all downlink PDCP SDUs with their SN that have not been acknowledged by the UE. In addition, the source eNB may also forward without a PDCP SN fresh data arriving over S1 to the target eNB.

NOTE: Target eNB does not have to wait for the completion of forwarding from the source eNB before it begins transmitting packets to the UE.

The source eNB discards any remaining downlink RLC PDUs. Correspondingly, the source eNB does not forward the downlink RLC context to the target eNB.

NOTE: Source eNB does not need to abort on going RLC transmissions with the UE as it starts data forwarding to the target eNB.

Upon handover, the source eNB forwards to the Serving Gateway the uplink PDCP SDUs successfully received in-sequence until the sending of the Status Transfer message to the target eNB. Then at that point of time the source eNB stops delivering uplink PDCP SDUs to the S-GW and shall discard any remaining uplink RLC PDUs. Correspondingly, the source eNB does not forward the uplink RLC context to the target eNB.

Then the source eNB shall either:

- discard the uplink PDCP SDUs received out of sequence if the source eNB has not accepted the request from the target eNB for uplink forwarding or if the target eNB has not requested uplink forwarding for the bearer during the Handover Preparation procedure,
- forward to the target eNB the uplink PDCP SDUs received out of sequence if the source eNB has accepted the request from the target eNB for uplink forwarding for the bearer during the Handover Preparation procedure.

The PDCP SN of forwarded SDUs is carried in the "PDCP PDU number" field of the GTP-U extension header. The target eNB shall use the PDCP SN if it is available in the forwarded GTP-U packet.

In-sequence delivery of upper layer PDUs during handover is based on a continuous PDCP SN and is provided by the "in-order delivery and duplicate elimination" function at the PDCP layer:

- in the downlink, the "in-order delivery and duplicate elimination" function at the UE PDCP layer guarantees in-sequence delivery of downlink PDCP SDUs;
- in the uplink, the "in-order delivery and duplicate elimination" function at the target eNB PDCP layer guarantees in-sequence delivery of uplink PDCP SDUs.

After handover, when the UE receives a PDCP SDU from the target eNB, it can deliver it to higher layer together with all PDCP SDUs with lower SNs regardless of possible gaps.

10.1.2.3.2 For RLC-UM DRBs

Upon handover, the source eNB does not forward to the target eNB downlink PDCP SDUs for which transmission had been completed in the source cell. PDCP SDUs that have not been transmitted may be forwarded. In addition, the source eNB may forward fresh downlink data arriving over S1 to the target eNB. The source eNB discards any remaining downlink RLC PDUs. Correspondingly, the source eNB does not forward the downlink RLC context to the target eNB.

Upon handover, the source eNB forwards all uplink PDCP SDUs successfully received to the Serving Gateway (i.e. including the ones received out of sequence) and discards any remaining uplink RLC PDUs. Correspondingly, the source eNB does not forward the uplink RLC context to the target eNB.

10.1.2.3.3 SRB handling

With respect to SRBs, the following principles apply at HO:

- No forwarding or retransmissions of RRC messages in the target;
- The PDCP SN and HFN are reset in the target.

10.1.2.4 Void

10.1.2.5 Void

10.1.2.6 Void

10.1.2.7 Timing Advance

In RRC_CONNECTED, the eNB is responsible for maintaining the timing advance. In some cases (e.g. during DRX), the timing advance is not necessarily always maintained and the MAC sublayer knows if the L1 is synchronised and which procedure to use to start transmitting in the uplink:

- as long as the L1 is non-synchronised, uplink transmission can only take place on PRACH.

For one UE, cases where the UL synchronisation status moves from "synchronised" to "non-synchronised" include:

- Expiration of a timer;
- Non-synchronised handover;

The value of the timer is either UE specific and managed through dedicated signalling between the UE and the eNB, or cell specific and indicated via broadcast information. In both cases, the timer is normally restarted whenever a new timing advance is given by the eNB:

- restarted to a UE specific value if any; or
- restarted to a cell specific value otherwise.

Upon DL data arrival, dedicated signature on PRACH can be allocated by the eNB to UE. When a dedicated signature on PRACH is allocated, the UE shall perform the corresponding random access procedure regardless of its L1 synchronisation status.

Timing advance updates are signalled by the eNB to the UE in MAC PDUs addressed via C-RNTI.

10.1.3 Measurements

Measurements to be performed by a UE for intra/inter-frequency mobility can be controlled by E-UTRAN, using broadcast or dedicated control. In RRC_IDLE state, a UE shall follow the measurement parameters defined for cell reselection specified by the E-UTRAN broadcast. The use of dedicated measurement control for RRC_IDLE state is possible through the provision of UE specific priorities (see sub-clause 10.2.4). In RRC_CONNECTED state, a UE shall follow the measurement configurations specified by RRC directed from the E-UTRAN (e.g. as in UTRAN MEASUREMENT_CONTROL).

Intra-frequency neighbour (cell) measurements and inter-frequency neighbour (cell) measurements are defined as follows:

- Intra-frequency neighbour (cell) measurements: Neighbour cell measurements performed by the UE are intra-frequency measurements when the current and target cell operates on the same carrier frequency. The UE shall be able to carry out such measurements without measurement gaps.
- Inter-frequency neighbour (cell) measurements: Neighbour cell measurements performed by the UE are inter-frequency measurements when the neighbour cell operates on a different carrier frequency, compared to the current cell. The UE should not be assumed to be able to carry out such measurements without measurement gaps.

Whether a measurement is non gap assisted or gap assisted depends on the UE's capability and current operating frequency. The UE determines whether a particular cell measurement needs to be performed in a transmission/reception gap and the scheduler needs to know whether gaps are needed:

- Same carrier frequency and cell bandwidths (Scenario A): an intra-frequency scenario; not measurement gap assisted.
- Same carrier frequency, bandwidth of the target cell smaller than the bandwidth of the current cell (Scenario B): an intra-frequency scenario; not measurement gap assisted.
- Same carrier frequency, bandwidth of the target cell larger than the bandwidth of the current cell (Scenario C): an intra-frequency scenario; not measurement gap assisted.
- Different carrier frequencies, bandwidth of the target cell smaller than the bandwidth of the current cell and bandwidth of the target cell within bandwidth of the current cell (Scenario D): an inter-frequency scenario; measurement gap-assisted scenario.
- Different carrier frequencies, bandwidth of the target cell larger than the bandwidth of the current cell and bandwidth of the current cell within bandwidth of the target cell (Scenario E): an inter-frequency scenario; measurement gap-assisted scenario.
- Different carrier frequencies and non-overlapping bandwidth, (Scenario F): an inter-frequency scenario; measurement gap-assisted scenario.

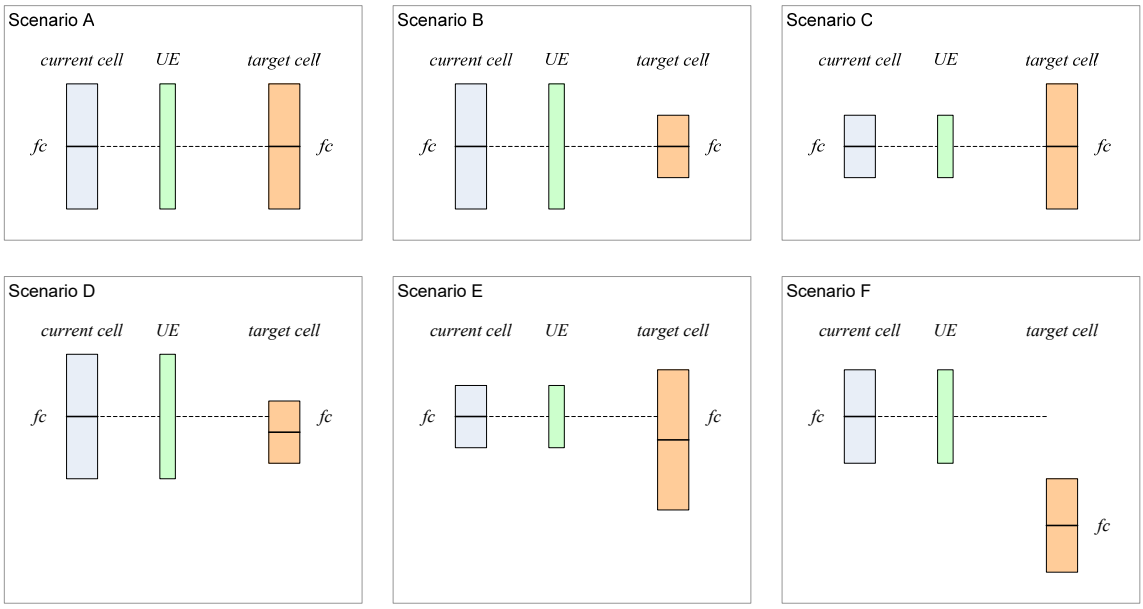

Figure 10.1.3-1: Inter and Intra-frequency measurements scenarios

Measurement gaps patterns are configured and activated by RRC.

10.1.3.1 Intra-frequency neighbour (cell) measurements

In a system with frequency reuse = 1, mobility within the same frequency layer (i.e. between cells with the same carrier frequency) is predominant. Good neighbour cell measurements are needed for cells that have the same carrier frequency as the serving cell in order to ensure good mobility support and easy network deployment. Search for neighbour cells with the same carrier frequency as the serving cell, and measurements of the relevant quantities for identified cells are needed.

NOTE: To avoid UE activity outside the DRX cycle, the reporting criteria for neighbour cell measurements should match the used DRX cycle.

10.1.3.2 Inter-frequency neighbour (cell) measurements

Regarding mobility between different frequency layers (i.e. between cells with a different carrier frequency), UE may need to perform neighbour cell measurements during DL/UL idle periods that are provided by DRX or packet scheduling (i.e. gap assisted measurements).

10.1.4 Paging and C-plane establishment

Paging groups (where multiple UEs can be addressed) are used on PDCCH:

- Precise UE identity is found on PCH;
- DRX configurable via BCCH and NAS;
- Only one subframe allocated per paging interval per UE;
- The network may divide UEs to different paging occasions in time;
- There is no grouping within paging occasion;
- One paging RNTI for PCH.

10.1.5 Random Access Procedure

The random access procedure is characterized by:

- Common procedure for FDD and TDD;
- One procedure irrespective of cell size;

The random access procedure is performed for the following five events:

- Initial access from RRC_IDLE;
- RRC Connection Re-establishment procedure;
- Handover;
- DL data arrival during RRC_CONNECTED requiring random access procedure;
  - E.g. when UL synchronisation status is “non-synchronised”;
- UL data arrival during RRC_CONNECTED requiring random access procedure;
  - E.g. when UL synchronisation status is "non-synchronised" or there are no PUCCH resources for SR available.

Furthermore, the random access procedure takes two distinct forms:

- Contention based (applicable to all five events);
- Non-contention based (applicable to only handover and DL data arrival).

Normal DL/UL transmission can take place after the random access procedure.

10.1.5.1 Contention based random access procedure

The contention based random access procedure is outlined on Figure 10.1.5.1-1 below:

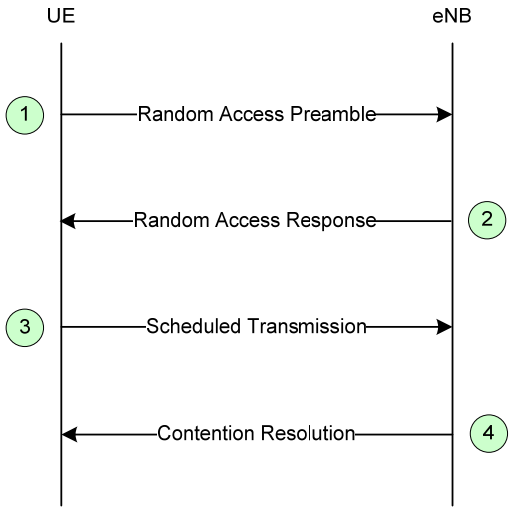

Figure 10.1.5.1-1: Contention based Random Access Procedure

The four steps of the contention based random access procedures are:

1) Random Access Preamble on RACH in uplink:
   - There are two possible groups defined and one is optional. If both groups are configured the size of message 3 and the pathloss are used to determine which group a preamble is selected from. The group to which a preamble belongs provides an indication of the size of the message 3 and the radio conditions at the UE. The preamble group information along with the necessary thresholds are broadcast on system information.
2) Random Access Response generated by MAC on DL-SCH:

- Semi-synchronous (within a flexible window of which the size is one or more TTI) with message 1;
- No HARQ;
- Addressed to RA-RNTI on PDCCH;
- Conveys at least RA-preamble identifier, Timing Alignment information, initial UL grant and assignment of Temporary C-RNTI (which may or may not be made permanent upon Contention Resolution);
- Intended for a variable number of UEs in one DL-SCH message.

3) First scheduled UL transmission on UL-SCH:
   - Uses HARQ;
   - Size of the transport blocks depends on the UL grant conveyed in step 2 and is at least 80 bits.
   - For initial access:
     - Conveys the RRC Connection Request generated by the RRC layer and transmitted via CCCH;
     - Conveys at least NAS UE identifier but no NAS message;
     - RLC TM: no segmentation;
   - For RRC Connection Re-establishment procedure:
     - Conveys the RRC Connection Re-establishment Request generated by the RRC layer and transmitted via CCCH;
     - RLC TM: no segmentation;
     - Does not contain any NAS message.
   - After handover, in the target cell:
     - Conveys the ciphered and integrity protected RRC Handover Confirm generated by the RRC layer and transmitted via DCCH;
     - Conveys the C-RNTI of the UE (which was allocated via the Handover Command);
     - Includes an uplink Buffer Status Report when possible.
   - For other events:
     - Conveys at least the C-RNTI of the UE.

4) Contention Resolution on DL:
   - Early contention resolution shall be used i.e. eNB does not wait for NAS reply before resolving contention
   - Not synchronised with message 3;
   - HARQ is supported;
   - Addressed to:
     - The Temporary C-RNTI on PDCCH for initial access and after radio link failure;
     - The C-RNTI on PDCCH for UE in RRC_CONNECTED;
   - HARQ feedback is transmitted only by the UE which detects its own UE identity, as provided in message 3, echoed in the Contention Resolution message;
   - For initial access and RRC Connection Re-establishment procedure, no segmentation is used (RLC-TM).

The Temporary C-RNTI is promoted to C-RNTI for a UE which detects RA success and does not already have a C-RNTI; it is dropped by others. A UE which detects RA success and already has a C-RNTI, resumes using its C-RNTI.

10.1.5.2 Non-contention based random access procedure

The non-contention based random access procedure is outlined on Figure 10.1.5.2-1 below:

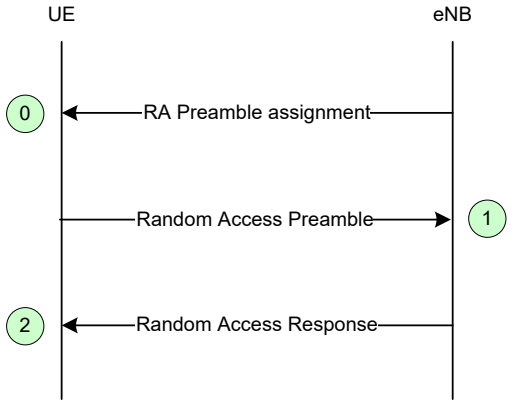

Figure 10.1.5.2-1: Non-contention based Random Access Procedure

The three steps of the non-contention based random access procedures are:

0) Random Access Preamble assignment via dedicated signalling in DL:
   - eNB assigns to UE a non-contention Random Access Preamble (a Random Access Preamble not within the set broadcasted on BCH).
   - Signalled via:
     - HO command generated by target eNB and sent via source eNB for handover;
     - PDCCH in case of DL data arrival.
1) Random Access Preamble on RACH in uplink:
   - UE transmits the assigned non-contention Random Access Preamble.
2) Random Access Response on DL-SCH:
   - Semi-synchronous (within a flexible window of which the size is one or more TTI) with message 1;
   - No HARQ;
   - Addressed to RA-RNTI on PDCCH;
   - Conveys at least:
     - Timing Alignment information and initial UL grant for handover;
     - Timing Alignment information for DL data arrival;
     - RA-preamble identifier.
     - Intended for one or multiple UEs in one DL-SCH message.

10.1.5.3 Interaction model between L1 and L2/3 for Random Access Procedure

Random access procedure described above is modelled in Figure 10.1.5.3-1 below from L1 and L2/3 interaction point of view. L2/L3 receives indication from L1 whether ACK is received or DTX is detected after indication of Random Access Preamble transmission to L1. L2/3 indicates L1 to transmit first scheduled UL transmission (RRC Connection Request in case of initial access) if necessary or Random Access Preamble based on the indication from L1.

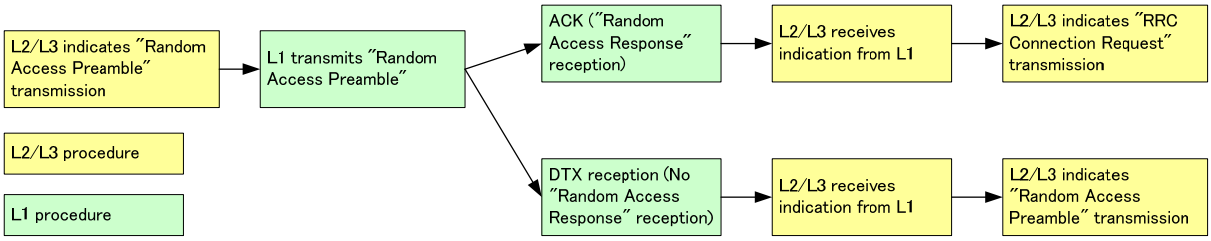

Figure 10.1.5.3-1: Interaction model between L1 and L2/3 for Random Access Procedure

10.1.6 Radio Link Failure

Two phases governs the behaviour associated to radio link failure as shown on Figure 10.1.6-1:

- First phase:
  - started upon radio problem detection;
  - leads to radio link failure detection;
  - no UE-based mobility;
  - based on timer or other (e.g. counting) criteria (T_1).
- Second Phase:
  - started upon radio link failure detection or handover failure;
  - leads to RRC_IDLE;
  - UE-based mobility;
  - Timer based (T_2).

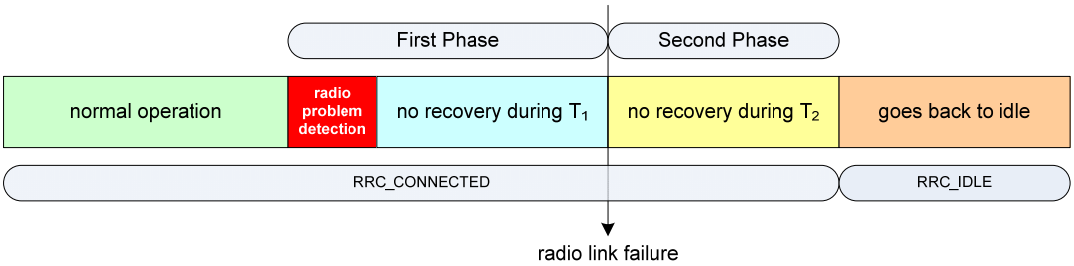

Figure 10.1.6-1: Radio Link Failure

Table 10.1.6-1 below describes how mobility is handled with respect to radio link failure:

Table 10.1.6-1: Mobility and Radio Link Failure

Cases	First Phase	Second Phase	T2 expired
UE returns to the same cell	Continue as if no radio problems occurred	Activity is resumed by means of explicit signalling between UE and eNB	Go via RRC_IDLE
UE selects a different cell from the same eNB	N/A	Activity is resumed by means of explicit signalling between UE and eNB	Go via RRC_IDLE
UE selects a cell of a prepared eNB (NOTE)	N/A	Activity is resumed by means of explicit signalling between UE and eNB	Go via RRC_IDLE
UE selects a cell of a different eNB that is not prepared (NOTE)	N/A	Go via RRC_IDLE	Go via RRC_IDLE
NOTE: a prepared eNB is an eNB which has admitted the UE during an earlier executed HO preparation phase.			

In the Second Phase, in order to resume activity and avoid going via RRC_IDLE when the UE returns to the same cell or when the UE selects a different cell from the same eNB, or when the UE selects a cell from a different eNB, the following procedure applies:

- The UE stays in RRC_CONNECTED;
- The UE accesses the cell through the random access procedure;
- The UE identifier used in the random access procedure for contention resolution (i.e. C-RNTI of the UE in the cell where the RLF occurred + physical layer identity of that cell + MAC based on the keys of that cell) is used by the selected eNB to authenticate the UE and check whether it has a context stored for that UE:
  - If the eNB finds a context that matches the identity of the UE, it indicates to the UE that its connection can be resumed;
  - If the context is not found, RRC connection is released and UE initiates procedure to establish new RRC connection. In this case UE is required to go via RRC_IDLE.

10.1.7 Radio Access Network Sharing

E-UTRAN shall support radio access network sharing based on support for multi-to-multi relationship between E-UTRAN nodes and EPC nodes (S1-flex).

If the E-UTRAN is shared by multiple operators, the system information broadcasted in each shared cell contains the PLMN-id of each operator (up to 6) and a single tracking area code (TAC) valid within all the PLMNs sharing the radio access network resources.

The UE shall be able to read up to 6 PLMN-ids, to select one of the PLMN-ids at initial attachment and to indicate this PLMN-id to the E-UTRAN in subsequent instances of the Random Access procedures (e.g. as defined in subclause 10.1.5). The E-UTRAN shall select an appropriate MME for the PLMN indicated by the UE. Once attached to an MME, the UE shall be able to indicate the allocated MME in subsequent instances of the Random Access procedures. The indication of the allocated MMEC is contained in the temporary UE identity.

Handling of area restrictions for UE in ECM-CONNECTED shall follow the principles specified in sub-clause 10.4.

10.1.8 Handling of Roaming and Area Restrictions for UEs in ECM-CONNECTED

Handling of roaming/area restrictions and handling of subscription specific preferences in ECM-CONNECTED is performed in the eNB based on information provided by the EPC over the S1 interface.

10.2 Inter RAT

Service-based redirection between GERAN / UTRAN and E-UTRAN is supported in both directions. This should not require inter-RAT reporting in RRC CONNECTION REQUEST.

10.2.1 Cell reselection

A UE in RRC_IDLE performs cell reselection. The principles of this procedure are as follows:

- The UE makes **measurements** of attributes of the serving and neighbour cells to enable the reselection process:
  - For a UE to search and measure neighbouring GERAN cells, the ARFCNs of the BCCH carriers need to be indicated in the serving cell system information (i.e., an NCL). The NCL does not contain BSICs or cell specific offsets and Qrxlevmin is given per frequency band.
  - For a UE to search and measure neighbouring UTRAN cells, the serving cell can indicate an NCL containing a list of carrier frequencies and scrambling codes.
  - Measurements may be omitted if the serving cell attribute fulfils particular search or measurement criteria.
- **Cell reselection** identifies the cell that the UE should camp on. It is based on cell reselection criteria which involves measurements of the serving and neighbour cells:
  - Inter-RAT reselection is based on absolute priorities where UE tries to camp on highest priority RAT available. Absolute priorities for inter-RAT reselection are provided only by the RPLMN and valid only within the RPLMN; priorities are given by the system information and valid for all UEs in a cell, specific priorities per UE can be signalled in the RRC Connection Release message. A validity time can be associated with UE specific priorities.
  - It should be possible to prevent the UE from reselecting to specific detected neighbouring cells;
  - The UE is allowed to "leave" the source E-UTRAN cell to read the target GERAN cell broadcast, in order to determine its "suitability", prior to completing the cell reselection;
  - Cell reselection can be speed dependent (speed detection based on UTRAN solution);

Cell access restrictions apply as for UTRAN, which consist of access class (AC) barring and cell reservation (e.g. for cells "reserved for operator use") applicable for mobiles in RRC_IDLE mode.

When performing cell reselection while the UE is camped on another RAT, the principles of this procedure are as follows:

- The UE measures attributes of the E-UTRA neighbouring cells:
  - Only the carrier frequencies need to be indicated to enable the UE to search and measure E-UTRA neighbouring cells;
- Cell reselection identifies the cell that the UE should camp on. It is based on cell reselection criteria which involves measurements of the serving and neighbour cells:
  - For E-UTRA neighbouring cells, there is no need to indicate cell-specific cell reselection parameters i.e. these parameters are common to all neighbouring cells on an E-UTRA frequency;
- Cell reselection parameters are applicable to all UEs in a cell, but it is possible to configure specific reselection parameters per UE group or per UE.
- It should be possible to prevent the UE from reselecting to specific detected neighbouring cells.

10.2.2 Handover

Inter RAT HO is designed so that changes to GERAN and UTRAN are minimised. This can be done by following the principles specified for GERAN to/from UTRAN intersystem HO. In particular the following principles are applied to E-UTRAN Inter RAT HO design:

1. Inter RAT HO is network controlled through source access system. The source access system decides about starting the preparation and provides the necessary information to the target system in the format required by the target system. That is, the source system adapts to the target system. The actual handover execution is decided in the source system.
2. Inter RAT HO is backwards handover, i.e. radio resources are prepared in the target 3GPP access system before the UE is commanded by the source 3GPP access system to change to the target 3GPP access system.
3. To enable backwards handover, and while RAN level interfaces are not available, a control interface exists in CN level. In Inter RAT HO involving E-UTRAN access, this interface is between 2G/3G SGSN and corresponding MME/Serving Gateway.
4. The target access system will be responsible for giving exact guidance for the UE on how to make the radio access there (this includes radio resource configuration, target cell system information etc.). This information is given during the handover preparation and should be transported completely transparently through the source access system to the UE.
5. Mechanisms for avoiding or mitigating the loss of user data (i.e. forwarding) can be used until the 3GPP Anchor determines that it can send DL U-plane data directly to the target system.
6. The handover procedure should not require any UE to CN signalling in order for data to start to flow in the target system. This requires that the security context, UE capability context and QoS context is transferred (or translated) within the network between source and target system.
7. Similar handover procedure should apply for handovers of both real time and non-real time services.
8. Similar handover procedure should apply for both Inter RAT Handover and intra-LTE Handover with EPC node change.
9. Network controlled mobility is supported even if no prior UE measurements have been performed on the target cell and/or frequency i.e. “blind HO” is supported.

10.2.2a Inter-RAT cell change order to GERAN with NACC

For interworking towards GERAN, inter-RAT cell change order with NACC is supported even if no prior UE measurements have been performed on the system i.e. “blind NACC” is supported.

10.2.2b Inter-RAT handovers from E-UTRAN

10.2.2b.1 Data forwarding

10.2.2b.1.1 For RLC-AM bearers

Upon handover, the eNB may forward all downlink PDCP SDUs that have not been acknowledged by the UE, or all downlink PDCP SDUs that have not been transmitted to the UE, to the target node. In addition, the eNB may forward fresh data arriving over S1 to the target node.

NOTE: Any assigned PDCP SNs are not forwarded because of PDCP reset.

NOTE: Target node does not have to wait for the completion of forwarding from the eNB before it begins transmitting packets to the UE.

The eNB discards any remaining downlink RLC PDUs.

Upon handover, all successfully received PDCP SDUs are delivered to the upper layers in the UE.

NOTE: eNB does not need to abort ongoing RLC transmissions with the UE as it starts data forwarding to the target node.

Upon handover, the eNB may forward uplink PDCP SDUs successfully received to the Serving Gateway and shall discard any remaining uplink RLC PDUs.

Correspondingly, the eNB does not forward the downlink and uplink RLC context.

For the uplink, the UE transmits over the target RAT from the first PDCP SDU for which transmission has not been attempted in the source cell.

In-sequence delivery of upper layer PDUs during handover is not guaranteed.

10.2.2b.1.2 For RLC-UM bearers

Upon handover, the eNB does not forward to the target node downlink PDCP SDUs for which transmission had been completed in the source cell. PDCP SDUs that have not been transmitted may be forwarded. In addition, the eNB may forward fresh data arriving over S1 to the target node. The eNB discards any remaining downlink RLC PDUs.

Upon handover, all successfully received PDCP SDUs are delivered to the upper layers in the UE.

Upon handover, the eNB may forward all uplink PDCP SDUs successfully received to the Serving Gateway and discards any remaining uplink RLC PDUs.

For the uplink, the UE transmits over the target RAT from the first PDCP SDU for which transmission has not been attempted in the source cell.

Correspondingly, the eNB does not forward the downlink and uplink RLC context.

10.2.3 Measurements

10.2.3.1 Inter-RAT handovers from E-UTRAN

Measurements to be performed by a UE for inter-RAT mobility can be controlled by E-UTRAN, using broadcast or dedicated control. In RRC_CONNECTED state, a UE shall follow the measurement parameters specified by RRC directed from the E-UTRAN (e.g. as in UTRAN MEASUREMENT_CONTROL).

UE performs inter-RAT neighbour cell measurements during DL/UL idle periods that are provided by the network through suitable DRX/DTX period or packet scheduling if necessary.

10.2.3.2 Inter-RAT handovers to E-UTRAN

From UTRAN, UE performs E-UTRAN measurements by using idle periods created by compressed mode (CELL_DCH) or DRX (other states except CELL_FACH).

From GERAN, E-UTRAN measurements are performed in the same way as WCDMA measurements for handover to UTRAN: E-UTRAN measurements are performed in GSM idle frames in a time multiplexed manner. However, it should be discussed with GERAN how to ensure that inter-RAT measurements do not take too much measurement time, while the requested 3GPP inter-RAT measurements can be performed well enough.

Design constraints of 3GPP inter-RAT measurements should be considered when L1 details of E-UTRAN concept are defined.

10.2.3.3 Inter-RAT cell reselection from E-UTRAN

In RRC_IDLE state, a UE shall follow the measurement parameters specified by the E-UTRAN broadcast (as in UTRAN SIB). The use of dedicated measurement control is possible through the provision of UE specific priorities (see sub-clause 10.2.4).

10.2.3.4 Limiting measurement load at UE

Introduction of E-UTRA implies co-existence of various UE capabilities. Each UE may support different combinations of RATs, e.g., E-UTRA, UTRA, GSM, and non-3GPP RATs, and different combinations of frequency bands, e.g., 800 MHz, 1.7 GHz, 2 GHZ, etc. Despite such heterogeneous environment, the measurement load at UE should be minimised. To limit the measurement load and the associated control load:

- E-UTRAN can configure the RATs to be measured by UE;
- The number of measurement criteria (event and periodic reporting criteria) should be limited (as in TS 25.133 subclause 8.3.2 [7]);

- E-UTRAN should be aware of the UE capabilities for efficient measurement control, to prevent unnecessary waking up of the measurement entity;
- Blind HO (i.e., HO without measurement reports from UE) is possible.

10.2.4 Network Aspects

Inter-frequency/inter-RAT UE based mobility relies on a "priority based scheme", where the network configures a list of RATs/frequencies to be taken as basis for UE's inter-frequency/inter-RAT cell reselection decisions in priority order. E-UTRAN cells can enable inter-frequency/inter-RAT cell reselection by broadcasting a common priority valid for all UEs in a given cell in addition to other inter-frequency/inter-RAT information.

NOTE: The same principles apply in UTRAN.

These common priorities can be overwritten by E-UTRAN through dedicated signalling to individual UEs at RRC_CONNECTED to RRC_IDLE transition.

NOTE: In order to have consistent inter-RAT operation, the same principles apply to inter-RAT reselection to E-UTRAN. For UTRAN this includes also the transitions within RRC_CONNECTED state from CELL_DCH to CELL_PCH and URA_PCH.

Setting dedicated priorities by E-UTRAN can be based on subscription related information provided by the MME.

NOTE: The same principle have been taken as a working assumption in UTRAN (awaiting for SA2 decision on feasibility of providing subscription related information by the CN).

10.3 Mobility between E-UTRAN and Non-3GPP radio technologies

10.3.1 UE Capability Configuration

A UE shall be able to communicate with the E-UTRAN about its radio access capability, such as the system (including the release and frequency band) it supports and it's receive and transmit capabilities (single/dual radio, dual receiver). UE shall transfer its capability about other radio technologies over E-UTRAN using the same procedure used to carry its E-UTRAN radio capability.

Since the 1xRTT CSfallback procedures are triggered by the UE, or the 1xRTT network, there is no need for the eNB to know the UE 1xRTT CSfallback capability.

10.3.2 Mobility between E-UTRAN and cdma2000 network

This section describes the E-UTRAN mechanisms to support idle and active mode mobility between E-UTRAN and cdma2000 HRPD or 1xRTT. The overall system is described in [17].

10.3.2.1 Tunnelling of cdma2000 Messages over E-UTRAN between UE and cdma2000 Access Nodes

In order to efficiently support handover procedures when on E-UTRAN with a cdma2000 target system, cdma2000 messages are sent transparently to the target system over the E-UTRAN, with the eNB and MME acting as relay points.

To support the MME in its selection of the correct target system node to which it should route an Uplink tunnelled message and to provide the target system with information that is needed to resolve technology-specific measurement information (RouteUpdate and pilot strength measurements) that are delivered to the cdma2000 system each eNB cell is associated with a cdma2000 HRPD SectorID and/or with a cdma2000 1xRTT SectorID (generically referred to as cdma2000 reference cellid). This cdma2000 reference cellid is provided by the eNB to the MME using the cdma2000 message transfer capability over S1-AP and forwarded to the target system via the S101 interface and corresponding interface to the cdma2000 1xRTT system.

Tunnelling is achieved over the E-UTRAN radio interface by encapsulating tunnelled cdma2000 messages in the UL Information Transfer (for pre-registration signalling) or UL Handover Preparation transfer (for handover signalling) and DL Information Transfer RRC messages (e.g., similar to UMTS Uplink/Downlink Direct Transfer). The reason for

using different UL transfer messages is so that the UL Handover Preparation transfer messages can use a higher priority signalling radio bearer. For the UL/DL Information Transfer messages a specific IE in these RRC messages is used to identify the type of information contained in the message (e.g., NAS, TunneledMsg). Additionally if the message is carrying a tunnelled message, an additional IE is included to carry cdma2000 specific RRC Tunnelling Procedure Information (e.g. RAT type).

AS level security will be applied for these UL Information Transfer / UL Handover Preparation Transfer and DL Information Transfer RRC messages as normal but there is no NAS level security for these tunnelled cdma2000 messages.

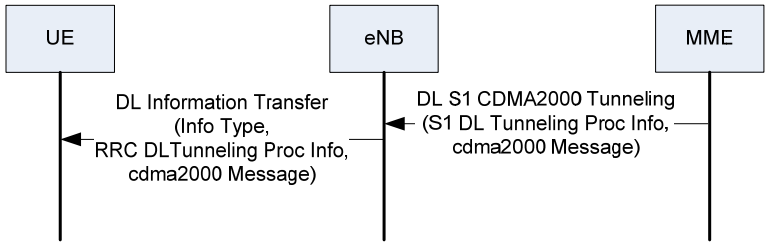

Figure 10.3.2.1-1: Downlink Direct Transfer

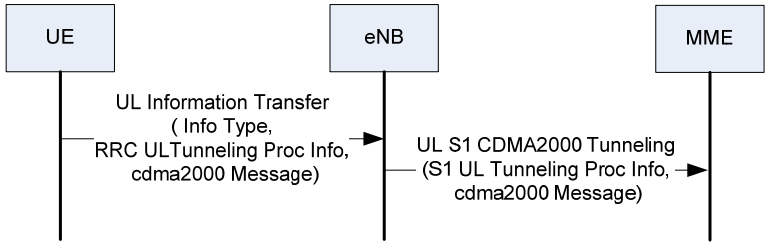

Figure 10.3.2.1-2: Uplink Direct Transfer

Tunnelling to the MME is achieved over the S1-MME interface by encapsulating the tunnelled cdma2000 message in a new S1 CDMA tunneling messages. These S1 messages carry in addition to the tunneled message some additional cdma2000 specific IEs (e.g. cdma2000 Reference Cell Id, RAT type, cdma2000 message type).

10.3.2.2 Mobility between E-UTRAN and HRPD

10.3.2.2.1 Mobility from E-UTRAN to HRPD

10.3.2.2.1.1 HRPD System Information Transmission in E-UTRAN

The HRPD system information block (SIB) shall be sent on the E-UTRAN BCCH. The UE shall monitor the E-UTRAN BCCH during the RRC_IDLE and RRC_CONNECTED modes to retrieve the HRPD system information for the preparation of cell reselection or handover from the E-UTRAN to HRPD system. HRPD system information may also be provided to the UE by means of dedicated signalling. The HRPD system information contains HRPD neighbouring cell information, cdma timing information, as well as information controlling the HRPD pre-registration.

10.3.2.2.1.2 Measuring HRPD from E-UTRAN

Measurement events and parameters for HRPD measurements are to be aligned with those defined in section 10.2.3.

10.3.2.2.1.2.1 Idle Mode Measurement Control

UE shall be able to make measurements on the HRPD cells in RRC_IDLE mode to perform cell re-selection.

The intra-3GPP inter-RAT idle mode measurement control is re-used to control the idle mode measurements on HRPD. The UE performs measurement on HRPD when the signal quality from E-UTRAN serving cell falls below a given threshold.

10.3.2.2.1.2.2 Active Mode Measurement Control

In RRC_CONNECTED mode, the UE shall perform radio measurements on the HRPD network when directed by the E-UTRAN network. The network provides the required HRPD neighbour cell list information and measurement controls to the UE through dedicated RRC signalling. When needed the eNB is responsible for configuring and activating the HRPD measurements on the UE via the dedicated RRC signalling message. Periodic and event-triggered measurements are supported.

For single-radio terminals, measurement gaps are needed to allow the UE to switch into the HRPD network and do radio measurements. These measurement gaps are network-controlled. The eNB is responsible for configuring the gap pattern and providing it to the UE through RRC dedicated signalling. Terminals with a dual receiver perform measurements on HRPD neighbour cells without tuning away from the E-UTRAN network. No DL gap patterns will be required for UEs which are capable of simultaneous reception on the involved frequency bands. No UL gap patterns will be required for UEs which are capable simultaneous transmission in one access and measuring on another access.

10.3.2.2.1.2.3 Active Mode Measurement

In RRC_CONNECTED mode, the UE measures the strengths of each of the HRPD neighbour cells and reports them in an RRC message.

10.3.2.2.1.3 Pre-registration to HRPD Procedure

Pre-registration allows a UE to establish a presence with an HRPD system in advance of a cell re-selection or handover. E-UTRAN network instructs the UE whether the pre-registration is needed over broadcast channel and in a dedicated RRC message.

The signalling procedure is transparent to E-UTRAN network. In the pre-registration to HRPD, messages shall be tunnelled inside RRC and S1-AP messages between the UE and MME and in a generic "transfer" message between source MME and target accesss network.

The UE is responsible for maintaining the HRPD context e.g. by performing periodic re-registrations if needed. The UE will use pre-registration zone information (including the current HRPD Pre-registration Zone and a list of HRPD Secondary Pre-registration Zone ID) to decide whether a re-registration shall be performed. A dual-receiver UE can ignore the parameter. E-UTRAN will provide the pre-registration zone information on the E-UTRAN system information broadcast channel or dedicated RRC signalling (unless it is determined that the UE will read the E-UTRAN system information broadcast channel in RRC_CONNECTED). Re-registrations are only allowed in areas where pre-registration is requested.

The managing of pre-registration and re-registration is handled by HRPD upper layer. The UE should indicate if it is pre-registered when sending measurement reports on cdma2000 cells.

10.3.2.2.1.4 E-UTRAN to HRPD Cell Re-selection

The pre-condition for cell re-selection from E-UTRAN to HRPD is that the UE has previously established a presence in the target HRPD network, either through the pre-registration procedure or previous HRPD attachment. The UE performs Cell re-selection to HRPD while in RRC_IDLE.

Cell reselection from E-UTRAN to HRPD should be aligned with 3GPP inter RAT cell reselection mechanism. . .

10.3.2.2.1.5 E-UTRAN to HRPD Handover

The pre-condition for the E-UTRAN to HRPD Handover procedure is that the UE is attached in the E-UTRAN network in E-UTRAN_ACTIVE state and has pre-registered with the HRPD network. Based on measurement reports received from the UE the eNB initiates a handover by sending an RRC HANDOVER FROM E-UTRA PREPARATION REQUEST message to the UE to indicate to the UE that it should begin the handover procedure. This message shall include the specified target RAT type and any cdma2000 specific HRPD parameters needed by the UE to create the appropriate HRPD messages needed to request a connection. Upon reception of this message the UE should begin handover signalling towards the HRPD access. The HRPD handover signalling is tunnelled through E-UTRAN between

the UE and HRPD network. These HRPD parameters and HRPD messages are transparent to E-UTRAN. The set of the required HRPD parameters are out of scope of this specification.

The messages are transferred inside RRC transfer messages and S1 CDMA2000 tunneling messages. The MME will, based on indication provided by the HRPD network, get information about if the handover succeeded or failed making it possible for the MME set the handover status in the S1 CDMA2000 tunneling messages (e.g. handover success, handover failure). In case the handover succeeded E-UTRAN will include the tunnelled "CDMA2000 handover command", which will be sent to the UE, inside the RRC MOBILITY FROM E-UTRA message.

The UE can continue to send and receive data on the E-UTRAN radio until it receives the RRC MOBILITY FROM E-UTRA message including a tunnelled "CDMA2000 handover command". After this message is received by the UE, the UE shall leave the E-UTRAN radio and start acquiring the HRPD traffic channel. The HRPD handover signalling is tunnelled between the UE and HRPD network.

10.3.2.2.2 Mobility from HRPD to E-UTRAN

Mobility from HRPD to E-UTRAN has no impact on the E-UTRAN.

10.3.2.3 Mobility between E-UTRAN and cdma2000 1xRTT

10.3.2.3.1 Mobility from E-UTRAN to cdma2000 1xRTT

10.3.2.3.1.1 cdma2000 1xRTT System Information Transmission in E-UTRAN

The cdma2000 1xRTT system information block (SIB) shall be sent on E-UTRAN BCCH. The UE shall monitor the E-UTRAN BCCH during the LTE_IDLE and RRC_CONNECTED modes to retrieve the 1xRTT system information for the preparation of handover from the E-UTRAN to cdma 2000 1xRTT system. 1xRTT system information may also be provided to the UE by means of dedicated signalling. The 1xRTT system information contains 1xRTT neighbouring cell information and cdma timing information, as well as information controlling the 1xRTT pre-registration for 1xCS Fallback.

10.3.2.3.1.2 Measuring cdma2000 1xRTT from E-UTRAN

Measurement events and parameters for 1xRTT measurements are to be aligned with those defined in section 10.2.3.

10.3.2.3.1.2.1 Idle Mode Measurement Control

UE shall be able to make measurements on the 1xRTT system cells in LTE_IDLE mode to perform cell re-selection. UE shall perform cdma2000 1xRTT neighbour cell measurements during DRX periods, between paging occasions.

The intra-3GPP inter-RAT idle mode measurement control is re-used to control the idle mode measurements on cdma2000 1xRTT. The UE performs measurement on cdma2000 1xRTT when the signal quality from E-UTRAN serving cell falls below a given threshold.

10.3.2.3.1.2.2 Active Mode Measurement Control

In the E-UTRAN network, in RRC_CONNECTED mode, the UE shall perform radio measurements on the cdma2000 1xRTT network when directed by the E-UTRAN network. The network provides the required cdma2000 1xRTT neighbour cell list information and measurement controls to the UE through dedicated RRC signalling. When needed the eNB is responsible for configuring and activating the cdma2000 1xRTT measurements on the UE via the dedicated RRC signalling message. As for intra-3GPP inter-RAT measurement reporting, periodic and event-triggered measurements are supported.

For single-radio terminals, measurement gaps are needed to allow the UE to switch into the cdma2000 1xRTT network and do radio measurements. These Measurement gaps are network-controlled. The eNB is responsible for configuring the gap pattern and providing it to the UE through RRC dedicated signalling. Terminals with a dual receiver perform measurements on cdma2000 1xRTT neighbour cells without tuning away from the E-UTRAN network. No DL gap patterns will be required for UEs which are capable of simultaneous reception on the involved frequency bands. No UL gap patterns will be required for UEs which are capable simultaneous transmission in one access and measuring on another access.

10.3.2.3.1.2.3 Active Mode Measurement

In RRC_CONNECTED mode, the UE measures the strengths of each of the cdma2000 1xRTT neighbour cells and reports them in an RRC Message.

10.3.2.3.1.3 E-UTRAN to cdma2000 1xRTT Cell Re-selection

UE performs Cell re-selection to cdma2000 1xRTT while in RRC_IDLE.

Cell reselection from E-UTRAN to 1xRTT should be aligned with 3GPP inter RAT cell reselection mechanism.

10.3.2.3.1.4 E-UTRAN to cdma2000 1xRTT Handover

In the high level procedure for handover from E-UTRAN to cdma2000 1xRTT except 1xRTT CS Fallback, registration and handover is performed directly after the handover decision has been made. Based on measurement reports received from the UE the eNB initiates a handover by sending a RRC HANDOVER FROM E-UTRA PREPARATION REQUEST message to the UE to indicate to the UE that it should begin the handover procedure. This message shall include the specified target RAT type and any cdma2000 specific 1xRTT access parameters needed by the UE to create the appropriate 1xRTT Origination Request message. The 1xRTT handover signalling is tunnelled between the UE and 1xRTT network. The 1xRTT access parameters and 1xRTT messages are transparent to E-UTRAN. The set of the required 1xRTT access parameters are out of scope of this specification.

The messages are transferred inside RRC transfer messages and S1 CDMA2000 tunneling messages. The MME will, based on indication provided by the 1xRTT network, get information about if the handover succeeded or failed making it possible for the MME set the handover status in the S1 CDMA2000 tunneling messages (e.g. handover success, handover failure). In case the handover succeeded E-UTRAN will include the tunnelled “CDMA2000 handover command”, which will be sent to the UE, inside the RRC MOBILITY FROM E-UTRA message.

The UE can continue to send and receive data on the E-UTRAN radio until it receives the RRC MOBILITY FROM E-UTRA message including a tunnelled “CDMA2000 handover command”. After this message is received by the UE, the UE shall leave the E-UTRAN radio and start acquiring the 1xRTT traffic channel.

10.3.2.3.2 Mobility from cdma2000 1xRTT to E-UTRAN

Mobility from cdma2000 1xRTT has no impact on E-UTRAN.

10.3.2.3.3 1xRTT CS Fallback

CS fallback for 1xRTT enables the delivery of CS-domain services when a UE is being served by the E-UTRAN [23]. A CS fallback enabled terminal, while connected to the E-UTRAN may pre-register in the 1xRTT CS domain in order to use the 1xRTT access network to establish both terminating and originating 1xRTT calls in the CS domain. The 1xRTT signalling (pre-registration and Paging) between UE and CDMA network is transparent to E-UTRAN. The 1xRTT messages shall be tunnelled inside RRC and S1-AP messages between the UE and MME and in a generic "transfer" message between source MME and target 1xRTT access network.

10.3.2.3.3.1 Pre-registration Procedure for 1xRTT CSFB

Pre-registration allows a UE to establish a presence with the 1xRTT network in advance of a 1xCSfallback. E-UTRAN network instructs the UE whether the 1xRTT pre-registration is needed over broadcast channel. Before performing a 1xRTT pre-registration, the UE requests from the eNB the necessary information to perform the 1xRTT pre-registration using *CDMA2000-CSFBParametersRequest* message. The eNB provides the necessary parameters in the response *CDMA2000-CSFBParametersResponse.* These necessary parameters are pre-configured in the eNB and are transparent to E-UTRAN.

The UE is responsible for maintaining the 1xRTT context e.g. by performing periodic re-registrations if needed. The UE will use the 1xRTT pre-registration information to decide whether a re-registration shall be performed. A dual-receiver UE can ignore these parameters. Re-registrations are only allowed in areas where pre-registration is requested.

The management of the pre-registration and re-registration is handled by the 1xRTT upper layer in the UE.

10.4 Area Restrictions

Information on which area restrictions to be applied during ECM-CONNECTED state is provided by the MME at context setup over the S1 interface.

The eNB shall store the UE restriction information and use it to determine whether the UE has access to radio resources in the E-UTRAN. The source eNB should apply restriction handling when selecting a target eNB.

The available UE restriction information shall be propagated by the source eNB over X2 at intra E-UTRAN handover.

10.5 Mobility to and from CSG cells

10.5.0 Principles for idle-mode mobility with CSG cells

10.5.0.1 Intra-frequency mobility

Intra-frequency mobility in idle mode in the presence of "allowed" CSG cells (*i.e.*, CSG cells that the UE is allowed to camp on) is based on cell ranking and reselection using the "best cell principle": For cell ranking and reselection, the UE may ignore all CSG cells that are known by the UE to be not allowed.

10.5.0.2 Inter-frequency mobility

For cell ranking and reselection, the UE should prioritize CSG cells with CSG ID present in the UE's allowed CSG list, irrespective of normal network configured frequency priorities.

10.5.0.3 Inter-RAT Mobility

Inter-RAT inbound mobility to E-UTRAN CSG cells is also supported by a UE autonomous search when the UE is camped on a RAT other than E-UTRAN. The UE requirements are defined in the specifications of the concerned RAT.

10.5.1 Inbound mobility to CSG cells

10.5.1.1 RRC_IDLE

Cell selection/reselection to CSG cells is based on a UE autonomous search function. The search function determines itself when/where to search, and need not be assisted by the network with information about frequencies which are dedicated to CSG cells.

To assist the search function on mixed carriers, all CSG cells on mixed carriers broadcast in system information a range of PCI values reserved by the network for use by CSG cells. Optionally also non-CSG cells on the mixed carrier can send this information in system information. The reserved PCI range is only applicable to the frequency of the PLMN where the UE received this information. The UE considers the last received reserved range of PCI values for CSG cells to be valid for a maximum of 24 hours within the entire PLMN. UE's use of the received PCI split information is UE implementation dependent.

UE checks the suitability of CSG cells (identified by the 1 bit indicator) based on the allowed CSG list in the UE (provided by upper layers). A CSG cell is only suitable for a UE if it belongs to its allowed CSG list.

The automated searching for the CSG cells by the UE shall be disabled by the search function, if the allowed CSG list configured in the UE is empty.

In addition, manual selection of CSG cells is supported.

Cell selection/reselection to CSG cells does not require the network to provide neighbour cell information to the UE. The neighbour cell information can be provided to help the UE in specific cases, e.g. where the network wishes to trigger the UE to search for CSG cells.

Cell Reselection between allowed CSG cells is based on normal cell reselection procedure.

10.5.1.2 RRC_CONNECTED

While the UE is in RRC_CONNECTED state, the UE performs normal measurement and mobility procedures based on configuration provided by the network.

The UE is not required to support manual selection of CSG IDs while in RRC_CONNECTED state.

10.5.2 Outbound mobility from CSG cells

10.5.2.1 RRC_IDLE

For a UE leaving a CSG cell in idle mode normal cell reselection based on configuration from the BCCH of the CSG cell applies.

10.5.2.2 RRC_CONNECTED

For a UE leaving a CSG cell in active mode normal network controlled mobility applies.

10.6 Measurement Model

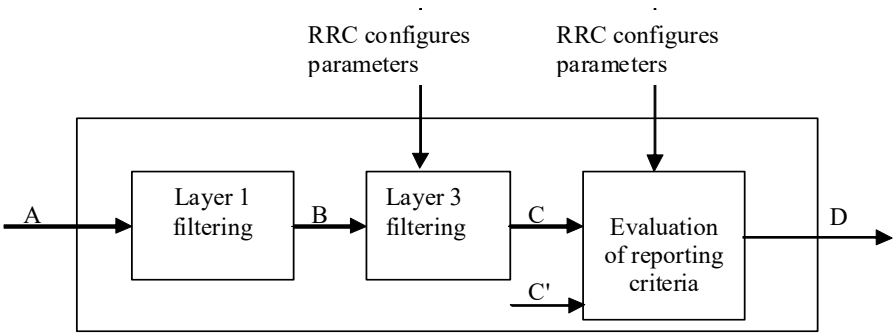

Figure 10.6-1: Measurement model

- **A:** measurements (samples) internal to the physical layer.
- **Layer 1 filtering:** internal layer 1 filtering of the inputs measured at point A. Exact filtering is implementation dependant. How the measurements are actually executed in the physical layer by an implementation (inputs A and Layer 1 filtering) in not constrained by the standard.
- **B:** A measurement reported by layer 1 to layer 3 after layer 1 filtering.
- **Layer 3 filtering:** Filtering performed on the measurements provided at point B. The behaviour of the Layer 3 filters are standardised and the configuration of the layer 3 filters is provided by RRC signalling. Filtering reporting period at C equals one measurement period at B.
- **C:** A measurement after processing in the layer 3 filter. The reporting rate is identical to the reporting rate at point B. This measurement is used as input for one or more evaluation of reporting criteria.
- **Evaluation of reporting criteria:** This checks whether actual measurement reporting is necessary at point D. The evaluation can be based on more than one flow of measurements at reference point C e.g. to compare between different measurements. This is illustrated by input C and C'. The UE shall evaluate the reporting criteria at least every time a new measurement result is reported at point C, C'. The reporting criteria are standardised and the configuration is provided by RRC signalling (UE measurements).
- **D:** Measurement report information (message) sent on the radio interface.

Layer 1 filtering will introduce a certain level of measurement averaging. How and when the UE exactly performs the required measurements will be implementation specific to the point that the output at B fulfils the performance requirements set in [21]. Layer 3 filtering and parameters used is specified in [16] and does not introduce any delay in the sample availability between B and C. Measurement at point C, C' is the input used in the event evaluation.

11 Scheduling and Rate Control

In order to utilise the SCH resources efficiently, a scheduling function is used in MAC. In this subclause, an overview of the scheduler is given in terms of scheduler operation, signalling of scheduler decisions, and measurements to support scheduler operation.

11.1 Basic Scheduler Operation

MAC in eNB includes dynamic resource schedulers that allocate physical layer resources for the DL-SCH and UL-SCH transport channels. Different schedulers operate for the DL-SCH and UL-SCH.

The scheduler should take account of the traffic volume and the QoS requirements of each UE and associated radio bearers, when sharing resources between UEs. Only "per UE" grants are used to grant the right to transmit on the UL-SCH (i.e. there are no "per UE per RB" grants).

Schedulers may assign resources taking account the radio conditions at the UE identified through measurements made at the eNB and/or reported by the UE.

Radio resource allocations can be valid for one or multiple TTIs.

Resource assignment consists of physical resource blocks (PRB) and MCS. Allocations for time periods longer than one TTI might also require additional information (allocation time, allocation repetition factor…).

11.1.1 Downlink Scheduling

In the downlink, E-UTRAN can dynamically allocate resources (PRBs and MCS) to UEs at each TTI via the C-RNTI on PDCCH(s). A UE always monitors the PDCCH(s) in order to find possible allocation when its downlink reception is enabled (activity governed by DRX when configured).

In addition, E-UTRAN can allocate semi-persistent downlink resources for the first HARQ transmissions to UEs:

- RRC defines the periodicity of the semi-persistent downlink grant;
- PDCCH indicates whether the downlink grant is a semi-persistent one i.e. whether it can be implicitly reused in the following TTIs according to the periodicity defined by RRC.

When required, retransmissions are explicitly signalled via the PDCCH(s). In the sub-frames where the UE has semi-persistent downlink resource, if the UE cannot find its C-RNTI on the PDCCH(s), a downlink transmission according to the semi-persistent allocation that the UE has been assigned in the TTI is assumed. Otherwise, in the sub-frames where the UE has semi-persistent downlink resource, if the UE finds its C-RNTI on the PDCCH(s), the PDCCH allocation overrides the semi-persistent allocation for that TTI and the UE does not decode the semi-persistent resources.

11.1.2 Uplink Scheduling

In the uplink, E-UTRAN can dynamically allocate resources (PRBs and MCS) to UEs at each TTI via the C-RNTI on PDCCH(s). A UE always monitors the PDCCH(s) in order to find possible allocation for uplink transmission when its downlink reception is enabled (activity governed by DRX when configured).

In addition, E-UTRAN can allocate a semi-persistent uplink resource for the first HARQ transmissions and potentially retransmissions to UEs:

- RRC defines the periodicity of the semi-persistent uplink grant;
- PDCCH indicates whether the uplink grant is a semi-persistent one i.e. whether it can be implicitly reused in the following TTIs according to the periodicity defined by RRC.

In the sub-frames where the UE has semi-persistent uplink resource, if the UE cannot find its C-RNTI on the PDCCH(s), an uplink transmission according to the semi-persistent allocation that the UE has been assigned in the TTI can be made. The network performs decoding of the pre-defined PRBs according to the pre-defined MCS. Otherwise, in the sub-frames where the UE has semi-persistent uplink resource, if the UE finds its C-RNTI on the PDCCH(s), the PDCCH allocation overrides the persistent allocation for that TTI and the UE's transmission follows the PDCCH

allocation, not the semi-persistent allocation. Retransmissions are either implicitly allocated in which case the UE uses the semi-persistent uplink allocation, or explicitly allocated via PDCCH(s) in which case the UE does not follow the semi-persistent allocation.

NOTE: there is no blind decoding in uplink and when the UE does not have enough data to fill the allocated resource, padding is used.

11.2 Void

11.3 Measurements to Support Scheduler Operation

Measurement reports are required to enable the scheduler to operate in both uplink and downlink. These include transport volume and measurements of a UEs radio environment.

Uplink buffer status reports (BSR) are needed to provide support for QoS-aware packet scheduling. In E-UTRAN uplink buffer status reports refer to the data that is buffered in for a group of radio bearer (RBG) in the UE. Four RBGs and two formats are used for reporting in uplink:

- A short format for which only one BSR (of one RBG) is reported;
- A long format for which all four BSRs (of all four RBGs) are reported.

Uplink buffer status reports are transmitted using MAC signalling.

11.4 Rate Control of GBR and UE-AMBR

11.4.1 Downlink

The eNB guarantees the downlink GBR associated with a GBR bearer and enforces the downlink AMBR associated with a group of Non-GBR bearers.

11.4.2 Uplink

The UE has an uplink rate control function which manages the sharing of uplink resources between radio bearers. RRC controls the uplink rate control function by giving each bearer a priority and a prioritised bit rate (PBR). The values signalled may not be related to the ones signalled via S1 to the eNB.

The uplink rate control function ensures that the UE serves its radio bearer(s) in the following sequence:

1. All the radio bearer(s) in decreasing priority order up to their PBR;
2. All the radio bearer(s) in decreasing priority order for the remaining resources assigned by the grant.

NOTE1: In case the PBRs are all set to zero, the first step is skipped and the radio bearer(s) are served in strict priority order: the UE maximises the transmission of higher priority data.

NOTE2: By limiting the total grant to the UE, the eNB can ensure that the UE-AMBR is not exceeded.

If more than one radio bearer has the same priority, the UE shall serve these radio bearers equally.

11.5 CQI reporting for Scheduling

The time and frequency resources used by the UE to report CQI are under the control of the eNB. CQI reporting can be either periodic or aperiodic. A UE can be configured to have both periodic and aperiodic reporting at the same time. In case both periodic and aperiodic reporting occurs in the same subframe, only the aperiodic report is transmitted in that subframe.

For efficient support of localized, distributed and MIMO transmissions, E-UTRA supports three types of CQI reporting:

- Wideband type: providing channel quality information of entire system bandwidth of the cell;
- Multi-band type: providing channel quality information of some subset(s) of system bandwidth of the cell;
- MIMO type: open loop or closed loop operation (with or without PMI feedback).

Periodic CQI reporting is defined by the following characteristics:

- When the UE is allocated PUSCH resources in a subframe where a periodic CQI report is configured to be sent, the periodic CQI report is transmitted together with uplink data on the PUSCH. Otherwise, the periodic CQI reports are sent on the PUCCH.

Aperiodic CQI reporting is defined by the following characteristics:

- The report is scheduled by the eNB via the PDCCH;
- Transmitted together with uplink data on PUSCH.

When a CQI report is transmitted together with uplink data on PUSCH, it is multiplexed with the transport block by L1 (i.e. the CQI report is not part of the uplink the transport block).

The eNB configures a set of sizes and formats of the reports. Size and format of the report depends on whether it is transmitted over PUCCH or PUSCH and whether it is a periodic or aperiodic CQI report.

12 DRX in RRC_CONNECTED

In order to enable reasonable UE battery consumption, DRX in E-UTRAN is characterised by the following:

- Per UE mechanism (as opposed to per radio bearer);
- No RRC or MAC substate to distinguish between different levels of DRX;
- Available DRX values are controlled by the network and start from non-DRX up to *x* seconds. Value *x* may be as long as the paging DRX used in ECM-IDLE;
- Measurement requirement and reporting criteria can differ according to the length of the DRX interval i.e. long DRX intervals may experience more relaxed requirements;
- Irrespective of DRX, UE may use first available RACH opportunity to send an UL measurement report;
- Immediately after sending a measurement report, the UE may change its DRX. This mechanism would be pre-configured by the eNB;
- HARQ operation related to data transmission is independent of DRX operation and the UE wakes up to read the PDCCH for possible retransmissions and/or ACK/NAK signalling regardless of DRX In the downlink, a timer is used to limit the time the UE stays awake awaiting for a retransmission;
- When DRX is configured, the UE may be further configured with an "on-duration" timer during which time the UE monitors the PDCCHs for possible allocations;
- When DRX is configured, periodic CQI reports can only be sent by the UE during the “active-time”. RRC can further restrict periodic CQI reports so that they are only sent during the on-duration;
- A timer in the UE is used to detect need for obtaining timing advance.

The following definitions apply to DRX in E-UTRAN:

- **on-duration**: duration in downlink subframes that the UE waits for, after waking up from DRX, to receive PDCCHs. If the UE successfully decodes a PDCCH, the UE stays awake and starts the inactivity timer;
- **inactivity-timer**: duration in downlink subframes that the UE waits to successfully decode a PDCCH, from the last successful decoding of a PDCCH, failing which it re-enters DRX. The UE shall restart the inactivity timer following a single successful decoding of a PDCCH for a first transmission only (i.e. not for retransmissions).

- **active-time**: total duration that the UE is awake. This includes the "on-duration" of the DRX cycle, the time UE is performing continuous reception while the inactivity timer has not expired and the time UE is performing continuous reception while waiting for a DL retransmission after one HARQ RTT. Based on the above the minimum active time is of length equal to on-duration, and the maximum is undefined (infinite);

Of the above parameters the on-duration and inactivity-timer are of fixed lengths, while the active-time is of varying lengths based on scheduling decision and UE decoding success. Only on-duration and inactivity-timer duration are signalled to the UE by the eNB:

- There is only one DRX configuration applied in the UE at any time;
- UE shall apply an on-duration on wake-up from DRX sleep;

NOTE: this is also applicable for the case where the UE has only one service (e.g. Real Time) that is being handled through the allocation of predefined resources; this allows for other signalling such as RRC to be sent during the remaining portion of the active time.

- New transmissions can only take place during the active-time (so that when the UE is waiting for one retransmission only, it does not have to be "awake" during the RTT).
- If PDCCH has not been successfully decoded during the on-duration, the UE shall follow the DRX configuration (i.e. the UE can enter DRX sleep if allowed by the DRX configuration):
  - This applies also for the sub-frames where the UE has been allocated predefined resources.
- If it successfully decodes a PDCCH for a first transmission, the UE shall stay awake and start the inactivity timer (even if a PDCCH is successfully decoded in the sub-frames where the UE has also been allocated predefined resources) until a MAC control message tells the UE to re-enter DRX, or until the inactivity timer expires. In both cases, the DRX cycle that the UE follows after re-entering DRX is given by the following rules:
  - If a short DRX cycle is configured; the UE first follows the short DRX cycle and after a longer period of inactivity the UE follows the long DRX cycle;
  - Else the UE follows the long DRX cycle directly.

NOTE: When DRX is configured, the network should detect whether UE remains in EUTRAN coverage by requesting UE to send periodic signals to the network.

13 QoS

An EPS bearer/E-RAB is the level of granularity for bearer level QoS control in the EPC/E-UTRAN. That is, SDFs mapped to the same EPS bearer receive the same bearer level packet forwarding treatment (e.g. scheduling policy, queue management policy, rate shaping policy, RLC configuration, etc.) [17].

One EPS bearer/E-RAB is established when the UE connects to a PDN, and that remains established throughout the lifetime of the PDN connection to provide the UE with always-on IP connectivity to that PDN. That bearer is referred to as the *default* bearer. Any additional EPS bearer/E-RAB that is established to the same PDN is referred to as a *dedicated* bearer. The initial bearer level QoS parameter values of the default bearer are assigned by the network, based on subscription data. The decision to establish or modify a dedicated bearer can only be taken by the EPC, and the bearer level QoS parameter values are always assigned by the EPC.

An EPS bearer/E-RAB is referred to as a GBR bearer if dedicated network resources related to a Guaranteed Bit Rate (GBR) value that is associated with the EPS bearer/E-RAB are permanently allocated (e.g. by an admission control function in the eNodeB) at bearer establishment/modification. Otherwise, an EPS bearer/E-RAB is referred to as a Non-GBR bearer. A dedicated bearer can either be a GBR or a Non-GBR bearer while a default bearer shall be a Non-GBR bearer.

13.1 Bearer service architecture

The EPS bearer service layered architecture is depicted in Figure 13.1-1 below, where:

- An UL TFT in the UE binds an SDF to an EPS bearer in the uplink direction. Multiple SDFs can be multiplexed onto the same EPS bearer by including multiple uplink packet filters in the UL TFT.
- A DL TFT in the PDN GW binds an SDF to an EPS bearer in the downlink direction. Multiple SDFs can be multiplexed onto the same EPS bearer by including multiple downlink packet filters in the DL TFT.
- An E-RAB transports the packets of an EPS bearer between the UE and the EPC. When an E-RAB exists, there is a one-to-one mapping between this E-RAB and an EPS bearer.
- A data radio bearer transports the packets of an EPS bearer between a UE and an eNB. When a data radio bearer exists, there is a one-to-one mapping between this data radio bearer and the EPS bearer/E-RAB.
- An S1 bearer transports the packets of an E-RAB between an eNodeB and a Serving GW.
- An S5/S8 bearer transports the packets of an EPS bearer between a Serving GW and a PDN GW.
- A UE stores a mapping between an uplink packet filter and a data radio bearer to create the binding between an SDF and a data radio bearer in the uplink.
- A PDN GW stores a mapping between a downlink packet filter and an S5/S8a bearer to create the binding between an SDF and an S5/S8a bearer in the downlink.
- An eNB stores a one-to-one mapping between a data radio bearer and an S1 bearer to create the binding between a data radio bearer and an S1 bearer in both the uplink and downlink.
- A Serving GW stores a one-to-one mapping between an S1 bearer and an S5/S8a bearer to create the binding between an S1 bearer and an S5/S8a bearer in both the uplink and downlink.

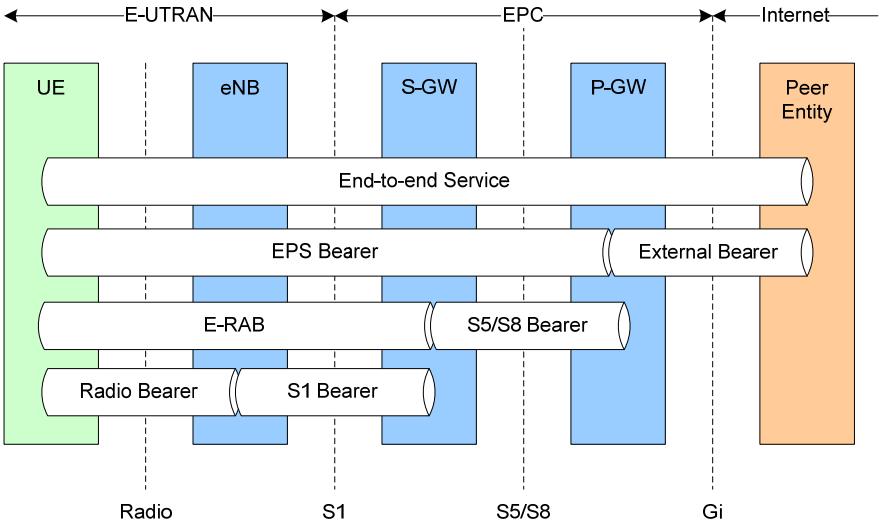

Figure 13.1-1: EPS Bearer Service Architecture

13.2 QoS parameters

The bearer level (i.e. per bearer or per bearer aggregate) QoS parameters are QCI, ARP, GBR, and AMBR [17]. Each EPS bearer/E-RAB (GBR and Non-GBR) is associated with the following bearer level QoS parameters:

- QoS Class Identifier (QCI): scalar that is used as a reference to access node-specific parameters that control bearer level packet forwarding treatment (e.g. scheduling weights, admission thresholds, queue management thresholds, link layer protocol configuration, etc.), and that have been pre-configured by the operator owning the eNodeB. A one-to-one mapping of standardized QCI values to standardized characteristics is captured in [17].
- Allocation and Retention Priority (ARP): the primary purpose of ARP is to decide whether a bearer establishment / modification request can be accepted or needs to be rejected in case of resource limitations. In

addition, the ARP can be used by the eNodeB to decide which bearer(s) to drop during exceptional resource limitations (e.g. at handover).

Each GBR bearer is additionally associated with the following bearer level QoS parameter:

- Guaranteed Bit Rate (GBR): the bit rate that can be expected to be provided by a GBR bearer,

Each APN access, by a UE, is associated with the following QoS parameter:

- per APN Aggregate Maximum Bit Rate (APN-AMBR).

Each UE in state EMM-REGISTERED is associated with the following bearer aggregate level QoS parameter:

- per UE Aggregate Maximum Bit Rate (UE-AMBR).

The definitions of APN AMBR and UE-AMBR are captured in [17].

The GBR denotes bit rate of traffic per bearer while UE-AMBR/APN-AMBR denote bit rate of traffic per group of bearers. Each of those QoS parameters has an uplink and a downlink component.

14 Security

14.1 Overview and Principles

The following principles apply to E-UTRAN security:

- The keys used for NAS and AS protection shall be dependent on the algorithm with which they are used.
- The eNB keys are cryptographically separated from the EPC keys used for NAS protection (making it impossible to use the eNB key to figure out an EPC key).
- The AS (RRC and UP) and NAS keys are derived in the EPC/UE from key material that was generated by a NAS (EPC/UE) level AKA procedure (K_{ASME}) and identified with a key identifier (KSI_{ASME}).
- The eNB key (K_{eNB}) is sent from the EPC to the eNB when the UE is entering ECM-CONNECTED state (i.e. during RRC connection or S1 context setup).
- Separate AS and NAS level security mode command procedures are used. AS level security mode command procedure configures AS security (RRC and user plane) and NAS level security mode command procedure configures NAS security. Both integrity protection and ciphering for RRC are activated within the same AS SMC procedure, but not necessarily within the same message. User plane ciphering is activated at the same time as RRC ciphering.
- Keys stored inside eNBs shall never leave a secure environment within the eNB (except when done in accordance with this or other 3GPP specifications), and user plane data ciphering/deciphering shall take place inside the secure environment where the related keys are stored.
- Key material for the eNB keys is sent between the eNBs during ECM-CONNECTED intra-E-UTRAN mobility.
- A sequence number (COUNT) is used as input to the ciphering and integrity protection. A given sequence number must only be used once for a given eNB key (except for identical re-transmission) on the same radio bearer in the same direction. The same sequence number can be used for both ciphering and integrity protection.
- A hyper frame number (HFN) (i.e. an overflow counter mechanism) is used in the eNB and UE in order to limit the actual number of sequence number bits that is needed to be sent over the radio. The HFN needs to be synchronized between the UE and eNB.
- If corruption of keys is detected, UE has to restart radio level attachment procedure (e.g. similar radio level procedure to idle-to-connected mode transition or initial attachment).
- No integrity protection initialisation number (FRESH).

- Since SIM access is not granted in E-UTRAN [24], idle mode UE not equipped with USIM shall not attempt to reselect to E-UTRAN. To prevent handover to E-UTRAN, UE not equipped with USIM shall not indicate E-UTRA support in UE capability signalling in other RATs.

A simplified key derivation is depicted on Figure 14.1-1 below, where:

- **K_{NASint}** is a key, which shall only be used for the protection of NAS traffic with a particular integrity algorithm This key is derived by UE and MME from K_{ASME} , as well as an identifier for the integrity algorithm.
- **K_{NASenc}** is a key, which shall only be used for the protection of NAS traffic with a particular encryption algorithm. This key is derived by UE and MME from K_{ASME}, as well as an identifier for the encryption algorithm.
- **K_{eNB}** is a key derived by UE and MME from K_{ASME}. K_{eNB} may also be derived by the target eNB from NH at handover. K_{eNB} shall be used for the derivation of K_{RRCint}, K_{RRCenc} and K_{UPenc}, and for the derivation of K_{eNB*} upon handover.
- **K_{eNB*}** is a key derived by UE and source eNB from either K_{eNB} or from a fresh NH. K_{eNB*} shall be used by UE and target eNB as a new K_{eNB} for RRC and UP traffic.
- **K_{UPenc}** is a key, which shall only be used for the protection of UP traffic with a particular encryption algorithm. This key is derived by UE and eNB from K_{eNB}, as well as an identifier for the encryption algorithm.
- **K_{RRCint}** is a key, which shall only be used for the protection of RRC traffic with a particular integrity algorithm. K_{RRCint} is derived by UE and eNB from K_{eNB}, as well as an identifier for the integrity algorithm.
- **K_{RRCenc}** is a key, which shall only be used for the protection of RRC traffic with a particular encryption algorithm. K_{RRCenc} is derived by UE and eNB from K_{eNB} as well as an identifier for the encryption algorithm.
- Next Hop (**NH**) is used by UE and eNB in the derivation of K_{eNB*} for the provision of "forward security" [22]. NH is derived by UE and MME from K_{ASME} and K_{eNB} when the security context is established, or from K_{ASME} and previous NH, otherwise.
- Next Hop Chaining Count (**NCC**) is a counter related to NH (i.e. the amount of Key chaining that has been performed) which allow the UE to be synchronised with the eNB and to determine whether the next **K_{eNB*}** needs to be based on the current K_{eNB} or a fresh NH.

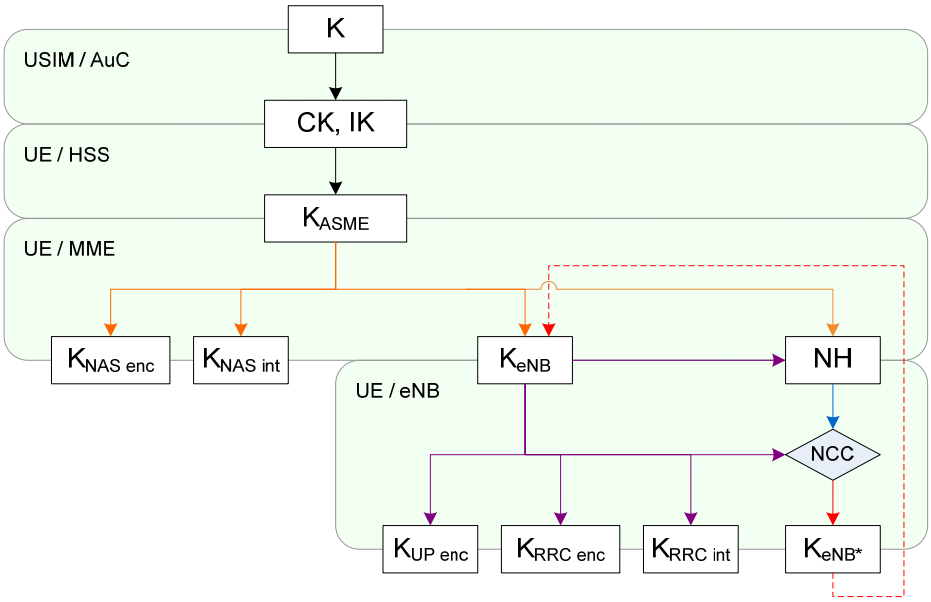

Figure 14.1-1: Key Derivation

The MME invokes the AKA procedures by requesting authentication vectors to the HE (Home environment) if no unused EPS authentication vectors have been stored. The HE sends an authentication response back to the MME that contains a fresh authentication vector, including a base-key named K_{ASME}. Thus, as a result of an AKA run, the EPC and the UE share K_{ASME}. From K_{ASME}, the NAS keys, (and indirectly) K_{eNB} keys and NH are derived. The K_{ASME} is never

transported to an entity outside of the EPC, but K_{eNB} and NH are transported to the eNB from the EPC when the UE transitions to ECM-CONNECTED. From the K_{eNB}, the eNB and UE can derive the UP and RRC keys.

RRC and UP keys are refreshed at handover. K_{eNB*} is derived by UE and source eNB from target PCI, target frequency and K_{eNB} (this is referred to as a *horizontal* key derivation and is indicated to UE with an NCC that does not increase) or from target PCI, target frequency and NH (this is referred to as a *vertical* key derivation and is indicated to UE with an NCC increase). K_{eNB*} is then used as new K_{eNB} for RRC and UP traffic at the target. When the UE goes into ECM-IDLE all keys are deleted from the eNB.

COUNT reusing avoidance for the same radio bearer identity in RRC_CONNECTED mode without K_{eNB} change is left to eNB implementation e.g. by using intra-cell handover, smart management of radio bearer identities or triggering a transition to RRC_IDLE.

In case of HFN de-synchronisation in RRC_CONNECTED mode between the UE and eNB, the UE is pushed to IDLE.

14.2 Security termination points

The table below describes the security termination points.

Table 14.2-1 Security Termination Points

	Ciphering	Integrity Protection
NAS Signalling	Required and terminated in MME	Required and terminated in MME
U-Plane Data	Required and terminated in eNB	Not Required (NOTE 1)
RRC Signalling (AS)	Required and terminated in eNB	Required and terminated in eNB
MAC Signalling (AS)	Not required	Not required
NOTE 1: Integrity protection for U-Plane is not required and thus it is not supported between UE and Serving Gateway or for the transport of user plane data between eNB and Serving Gateway on S1 interface.		

14.3 State Transitions and Mobility

14.3.1 RRC_IDLE to RRC_CONNECTED

As a general principle, on RRC_IDLE to RRC_CONNECTED transitions, RRC protection keys and UP protection keys shall be generated while keys for NAS protection as well as higher layer keys are assumed to be already available in the MME. These higher layer keys may have been established in the MME as a result of an AKA run, or as a result of a transfer from another MME during handover or idle mode mobility [22].

14.3.2 RRC_CONNECTED to RRC_IDLE

On RRC_CONNECTED to RRC_IDLE transitions, eNBs shall delete the keys they store such that state for idle mode UEs only has to be maintained in MME. It is also assumed that eNB does no longer store state information about the corresponding UE and deletes the current keys from its memory. In particular, on connected to idle transitions:

- The eNB and UE deletes NH, K_{eNB} , K_{RRCenc} , K_{RRCint} and K_{UPenc} and related NCC.
- MME and UE keeps K_{ASME}, K_{NASint} and K_{NASenc} stored.

14.3.3 Intra E-UTRAN Mobility

The key hierarchy does not allow, as is, explicit RRC and UP key updates, but RRC and UP keys are derived based on the algorithm identifiers and K_{eNB} which results with new RRC and UP keys at every handover:

- Source eNB and UE independently create K_{eNB*} with the input parameters as described in 3GPP TS 33.401 [22];

- K_{eNB*} is given to Target eNB during the HO preparation phase;
- Both Target eNB and UE considers the new K_{eNB} equal to the received K_{eNB*}.

The handling of HFN and PDCP SN at handover depends on the type of radio bearer:

- SRB: HFN and PDCP SN are reset.
- RLC-UM bearers: HFN and PDCP SN are reset.
- RLC-AM bearers: PDCP SN and HFN are maintained (10.1.2.3).

NOTE: COUNT reusing avoidance is left to network implementation.

14.4 AS Key Change in RRC_CONNECTED

If AS Keys (K_{UPenc} , K_{RRCint} and K_{RRCenc}) need to be changed in RRC_CONNECTED, an intra-cell handover shall be used.

14.5 Security Interworking

Inter-RAT handover from UTRAN to E-UTRAN is only supported after activation of integrity protection in UTRAN. Security may be activated in the target RAN using null ciphering algorithms. If ciphering was not running in UTRAN, it will be activated at handover to E-UTRAN. Integrity protection shall be activated in E-UTRAN on handover from UTRAN/GERAN.

For E-UTRAN to UTRAN/GERAN mobility, the MME shall derive and transfer to the SGSN a confidentially key and an integrity key derived from K_{ASME} and other input parameters as specified in 3GPP TS 33.401 [22]. Based on this information, the SGSN can in turn derive appropriate keys to be used in the target RAN.

Similarly for UTRAN/GERAN to E-UTRAN mobility, the SGSN shall derive and transfer to the MME a confidentially key and an integrity key CK and IK. Based on this information and other input paramaters as specified in 3GPP TS 33.401 [22], the MME and UE can in turn derive K_{ASME}.

15 MBMS

For MBMS, the following definitions are introduced:

MBSFN Synchronization Area: an area of the network where all NodeBs/eNodeBs can be synchronized and perform MBSFN transmissions. MBSFN Synchronization Areas are capable of supporting one or more MBSFN Areas. On a given frequency layer, a NodeB/eNodeB can only belong to one MBSFN Synchronization Area. MBSFN Synchronization Areas are independent from the definition of MBMS Service Areas

MBSFN Transmission or a transmission in MBSFN mode: a simulcast transmission technique realised by transmission of identical waveforms at the same time from multiple cells. An MBSFN Transmission from multiple cells within the MBSFN Area is seen as a single transmission by a UE.

MBSFN Area: a MBSFN Area consists of a group of cells within an MBSFN Synchronization Area of a network, which are co-ordinated to achieve a MBSFN Transmission. A cell within an MBSFN Synchronization Area may form part of multiple MBSFN Areas, each characterized by different transmitted content and participating set of cells.

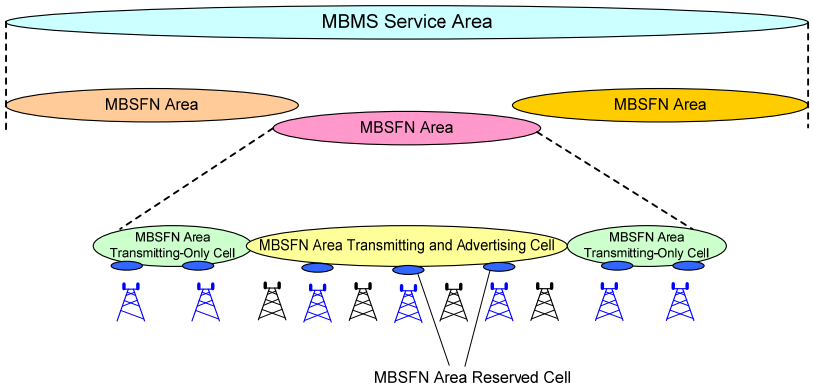

Figure 15-1: MBMS Definitions

MBSFN Area Transmitting and Advertising Cell: A cell within a MBSFN Area which is contributing to the MBSFN Transmission and advertises within the cell the availability of the MBSFN Transmission.

MBSFN Area Transmitting-Only Cell: A cell within a MBSFN Area which is contributing to the MBSFN Transmission but does not advertise within the cell the availability of the MBSFN Transmission. The need for this type of cell is FFS.

MBSFN Area Reserved Cell: A cell within a MBSFN Area which does not contribute to the MBSFN Transmission. The cell may be allowed to transmit for other services but at restricted power on the resource allocated for the MBSFN transmission e.g. PTP for users at the centre of the cell.

15.1 General

In E-UTRAN, MBMS can be provided on a frequency layer dedicated to MBMS (set of cells dedicated to MBMS transmission i.e. set of "MBMS dedicated cells") and/or on a frequency layer shared with non-MBMS services (set of cells supporting both unicast and MBMS transmissions i.e. set of "Unicast/MBMS mixed cells"). In both cases, single frequency network mode of operation is possible for MBMS transmission (MBSFN).

MBMS reception is possible for UEs in RRC_CONNECTED or RRC_IDLE states. Whenever receiving MBMS services, a user shall be notified of an incoming call, and originating calls shall be possible.

15.1.1 E-MBMS Logical Architecture

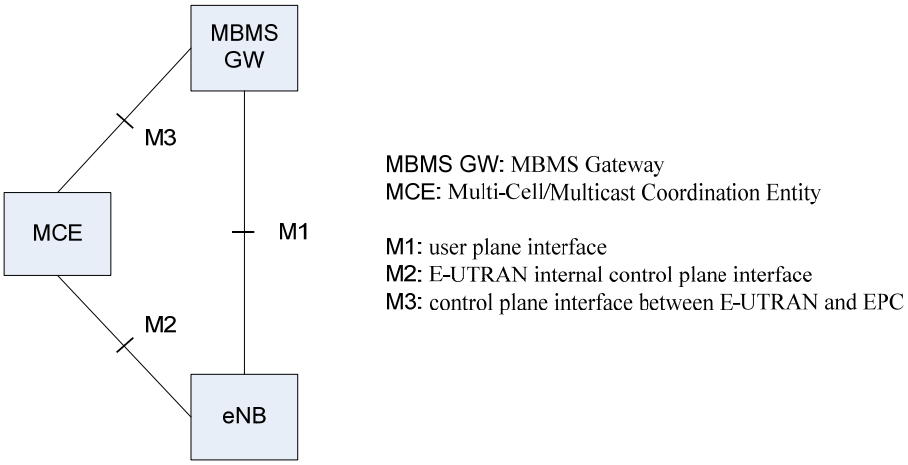

Figure 15.1.1-1: E-MBMS Logical Architecture

Figure 15.1.1-1 depicts the E-MBMS Logical Architecture.

NOTE: Additional horizontal interfaces e.g. MCE to MCE is FFS.

Multi-cell/multicast Coordination Entity (MCE)

The MCE is a logical entity – this does not preclude the possibility that it may be part of another network element – whose functions are the allocation of the radio resources used by all eNBs in the MBSFN area for multi-cell MBMS transmissions using MBSFN operation. Besides allocation of the time/ frequency radio resources this also includes deciding the further details of the radio configuration e.g. the modulation and coding scheme. The MCE is involved in MBMS Session Control Signalling. The MCE does not perform UE - MCE signalling.

E-MBMS Gateway (MBMS GW)

The MBMS GW is a logical entity – this does not preclude the possibility that it may be part of another network element – that is present between the BMSC and eNBs whose principal functions is the sending/broadcasting of MBMS packets with the SYNC protocol to each eNB transmitting the service. The MBMS GW hosts the PDCP layer of the user plane and uses IP Multicast as the means of forwarding MBMS user data to the eNB. The MBMS GW performs MBMS Session Control Signalling (Session start/stop) towards the E-UTRAN.

Control Plane Interfaces

"M3" Interface: MCE – MBMS GW

An Application Part is defined for this interface between E-MBMS Gateway and MCE. This application part allows for MBMS Session Control Signalling on E-RAB level (i.e. does not convey radio configuration data). The procedures comprise e.g. MBMS Session Start and Stop. SCTP is used as signalling transport i.e. Point-to-Point signalling is applied.

"M2" Interface: MCE – eNB

An Application Part is defined for this interface, which conveys at least radio configuration data for the multi-cell transmission mode eNBs and Session Control Signalling. SCTP is used as signalling transport i.e. Point-to-Point signalling is applied.

User Plane Interface

"M1" Interface: MBMS GW – eNB

This interface is a pure user plane interface. Consequently no Control Plane Application Part is defined for this interface. IP Multicast is used for point-to-multipoint delivery of user packets for both single cell and multi-cell transmission.

Deployment consideration

It is not precluded that M3 interface can be terminated in eNBs. In this case MCE is considered as being part of eNB. Therefore M2 does not exist in this scenario. This is depicted in Figure 15.1.1-2 which depicts two envisaged deployment alternatives. In the scenario depicted on the left MCE is deployed in a separate node. In the scenario on the right MCE is part of the eNBs. These eMBMS architecture deployment alternatives shall be applicable to both multi-cell and single cell transmission mode.

.

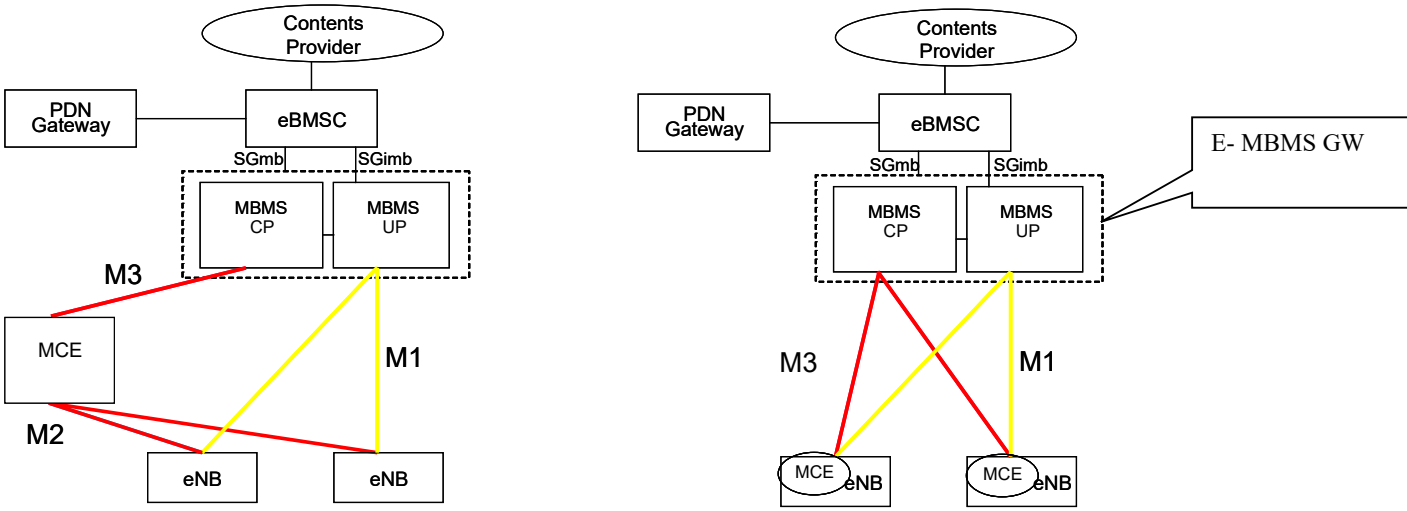

Figure 15.1.1-2: eMBMS Architecture deployment alternatives

15.1.2 E-MBMS User Plane Protocol Architecture

The overall U-plane architecture of content synchronization is shown in Figure 15.1-1. This architecture is based on the functional allocation for Unicast and the SYNC protocol layer is defined additionally on transport network layer to support content synchronization mechanism.

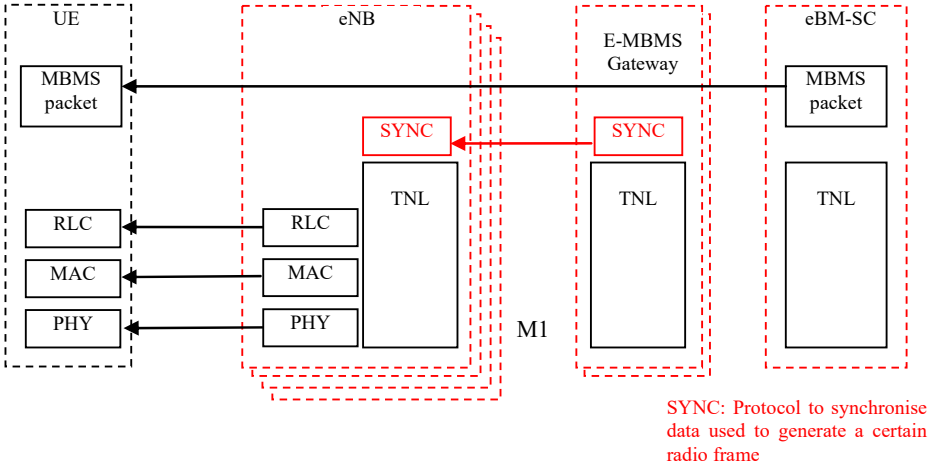

Figure 15.1.2-1: The overall u-plane architecture of the MBMS content synchronization

The SYNC protocol is defined as a protocol to carry additional information that enable eNBs to identify the timing for radio frame transmission and detect packet loss. The SYNC protocol is applicable to DL and may be specified as a part of GTP-U, or as an independent protocol.

If PDCP (Header Compression) is used, it is located in the E-MBMS GW for both multi-cell and single-cell transmission.

Complying with the content synchronization mechanism is required for an eNB distributing a MBMS service for Multi-Cell transmission. An eNB transmitting a service in single cell only should not be required to comply with the stringent timing requirements indicated by SYNC protocol.

15.2 MBMS Cells

An E-UTRAN cell supporting MBMS is either an MBMS-dedicated cell or an MBMS/Unicast-mixed cell.

15.2.1 MBMS-dedicated cell

When a cell belongs to a frequency layer dedicated to MBMS transmission:

- MTCH and MCCH are mapped on MCH or DL-SCH (FFS) for p-t-m transmission;
- No uplink;
- No counting mechanism in another (unicast) cell supported;
- No support for unicast data transfer in the cell;
- The occurrence of paging messages on the frequency layer dedicated to MBMS transmission is FFS:
  - If paging messages were allowed, the UE could answer in a non-E-UTRA cell e.g. UTRA cell (FFS);

15.2.2 MBMS/Unicast-mixed cell

When a cell does not belong to a frequency layer dedicated to MBMS transmission:

- MTCH and MCCH are mapped on MCH or DL-SCH for p-t-m transmission;
- Transmission of both unicast and MBMS in the cell is done in a co-ordinated manner.

15.3 MBMS Transmission

15.3.1 General

Transmission of MBMS in E-UTRAN is either a single-cell transmission or a multi-cell transmission. In both cases, MCCH terminates at the eNB.

15.3.2 Single-cell transmission

Single-cell transmission of MBMS is characterized by:

- MBMS is transmitted only on the coverage of a specific cell;
- Combining of MBMS transmission from multiple cells is not supported;
- MTCH and MCCH are mapped on DL-SCH for p-t-m transmission;
- Scheduling is done by the eNB;
- Multiple UEs can be allocated dedicated uplink feedback channels identical to those used in unicast transmission, which enables them to report HARQ Ack/Nack and CQI. Where such a feedback mechanism is configured, AMC is applied, and HARQ retransmissions are made on DL-SCH using a group (service specific) RNTI in a time frame that is co-ordinated with the original MTCH transmission. All UEs are able to receive the retransmissions and combine them with the original transmissions at the HARQ level.
- UEs that are allocated a dedicated uplink feedback channel are in RRC_CONNECTED state.
- To avoid unnecessary MBMS transmission on MTCH in a cell where there is no MBMS user, MCCH may announce only the availability of MBMS service(s) and the network can detect the presence in a cell of at least one MBMS user interested in the MBMS service (e.g. by polling or through UE service request) before starting the transmission on MTCH. It is FFS whether or not it is needed to count to a greater granularity the number of UEs in a cell interested in an MBMS service.

For single-cell transmission, an eNB is not required to comply with the stringent timing requirements indicated by SYNC protocol. The following principles still applies for the single transmission:

1. An E-MBMS GW sends/broadcasts MBMS packet with the SYNC protocol to each eNB transmitting the service.
2. The SYNC protocol provides additional information so that the eNBs identify the transmission radio frame(s). The E-MBMS GW does not need accurate knowledge of radio resource allocation in terms of exact time division (e.g. exact start time of the radio frame transmission).
3. The segmentation/concatenation is needed for MBMS packets and should be totally up to the RLC/MAC layer in eNB, without taking into account any indication in the SYNC protocol.

15.3.3 Multi-cell transmission

Multi-cell transmission of MBMS is characterized by:

- Synchronous transmission of MBMS within its MBSFN Area;
- Combining of MBMS transmission from multiple cells is supported;
- MTCH and MCCH are mapped on MCH for p-t-m transmission;
- The MBSFN Synchronization Area, the MBSFN Area, and the MBSFN Transmitting, Advertising, and Reserved cells are semi-statically configured e.g. by O&M.
- Scheduling of each MCH is done by the MCE.
- AMC based on non-AS level feedback is FFS.

A carrier frequency may support more than one MCH, where the physical resource allocation to a specific MCH is made by specifying a pattern of subframes, not necessarily adjacent in time, to that MCH. This pattern is called a MCH Subframe Allocation Pattern (MSAP). Multiple MBMS services can be mapped to the same MCH and one MCH contains data belonging to only one MBSFN Area. Whether there is a 1-to-1 mapping between MCH and MBSFN Area is FFS. The MSAP for every MCH carrying MTCH is signalled on MCCH. At such an MSAP occasion:

- The eNB applies MAC multiplexing of different MTCH's to be transmitted on this MCH. The transmission order of MTCHs is signalled (FFS whether implicitly or explicitly) in the MCCH;
- Dynamic scheduling information can be provided in the MSAP occasion to assist the UE in choosing which subframes it needs to receive, both when services are multiplexed onto the MCH and when only a single service is transmitted on the MCH. It is FFS how the scheduling information is carried (e.g. in a MAC control element, or a separate logical channel MSCH). The dynamic scheduling information carries the mapping of MTCHs to the sub-frames of the associated MSAP occasion. This mapping is based on the indexing of sub-frames belonging to one MSAP occasion.

The content synchronization for multi-cell transmission is provided by the following principles:

1. All eNBs in a given MBSFN Synchronization Area have a synchronised radio frame timing such that the radio frames are transmitted at the same time.
2. All eNBs have the same configuration of RLC/MAC/PHY for each MBMS service, and identical information (e.g. time information, transmission order/priority information) such that synchronized dynamic scheduling in the eNBs is ensured. These are indicated in advance by the MCE.
3. An E-MBMS GW sends/broadcasts MBMS packet with the SYNC protocol to each eNB transmitting the service.
4. The SYNC protocol provides additional information so that the eNBs identify the transmission radio frame(s). The E-MBMS GW does not need accurate knowledge of radio resource allocation in terms of exact time division (e.g. exact start time of the radio frame transmission).
5. eNB buffers MBMS packet and waits for the transmission timing indicated in the SYNC protocol.

6. The segmentation/concatenation is needed for MBMS packets and should be totally up to the RLC/MAC layer in eNB.
7. The SYNC protocol provides means to detect packet loss(es) and supports a recovery mechanism robust against loss of consecutive PDU packets (MBMS Packets with SYNC Header).
8. For the packet loss case the transmission of radio blocks potentially impacted by the lost packet should be muted.
9. The mechanism supports indication or detection of MBMS data burst termination (e.g. to identify and alternately use available spare resources related to pauses in the MBMS PDU data flow).

15.3.4 MBMS Reception States

UEs that are receiving MTCH transmissions and are taking part in at least one MBMS feedback scheme will be in RRC_CONNECTED state. UEs receiving MTCH transmissions without taking part in an MBMS feedback mechanism can be in RRC_IDLE or RRC_CONNECTED state.

For the reception of single-cell transmission of MTCH, an eNB can require a UE to be in RRC_CONNECTED state. The signalling by which a UE is triggered to move to RRC_CONNECTED state solely for single-cell reception purposes is carried on MCCH.

15.3.5 MCCH Structure

The following principles govern the MCCH structure:

- BCCH indicates the scheduling of one or two Primary MCCH (one for single cell transmission on DL-SCH, one for multi-cell transmission on MCH) where the Primary MCCH on MCH can also point to additional Secondary MCCH(s) on MCH if any.

NOTE: the need for Secondary MCCH(s) when the Primary MCCH is mapped on DL-SCH is FFS.

- BCCH only points to the resources where the Primary MCCH(s) can be found i.e. it does not indicate the availability of the services.
- The primary MCCH is sent on DL-SCH for single cell transmission and on MCH for multi-cell transmission on an MBSFN area.
- Multiple overlapping MTCH-MBSFN areas can result in multiple MCCHs, for which using different MBSFN areas should be possible (using Secondary MCCHs).
- The MCCH-MBSFN area is not necessarily the same as the MTCH-MBSFN area i.e. MCCH can be either on a different MCH than the MCH carrying “advertised” MTCH, or multiplexed on the same MCH as the one carrying “advertised” MTCH.

15.4 Service Continuity

As combinations of the possible MBMS cell types and transmission modes, various deployment scenarios come into question. Among them, E-UTRAN provides the necessary optimization mechanisms to support seamless MBMS continuity between:

1) MBSFN and single-cell transmission on a shared frequency layer;
2) MBSFN on a dedicated frequency layer and single-cell transmission on a shared frequency layer;
3) Cells providing single-cell transmission on a shared frequency layer.

For the reception of single-cell transmission of MTCH, UEs that are receiving MBMS service(s) in RRC_CONNECTED state (either directed to the state to receive the MBMS service or in the state already for other reasons and the eNB is aware that the UE is receiving the particular MBMS service(s)), can be provided with target cell MTCH information for these services via the handover related signalling. The serving eNB will trigger the target eNB to prepare for the handover e.g. to obtain the MBMS service if necessary.

UEs that are receiving MBMS service(s) in RRC_IDLE state performing cell reselection or are in RRC_CONNECTED state and which do not receive target cell information as part of handover signalling, should obtain target cell MTCH information from the target cell MCCH or, if supported, serving cell MCCH information (FFS). If the UE was in RRC_CONNECTED state and the source eNB was aware that it is receiving the particular MBMS service(s) the serving eNB could trigger the target eNB to prepare for the handover e.g. to obtain the MBMS service if necessary.

15.5 Network sharing

Network sharing of MBMS resources among multiple operators of the same country is supported, with focus on, but not limited to, sharing of a dedicated-carrier MBSFN. MBMS network sharing shall not require unicast network sharing. Unicast mobility shall not be affected by the sharing of MBMS resources by operators.

NOTE: it is FFS whether this is based on dual-receiver solutions.

15.6 Network Functions for Support of Multiplexing

Considerable gain in radio resource efficiency can be achieved by multiplexing several E-MBMS services on a single MCH. The services that share the resources are called E-MBMS Service Multiplex. The amount of common radio resources allocated to such an E-MBMS Service Multiplex can be smaller than the sum of radio resources, which would need to be allocated for the individual services without multiplexing. This represents the statistical multiplexing gain.

The entity managing the E-MBMS Service Multiplex e.g. deciding which services are to be multiplexed is FFS. The duration of each E-MBMS service may be different, so there is may be a need to manage the Service Multiplex dynamically, i.e. addition or removal of services into/from the E-MBMS Service Multiplex. The MCE allocates the optimal amount of resources to multiplexed services, using service related information. MBSFN transmission is ensured by identical multiplexing of the services within the MBMS-GW or different eNBs. The location of the multiplexing function is FFS.

These functions are supported by respective signalling and by the SYNC protocol on M1, the details are FFS.

15.7 Procedures

15.7.1 Procedures for Broadcast mode

15.7.1.1 Session Start procedure

The purpose of the MBMS Session Start procedure is to request the E-UTRAN to notify UEs about an upcoming MBMS Session of a given MBMS Bearer Service and to establish an MBMS E-RAB for this MBMS Session. The MBMS Session Start procedure is triggered by the EPC.

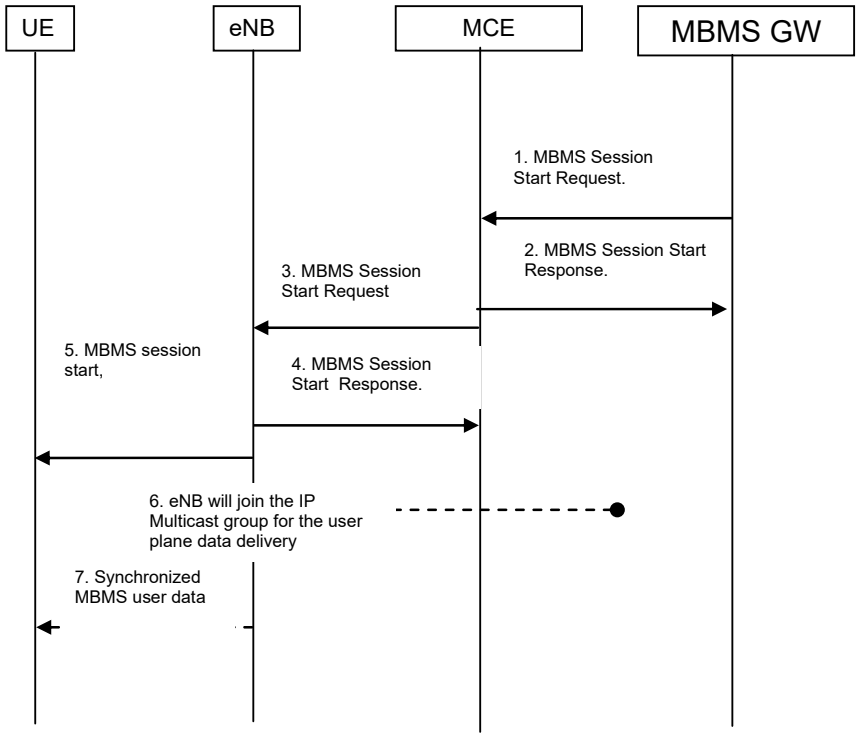

Figure 15.7.1.1-1. Session Start procedure

1. The MBMS GW entity sends MBMS session start request message to the MCE(s) controlling eNBs in the targeted MBMS service area. The message includes the IP multicast address and session attributes.
2. MCE confirms the reception of the MBMS Session Start request to the MBMS GW. It is FFS whether this message is transmitted after message 4.
3. MCE sends the MBMS Session Start message to the eNBs in the targeted MBMS service area. In addition to the session attributes this message provides radio bearer configuration for MBSFN transmission.
4. eNB confirms the reception of the MBMS Session Start message.
5. eNB sends the MBMS Session Start message to UEs. The location of the message is FFS, other positions are after messages 6 or 7. The message details are FFS.
6. eNB joins the IP multicast group to receive the MBMS User Plane data.
7. eNB sends the MBMS data to radio interface at the determined time.

15.7.1.2 Session Stop procedure

The MBMS Session Stop procedure is to request the E-UTRAN to notify UEs about the end of a given MBMS Session and to release the corresponding MBMS E-RAB this MBMS Session. The MBMS Session Stop procedure is triggered by the EPC.

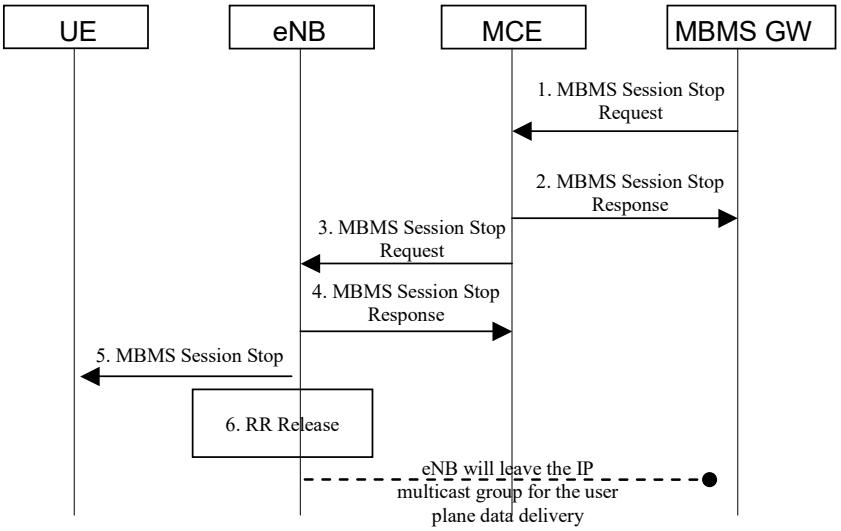

Figure 15.7.1.2-1. Session Stop procedure

1. The MBMS GW entity sends MBMS session stop request message to the MCE(s) controlling eNBs in the targeted MBMS service area.
2. MCE confirms the reception of the MBMS Session stop request to the MBMS GW.
3. MCE forwards the MBMS Session stop message to the eNBs in the targeted MBMS service area.
4. eNB confirms the reception of the MBMS Session stop message.
5. eNB sends the MBMS Session stop message to UEs. The message details are FFS.
6. The corresponding E-RAB is released, and eNB leaves the the IP multicast group.

16 Radio Resource Management aspects

The purpose of radio resource management (RRM) is to ensure the efficient use the available radio resources and to provide mechanisms that enable E-UTRAN to meet radio resource related requirements identified in sub-clause 10 of 3GPP TR 25.913 [2]. In particular, RRM in E-UTRAN provides means to manage (e.g. assign, re-assign and release) radio resources taking into account single and multi-cell aspects.

16.1 RRM functions

16.1.1 Radio Bearer Control (RBC)

The establishment, maintenance and release of Radio Bearers involve the configuration of radio resources associated with them. When setting up a radio bearer for a service, radio bearer control (RBC) takes into account the overall resource situation in E-UTRAN, the QoS requirements of in-progress sessions and the QoS requirement for the new service. RBC is also concerned with the maintenance of radio bearers of in-progress sessions at the change of the radio resource situation due to mobility or other reasons. RBC is involved in the release of radio resources associated with radio bearers at session termination, handover or at other occasions.

RBC is located in the eNB.

16.1.2 Radio Admission Control (RAC)

The task of radio admission control (RAC) is to admit or reject the establishment requests for new radio bearers. In order to do this, RAC takes into account the overall resource situation in E-UTRAN, the QoS requirements, the priority

levels and the provided QoS of in-progress sessions and the QoS requirement of the new radio bearer request. The goal of RAC is to ensure high radio resource utilization (by accepting radio bearer requests as long as radio resources available) and at the same time to ensure proper QoS for in-progress sessions (by rejecting radio bearer requests when they cannot be accommodated).

RAC is located in the eNB.

16.1.3 Connection Mobility Control (CMC)

Connection mobility control (CMC) is concerned with the management of radio resources in connection with idle or connected mode mobility. In idle mode, the cell reselection algorithms are controlled by setting of parameters (thresholds and hysteresis values) that define the best cell and/or determine when the UE should select a new cell. Also, E-UTRAN broadcasts parameters that configure the UE measurement and reporting procedures. In connected mode, the mobility of radio connections has to be supported. Handover decisions may be based on UE and eNB measurements. In addition, handover decisions may take other inputs, such as neighbour cell load, traffic distribution, transport and hardware resources and Operator defined policies into account.

CMC is located in the eNB.

16.1.4 Dynamic Resource Allocation (DRA) - Packet Scheduling (PS)

The task of dynamic resource allocation (DRA) or packet scheduling (PS) is to allocate and de-allocate resources (including buffer and processing resources and resource blocks (i.e. chunks)) to user and control plane packets. DRA involves several sub-tasks, including the selection of radio bearers whose packets are to be scheduled and managing the necessary resources (e.g. the power levels or the specific resource blocks used). PS typically takes into account the QoS requirements associated with the radio bearers, the channel quality information for UEs, buffer status, interference situation, etc. DRA may also take into account restrictions or preferences on some of the available resource blocks or resource block sets due to inter-cell interference coordination considerations.

DRA is located in the eNB.

16.1.5 Inter-cell Interference Coordination (ICIC)

Inter-cell interference coordination has the task to manage radio resources (notably the radio resource blocks) such that inter-cell interference is kept under control. ICIC is inherently a multi-cell RRM function that needs to take into account information (e.g. the resource usage status and traffic load situation) from multiple cells. The preferred ICIC method may be different in the uplink and downlink.

ICIC is located in the eNB.

16.1.6 Load Balancing (LB)

Load balancing has the task to handle uneven distribution of the traffic load over multiple cells. The purpose of LB is thus to influence the load distribution in such a manner that radio resources remain highly utilized and the QoS of in-progress sessions are maintained to the extent possible and call dropping probabilities are kept sufficiently small. LB algorithms may result in hand-over or cell reselection decisions with the purpose of redistribute traffic from highly loaded cells to underutilized cells.

LB is located in the eNB.

16.1.7 Inter-RAT Radio Resource Management

Inter-RAT RRM is primarily concerned with the management of radio resources in connection with inter-RAT mobility, notably inter-RAT handover. At inter-RAT handover, the handover decision may take into account the involved RATs resource situation as well as UE capabilities and Operator policies. The importance of Inter-RAT RRM may depend on the specific scenario in which E-UTRAN is deployed. Inter-RAT RRM may also include functionality for inter-RAT load balancing for idle and connected mode UEs.

16.1.8 Subscriber Profile ID for RAT/Frequency Priority

The RRM strategy in E-UTRAN may be based on user specific information.

The Subscriber Profile ID for RAT/Frequency Priority (SPID) parameter received by the eNB via the S1 interface is an index referring to user information (e.g. mobility profile, service usage profile). The information is UE specific and applies to all its Radio Bearers.

This index is mapped by the eNB to locally defined configuration in order to apply specific RRM strategies (e.g. to define RRC_IDLE mode priorities and control inter-RAT/inter frequency handover in RRC_CONNECTED mode).

16.2 RRM architecture

16.2.1 Centralised Handling of certain RRM Functions

16.2.2 De-Centralised RRM

16.2.2.1 UE History Information

The source eNB collects and stores the UE History Information for as long as the UE stays in one of its cells.

When information needs to be discarded because the list is full, such information will be discarded in order of its position in the list, starting with the oldest cell record.

The resulting information is then used in subsequent handover preparations by means of the Handover Preparation procedures over the S1 and X2 interfaces, which provide the target eNB with a list of previously visited cells and associated (per-cell) information elements. The Handover Preparation procedures also trigger the target eNB to start collection and storage of UE history Information and thus to propagate the collected information.

16.2.3 Load balancing control

17 RF aspects

17.1 Spectrum deployments

18 UE capabilities

RRC signalling carries AS capabilities and NAS signalling carries NAS capabilities. The UE capability information is stored in the MME. In the uplink, no capability information is sent early in e.g. RRCConnectionRequest message. In the downlink, enquiry procedure of the UE capability is supported.

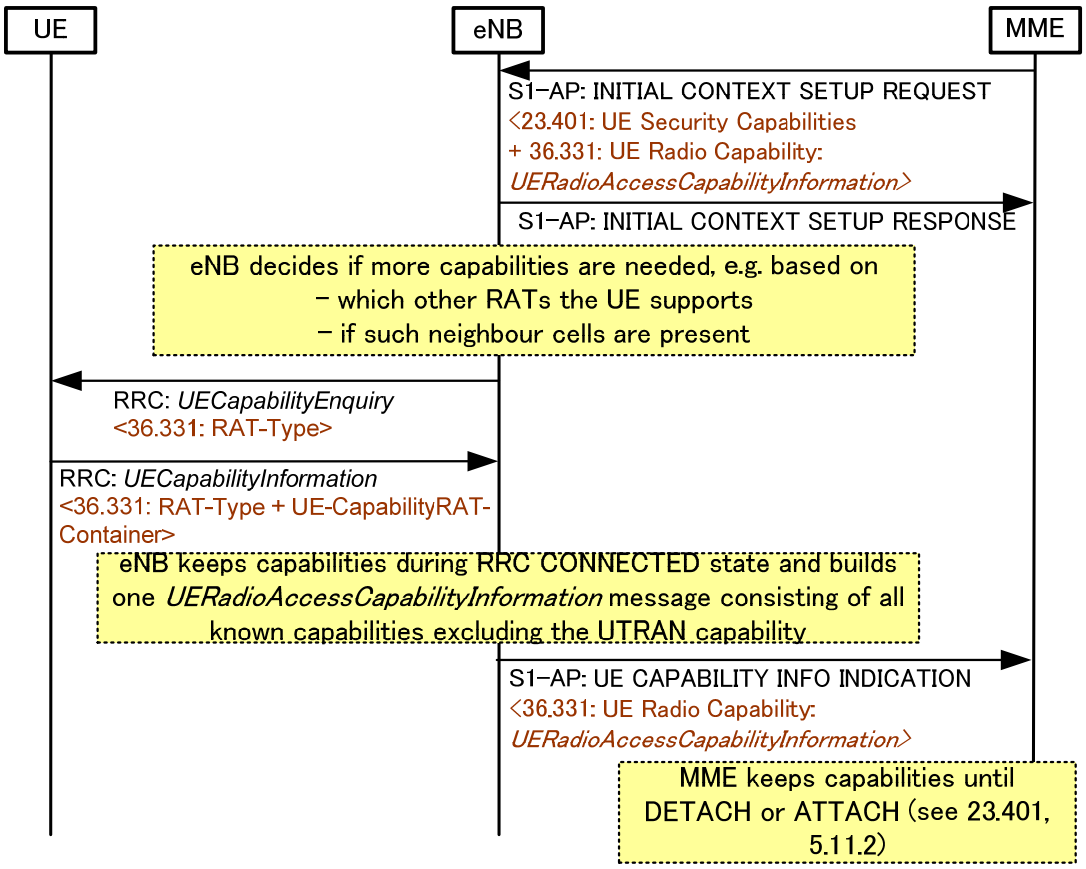

Figure 18-1: Initial UE Capability Handling

The MME stores the UE Radio Capability uploaded in the UE CAPABILITY INFO INDICATION message.

The possible RAT-Types in Rel-8 are: EUTRAN, UTRAN, GERAN-PS, GERAN-CS, CDMA2000-1XRTT. The GERAN capability is divided into separate parts. MS Classmark 2 and Classmark 3 are used for CS domain (in both AS and NAS) and MS Radio Access Capability is used for PS domain. The main part of CDMA2000 capabilities is not handled by the eNB or the MME, but is exchanged via tunnelling (see 10.3.2). The small part of CDMA2000 capabilities (for CDMA2000-1XRTT) is needed for the eNB to be able to build messages for the target CDMA2000 RNC (see 10.3.2).

The eNB may acquire the UE capabilities after a Handover completion. The UE capabilities are then uploaded to the MME.

Usually during handover preparation, the source RAN node transfers both the UE source RAT capabilities and the target RAT capabilities to the target RAN node, in order to minimize interruptions and to follow the principles in subclause 10.2.2. This is described in subclause 19.2.2.5.6. However at Handover from UTRAN to GERAN or EUTRAN, it is optional to forward the UTRAN capabilities to the target RAN. The source RAN is not mandated to acquire other RAT capabilities (i.e. other than the source and target RAT capabilities) in order to start a handover preparation.

The UTRAN capabilities, i.e. the INTER RAT HANDOVER INFO, include START-CS, START-PS and "predefined configurations", which are "dynamic" IEs. In order to avoid the START values desynchronisation and the key replaying issue, the eNB always enquiry the UE UTRAN capabilities at transition from RRC_IDLE to RRC_CONNECTED and before Handover to UTRAN. The eNB does not upload the UE UTRAN capabilities to the MME.

19 S1 Interface

19.1 S1 User plane

The S1 user plane interface (S1-U) is defined between the eNB and the S-GW. The S1-U interface provides non guaranteed delivery of user plane PDUs between the eNB and the S-GW. The user plane protocol stack on the S1 interface is shown in Figure 19.1-1. The transport network layer is built on IP transport and GTP-U is used on top of UDP/IP to carry the user plane PDUs between the eNB and the S-GW.

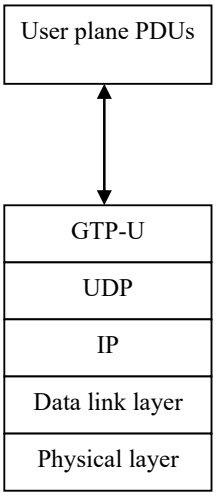

Figure 19.1-1: S1 Interface User Plane (eNB - S-GW)

19.2 S1 Control Plane

The S1 control plane interface (S1-MME) is defined between the eNB and the MME. The control plane protocol stack of the S1 interface is shown on Figure 19.2-1. The transport network layer is built on IP transport, similarly to the user plane but for the reliable transport of signalling messages SCTP is added on top of IP. The application layer signalling protocol is referred to as S1-AP (S1 Application Protocol).

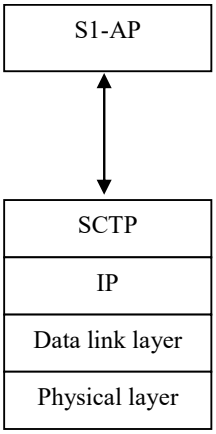

Figure 19.2-1: S1 Interface Control Plane (eNB-MME)

The SCTP layer provides the guaranteed delivery of application layer messages.

In the transport IP layer point-to-point transmission is used to deliver the signalling PDUs.

A single SCTP association per S1-MME interface instance shall be used with one pair of stream identifiers for S1-MME common procedures. Only a few pairs of stream identifiers should be used for S1-MME dedicated procedures. MME communication context identifiers that are assigned by the MME for S1-MME dedicated procedures and eNB communication context identifiers that are assigned by the eNB for S1-MME dedicated procedures shall be used to distinguish UE specific S1-MME signalling transport bearers. The communication context identifiers are conveyed in the respective S1-AP messages.

19.2.1 S1 Interface Functions

Note: The following list of S1 functions reflects the status of agreements in RAN3, might be extended in forthcoming meetings.

- E-RAB Service Management function:
  - Setup, Modify, Release.
- Mobility Functions for UEs in ECM-CONNECTED:
  - Intra-LTE Handover;
  - Inter-3GPP-RAT Handover.
- S1 Paging function:
- NAS Signalling Transport function;
- S1-interface management functions:
  - Error indication;
  - Reset.
- Network Sharing Function;
- Roaming and Area Restriction Support function;
- NAS Node Selection Function;
- Initial Context Setup Function;
- UE Context Modification Function;
- MME Load balancing Function;
- Location Reporting Function;
- ETWS Message Transmission Function;
- Overload function;
- RAN Information Management Function;
- Configuration Transfer Function.
- S1 CDMA2000 Tunnelling function.

19.2.1.1 S1 Paging function

The paging function supports the sending of paging requests to all cells of the TA(s) the UE is registered.

Paging requests are sent to the relevant eNBs according to the mobility information kept in the UE's MM context in the serving MME.

19.2.1.2 S1 UE Context Management function

In order to support UEs in ECM-CONNECTED, UE contexts need to be managed, i.e. established and released in the eNodeB and in the EPC to support user individual signalling on S1.

19.2.1.3 Initial Context Setup Function

The Initial Context Setup function supports the establishment of the necessary overall initial UE Context including E-RAB context, Security context, roaming restriction, UE capability information, Subscriber Profile ID for RAT/Frequency Priority, UE S1 signalling connection ID, etc. in the eNB to enable fast Idle-to-Active transition.

In addition to the setup of overall initial UE Contexts, Initial Context Setup function also supports the piggy-backing of the corresponding NAS messages. Initial Context Setup is initiated by the MME.

19.2.1.3a UE Context Modification Function

The UE Context Modification function supports the modification of UE Context in eNB for UEs in active state.

19.2.1.4 Mobility Functions for UEs in ECM-CONNECTED

19.2.1.4.1 Intra-LTE Handover

The Intra-LTE-Handover function supports mobility for UEs in ECM-CONNECTED and comprises the preparation, execution and completion of handover via the X2 and S1 interfaces.

19.2.1.4.2 Inter-3GPP-RAT Handover

The Inter-3GPP-RAT Handover function supports mobility to and from other 3GPP-RATs for UEs in ECM-CONNECTED and comprises the preparation, execution and completion of handover via the S1 interface.

19.2.1.5 E-RAB Service Management function

The E-RAB Service management function is responsible for establishing, modifying and releasing E-UTRAN resources for user data transport once a UE context is available in the eNB. The establishment and modification of E-UTRAN resources is triggered by the MME and requires respective QoS information to be provided to the eNB. The release of E-UTRAN resources is triggered by the MME either directly or following a request received from the eNB (optional).

19.2.1.6 NAS Signalling Transport function

The NAS Signalling Transport function provides means to transport a NAS message (e.g. for NAS mobility management) for a specific UE on the S1 interface.

19.2.1.7 NAS Node Selection Function (NNSF)

The interconnection of eNBs to multiple MME/Serving S-GWs is supported in the E-UTRAN/EPC architecture. Therefore a NAS node selection function is located in the eNB to determine the MME association of the UE, based on the UE's temporary identifier, which was assigned to the UE by the CN node (e.g. MME or SGSN).

NOTE: In case the UE's temporary identifier is assigned by the SGSN, respective mapping rules are defined in [26].

Depending on the actual scenario the NNSF determines the UE's MME association either based its S-TMSI (e.g. at service request) or based on its GUMMEI and selected PLMN (e.g. at attach or tracking area update in non-registered TA).

This functionality is located in the eNB only and enables proper routing via the S1 interface. On S1, no specific procedure corresponds to the NAS Node Selection Function.

19.2.1.8 S1-interface management functions

The S1-interface management functions provide

- means to ensure a defined start of S1-interface operation (reset)
- means to handle different versions of application part implementations and protocol errors (error indication)

19.2.1.9 MME Load balancing Function

MME Load balancing is the function which achieves load-balanced MMEs with respect to their processing capacity within a pool area during system operation. The means to load-balance MMEs is to distribute UEs newly entering the pool to different MMEs in the MME pool. In addition the MME load balancing function is able to achieve equally loaded MMEs within a pool area after the introduction of a new MME and after the removal of a MME from the network.

The support of the MME load balancing function is achieved by indicating the relative MME capacity in the S1 Setup procedure to all eNBs served by the MMEs of the pool area per MME. In order to support the introduction and/or removal of MMEs the MME initiated S1 setup update procedure may be used by the operator indicating relative MME capacity value changes. The indicated relative MME capacity steers the UE assignment for UEs newly entering the MME pool.

19.2.1.10 Location Reporting Function

The Location Reporting function supports the MME requests to the eNB to report the location information of the UE.

19.2.1.11 Warning Message Transmission function

The warning message transmission function provides means to transfer warning message via S1 interface.

19.2.1.12 Overload Function

The overload function comprises the signalling means:

- to indicate to a proportion of eNBs that the serving MME is overloaded
- to indicate to the eNBs that the serving MME is back in the "normal operation mode"

19.2.1.13 RAN Information Management Function

The RAN Information Management (RIM) function is a generic mechanism that allows the request and transfer of information (e.g. GERAN System information) between two RAN nodes via the core network.

19.2.1.14 S1 CDMA2000 Tunnelling function

The S1 CDMA2000 Tunnelling function transports CDMA2000 signalling between UE and CDMA2000 RAT over the S1 Interface for mobility from E-UTRAN to CDMA2000 HRPD and CDMA2000 1xRTT and for circuit switched fallback to CDMA2000 1xRTT.

19.2.1.15 Configuration Transfer Function

The Configuration Transfer function is a generic mechanism that allows the request and transfer of RAN configuration information (e.g. SON information) between two RAN nodes via the core network.

19.2.2 S1 Interface Signalling Procedures

Note: The following list of S1 procedures reflects the status of agreements in RAN3, might be extended in forthcoming meetings.

- E-RAB signalling procedures:
  - E-RAB Setup procedure;
  - E-RAB Modification procedure;
  - E-RAB Release procedure;
  - E-RAB Release Indication procedure.
- Handover signalling procedures;
  - Handover Preparation procedure;
  - Handover Resource Allocation procedure;
  - Handover Completion procedure;
  - Handover Cancellation procedure.
- Paging procedure;
- NAS transport procedure:
  - UL direction (Initial UE Message);
  - UL direction (Uplink NAS transport);
  - DL direction (Downlink NAS transport).
- Error Indication procedure:
  - eNB initiated error indication procedure;
  - MME initiated error indication procedure.
- Reset procedure:
  - eNB initiated Reset procedure;
  - MME initiated Reset procedure.
- Initial Context Setup procedure;
- UE Context Modification procedure;
- S1 Setup procedure;
- eNB Configuration Update procedure;
- MME Configuration Update procedure;
- Location Reporting procedures:
  - Location Reporting Control procedure;
  - Location Report procedure;
  - Location Report Failure Indication procedure.
- Overload Start procedure;
- Overload Stop procedure;
- Write Replace Warning procedure;
- Direct Information Transfer procedure;
- eNB Configuration Transfer procedure;

- MME Configuration Transfer procedure.
- S1 CDMA2000 Tunnelling procedure:
  - Downlink S1 CDMA2000 Tunnelling procedure;
  - Uplink S1 CDMA2000 Tunnelling procedure.

19.2.2.1 Paging procedure

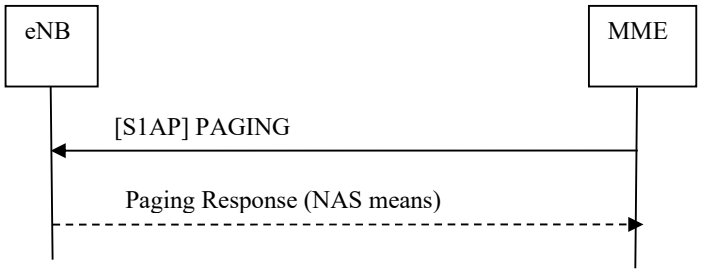

Figure 19.2.2.1-1: Paging procedure

The MME initiates the paging procedure by sending the PAGING message to each eNB with cells belonging to the tracking area(s) in which the UE is registered. Each eNB can contain cells belonging to different tracking areas, whereas each cell can only belong to one TA.

The paging response back to the MME is initiated on NAS layer and is sent by the eNB based on NAS-level routing information.

19.2.2.2 S1 UE Context Release procedure

The S1 UE Context Release procedure causes the eNB to remove all UE individual signalling resources and the related user data transport resources. This procedure is initiated by the EPC and may be triggered on request of the serving eNB.

19.2.2.2.1 S1 UE Context Release (EPC triggered)

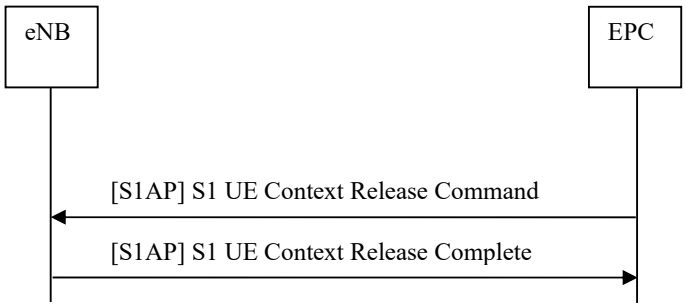

Figure 19.2.2.2.1-1: S1 UE Context Release procedure (EPC triggered)

- The EPC initiates the UE Context Release procedure by sending the S1 UE Context Release Command towards the E-UTRAN. The eNodeB releases all related signalling and user data transport resources.
- The eNB confirms the S1 UE Context Release activity with the S1 UE Context Release Complete message.
- In the course of this procedure the EPC releases all related resources as well, except context resources in the EPC for mobility management and the default EPS Bearer/E-RAB configuration.

19.2.2.2.2 S1 UE Context Release Request (eNB triggered)

The S1 UE Context Release Request procedure is initiated for E-UTRAN internal reasons and comprises the following steps:

- The eNB sends the S1 UE Context Release Request message to the EPC.
- The EPC triggers the EPC initiated UE context release procedure.

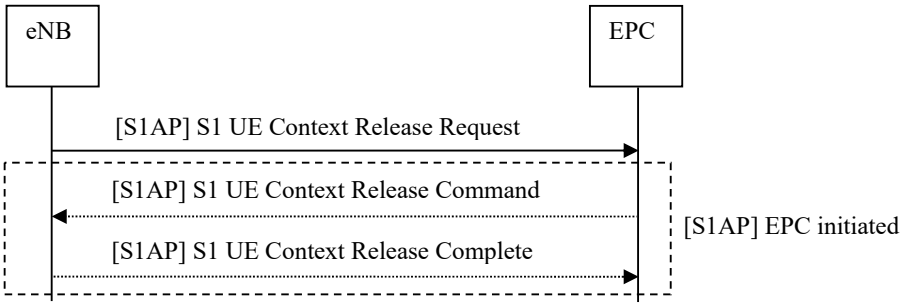

Figure 19.2.2.2.2-1: S1 UE Context Release Request procedure (eNB triggered) and subsequent S1 UE Context Release procedure (EPC triggered)

19.2.2.3 Initial Context Setup procedure

The Initial Context Setup procedure establishes the necessary overall initial UE context in the eNB in case of an Idle-to Active transition. The Initial Context Setup procedure is initiated by the MME.

The Initial Context Setup procedure comprises the following steps:

- The MME initiates the Initial Context Setup procedure by sending INITIAL CONTEXT SETUP REQUEST to the eNB. This message may include general UE Context (e.g. security context, roaming restrictions, UE capability information, UE S1 signalling connection ID, etc.), E-RAB context (Serving GW TEID, QoS information), and may be piggy-backed with the corresponding NAS message.
- Upon receipt of INITIAL CONTEXT SETUP REQUEST, the eNB setup the context of the associated UE, and perform the necessary RRC signalling towards the UE, e.g. Radio Bearer Setup procedure.
- The eNB responds with INITIAL CONTEXT SETUP COMPLETE to inform a successful operation, and with INITIAL CONTEXT SETUP FAILURE to inform an unsuccessful operation.

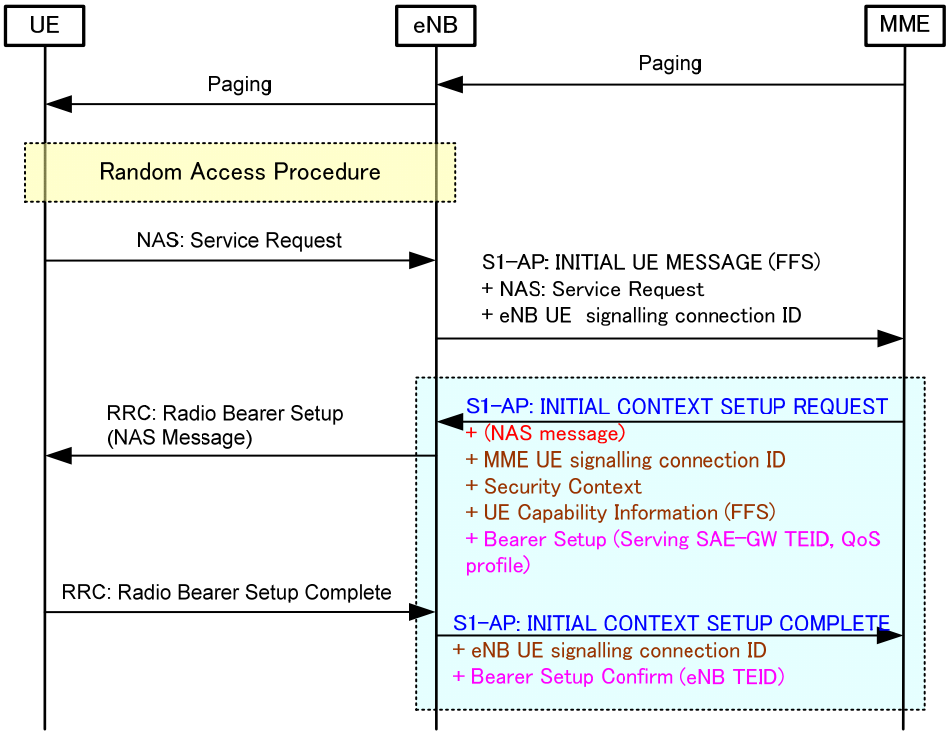

Figure 19.2.2.3-1: Initial Context Setup procedure (highlighted in blue) in Idle-to-Active procedure

19.2.2.3a UE Context Modification procedure

The UE Context Modification procedure enables the MME to modify the UE context in the eNB for UEs in active state. The UE Context Modification procedure is initiated by the MME.

The UE Context Modification procedure comprises the following steps:

- The MME initiates the UE Context Modification procedure by sending UE CONTEXT MODIFICATION REQUEST to the eNB to modify the UE context in the eNB for UEs in active state.
- The eNB responds with UE CONTEXT MODIFICATION RESPONSE to inform a successful operation, and with UE CONTEXT MODIFICATION FAILURE to inform an unsuccessful operation.

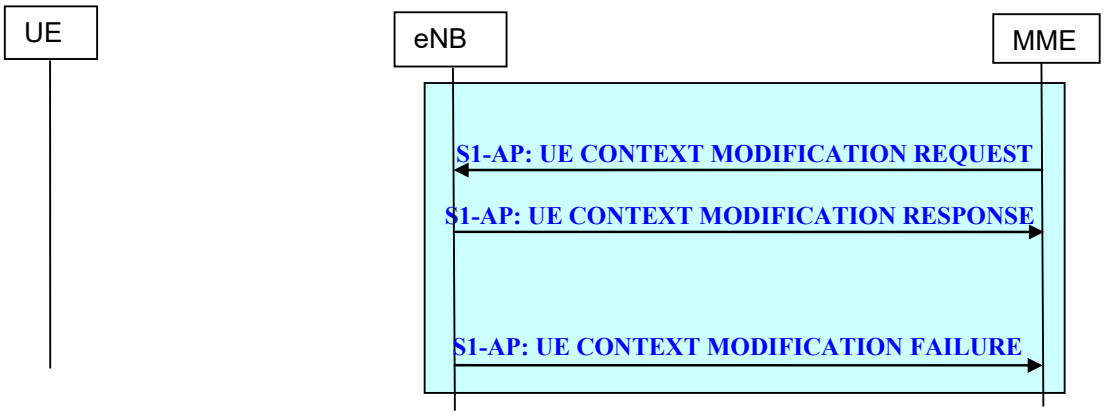

Figure 19.2.2.3a-1: UE Context Modification procedure

19.2.2.4 E-RAB signalling procedures

19.2.2.4.1 E-RAB Setup procedure

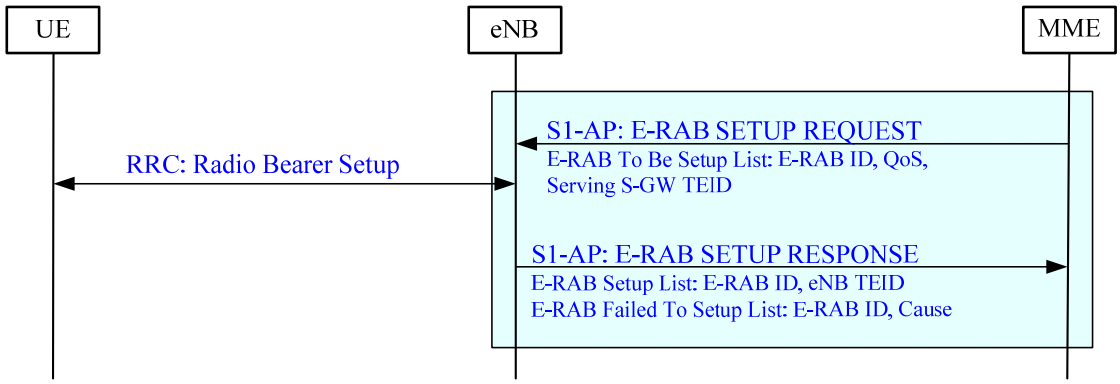

Figure 19.2.2.4.1-1: E-RAB Setup procedure

The E-RAB Setup procedure is initiated by the MME to support:

- Assignment of resources to a dedicated E-RAB.
- Assignment of resources for a default E-RAB.
- Setup of S1 Bearer (on S1) and Data Radio Bearer (on Uu).

The E-RAB Setup procedure comprises the following steps:

- The E-RAB SETUP REQUEST message is sent by the MME to the eNB to setup resources on S1 and Uu for one or several E-RAB(s). The E-RAB SETUP REQUEST message contains the Serving GW TEID and QoS indicator(s) per E-RAB within the E-RAB To Be Setup List.
- Upon receipt of the E-RAB SETUP REQUEST message the eNB establishes the Data Radio Bearer(s) (RRC: Radio Bearer Setup) and resources for S1 Bearers.
- The eNB responds with a E-RAB SETUP RESPONSE messages to inform whether the setup of resources and establishment of each E-RAB was successful or unsuccessful, with the E-RAB Setup list (E-RAB ID , eNB TEID) and the E-RAB Failed to Setup list (E-RAB ID, Cause) The eNB also creates the binding between the S1 bearer(s) (DL/UL TEID) and the Data Radio Bearer(s).

Interactions with UE Context Release Request procedure:

In case of no response from the UE the eNB shall trigger the S1 UE Context Release Request procedure.

19.2.2.4.2 E-RAB Modification procedure

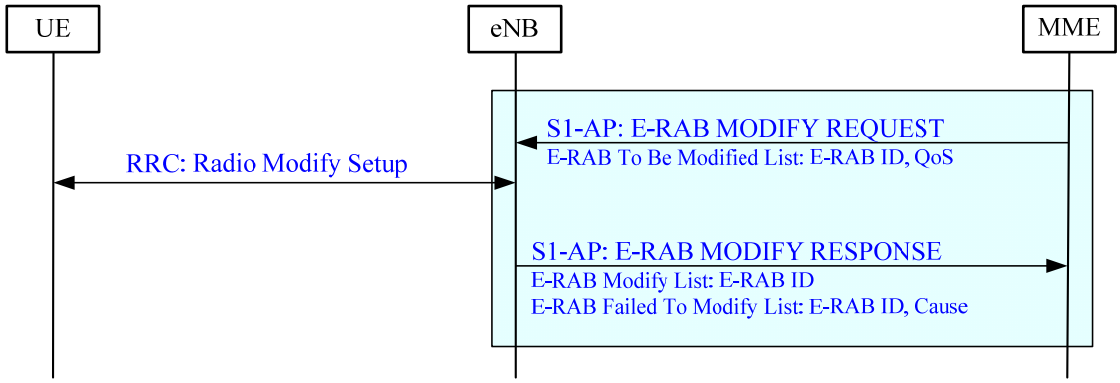

Figure 19.2.2.4.2-1: E-RAB Modification procedure

The E-RAB Modification procedure is initiated by the MME to support the modification of already established E-RAB configurations:

- Modify of S1 Bearer (on S1) and Radio Bearer (on Uu)

The EPS Bearer Modification procedure comprises the following steps:

- The E-RAB MODIFY REQUEST message is sent by the MME to the eNB to modify one or several E-RAB(s). The E-RAB MODIFY REQUEST message contains the QoS indicator(s) and Cause per E-RAB in the E-RAB To Be Modified List.
- Upon receipt of the E-RAB MODIFY REQUEST message the eNB modifies the Data Radio Bearer configuration (RRC procedure to modify the Data Radio bearer).
- The eNB responds with an E-RAB MODIFY RESPONSE message to inform whether the E-RAB modification has succeeded or not indicating with the E-RAB Modify list and E-RAB Failed to Modify list. With E-RAB ID(s) in the E-RAB Modify List or E-RAB Failed to Modify List the eNB identifies the E-RAB(s) successfully modified or failed to modify.

Interactions with UE Context Release Request procedure:

In case of no response from the UE the eNB shall trigger the S1 UE Context Release Request procedure.

19.2.2.4.3 E-RAB Release procedure

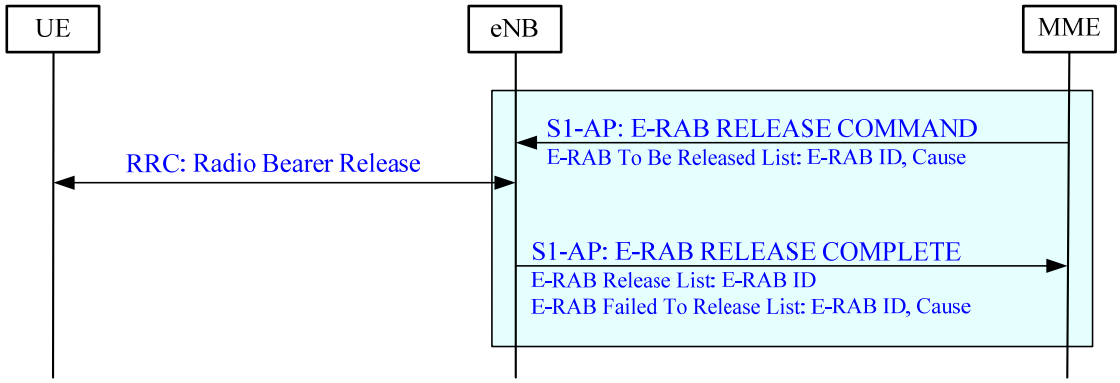

Figure 19.2.2.4.3-1: E-RAB Release procedure

The E-RAB Release procedure is initiated by the MME to release resources for the indicated E-RABs.

The E-RAB Release procedure comprises the following steps:

- The E-RAB RELEASE COMMAND message is sent by the MME to the eNB to release resources on S1 and Uu for one or several E-RAB(s). With the E-RAB ID(s) in the E-RAB To Be Released List contained in E-RAB RELEASE COMMAND message the MME identifies, the E-RAB(s) to be released.
- Upon receipt of the E-RAB RELEASE COMMAND message the eNB releases the Data Radio Bearers (RRC: Radio bearer release) and S1 Bearers.
- The eNB responds with an E-RAB RELEASE COMPLETE message containing E-RAB Release list and E-RAB Failed to Release list. With the E-RAB IDs in the E-RAB Release List/E-RAB Failed to Release List the eNB identifies the E-RAB(s) successfully released or failed to release.

Interactions with UE Context Release Request procedure:

In case of no response or negative response from the UE or in case the eNB cannot successfully perform the release of any of the requested bearers, the eNB shall trigger the S1 UE Context Release Request procedure, except if the eNB has already initiated the procedures associated with X2 Handover.

19.2.2.4.4 E-RAB Release Indication procedure

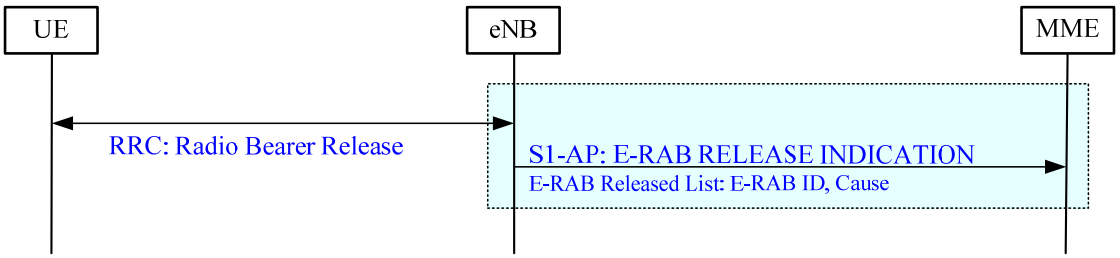

Figure 19.2.2.4.4-1: E-RAB Release Indication procedure

The E-RAB Release Indication procedure enables the E-UTRAN to send information about released resources for one or several E-RABs to the MME. The eNB initiates the procedure by sending the E-RAB RELEASE INDICATION message to the MME. The E-RAB ID(s) in the E-RAB Released List identifies the released E-RAB(s) in the eNB.

19.2.2.5 Handover signalling procedures

Handover signalling procedures support both, inter-eNB handover and inter-RAT handover.

Inter-RAT handovers shall be initiated via the S1 interface.

Inter-eNB handovers shall be initiated via the X2 interface except if any of the following conditions are true:

- there is no X2 between source and target eNB.
- the source eNB has been configured to initiate handover to the particular target eNB via S1 interface in order to enable the change of an EPC node (MME and/or Serving GW).
- the source eNB has attempted to start the inter-eNB HO via X2 but receives a negative reply from the target eNB with a specific cause value.

Inter-eNB handovers shall be initiated via the S1 interface, if one of the above conditions applies.

19.2.2.5.1 Handover Preparation procedure

The Handover preparation procedure is initiated by the source eNB if it determines the necessity to initiate the handover via the S1 interface.

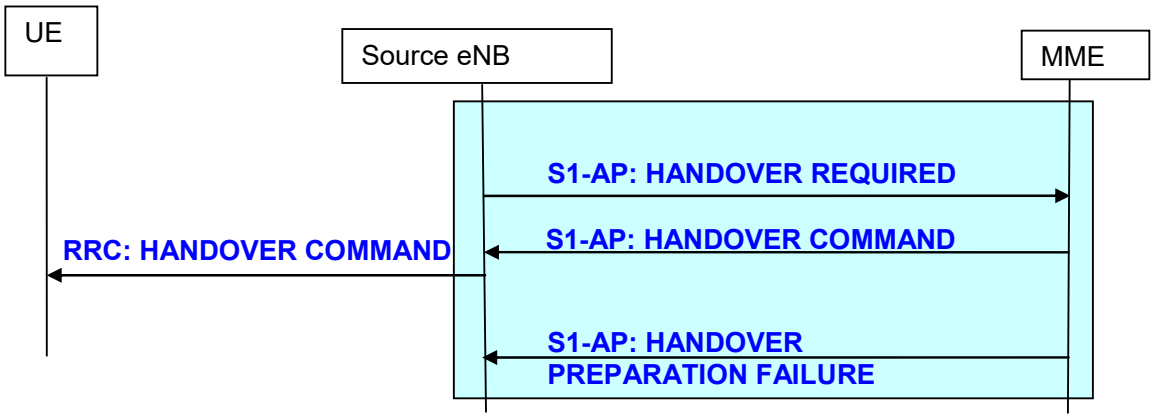

Figure 19.2.2.5.1-1: Handover preparation procedure

The handover preparation comprises the following steps:

- The HANDOVER REQUIRED message is sent to the MME.
- The handover preparation phase is finished upon the reception of the HANDOVER COMMAND message in the source eNB, which includes at least radio interface related information (HO Command for the UE), successfully established E-RAB(s) and E-RAB(s) which failed to setup.
- In case the handover resource allocation is not successful (e.g. no resources are available on the target side) the MME responds with the HANDOVER PREPARATION FAILURE message instead of the HANDOVER COMMAND message.

19.2.2.5.2 Handover Resource Allocation procedure

The handover resource allocation comprises the following steps:

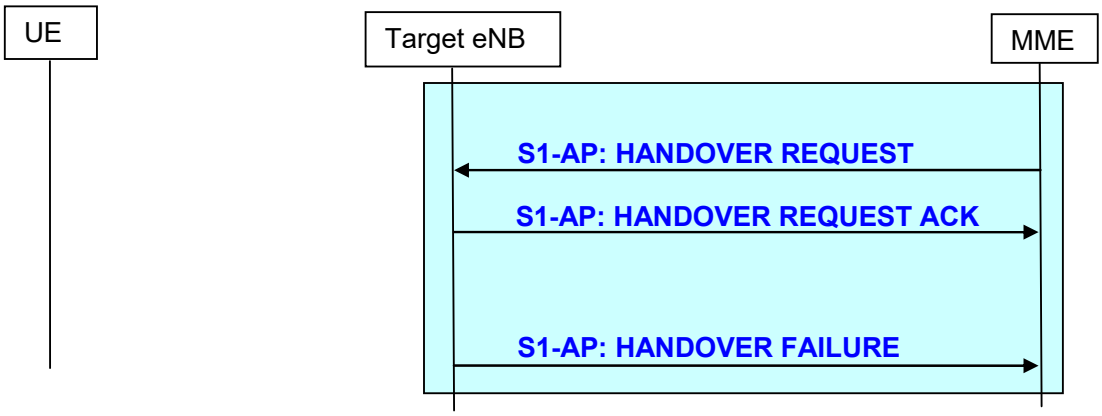

Figure 19.2.2.5.2-1: Handover resource allocation procedure

- The MME sends the HANDOVER REQUEST message including the E-RAB(s) which needs to be setup by the target eNB.
- The target eNB responds with the HANDOVER REQUEST ACK message after the required resources for all accepted E-RABs are allocated. The HANDOVER REQUEST ACK message contains successfully established E-RAB(s), E-RAB(s) which failed to setup and radio interface related information (HO Command for the UE), which is later sent transparently via the EPC/CN from the target RAT to the source RAT.

  If no resources are available on the target side, the target eNB responds with the HANDOVER FAILURE message instead of the HANDOVER REQUEST ACK message.

19.2.2.5.3 Handover Notification procedure

The Handover Completion for S1 initiated handovers comprises the following steps:

- The HANDOVER NOTIFY message is sent by the target eNB to the MME when the UE has successfully been transferred to the target cell.

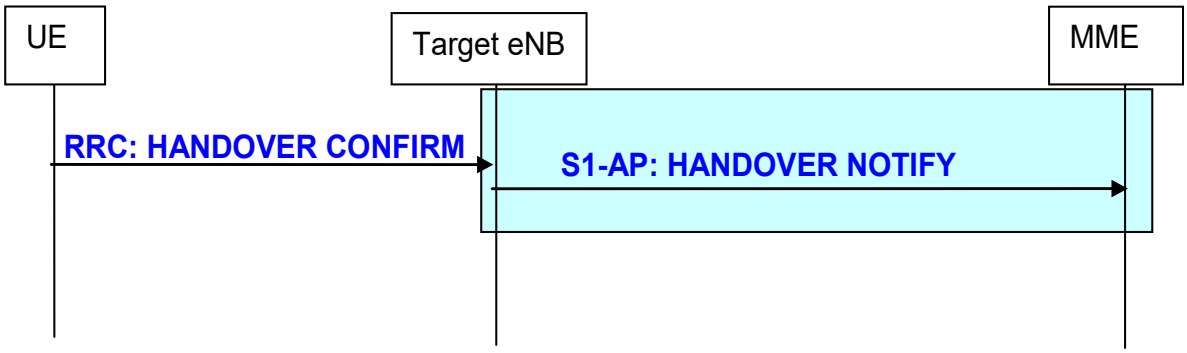

Figure 19.2.2.5.3-1: Handover completion procedure

19.2.2.5.4 Handover Cancellation

This functionality is located in the source eNB to allow a final decision regarding the outcome of the handover, i.e. either to proceed or to cancel the handover procedure.

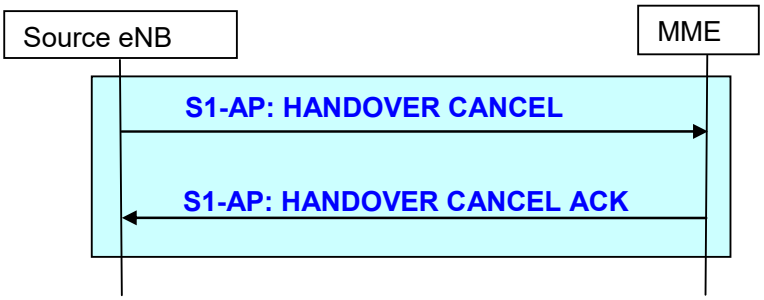

Figure 19.2.2.5.4-1: Handover cancellation procedure

- The source eNB sends a HANDOVER CANCEL message to the MME indicating the reason for the handover cancellation.
- The MME confirms the reception of the HANDOVER CANCEL message by returning the HANDOVER CANCEL ACK message.

19.2.2.5.5 Path Switch procedure

The handover completion phase for X2 initiated handovers comprises the following steps:

- The PATH SWITCH message is sent by the target eNB to the MME when the UE has successfully been transferred to the target cell. The PATH SWITCH message includes the outcome of the resource allocation: successfully established E-RAB(s).
- The MME responds with the PATH SWITCH ACK message which is sent to the eNB.
- The MME responds with the PATH SWITCH FAILURE message in case a failure occurs in the EPC.

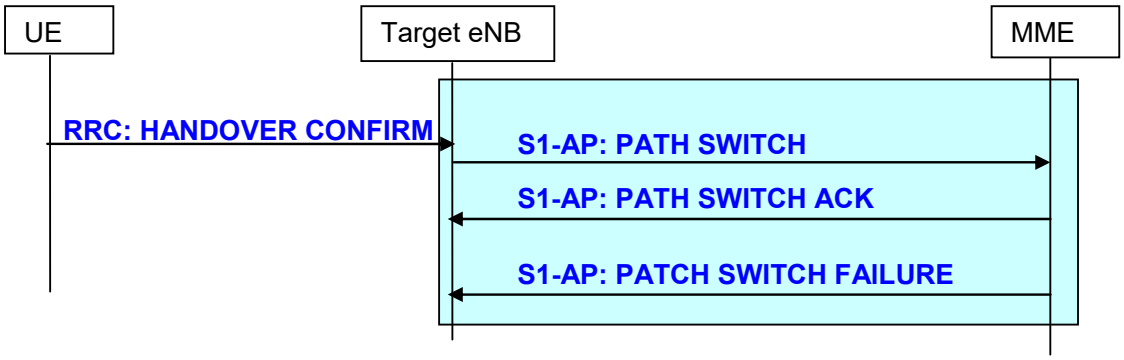

Figure 19.2.2.5.5-1: Path Switch procedure

19.2.2.5.6 Message sequence diagrams

This subclause complements TR 25.922 [27] subclause 5.1.7.2 regarding the E-UTRAN handling of containers.

Most RRC information is carried by means of containers across interfaces other than Uu. The following sequence diagrams illustrate which RRC information should be included within these containers used across the different network interfaces.

NOTE: In order to maintain independence between protocols, no requirements are included in the interface protocols that are used to transfer the RRC information.

In Rel-8 SRVCC (see TS 23.216 [28]) is supported from EUTRAN to UTRAN or GERAN A/Gb mode, but not in the other direction.

There is no support for interworking between EUTRAN and GERAN Iu-mode and between EUTRAN and GAN.

Figure 19.2.2.5.6-1 illustrates the message sequence for the PS handover from GERAN to EUTRAN procedure:

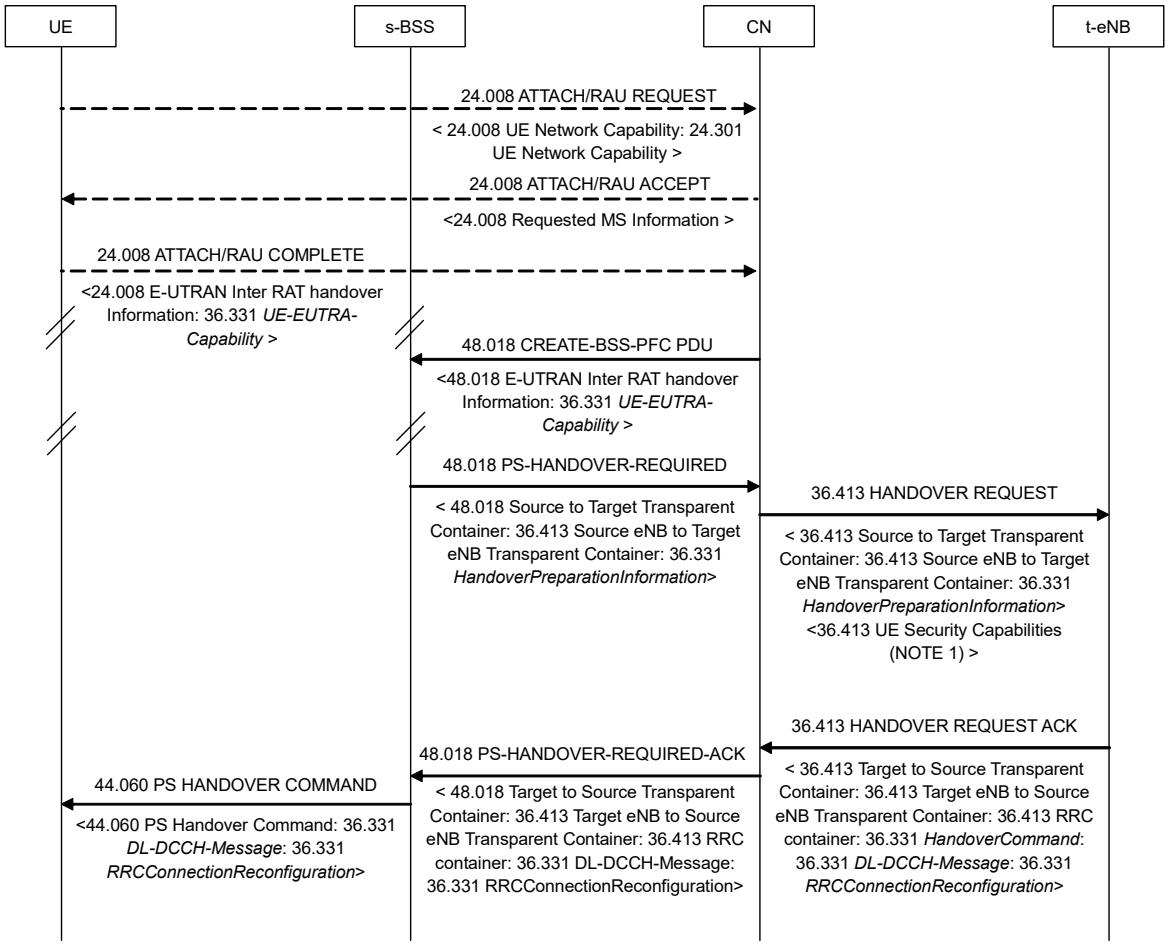

NOTE 1: The information included in this IE is derived from the information provided in the “UE Network Capability” IE during network attach / RAU

Figure 19.2.2.5.6-1. Handover of PS domain service from GERAN A/Gb mode to EUTRAN, normal flow

The first two signalling arrows indicate how capability information, which is needed by the target eNB, is provided by NAS.

Figure 19.2.2.5.6-2 illustrates the message sequence for the PS handover from UTRAN to EUTRAN procedure:

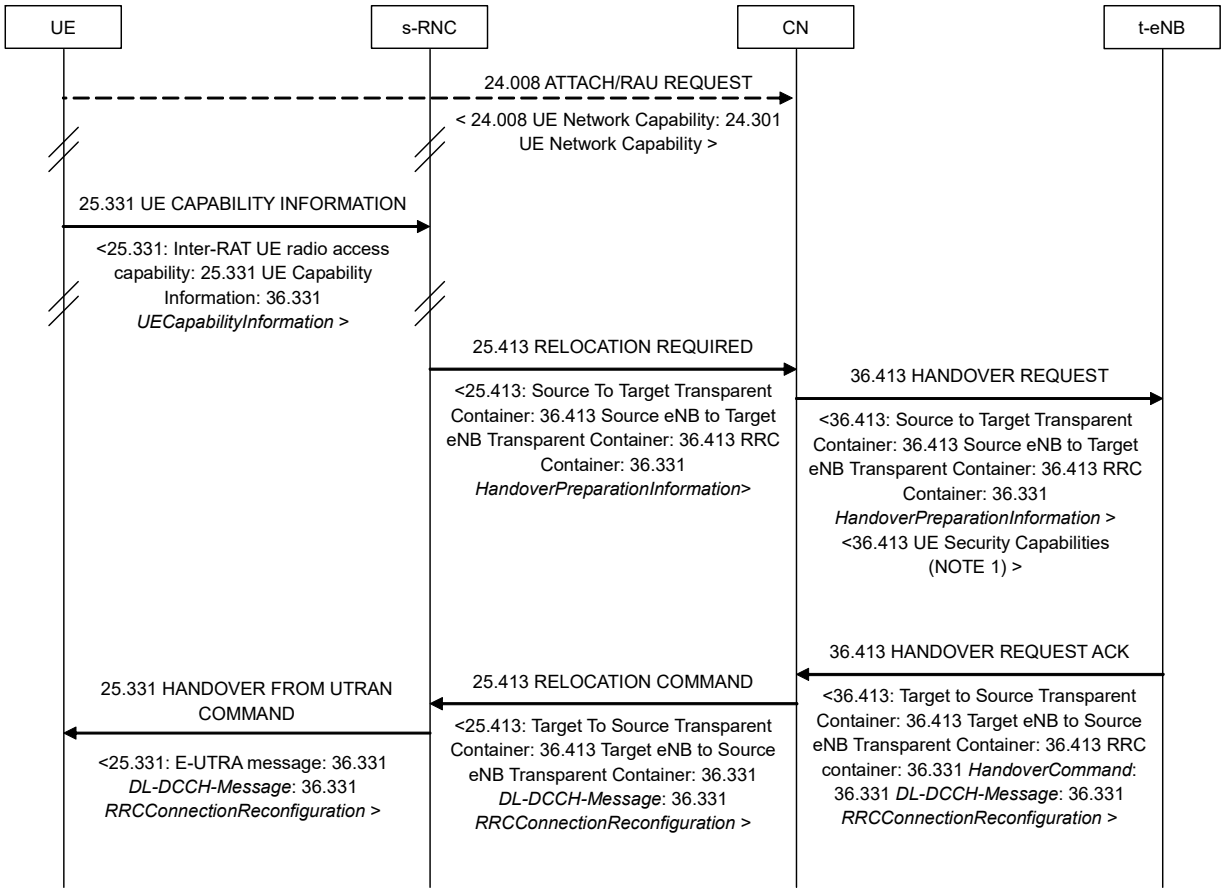

NOTE 1: The information included in this IE is derived from the information provided in the “UE Network Capability” IE during network attach / RAU

Figure 19.2.2.5.6-2: Handover of PS domain service from UTRAN to EUTRAN, normal flow

Figure 19.2.2.5.6-3 to Figure 19.2.2.5.6-5 illustrate the message sequence for the handover from EUTRAN to GERAN A/Gb mode procedure:

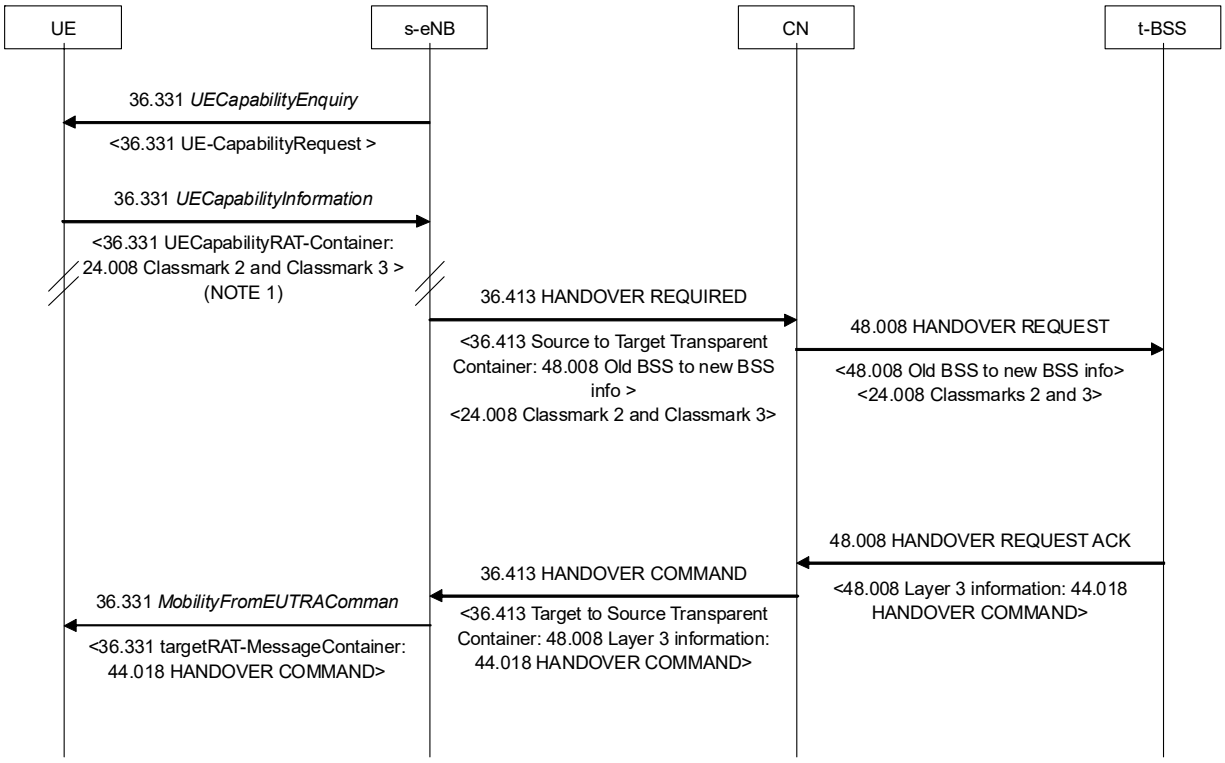

NOTE 1: the GERAN capabilities can be stored by the MME at an earlier opportunity, as shown in Figure 18-1, and transferred to the eNB at connection setup.

Figure 19.2.2.5.6-3: Handover of CS domain service from EUTRAN to GERAN A/Gb mode, normal flow

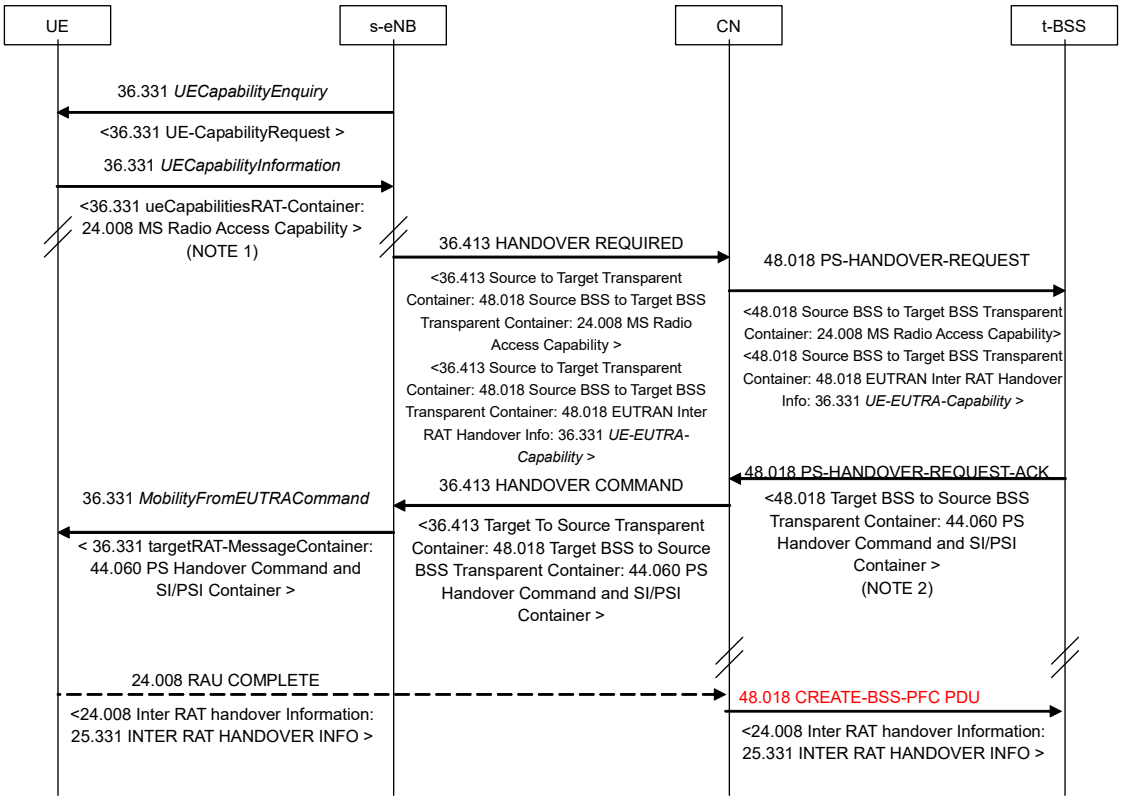

NOTE 1: the GERAN capabilities can be stored by the MME at an earlier opportunity, as shown in Figure 18-1, and transferred to the eNB at connection setup.
NOTE 2: the inclusion of GERAN SI/PSI is dependent on the PS Handover Indication in the Source BSS to Target BSS Transparent Container in the HANDOVER REQUIRED message.

Figure 19.2.2.5.6-4. Handover of PS domain service from EUTRAN to GERAN A/Gb mode, normal flow

Editor's note: TSG GERAN has not decided if inclusion of *UE-EUTRA-Capability* shall be mandated. If that will be the case, then it will be captured in 43.129.

Editor's note: TSG GERAN has not decided if CREATE-BSS-PFC or another message will be used.

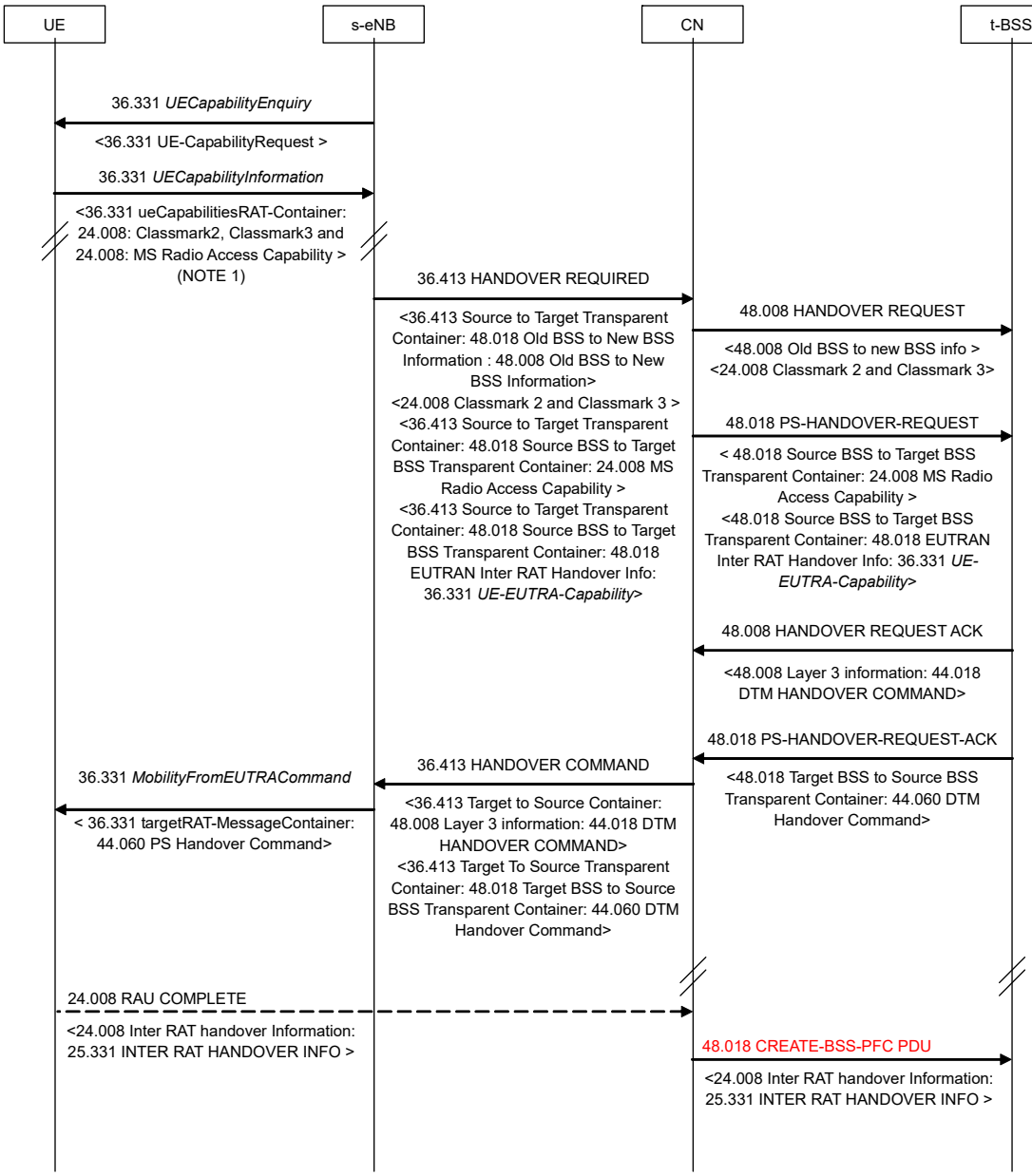

NOTE 1: the GERAN capabilities can be stored by the MME at an earlier opportunity, as shown in Figure 18-1, and transferred to the eNB at connection setup.

Figure 19.2.2.5.6-5: Handover of CS and PS domain services from EUTRAN to GERAN A/Gb mode, normal flow

Figure 19.2.2.5.6-6 and Figure 19.2.2.5.6-7 illustrate the message sequence for the handover from EUTRAN to UTRAN procedure:

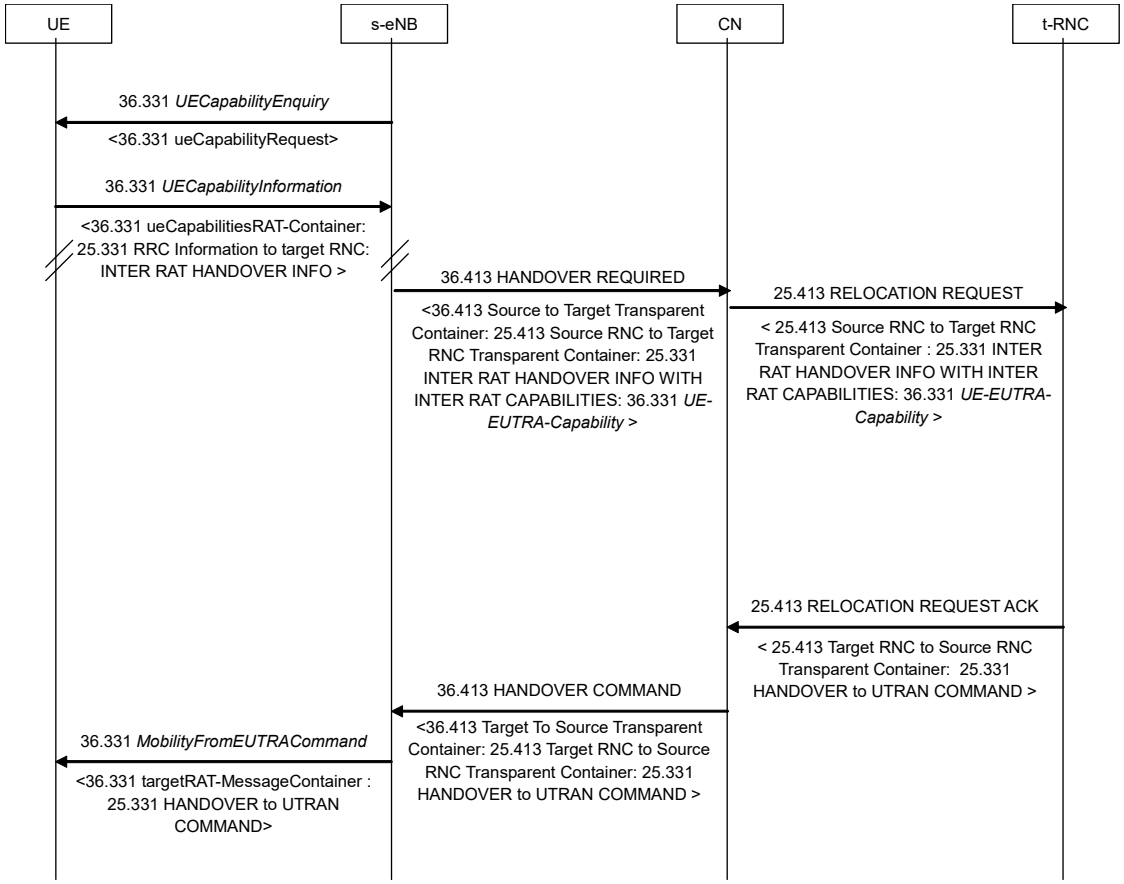

Figure 19.2.2.5.6-6. Handover of PS or CS domain service from EUTRAN to UTRAN, normal flow

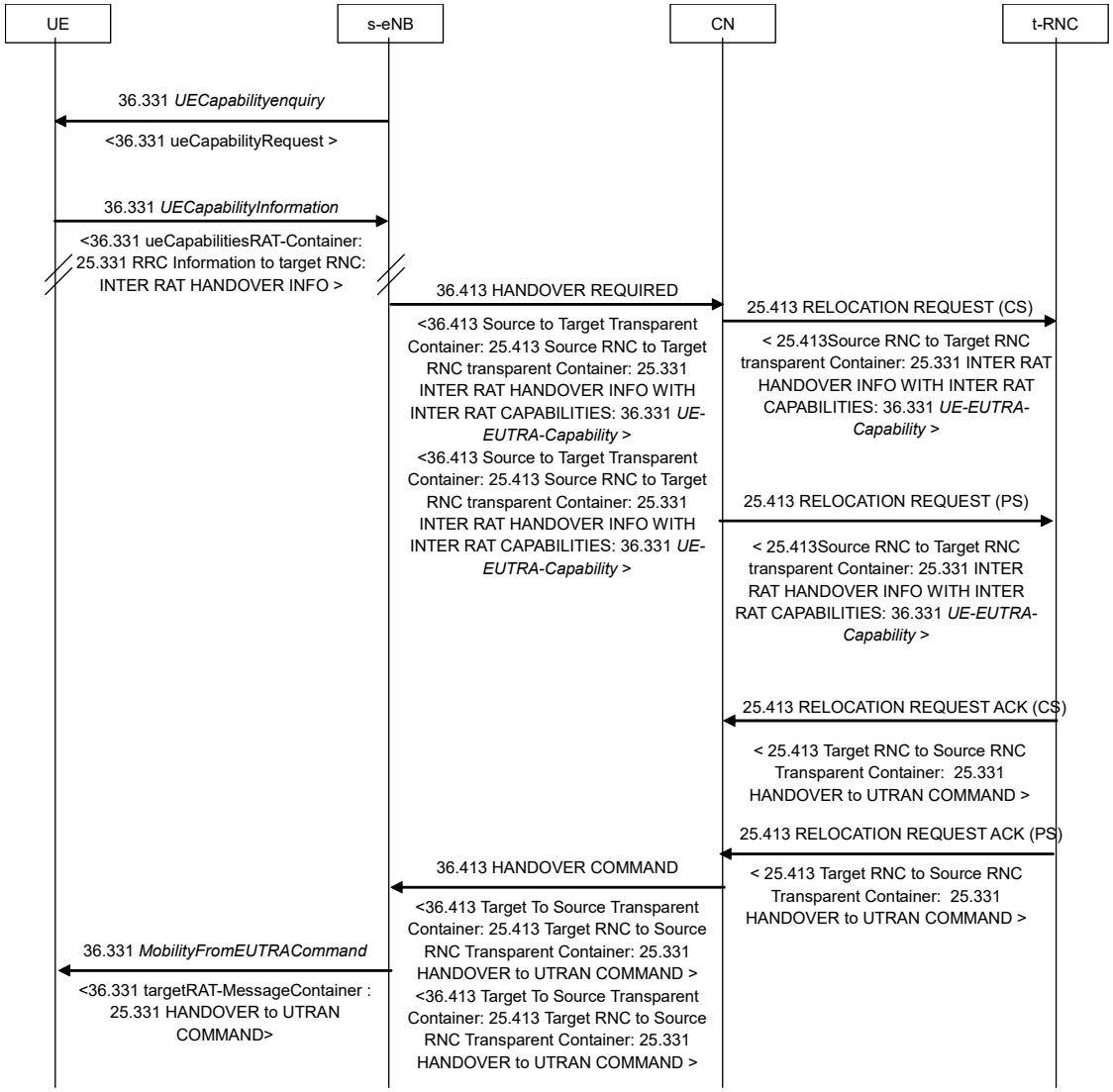

Figure 19.2.2.5.6-7. Handover of PS and CS domain service from EUTRAN to UTRAN, normal flow

19.2.2.6 NAS transport procedures

A NAS signalling message is transferred on the S1 interface in both directions. The procedures providing this functionality are

- Initial UE Message procedure (eNB initiated)
- Uplink NAS transport procedure (eNB initiated)
- Downlink NAS transport procedure (MME initiated)
- Downlink NAS non delivery indication procedure

i) Initial UE Message procedure

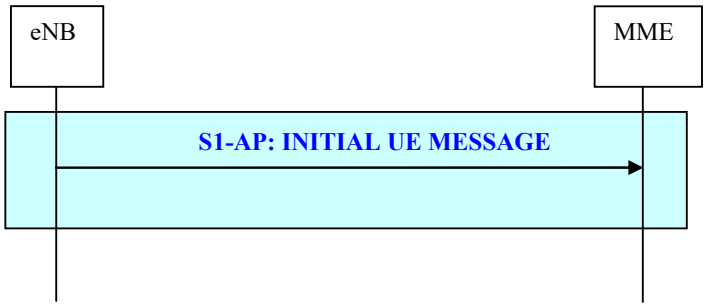

Figure 19.2.2.6-1: Initial UE Message procedure

- The INITIAL UE MESSAGE procedure is initiated by the eNB by sending the INITIAL UE MESSAGE message to the MME. The INITIAL UE MESSAGE contains a NAS message (e.g. Service Request), the UE signalling reference ID and other S1 addressing information.

ii) NAS Transport procedure (eNB initiated).

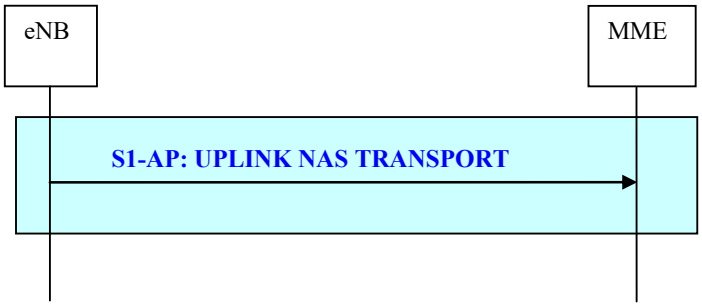

Figure 19.2.2.6-2: Uplink NAS Transport procedure

- The Uplink NAS Transport procedure is initiated by the eNB by sending the UPLINK NAS TRANSPORT message to the MME. The UPLINK NAS TRANSPORT message contains a NAS message, UE identification and other S1 related addressing information.

iii) NAS Transport procedure (MME initiated)

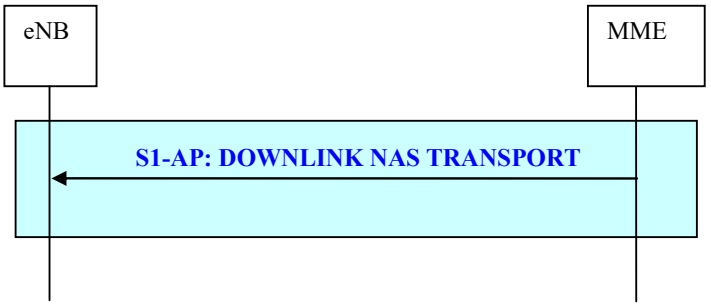

Figure 19.2.2.6-3: Downlink NAS Transport procedure

- The Downlink NAS Transport procedure is initiated by the MME by sending the DOWNLINK NAS TRANSPORT message to the eNB. The DOWNLINK NAS TRANSPORT contains a NAS message, UE identification and other S1 related addressing information.

iv) Downlink NAS non delivery procedure

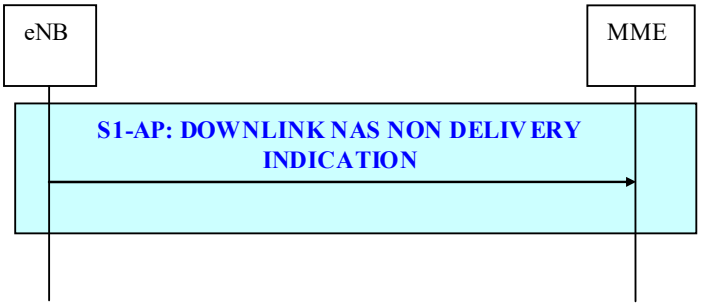

Figure 19.2.2.6-4: Downlink NAS Non Delivery Indication procedure

- When the eNB decides to not start the delivery of a NAS message that has been received from MME, it shall report the non-delivery of this NAS message by sending a DOWNLINK NAS NON DELIVERY INDICATION message to the MME including the non-delivered NAS message and an appropriate cause value.

19.2.2.7 S1 interface Management procedures

19.2.2.7.1 Reset procedure

The purpose of the Reset procedure is to initialize the peer entity after node setup and after a failure event occurred. This procedure is initiated by both the eNB and MME.

19.2.2.7.1a eNB initiated Reset procedure

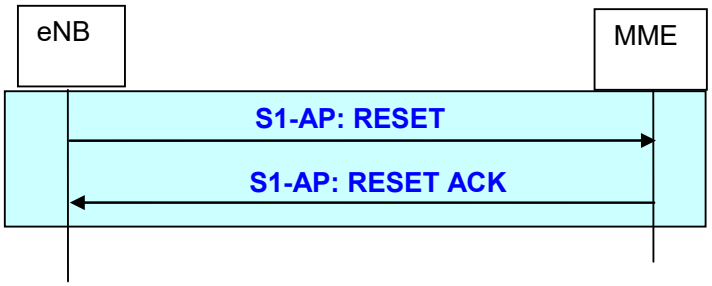

Figure 19.2.2.7.1a-1: eNB initiated Reset procedure

- The eNB triggers the RESET message to indicate that an initialisation in the MME is required. The MME releases the corresponding references and resources.
- Afterwards the MME sends the RESET ACK message to confirm that the resources and references are cleared.

19.2.2.7.1b MME initiated Reset procedure

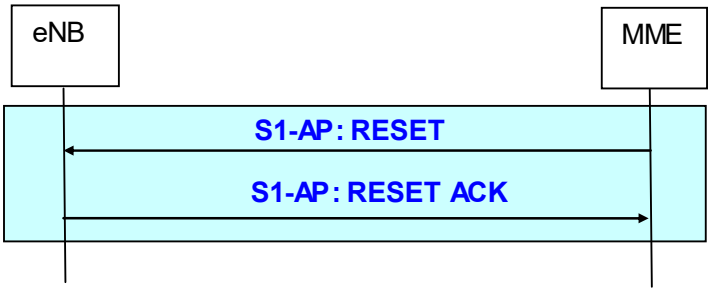

Figure 19.2.2.7.1b-1: MME initiated Reset procedure

- The MME triggers the RESET message to indicate that an initialisation in the eNB is required. The eNB releases the corresponding references and resources.
- Afterwards the eNB sends the RESET ACK message to confirm that the resources and references are cleared.

19.2.2.7.2 Error Indication functions and procedures

The Error Indication procedure is initiated by the eNB and the MME, to report detected errors in one incoming message, if an appropriate failure message cannot be reported to the sending entity.

19.2.2.7.2a eNB initiated error indication

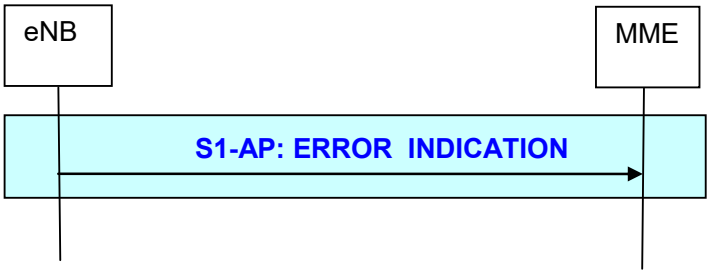

Figure 19.2.2.7.2a-1: eNB initiated Error Indication procedure

- The eNB sends the ERROR INDICATION message to report the peer entity which kind of error occurs.

19.2.2.7.2b MME initiated error indication

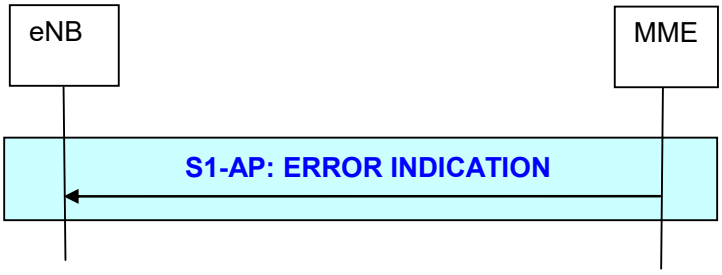

Figure 19.2.2.7.2b-1: MME initiated Error Indication procedure

- The MME sends the ERROR INDICATION message to report the peer entity which kind of error occurs.

19.2.2.8 S1 Setup procedure

The S1 Setup procedure is used to exchange configured data which is required in the MME and in the eNB respectively to ensure a proper interoperation. The S1 Setup procedure is triggered by the eNB. The S1 Setup procedure is the first S1AP procedure which will be executed.

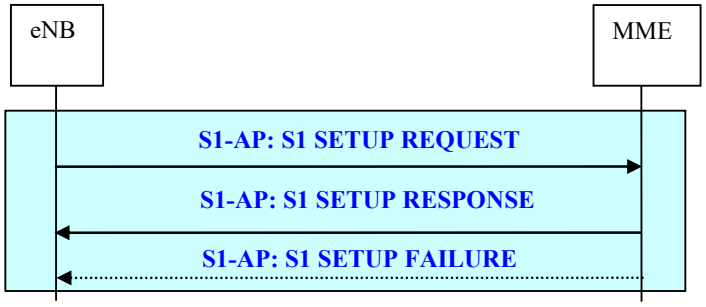

Figure 19.2.2.8-1: S1 Setup procedure

- The eNB initiates the S1 Setup procedure by sending the S1 SETUP REQUEST message including supported TAs and broadcasted PLMNs to the MME.
- In the successful case the MME responds with the S1 SETUP RESPONSE message which includes served PLMNs as well as a relative MME capacity indicator to achieve load balanced MMEs in the pool area.
- If the MME cannot accept the S1 Setup Request the MME responds with the S1 SETUP FAILURE message indicating the reason of the denial. The MME optionally indicates in the S1 SETUP FAILURE message when the eNB is allowed to re-initiate the S1 Setup Request procedure towards the same MME again.

19.2.2.9 eNB Configuration Update procedure

The eNB Configuration Update procedure is used to provide updated configured data in eNB. The eNB Configuration Update procedure is triggered by the eNB.

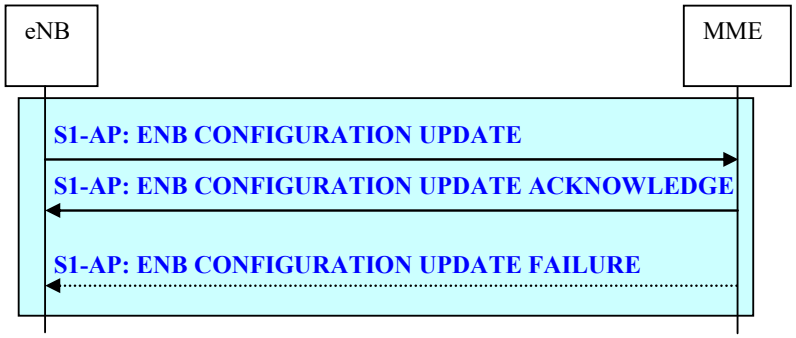

Figure 19.2.2.9-1: eNB Configuration Update procedure

- The eNB initiates the eNB Configuration Update procedure by sending the ENB CONFIGURATION UPDATE message including updated configured data like supported TAs and broadcasted PLMNs to the MME. In case one or more supported TA(s) needs to be updated, the eNB shall provide the whole list of TA(s), including those which has not been changed, in the ENB CONFIGURATION UPDATE message.
- The MME responds with the ENB CONFIGURATION UPDATE ACKNOWLEDGE message to acknowledge that the provided configuration data are successfully updated.
- The MME shall overwrite and store the received configuration data which are included in the ENB CONFIGURATION UPDATE message. Configuration data which has not been included in the ENB

CONFIGURATION UPDATE message are interpreted by the MME as still valid. For the provided TA(s) the MME shall overwrite the whole list of supported TA(s).

- In case the MME cannot accept the received configuration updates the MME shall respond with the ENB CONFIGURATION UPDATE FAILURE message including an appropriate cause value to indicate the reason of the denial. The MME optionally indicates in the ENB CONFIGURATION UPDATE FAILURE message when the eNB is allowed to re-initiate the eNB Configuration Update procedure towards the same MME again. For the unsuccessful update case the eNB and the MME shall continue with the existing configuration data.

19.2.2.9a eNB Configuration Transfer procedure

The eNB Configuration Transfer procedure is initiated by the eNB to request and/or transfer RAN configuration information via the core network.

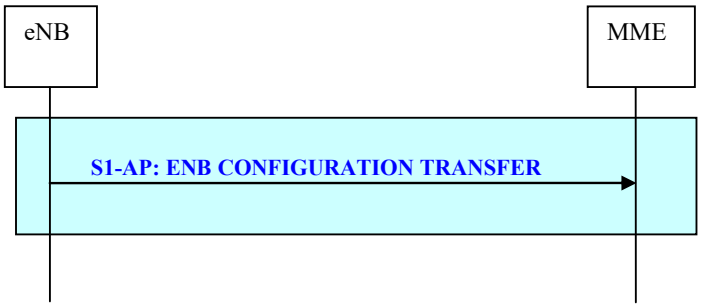

Figure 19.2.2.9a-1: eNB Configuration Transfer procedure

- The eNB Configuration Transfer procedure is initiated by the eNB by sending the eNB CONFIGURATION TRANSFER message to the MME. The eNB CONFIGURATION TRANSFER message contains RAN configuration information (e.g. SON information) and other relevant information such as the routing address which identifies the final RAN destination node.

19.2.2.10 MME Configuration Update procedure

The MME Configuration Update procedure is used to provide updated configured data and changes of the relative MME capacity values in the MME. The MME Configuration Update procedure is triggered by the MME.

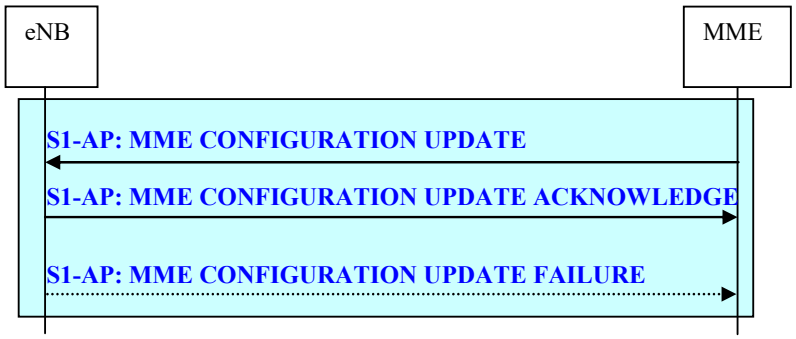

Figure 19.2.2.10-1: MME Configuration Update procedure

- The MME initiates the MME Configuration Update procedure by sending the MME CONFIGURATION UPDATE message including updated configured data like served PLMNs and changes of the relative MME capacity values to the eNB.

- The eNB responds with the MME CONFIGURATION UPDATE ACKNOWLEDGE message to acknowledge that the provided configuration data and the relative MME capacity values are successfully updated.
- The eNB shall overwrite and store the received configuration data and relative MME capacity values which are included in the MME CONFIGURATION UPDATE message. Configuration data which has not been included in the MME CONFIGURATION UPDATE message are interpreted by the eNB as still valid.
- In case the eNB cannot accept the received configuration updates the eNB shall respond with the MME CONFIGURATION UPDATE FAILURE message including an appropriate cause value to indicate the reason of the denial. The eNB optionally indicates in the MME CONFIGURATION UPDATE FAILURE message when the MME is allowed to re-initiate the MME Configuration Update procedure towards the same eNB again. For the unsuccessful update case the eNB and the MME shall continue with the existing configuration data and relative MME capacity values.

19.2.2.10a MME Configuration Transfer procedure

The MME Configuration Transfer procedure is initiated by the MME to request and/or transfer RAN configuration information to the eNB.

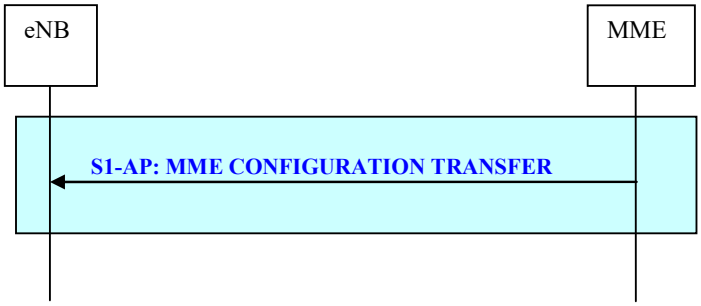

Figure 19.2.2.10a-1: MME Configuration Transfer procedure

- The MME Configuration Transfer procedure is initiated by the MME by sending the MME CONFIGURATION TRANSFER message to the eNB. The MME CONFIGURATION TRANSFER message contains RAN configuration information (e.g. SON information) and other relevant information.

19.2.2.11 Location Reporting procedures

The Location Reporting procedures provide the means to report the current location of a specific UE.

The procedures providing this function are:

- Location Reporting Control procedure
- Location Report procedure
- Location Report Failure Indication procedure

19.2.2.11.1 Location Reporting Control procedure

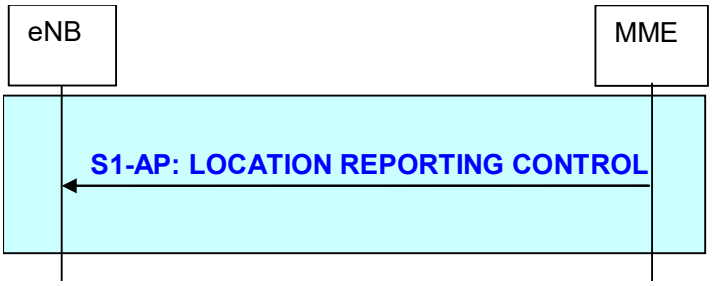

Figure 19.2.2.11.1-1: Location Reporting Control procedure

The Location Reporting Control procedure is initiated by the MME sending the LOCATION REPORTING CONTROL to the eNB to request the current location information, e.g. Cell ID, of a specific UE, and how the information shall be reported, e.g. direct report, report every cell change. The Location Reporting Control procedure is also used to terminate reporting on cell change.

If the Location Reporting Control procedure fails, e.g. due to an iteraction with an initiated hand over then the eNB shall indicate the failure using the Location Report Failure Indication procedure.

If the Location Reporting Control procedure is on going for a specific UE and the eNB received an UE CONTEXT RELEASE COMMAND message from MME this specific UE then the eNB shall terminate the on-going Location Reporting.

19.2.2.11.2 Location Report procedure

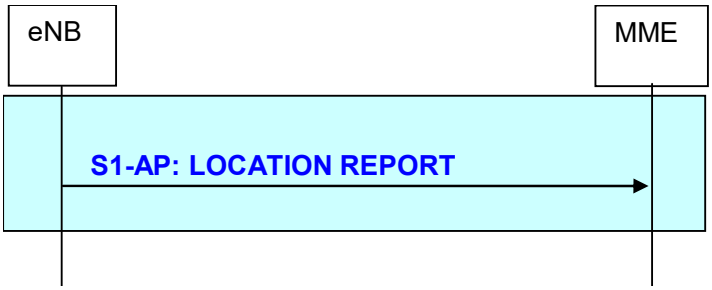

Figure 19.2.2.11.2-1: Location Report procedure

The Location Report procedure is initiated by the eNB by sending the LOCATION REPORT to the MME to report the current location information of a specific UE as a standalone report, or every time UE changes cell.

19.2.2.11.3 Location Report Failure Indication procedure

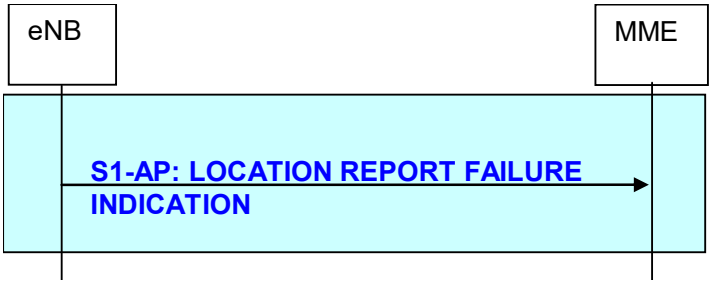

Figure 19.2.2.11.3-1: Location Report Failure Indication procedure

The Location Report Failure Indication procedure is initiated by the eNB by sending the LOCATION REPORT FAILURE INDICATION to the MME to indicate that the Location Report Control procedure has failed due to e.g. UE has performed inter-eNB handover.

19.2.2.12 Overload procedure

19.2.2.12.1 Overload Start procedure

The Overload Start procedure is used by the MME to indicate to a proportion of eNBs to which the MME has an S1 interface connection that the MME is overloaded. The Overload Start procedure is used to provide an indication which signalling traffic needs to be rejected/permitted only.

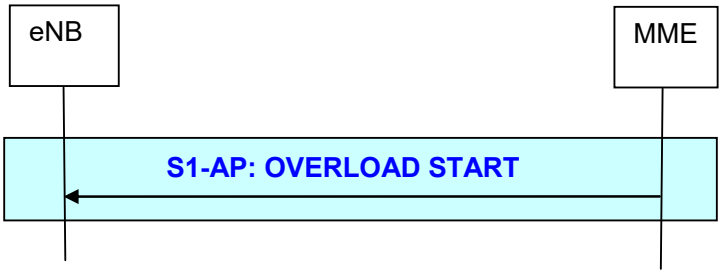

Figure 19.2.2.12.1-1 Overload Start procedure

19.2.2.12.2 Overload Stop procedure

The Overload Stop procedure is used by the MME to indicate the concerned eNB(s) that the MME is no longer overloaded.

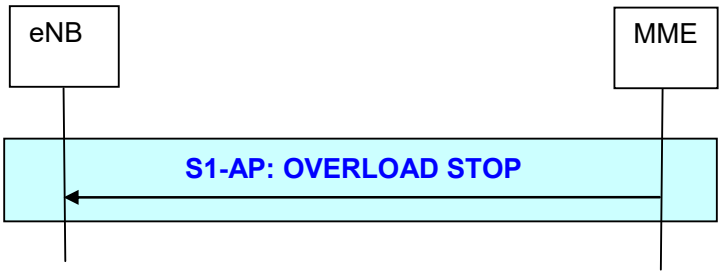

Figure 19.2.2.12.2-1: Overload Stop procedure

19.2.2.13 Write-Replace Warning procedure

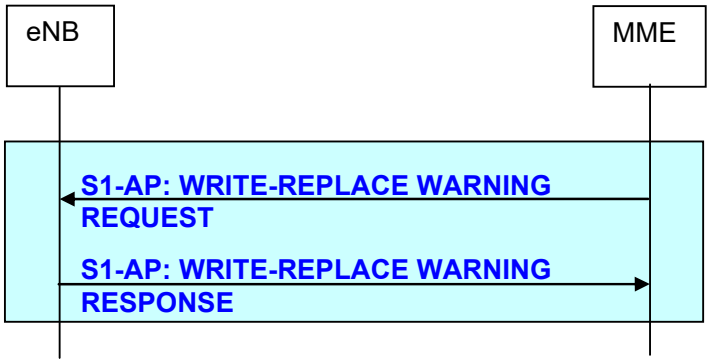

Figure 19.2.2.13.1-1: Write-Replace Warning procedure

The Write-Replace Warning procedure is used to start the broadcasting and to overwrite the ongoing broadcasting of a warning message.

ETWS is an example of warning system using this procedure.

This procedure is initiated by the MME by sending WRITE-REPLACE WARNING REQUEST message containing at least the Message Identifier, Emergency Area list, information on how the broadcast should be performed, and the contents of the warning message to be broadcast.

The eNB responds with WRITE-REPLACE WARNING RESPONSE message to acknowledge that the requested ETWS message broadcast was initiated.

19.2.2.14 eNB Direct Information Transfer procedure

The eNB Direct Information Transfer procedure is initiated by the eNB to request and transfer information to the core network.

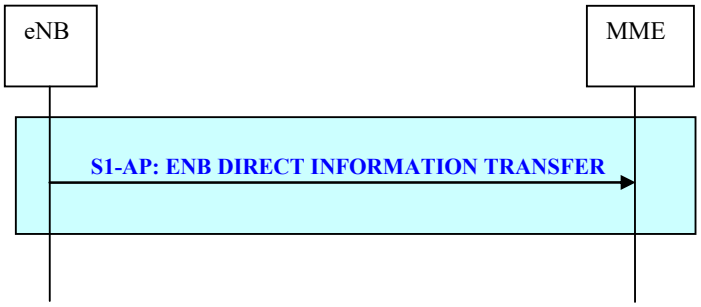

Figure 19.2.2.14-1: eNB Direct Information Transfer procedure

- The eNB Direct Information Transfer procedure is initiated by the eNB by sending the eNB DIRECT INFORMATION TRANSFER message to the MME. The eNB DIRECT INFORMATION TRANSFER message contains RIM information and RIM routing address which identifies the final RAN destination node.

19.2.2.15 MME Direct Information Transfer procedure

The MME Direct Information Transfer procedure is initiated by the MME to request and transfer information to the core network.

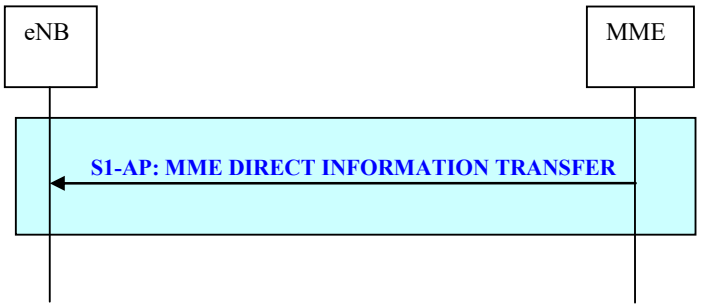

Figure 19.2.2.15-1: MME Direct Information Transfer procedure

- The MME Direct Information Transfer procedure is initiated by the MME by sending the MME DIRECT INFORMATION TRANSFER message to the eNB. The MME DIRECT INFORMATION TRANSFER message contains RIM information.

19.2.2.16 S1 CDMA2000 Tunnelling procedures

The S1 CDMA2000 Tunnelling procedures carry CDMA2000 signalling messages between UE and CDMA2000 RAT over the S1 Interface. This includes signalling for pre-registration and handover preparation for optimized mobility

from E-UTRAN to CDMA2000 HRPD, signalling for handover preparation for mobility from E-UTRAN to CDMA2000 1xRTT and signalling to support CS fallback to CDMA2000 1xRTT for mobile originated and mobile terminated CS domain services. The CDMA2000 messages are tunnelled transparently to the eNB and MME, however, additional information may be sent along with the tunnelled CDMA2000 message to assist the eNodeB and MME in the Tunnelling procedure. The procedures providing this functionality are:

- Downlink S1 CDMA2000 Tunnelling procedure;
- Uplink S1 CDMA2000 Tunnelling procedure.

19.2.2.16.1 Downlink S1 CDMA2000 Tunnelling procedure

The MME sends the DOWNLINK S1 CDMA2000 TUNNELLING message to the eNB to forward a CDMA2000 message towards an UE for which a logical S1 connection exists (see Figure 19.2.2.16.1-1 below).

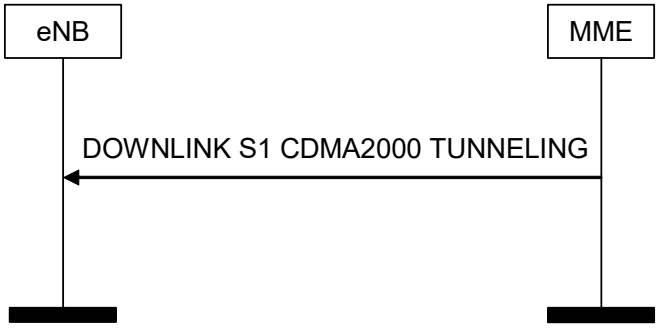

Figure 19.2.2.16.1-1: Downlink S1 CDMA2000 Tunnelling procedure

19.2.2.16.2 Uplink S1 CDMA2000 Tunnelling procedure

The eNB sends the UPLINK S1 CDMA2000 TUNNELLING message to the MME to forward a CDMA2000 message towards the CDMA2000 RAT (HRPD or 1xRTT) as depicted on Figure 19.2.2.16.2-1 below.

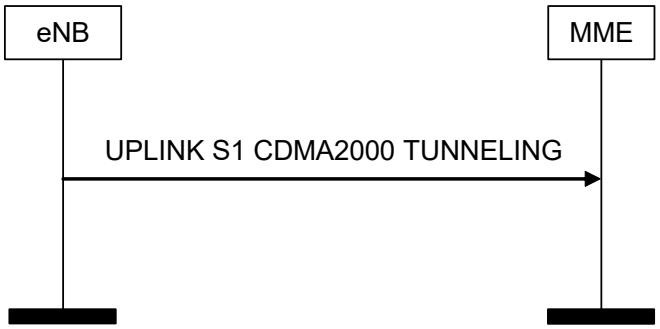

Figure 19.2.2.16.2-1: Uplink S1 CDMA2000 Tunnelling procedure

20 X2 Interface

20.1 User Plane

The X2 user plane interface (X2-U) is defined between eNBs. The X2-U interface provides non guaranteed delivery of user plane PDUs. The user plane protocol stack on the X2 interface is shown in Figure 20.1-1. The transport network layer is built on IP transport and GTP-U is used on top of UDP/IP to carry the user plane PDUs.

The X2-UP interface protocol stack is identical to the S1-UP protocol stack.

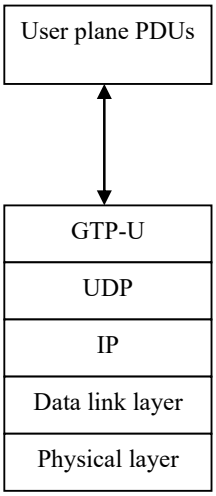

Figure 20.1-1: X2 Interface User Plane (eNB-eNB)

20.2 Control Plane

The X2 control plane interface (X2-CP) is defined between two neighbour eNBs. The control plane protocol stack of the X2 interface is shown on Figure 20.2-1 below. The transport network layer is built on SCTP on top of IP. The application layer signalling protocol is referred to as X2-AP (X2 Application Protocol).

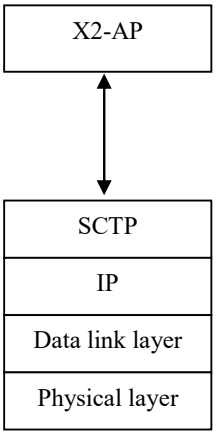

Figure 20.2-1: X2 Interface Control Plane

A single SCTP association per X2-C interface instance shall be used with one pair of stream identifiers for X2-C common procedures. Only a few pairs of stream identifiers should be used for X2-C dedicated procedures.

Source-eNB communication context identifiers that are assigned by the source-eNB for X2-C dedicated procedures, and target-eNB communication context identifiers that are assigned by the target-eNB for X2-C dedicated procedures, shall be used to distinguish UE specific X2-C signalling transport bearers. The communication context identifiers are conveyed in the respective X2AP messages.

20.2.1 X2-CP Functions

The X2AP protocol supports the following functions:

- Intra LTE-Access-System Mobility Support for UE in ECM-CONNECTED:

  - Context transfer from source eNB to target eNB;
  - Control of user plane tunnels between source eNB and target eNB;
  - Handover cancellation.
- Load Management;
- General X2 management and error handling functions:
  - Error indication;
  - Setting up the X2;
  - Resetting the X2;
  - Updating the X2 configuration data.

20.2.2 X2-CP Procedures

The elementary procedures supported by the X2AP protocol are listed in Table 20.2.2-1 below:

Table 20.2.2-1: X2-CP Procedures

Elementary Procedure	Initiating Message	Response Message of Successful Outcome	Response Message of Unsuccessful Outcome	Description & comments
Handover Preparation	HANDOVER REQUEST	HANDOVER REQUEST ACKNOWLEDGE	HANDOVER PREPARATION FAILURE	Used by source eNB to request a handover to the target eNB
Handover Cancellation	HANDOVER CANCEL			Used by the source eNB to cancel a previously requested handover in a target eNB
UE Context Release	UE CONTEXT RELEASE	-	-	Used by the target eNB to signal to source eNB that control plane resources for the handed over UE context can be released.
SN Status Transfer	SN STATUS TRANSFER	-	-	Used to manage forwarding of user plane data.
Error Indication	ERROR INDICATION	-	-	Used by the eNB to report errors in a received message provided they cannot be reported by an appropriate response message.
Load Indication	LOAD INFORMATION	-	-	Used by the eNB to report interference coordination information to its neighbour eNBs.
X2 Setup	X2 SETUP REQUEST	X2 SETUP RESPONSE	X2 SETUP FAILURE	Used to exchange necessary configuration data for the eNB to setup the X2 interface.
eNB Configuration Update	ENB CONFIGURATION UPDATE	ENB CONFIGURATION UPDATE ACKNOWLEDGE	ENB CONFIGURATION UPDATE FAILURE	Used to update necessary data concerning the configuration of the X2 interface.
Reset	RESET REQUEST	RESET RESPONSE	-	Used to completely reset the X2 interface.

20.2.2.1 Handover Preparation procedure

The Handover preparation procedure is initiated by the source eNB if it determines the necessity to initiate the handover via the X2 interface.

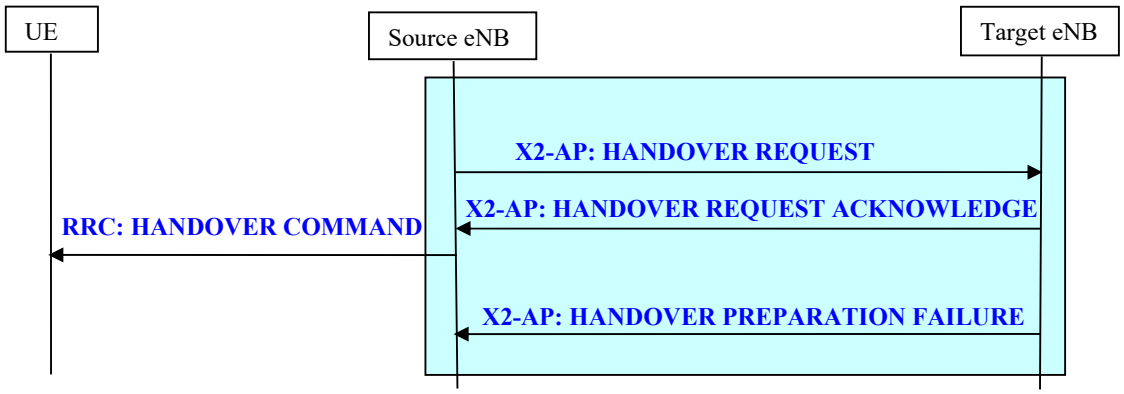

Figure 20.2.2.1-1: Handover Preparation procedure

The source eNB sends a HANDOVER REQUEST to the target eNB including the bearers to be setup by the target ENB.

The handover preparation phase is finished upon the reception of the HANDOVER REQUEST ACKNOWLEDGE message in the source eNB, which includes at least radio interface related information (HO Command for the UE), successfully established E-RAB(s) and failed established E-RAB(s).

In case the handover resource allocation is not successful (e.g. no resources are available on the target side) the target eNB responds with the HANDOVER PREPARATION FAILURE message instead of the HANDOVER REQUEST ACKNOWLEDGE message.

If eNB received NAS message from MME during X2 handover procedure, it shall be acted as specified in subclause 19.2.2.6.

20.2.2.2 Handover Cancel procedure

This functionality is located in the source eNB to allow cancellation of the handover procedure.

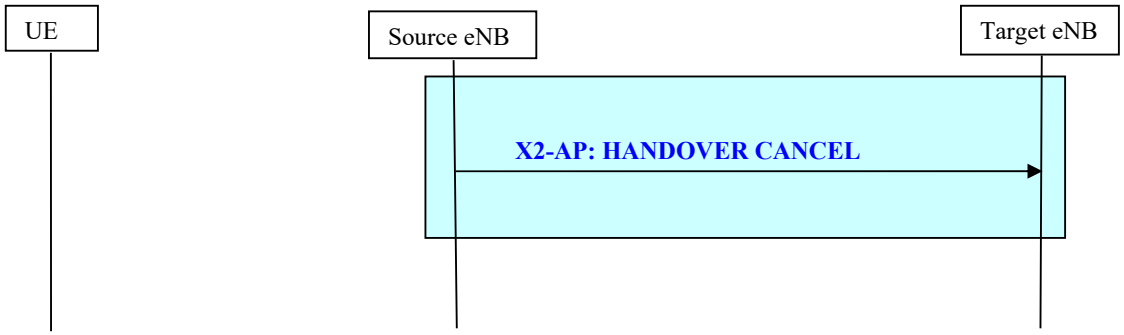

Figure 20.2.2.2-1: Handover Cancel procedure

The source eNB sends a HANDOVER CANCEL message to the target eNB indicating the reason for the handover cancellation.

20.2.2.3 UE Context Release procedure

The UE Context Release procedure is initiated by the target eNB to signal to the source eNB that resources for the handed over UE context can be released.

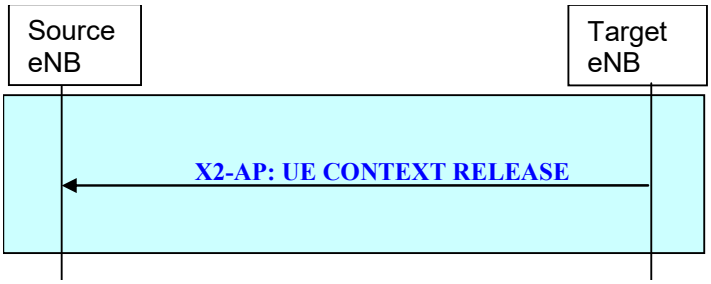

Figure 20.2.2.3-1: UE Context Release procedure

By sending UE CONTEXT RELEASE the target eNB informs the source eNB of Handover success and triggers the release of resources.

20.2.2.4 SN Status Transfer procedure

The purpose of the SN Status Transfer procedure is to transfer the uplink PDCP SN and HFN receiver status and the downlink PDCP SN and HFN transmitter status from the source to the target eNB during an X2 handover for each respective E-RAB for which PDCP SN and HFN status preservation applies.

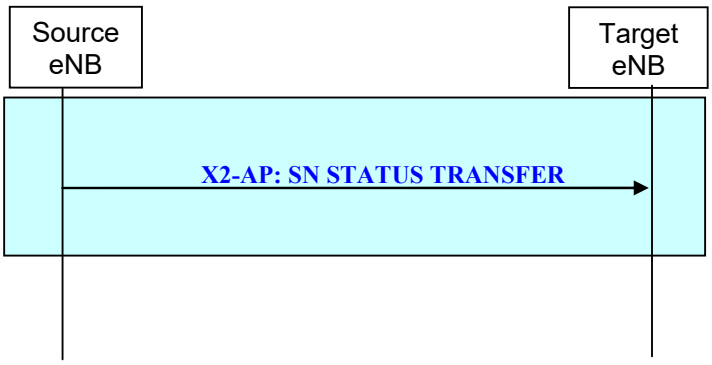

Figure 20.2.2.4-1: SN Status Transfer procedure

20.2.2.5 Error Indication procedure

The Error Indication procedure is initiated by an eNB to signal to a peer eNB an error situation in a received message, provided it cannot be reported by an appropriate failure message.

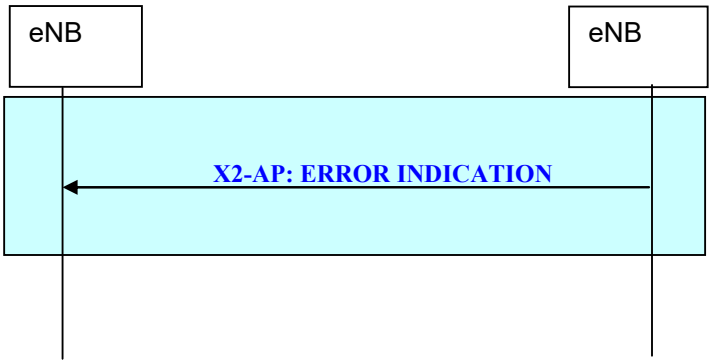

Figure 20.2.2.5-1: Error Indication procedure

20.2.2.6 Load Indication procedure

Inter-cell interference coordination in E-UTRAN is performed through the X2 interface. In case of variation in the interference conditions, the eNB signals the new lcondition to its neighbour eNBs e.g. the neighbour eNBs for which an X2 interface is configured due to mobility reasons.

The Load Indication procedure is used to transfer interference co-ordination information between neighboring eNBs managing intra-frequency cells.

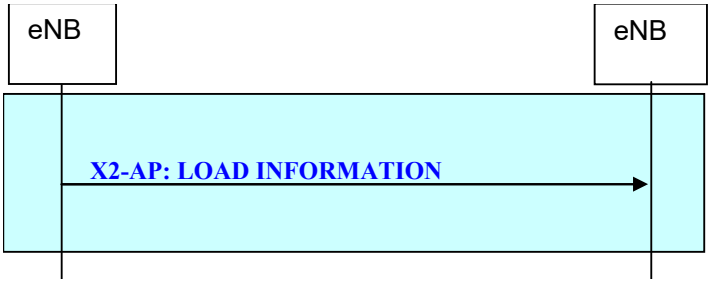

Figure 20.2.2.6-1: Load Indication procedure

20.2.2.7 X2 Setup procedure

The purpose of the X2 Setup procedure is to exchange application level data needed for two eNBs to interoperate correctly over the X2 interface.

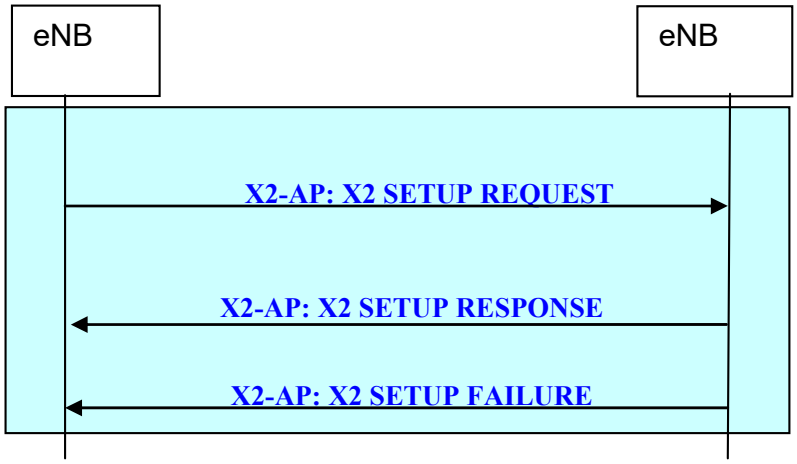

Figure 20.2.2.7-1: X2 Setup procedure

20.2.2.8 eNB Configuration Update procedure

The purpose of the eNB Configuration Update procedure is to update application level configuration data needed for two eNBs to interoperate correctly over the X2 interface.

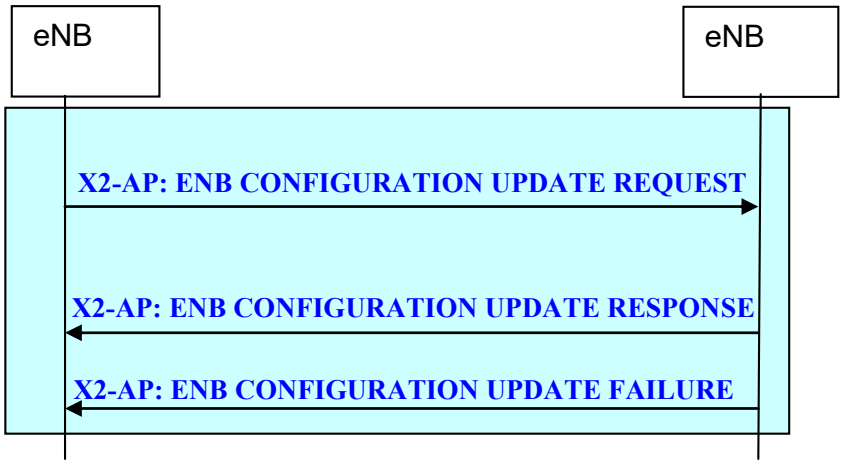

Figure 20.2.2.8-1: eNB Configuration Update procedure

20.2.2.9 Reset procedure

The Reset procedure is initiated by an eNB to align the resources with a peer eNB in the event of an abnormal failure. The procedure resets the whole X2 interface.

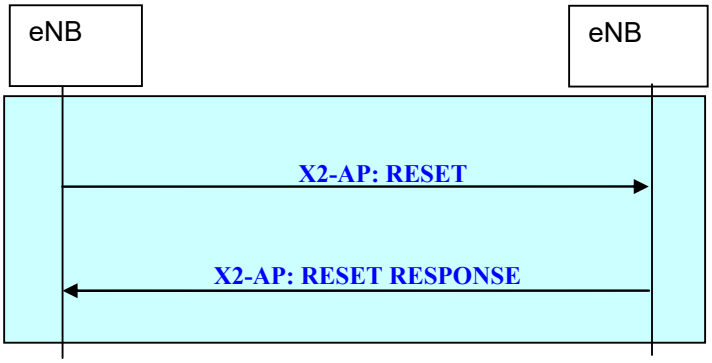

Figure 20.2.2.9-1: Reset procedure

20.2.3 Void

21 System and Terminal complexity

21.1 Overall System complexity

21.2 Physical layer complexity

21.3 UE complexity

22 Support for self-configuration and self-optimisation

22.1 Definitions

This concept includes several different functions from eNB activation to radio parameter tuning. Figure 22.1-1 is a basic framework for all self-configuration /self-optimization functions.

Self-configuration process is defined as the process where newly deployed nodes are configured by automatic installation procedures to get the necessary basic configuration for system operation.

This process works in pre-operational state. Pre-operational state is understood as the state from when the eNB is powered up and has backbone connectivity until the RF transmitter is switched on.

As described in Figure 21.1, functions handled in the pre-operational state like:

- Basic Setup and
- Initial Radio Configuration

are covered by the Self Configuration process.

NOTE: depending on the final chosen functional distribution in RAN, the feasibility of following items should be studied e.g.:

- To obtain the necessary interface configuration;
- Automatic registration of nodes in the system can be provided by the network;
- Alternative possibilities for nodes to obtain a valid configuration;
- The required standardization scope.

Self-optimization process is defined as the process where UE & eNB measurements and performance measurements are used to auto-tune the network.

This process works in operational state. Operational state is understood as the state where the RF interface is additionally switched on.

As described in Figure 21.1, functions handled in the operational state like:

- Optimization / Adaptation

are covered by the Self Optimization process.

NOTE: depending on the final chosen functional distribution in RAN the feasibility of following items should be studied e.g.:

- The distribution of data and measurements over interfaces relevant to RAN3;
- Functions/entities/nodes in charge of data aggregation for optimization purpose;

- Dependencies with O&M and O&M interfaces, in the self optimization process;
- The required standardization scope.

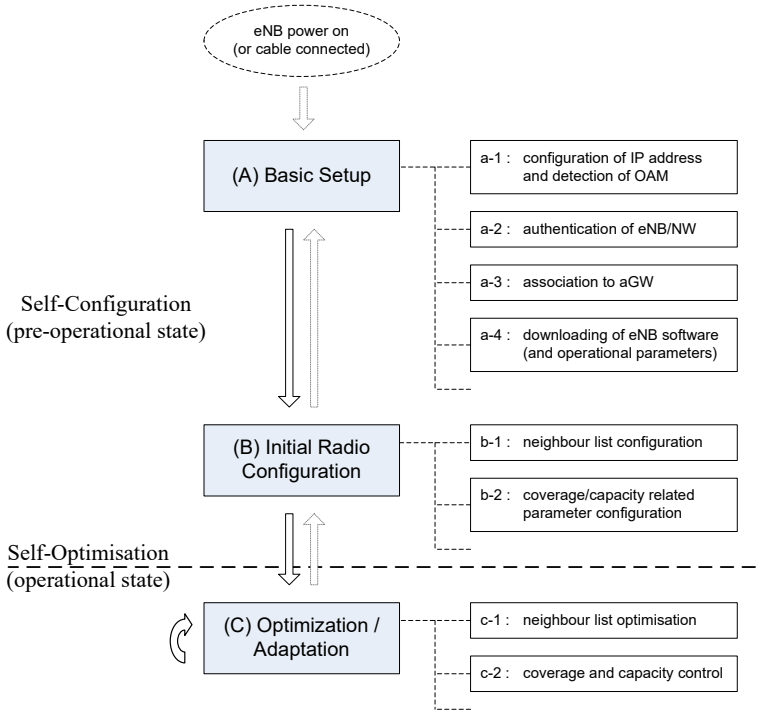

Figure 22.1-1: Ramifications of Self-Configuration /Self-Optimization functionality

22.2 UE Support for self-configuration and self-optimisation

UE shall support measurements and procedures which can be used for self-configuration and self-optimisation of the E-UTRAN system.

- UE shall support measurements and measurement reporting to support self-optimisation of the E-UTRAN system. Measurements and reports used for the normal system operation, should be used as input for the self-optimisation process as far as possible.

  NOTE: the UE impact should be carefully investigated and taken into account.

- The network is able to configure the measurements and the reporting for self-optimisation support by RRC signalling messages.

22.3 Self-configuration

22.3.1 Dynamic configuration of the S1-MME interface

22.3.1.1 Prerequisites

The following prerequisites are assumed:

- An initial remote IP end point to be used for SCTP initialisation is provided to the eNB for each MME. The eNB may be in pre-operational or operational state when this occurs.

How the eNB gets the remote IP end point(s) and its own IP address are outside the scope of this specification.

22.3.1.2 SCTP initialization

- For each MME the eNodeB tries to initialize a SCTP association as described in [8], using a known initial remote IP Endpoint as the starting point, until SCTP connectivity is established.

22.3.1.3 Application layer initialization

Once SCTP connectivity has been established, the eNodeB and MME shall exchange application level configuration data over the S1-MME application protocol with the S1 Setup Procedure, which is needed for these two nodes to interwork correctly on the S1 interface.

- The eNodeB provides the relevant configuration information to the MME, which includes list of supported TA(s), etc.
- The MME provides the relevant configuration information to the eNodeB, which includes PLMN ID, etc.
- When the application layer initialization is successfully concluded,the dynamic configuration procedure is completed and the S1-MME interface is operational.

22.3.2 Dynamic Configuration of the X2 interface

22.3.2.1 Prerequisites

The following prerequisites are assumed:

- An initial remote IP end point to be used for SCTP initialisation is provided to the eNB.

22.3.2.2 SCTP initialization

For candidate eNB the eNB tries to initialize a SCTP association as described in [8], using a known initial remote IP Endpoint as the starting point, until SCTP connectivity is established.

22.3.2.3 Application layer initialization

Once SCTP connectivity has been established, the eNB and its candidate peer eNB are in a position to exchange application level configuration data over the X2 application protocol needed for the two nodes to interwork correctly on the X2 interface.

- The eNB provides the relevant configuration information to the candidate eNB, which includes served cell information, etc.
- The candidate eNB provides the relevant configuration information to the initiating eNB, which includes served cell information, etc.
- When the application layer initialization is successfully concluded, the dynamic configuration procedure is completed and the X2 interface is operational.

22.3.2a Automatic Neighbour Relation Function

The purpose of the **Automatic Neighbour Relation** (ANR) function is to relieve the operator from the burden of manually managing Neighbour Relations (NRs). Figure 22.3.2a-1 shows ANR and its environment:

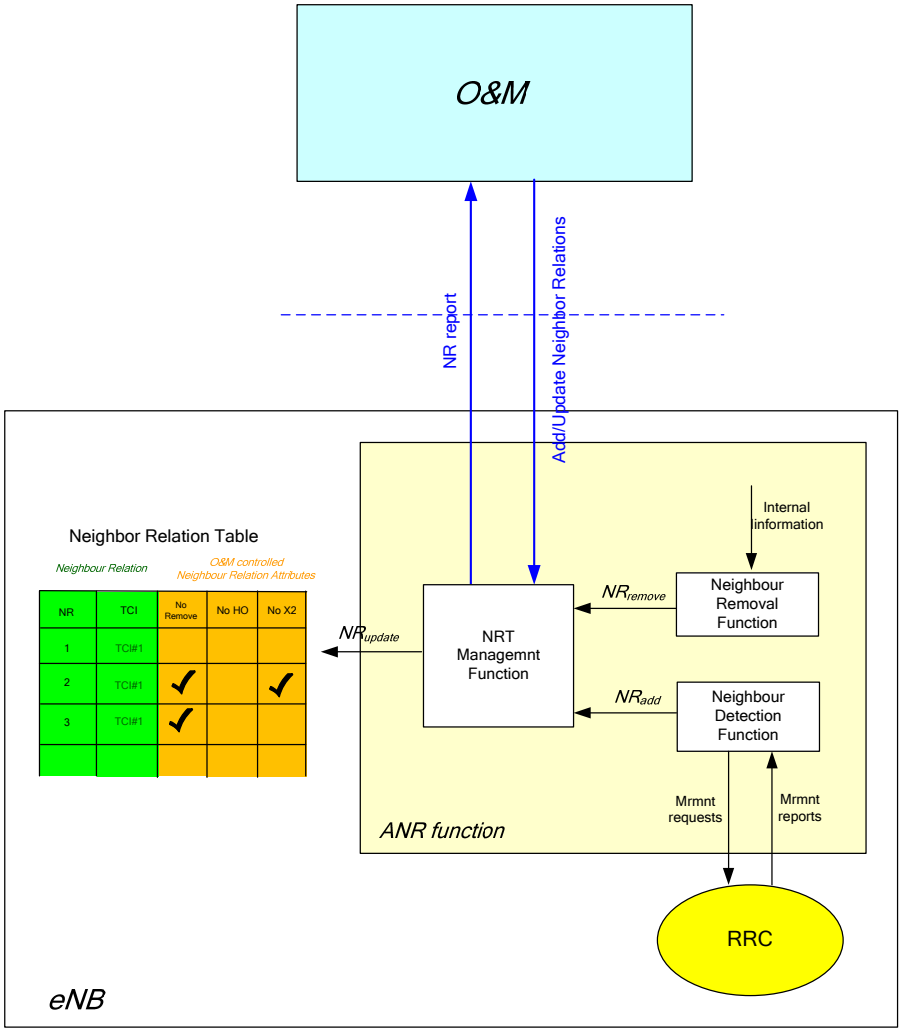

Figure 22.3.2a-1: Interaction between eNB and O&M due to ANR

The ANR function resides in the eNB and manages the conceptual Neighbour Relation Table (NRT). Located within ANR, the Neighbour Detection Function finds new neighbours and adds them to the NRT. ANR also contains the Neighbour Removal Function which removes outdated NRs. The Neighbour Detection Function and the Neighbour Removal Function are implementation specific.

A **Neighbour cell Relation** (NR) in the context of ANR is defined as follows:

An existing Neighbour Relation from a source cell to a target cell means that eNB controlling the source cell:

a) Knows the ECGI/CGI and PCI of the target cell.

b) Has an entry in the Neighbour Relation Table for the source cell identifying the target cell.

c) Has the attributes in this Neighbour Relation Table entry defined, either by O&M or set to default values.

For each cell that the eNB has, the eNB keeps a NRT, see Figure 22.3.2a-1. For each NR, the NRT contains the Target Cell Identifier (TCI), which identifies the target cell. For E-UTRAN, the TCI corresponds to the E-UTAN Cell Global Identifier (ECGI) and Physical Cell Identifier (PCI) of the target cell. Furthermore, each NR has three attributes, the NoRemove, the NoHO and the NoX2 attribute. These attributes have the following definitions:

- **No Remove**: If checked, the eNB shall not remove the Neighbour cell Relation from the NRT.

- **No HO**: If checked, the Neighbour cell Relation shall not be used by the eNB for handover reasons.
- **No X2:** If checked, the Neighbour Relation shall not use an X2 interface in order to initiate procedures towards the eNB parenting the target cell.

Neighbour cell Relations are cell-to-cell relations, while an X2 link is set up between two eNBs. Neighbour cell Relations are unidirectional, while an X2 link is bidirectional.

The ANR function also allows O&M to manage the NRT. O&M can add and delete NRs. It can also change the attributes of the NRT. The O&M system is informed about changes in the NRT.

22.3.3 Intra-LTE/frequency Automatic Neighbour Relation Function

The ANR (Automatic Neighbor Relation) function relies on cells broadcasting their identity on global level, E-UTRAN Cell Global Identifier (ECGI).

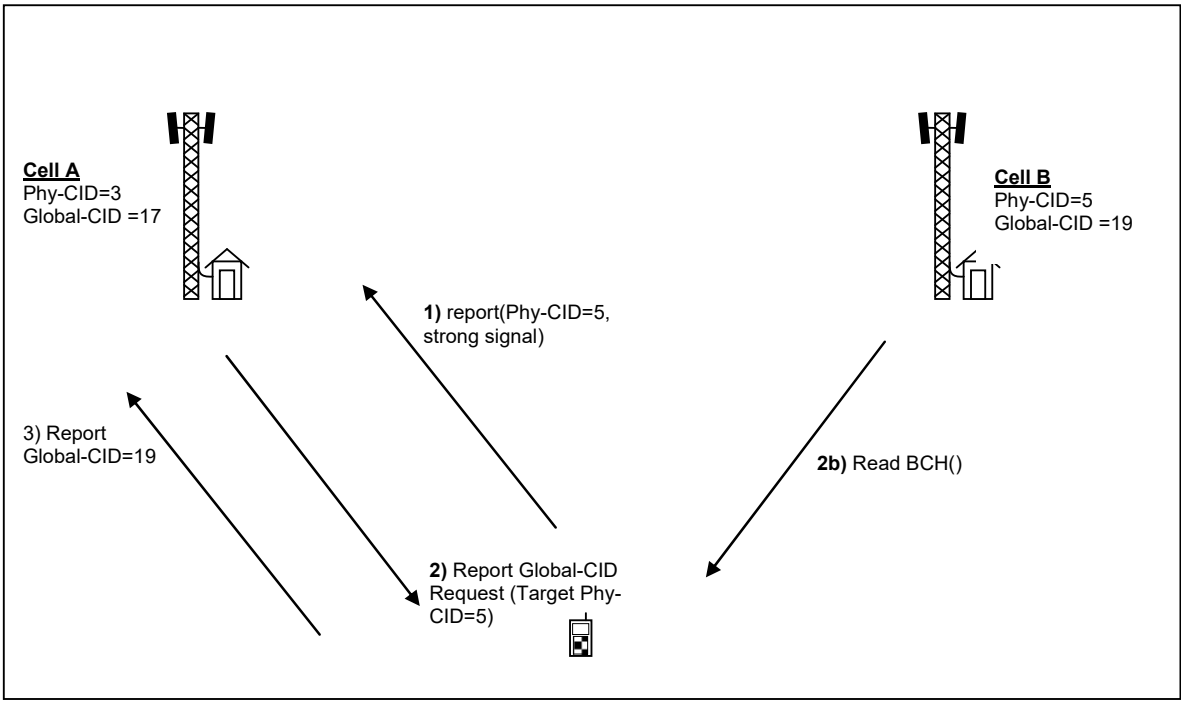

Figure 22.3.3-1: Automatic Neighbor Relation Function

The function works as follows:

The eNB serving cell A has an ANR function. As a part of the normal call procedure, the eNB instructs each UE to perform measurements on neighbor cells. The eNB may use different policies for instructing the UE to do measurements, and when to report them to the eNB. This measurement procedure is as specified in [16].

1. The UE sends a measurement report regarding cell B. This report contains Cell B's PCI, but not its ECGI.

When the eNB receives a UE measurement report containing the PCI, the following sequence may be used.

2. The eNB instructs the UE, using the newly discovered PCI as parameter, to read the ECGI (i.e. the PLMN ID, the CSG Indicator and the Cell Identity), the TAC and all available PLMN ID(s) of the related neighbour cell. To do so, the eNB may need to schedule appropriate idle periods to allow the UE to read the ECGI from the broadcast channel of the detected neighbour cell. How the UE reads the ECGI is specified in [16].
3. When the UE has found out the new cell's ECGI, the UE reports the detected ECGI (i.e. the PLMN ID, the CSG Indicator and the Cell Identity) to the serving cell eNB. In addition the UE reports the tracking area code and all PLMN IDs that have been detected.
4. The eNB decides to add this neighbour relation, and can use PCI and ECGI to:

a Lookup a transport layer address to the new eNB.

b Update the Neighbor Relation List.

c If needed, setup a new X2 interface towards this eNB. The setup of the X2 interface is described in section 22.3.2.

22.3.4 Inter-RAT/Inter-frequency Automatic Neighbour Relation Function

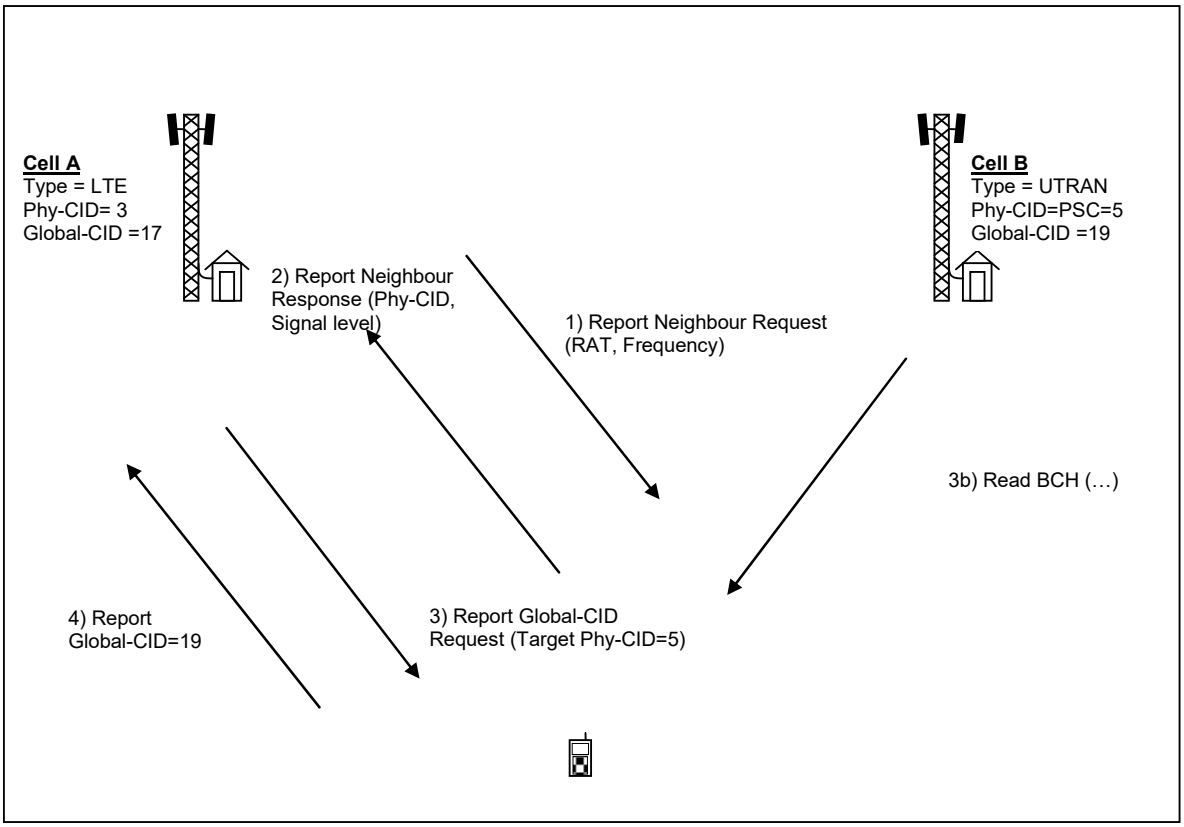

Figure 22.3.4-1: Automatic Neighbor Relation Function in case of UTRAN detected cell

For Inter-RAT and Inter-Frequency ANR, each cell contains an Inter Frequency Search list. This list contains all frequencies that shall be searched.

For Inter-RAT cells, the NoX2 attribute in the NRT is absent, as X2 is only defined for E-UTRAN.

The function works as follows:

The eNB serving cell A has an ANR function. During connected mode, the eNB can instruct a UE to perform measurements and detect cells on other RATs/frequencies. The eNB may use different policies for instructing the UE to do measurements, and when to report them to the eNB.

1 The eNB instructs a UE to look for neighbour cells in the target RATs/frequencies. To do so the eNB may need to schedule appropriate idle periods to allow the UE to scan all cells in the target RATs/frequencies.

2 The UE reports the PCI of the detected cells in the target RATs/frequencies. The PCI is defined by the carrier frequency and the Primary Scrambling Code (PSC) in case of UTRAN FDD cell, by the carrier frequency and the cell parameter ID in case of UTRAN TDD cell, by the Band Indicator + BSIC + BCCH ARFCN in case of GERAN cell and by the PN Offset in case of CDMA2000 cell.

When the eNB receives UE reports containing PCIs of cell(s) the following sequence may be used.

3 The eNB instructs the UE, using the newly discovered PCI as parameter, to read the CGI and the RAC of the detected neighbour cell in case of GERAN detected cells, CGI, LAC and, RAC in case of UTRAN detected cells

and CGI in case of CDMA2000 detected cells. For the Interfrequency case, the eNB instructs the UE, using the newly discovered PCI as parameter, to read the ECGI, TAC and all available PLMN ID(s) of the inter-frequency detected cell. The UE ignores transmissions from the serving cell while finding the requested information transmitted in the broadcast channel of the detected inter-system/inter-frequency neighbour cell. To do so, the eNB may need to schedule appropriate idle periods to allow the UE to read the requested information from the broadcast channel of the detected inter-RAT/inter-frequency neighbour cell.

4 After the UE has read the requested information in the new cell, it reports the detected CGI and RAC (in case of GERAN detected cells) or CGI, LAC and RAC (in case of UTRAN detected cells) or CGI (in case of CDMA2000 detected cells) to the serving cell eNB. In the inter-frequency case, the UE reports the ECGI, the, tracking area code and all PLMN-ID(s) that have been detected.

5 The eNB updates its inter-RAT/inter-frequency Neighbour Relation Table.

In the inter-frequency case and if needed, the eNB can use the PCI and ECGI for a new X2 interface setup towards this eNB. The setup of the X2 interface is described in section 22.3.2.

22.3.5 Framework for PCI Selection

The eNB shall base the selection of its PCI either on a centralized or distributed PCI assignment algorithm:

[Centralized PCI assignment] The OAM signals a specific PCI value. The eNB shall select this value as its PCI.

[Distributed PCI assignment] The OAM signals a list of PCI values. The eNB may restrict this list by removing PCI-s that are:

a) reported by UEs;

b) reported over the X2 interface by neighboring eNBs; and/or

c) acquired through other implementation dependent methods, e.g. heard over the air using a downlink receiver.

The eNB shall select a PCI value randomly from the remaining list of PCIs.

22.3.6 TNL address discovery

22.3.6.1 TNL address discovery of candidate eNB via S1 interface

If the eNB is aware of the eNB ID of the candidate eNB (e.g. via the ANR function) but not a TNL address suitable for SCTP connectivity, then the eNB can utilize the Configuration Transfer Function to determine the TNL address as follows:

- The eNB sends the eNB CONFIGURATION TRANSFER message to the MME to request the TNL address of the candidate eNB, and includes relevant information such as the source and target eNB ID.

- The MME relays the request by sending the MME CONFIGURATION TRANSFER message to the candidate eNB identified by the target eNB ID.

- The candidate eNB responds by sending the eNB CONFIGURATION TRANSFER message containing one or more TNL addresses to be used for SCTP connectivity with the initiating eNB, and includes other relevant information such as the source and target eNB ID.

- The MME relays the response by sending the MME CONFIGURATION TRANSFER message to the initiating eNB identified by the target eNB ID.

23 Others

23.1 Support for real time IMS services

23.2 Subscriber and equipment trace

Support for subscriber and equipment trace for E-UTRAN and EPC shall be as specified in [29], [30] and [31].

23.2.1 Signalling activation

All traces are initiated by the core network, even if the trace shall be carried out in the radio network.

If the eNB has received an UE CONTEXT RELEASE COMMAND message where the UE is associated to an E-UTRAN Trace Id then the eNB shall terminate the on-going Trace.

The following functionality is needed on the S1 and X2 interface:

- Support for inclusion of subscriber and equipment trace information in INITIAL CONTEXT SETUP REQUEST message over the S1 interface.
- Support for an explicit TRACE START message over the S1 interface.
- Support for inclusion of subscriber and equipment trace information in the HANDOVER REQUEST message over the X2 interface.
- Support for inclusion of subscriber and equipment trace information in the HANDOVER REQUEST message over the S1 interface.

A trace setup in the radio network will be propagated on the X2 interface at handover and on the S1 interface if the handover is carried out between MMEs.

23.2.2 Management activation

All conditions for Cell Traffic Trace are defined by the O&M. When the condition to start the trace recording is fulfilled the eNB will allocate a Trace Recording Session Reference and send it together with the Trace Reference to the MME in a CELL TRAFFIC TRACE message over the S1 interface.

Cell Traffic trace will not be propagated on the X2 interface or on the S1 interface in case of handover.

Annex A (informative): NAS Overview

This subclause provides for information an overview on services and functions provided by the NAS control protocol..

A.1 Services and Functions

The main services and functions of the NAS sublayer include:

- EPS Bearer control (see 3GPP TR 23.401 [17]);
- ECM-IDLE mobility handling;
- Paging origination;
- Configuration and control of Security.

A.2 NAS protocol states & state transitions

The NAS state model is based on a two-dimensional model which consists of EPS Mobility Management (EMM) states describing the mobility management states that result from the mobility management procedures e.g. Attach and Tracking Area Update procedures, and of EPS Connection Management (ECM) states describing the signalling connectivity between the UE and the EPC (see 3GPP TS 23.401 [17]).

NOTE: The ECM and EMM states are independent of each other and when the UE is in EMM-CONNECTED state this does not imply that the user plane (radio and S1 bearers) is established.

The relation between NAS and AS states is characterised by the following principles:

- EMM-DEREGISTERED & ECM-IDLE ⇒ RRC_IDLE:
  - Mobility: PLMN selection:
  - UE Position: not known by the network.
- EMM-REGISTERED & ECM-IDLE ⇒ RRC_IDLE:
  - Mobility: cell reselection;
  - UE Position: known by the network at tracking area level.
- EMM-REGISTERED & ECM-CONNECTED with radio bearers established ⇒ RRC_CONNECTED.
  - Mobility: handover;
  - UE Position: known by the network at cell level.

Annex B (informative): MAC and RRC Control

The E-UTRA supports control signalling in terms of MAC control signalling (PDCCH and MAC control PDU) and RRC control signalling (RRC message).

B.1 Difference between MAC and RRC control

The different characteristics of MAC and RRC control are summarized in the table below.

Table B.1-1: Summary of the difference between MAC and RRC control

	MAC control		RRC control
Control entity	**MAC**		**RRC**
Signalling	PDCCH	MAC control PDU	RRC message
Signalling reliability	~ 10^{-2} (no retransmission)	~ 10^{-3} (after HARQ)	~ 10^{-6} (after ARQ)
Control delay	Very short	Short	Longer
Extensibility	None or very limited	Limited	High
Security	No integrity protection No ciphering	No integrity protection No ciphering	Integrity protected Ciphering (FFS)

The main difference between MAC and RRC control lies in the signalling reliability. Due to the signalling reliability, signalling involving state transitions and radio bearer configurations should be performed by RRC. Basically, all signalling performed by RRC in UTRA should also be performed by RRC also for E-UTRA.

B.2 Classification of MAC and RRC control functions

The table below illustrates the classification of MAC and RRC control functions for E-UTRAN.

Table B.2-1: Classification of MAC and RRC control functions

		Controlled configuration/parameters
MAC control signalling	**PDCCH**	Short-lived (PRB) and dynamic (MCS) allocation Long-lived (PRB) and fixed (MCS) allocation (FFS) Timing Advance (FFS)
	MAC control PDU	Timing Advance (FFS) RLC related control PDU (FFS)
RRC control signalling	**RRC message**	Long-lived (PRB) and fixed (MCS) allocation (FFS) Activation/deactivation of long-lived (PRB) and/or fixed (MCS) allocation (FFS) TTI configuration for variable TTI length control (FFS) Static parameter configuration for UE inactivity control within RRC_ACTIVE (e.g. DRX/DTX periods)

Annex C (informative): System Information

This annex provides an overview of the classification and division of system information between static and flexible parts. Considerations about dedicated distribution of system information are also included.

C.1 SI classification

Five categories are identified for system information classification:

1. Information valid across multiple cells;
2. Information needed at cell/PLMN search;
3. Information needed prior to cell camping;
4. Information needed before cell access;
5. Information needed while camping on a cell.

From UEs' point of view, the information that is needed at cell selection and prior to camping are very similar. Before a UE can camp on a cell, it needs to know if the access is allowed in that cell. Thus it would be very beneficial to know all access restrictions already at cell search phase.

C.1.1 Information valid across multiple cells

The pieces of information that can be valid across multiple cells are:

- A-GNSS assistance data;
- PLMN identity(ies);
- Tracking area identity;

Note: the above text will be revised if it is agreed that a cell can be a member of more than one tracking area.

- Predefined configuration information;
- System Frame Number if it does not change from cell to cell (in case of synchronized network);
- Some measurement/mobility information (FFS).

C.1.2 Information needed at cell/PLMN search

In order to support full mobility within the serving frequency layer, the UEs need to perform cell search rather often and thus it is seen very important that the information needed in cell search phase is readily available, thereby improving cell search times and minimizing UE power consumption. If system information decoding is needed for identifying a cell, fast system information reception is needed in order to avoid too long identification times. For optimising PLMN search and make PLMN search fast and non-complex, the information needed for PLMN search should be easily available. The pieces of information that are needed at cell/PLMN search are:

- PLMN identity(ies): in order to acquire information to which PLMN the cell belongs, UEs need to receive PLMN identity(ies);

NOTE: There may be multiple PLMN identities for one cell.

- Measurement cell identity (FFS): there needs to be a cell identity in the system information, in order to allow UEs to identify the cell reliably for measurement purposes.

NOTE: UEs may identify the cell also based on the reference sequence detection;
There is another cell identity that identifies the cell within e.g. PLMN.

NOTE: UEs may have to check possible cell access restrictions before selecting cell/PLMN;
For cell/PLMN search UEs might need some L1 parameters.

C.1.3 Information needed prior to cell camping

Before a UE can camp on a cell, it needs to know any access related parameters in order to avoid camping on cells where access is forbidden. Thus prior to camping on a cell, a UE needs to know the following information:

- Any cell access restriction parameters, e.g.:
  - Tracking area identity: if the forbidden TA concept is adopted from legacy systems, then the UE needs to know whether the cell belongs to such forbidden TA.

Note: the above text will be revised if it is agreed that a cell can be a member of more than one tracking area.

  - Cell barring status and cell reservation status (FFS if needed per PLMN): the UE needs to know whether the cell is barred or reserved in order to avoid camping on a barred cell. Possibly also barring time might be needed in order to avoid UE to poll barring time frequently from the system information. Another option is that barring status is indicated also in the neighbour cell list.
  - Radio access limitation parameters:
    - Any radio condition parameters that limit the access to the cell e.g. similar to GSM C1/S criteria;
    - It is FFS if we need to have some band information indication also, in order to allow UEs to check possible band support before camping on the cell.

NOTE: UE may need some L1 parameters prior to camping.

C.1.4 Information needed prior to cell access

Once a UE has camped on a cell, the information needed prior to cell access (transmission/reception) includes at least:

- System Frame Number (SFN) (FFS)
  - SFN is probably needed by the UE to understand the scheduling parameters (e.g. scheduling information for secondary SI, RACH, PCH, E-MBMS etc.)
- L1 information, example set of needed L1 parameters:

Note: RAN1 needs to define what parameters are needed at this phase.

  - Carrier Bandwidth: FFS if separate bandwidths for UL and DL are needed;
  - Carrier center frequency (FFS);
  - Cyclic Prefix parameters: in order to decode DL-SCH UE needs to know the CP length arrangements;
  - MIMO related parameters: in order to take advantage of the multi-antenna transmissions like MIMO, the UE needs to know parameters of number of TX antennas, DL/UL pre-coding matrices, etc...;
  - Band Information: may be needed if the same DL carrier frequency has variable UL carrier frequency;
  - PDCCH, PHICH and PUCCH structure parameters: if PDCCH has variable configurations, the UE may need to know its channel structure at least partly. PDCCH is crucial to receive any allocation information. If Random Access Response is transmitted without PDCCH (e.g. synchronous transmission with Random Access Preamble), this information might not be required;
- RACH parameters (needed by the UE to start usage of RACH):

- RACH scheduling information: UE needs to know where in time (sub-frame) and frequency (Physical Resource Units) the RACH channel is located;
- RACH sequences: UE needs to know the RACH set of sequences to choose from. The sequences may not be fully of equal meaning (e.g. CQI can be classified for the sequences in a specific way);
- Access class restrictions: access class restrictions might be needed to limit the number of possible UEs using RACH;
- Persistence values: possible persistence value scheme parameters are needed for RACH usage;
- Other parameters related to RACH: UE needs to know the timers and parameters related to RACH e.g. how often the UE retransmits RACH and how many times the retransmission is allowed etc;
- RACH power control parameters: UE needs to know parameters related to UL power control.

C.1.5 Information needed while camping on a cell

When a UE has camped on a cell, it needs to continue measuring the neighbouring cells in order to stay camped. The pieces of information required for that are:

- Measurement parameters:
  - In order for the UE to start mobility procedures, it needs to receive parameters e.g. of reporting periods, reporting event parameters, time to trigger etc. UEs in RRC_IDLE state need cell reselection parameters. UEs in RRC_CONNECTED state need parameters of the neighbour cells e.g. for handover and for error recovery cases.
  - Neighbour cell lists are needed to start neighbour cell measurements. UEs in different states may use different sets of neighbour cell lists. Neighbour cell list may contain following parameters:
    - Some L1 parameters: FFS what parameters are needed in the neighbour cell list;
    - All information that is needed for camping: see sub-clauses C.2.2 and C.2.3 (FFS);
    - Synchronization information: indicating whether the neighbouring cell is synchronized to the current cell i.e. the cell sending the neighbour cell list (FFS);
    - PLMN identity(ies) & tracking area identity (FFS);

Note: The above text will be revised if it is agreed that a cell can be a member of more than one tracking area.

  - Other 3GPP RAT information: e.g. neighbour cell information of GERAN/UTRAN cells;
  - Information of non-3GPP access systems (e.g. WIMAX).
- Secondary NAS parameters:
  - An y NAS parameters that were not presented earlier e.g. cell identity uniquely identifying cell within wide area e.g. PLMN;
  - Cell identity (PLMN level) (FFS if this should be in category “Information needed prior to cell access”).
- Secondary UE timer values: any timer values that affect UE’s behaviour.
- Paging parameters: UEs in ECM-IDLE state need to receive paging parameters e.g. DRX periods and scheduling.
- Clock time (FFS): the network might send system clock in order to let UEs update their clock time e.g. in the user interface;
- MBMS service parameters: any parameters needed for MBMS reception e.g. MBMS multiplexing parameters, MBMS frequency;

NOTE: the presence of these parameters also indicate the presence of MBMS service in the cell (dedicated or mixed cell).

- Signalling Radio Bearer parameters: may be broadcasted unless they are standardized.

C.1.6 Thoughts about category division

From UEs' point of view the categories in sub-clauses C.1.2 and C.1.3 are very similar. Thus it is questionable whether we need to differentiate procedures between cell search/selection/camping and PLMN search.

From UEs' point of view, the difference between the procedure for cell search during RRC_CONNECTED and the procedure for cell search during RRC_IDLE state maybe small. When the UE is in RRC_CONNECTED state, it measures the neighbour cell and executes handovers commanded by the network.

C.2 Division of SI between static and flexible parts

System information distribution can be classified into two distinctive parts: static and flexible. Static part is sent more often, say once per frame, in the cell and has quite a limited capacity for information transfer. The flexible part has flexible amount of scheduled resources available and thus most of the SI information is contained there.

C.2.1 Static part

The static parts of the System Information are:

- L1 information in order to decode the rest of the information

Note: detailed information on the required information will be defined by RAN1;

- Measurement Cell identity (FFS): it may be possible that L1 channels do not identify the cell. Then some Cell identity needs to be sent on system information part;

- Any cell access restriction parameters e.g.:

  - Tracking area identity: if forbidden TA concept is adopted from legacy systems then UEs need to know whether the cell belongs to forbidden TA;

Note: the above text will be revised if it is agreed that a cell can be a member of more than one tracking area.

  - Cell barring and cell reservation status (FFS if needed per PLMN): UEs need to know whether cell is barred or reserved in order to avoid camping on barred cell. Possibly also barring time might be needed in order to avoid UEs to poll barring time frequently from the system information;

  - Radio access limitation parameters: any radio condition parameters that limit the access to the cell e.g. similar to GSM C1/S criteria;

  - PLMN identity(ies): in order to acquire information to which PLMN cell belongs, UEs need to receive PLMN identity(ies).

NOTE: there may be multiple PLMN identities for one cell.

- Scheduling parameters:

  - All of the scheduling information of flexible part or part of scheduling information (e.g. scheduling block) of flexible part. If static part consists of multiple SI blocks then it may be necessary to have scheduling information of those blocks in the static part.

    - Scheduling block defines, from where (time and frequency resources) to decode the SI blocks of the scheduled flexible part. It may be possible that scheduling of scheduling block is standardized, then this information can be omitted from the static part. If several types of scheduling blocks are defined , scheduling information might be sent for each scheduling block.

- Value_tag(s): informs whether the information transmitted on the flexible part has changed. This is needed in order to avoid UEs from reading any unchanged information repeatedly. Another possibility is to send this information in PDCCH, but possibly it would cause too much overhead.

NOTE: It also is possible to include Value_tag for SI on the flexible part indicating more precisely what changes have occurred in the system information.

NOTE: There may be a need for indicating changes in static part with value tag also, if static part consists of multiple SI blocks.

Table C.2.1-1 gives an estimate of the size of the elements mentioned above.

Table C.2.1-1: Initial rough estimates for static part capacity requirement

Information element	Bits
Cyclic Prefix (FFS)	2
Carrier BW (FFS)	3-8
MIMO parameters (FFS)	2 (+ 3)
Cell Id (FFS)	9
Tracking Area Id (+ FFS how many additional)	[16-28]
Cell Barring status+ possible Time of barring	1+4
Cell reservation status	[2]
Radio access limitation parameters	12
PLMN id(s) maximum of 5 (24 bits per one) - see Note	120
Scheduling parameters	(12-108)
Value Tag	4
SFN (FFS)	11

NOTE: It might not be necessary to send the Mobile Country Code part of the PLMN identity for each indicated PLMN to limit the number of bits.

C.2.2 Flexible part

The flexible part has different types of Information Elements which require independent scheduling in order to allow fast enough reception and not to waste transmission capacity. For example, the requirement to receive cell access parameters is very different than e.g. the clock time. Thus following flexible part division should be considered:

- Scheduling block: scheduling information of the secondary part of the System Information.
- Access parameters:
  - All parameters not present in the primary part (e.g. some L1 parameters);
  - RACH parameters;
  - Power control parameters;
  - Paging parameters;
  - Any timer values needed for operating in the cell and in the network.
- Measurement related parameters:
  - Neighbour cell lists;
  - Cell selection/reselection parameters;

NOTE: Some of these parameters are included in the static part element “Radio access limitation parameters.”

  - Measurement control information;
- Non vital information:
  - Clock time;
  - Positioning (A-GNSS etc.) information;

- Service parameters (e.g. MBMS parameters);
- Secondary NAS parameters.

C.2.3 Information whose location is FFS

The location of the following information is FFS:

- System Frame Number: SFN might be needed very fast i.e. for HO purposes. SFN might be needed also for decoding scheduling block parameters, but on the other hand it might be requested not to send often changing information on the static part in order to be able to make time soft combining. Further investigation on the SFN broadcasting is thus needed.

C.2.4 Dedicated part

The dedicated part is embedded in the RRC message that is meant for sending System Information Elements in unicast mode e.g. for HO purposes, positioning purposes …. The UE needs some information for the neighbouring cell to access it, this is needed to limit the interruption times caused by HO execution. When a UE receives a HO COMMAND it needs at least following information from the target cell:

- All information in the static part (see sub-clause C.2.1): may be received by the UE by itself;
- Most of the information from the access parameters (see sub-clause C.2.2): is favourably delivered by dedicated manner via the source cell, because the UE might not have time to get all the necessary secondary SI from the target cell;
- System Frame Number is needed to minimize the interruption times during the HO procedure. Most probably the UE needs to receive (at least confirm) the SFN directly by the neighbour cell SI reading, because giving the SFN via source cell may cause some inaccuracy to the SFN.

Annex D (informative): MBMS

D.1 MBMS control & functions

The E-UTRAN supporting MBMS comprises eNBs and co-ordinating functions.

The functions hosted by the eNB may be:

- Scheduling and transmission of MBMS control information;
- Scheduling of single-cell MBMS transmissions;
- Transmission of single-cell and multi-cell MBMS services;
- Radio bearer control for MBMS.

The co-ordinating functions may include:

- Distribution of MBMS services;
- Co-ordination of multi-cell MBMS transmissions;
- MBMS E-RAB control.

It is FFS which node in E-UTRAN performs the co-ordination functions.

D.2 MBMS transmission

A point-to-multipoint radio bearer is used to carry MBMS traffic. It is FFS whether a point-to-point radio bearer is also used to carry MBMS traffic or not. Improvements for single-cell MBMS transmission (e.g. HARQ) and MCS that would enable potential removal of p-t-p transmissions for MBMS are FFS.

A frequency layer can be dedicated to MBMS transmissions:

- When a cell belongs to a frequency layer dedicated to MBMS transmissions (MBMS-dedicated cell):
  - The MBMS transmission (MTCH and MCCH) occurs on MCH or DL-SCH;
  - No uplink or counting mechanism supported;
  - No support for unicast data transfer in the cell;
  - The occurrence of paging messages on the frequency layer dedicated to MBMS transmission is FFS:
    - If paging messages were allowed, the UE could answer in a non-E-UTRA cell e.g. UTRA cell (FFS);
  - The possible multi-cell p-t-m transmission with MBSFN operation on the MCH of the MBSFN area is semi-statically configured e.g. by O&M.
  - Single-cell p-t-m transmission is possible.
- When a cell does not belong to a frequency layer dedicated to MBMS transmissions (MBMS/Unicast-mixed cell):
  - Transmission of both unicast and MBMS transmissions in the cell is done in a co-ordinated manner on DL-SCH and or MCH+DL-SCH (FFS);
  - The possible MBSFN operation on the MCH of the MBSFN area is semi-statically configured e.g. by O&M; or the SFN area is dynamic and may be based on counting mechanisms (FFS).
  - Counting is possible (FFS);

- P-t-p transmission on DL-SCH is FFS.

There are two types of MBMS transmissions in E-UTRA/E-UTRAN:

a) Single-cell transmission (no MBSFN operation):

- The MBMS service, e.g. message distribution, is transmitted only on the coverage of a specific cell;
- The MBMS service (MTCH and MCCH) may be transmitted on DL-SCH or MCH (FFS);
- Combining of MBMS transmission from multiple cells is not supported;
- Counting for switching between p-t-p and p-t-m radio bearer may be supported (FFS);
- The p-t-m/p-t-p switching points are either dynamically decided based on counting mechanism or semi-statically configured by O&M (FFS).

b) Multi-cell transmission (MBSFN operation):

- The MBMS service (MTCH and MCCH) is transmitted on MCH;
- Combining is supported with SFN;
- Synchronous transmission.

The BCCH indicates where the MCCH(s) are:

- One (or none) MCCH per cell for cell specific transmission;
- MCCH(s) sent in MBSFN area for non-cell specific transmission.

Having a feedback mechanism for MTCH transmission is FFS: statistical feedback, TTI based NACK or something else. Also is FFS if the re-transmission is a single cell transmission in all cases.

D.3 Deployment Scenarios

In terms of deployment scenarios of MBMS in E-UTRAN, the following alternatives can be listed:

- Carrier type: dedicated vs. mixed carrier;
- MBSFN transmission: multi-cell vs. single-cell transmission;
- Radio bearer type: p-t-m vs. p-t-p;
- Counting: yes or no;
- Audience measurement: yes or no;
- ON/OFF control of MBMS service delivery: yes or no;
- PTP / PTM radio bearer switching: yes or no;

Table D.3-1 below lists the combinations of the above alternatives that are specifically supported in E-UTRAN:

Table D.3-1: MBMS Deployment Scenarios

#	Carrier	Transmission	RB	Counting	Comments
1	dedicated	multi-cell	p-t-m	no	From 1 to n cells Audience measurement (FFS)
2	mixed	multi-cell	p-t-m	no	Audience measurement (FFS)
3	mixed	single-cell	p-t-m	yes	

D.4 MCCH Information

The following information types are proposed as candidates for inclusion on MCCH. Stage 3 work may group certain information into, for example, modified services information and unmodified services information, and to avoid duplication and reduce transmission size, group parameter sets into, for example, indexed common services information. It is FFS whether the information of the same type will map to the same IE. The information types described here are linked to the following use cases:

1. UE camping in a cell monitoring for session start(s).
2. UE powering up, entering a cell or on activation of a service, seeking to detect whether a service that it requires is ongoing in the cell.
3. UE commencing to receive a service or required to change parameters following reconfiguration.
4. UE receiving an MBMS service and monitoring for session stop, recounting indication, reconfiguration indication and revised parameters. Possibly also dynamic scheduling.
5. UE performing a cell reselection seeking information that aids service continuity.

Table D.4-1: Potential MCCH Information Types

Information Type	Use Case
Service and session identities	
Session start – own layer	1
Session start – another (mixed or dedicated) layer (FFS)	1
Ongoing or by request (FFS) - own layer	2
Ongoing or by request - another (mixed or dedicated) layer (FFS)	2, 5[3]
Short identities indexing service identities	2,3,4,5
Service parameters – radio bearer information, physical channel configuration information, scheduling information (Note 1)	
For services (MTCH) transmitted on DL-SCH	3, 4, 5
For services (MTCH) transmitted on MCH	3, 4, 5
Required action – whilst receiving a service	
Session stop indication	4
Reconfiguration indication	4
Recounting indication (FFS)	4
Change state (FFS)	4[2], 5[2]
Required action – service access	
Make service request (FFS)	3
Change state (FFS)	3[2]
Counting control information:	
For services transmitted on DL-SCH	3, 4
For services transmitted on MCH (FFS)	3, 4
Single-cell MTCH feedback control (FFS)	3, 4
Indication of the existence of other layers (dedicated, mixed) (FFS)	1, 2,5[3]
Other frequency layer parameters (FFS)	1, 2, 5[3]
Neighbour cell information e.g. service existence, MTCH or MCCH parameters (FFS)	5
MBSFN area edge cell indication or identity (FFS)	5
Parameters that identify how to receive scheduling information(FFS)	3, 4, 5
S-MCCH parameters and scheduling (on P-MCCH)	2, 4, 3, 5
MCCH modification indication (FFS)	1, 4

Note 1:	Scheduling information may take two forms, e.g. semi-static scheduling of the TTIs in which MTCH transmissions can take place and short-term scheduling which indicates whether transmissions take place within these TTI, e.g. for DRX (FFS).
Note 2:	The case represented here is the FFS scenario where an eNB requires a UE to enter RRC Connected state in order to receive a service. This relates to a single-cell transmission e.g. to perform feedback. A UE might be required to do this on taking up the service, on transferring into a cell whilst receiving the service or whilst receiving the service when in a cell.
Note 3:	The use case represents case 2 of the service continuity requirements as described in section 15.4.

Annex E (informative): Drivers for Mobility Control

Table E-1 lists the drivers, limitations, and their applicability to intra-frequency, inter-frequency, and inter-RAT scenarios. Each driver and limitation is described in Section E.1 and E.2, respectively. For inter-frequency and inter-RAT scenarios, the applicable drivers are shown in detail for IDLE/ACTIVE modes and their transitions in Section E.3.

Table E-1: Drivers and limitations for mobility control and applicability to mobility scenarios.

	#	Drivers/limitations	Intra-frequency	Inter-frequency	Inter-RAT
Drivers	1	Best radio condition	X	X	X
	2	Camp load balancing		X	X
	3	Traffic load balancing		X	X
	4	UE capability		X	X
	5	Hierarchical cell structures		X	X
	6	Network sharing		X	X
	7	Private neworks/home cells		X	X
	8	Subscription based mobility control		X	X
	9	Service based mobility control		X	X
	10	MBMS		X	X
Limitations	11	UE battery saving	X	X	X
	12	Network signalling/processing load	X	X	X
	13	U-plane interruption and data loss	X	X	X
	14	OAM complexity	X	X	X

As shown in Table E.1, the applicable drivers depend on the mobility scenario, i.e., intra-frequency, inter-frequency, and inter-RAT:

- **Intra-frequency mobility**: intra-frequency mobility is the most fundamental, indispensable, and frequent scenario. With the frequency reuse being one in E-UTRAN, applying any driver other than the "best radio condition" to intra-frequency mobility control incur increased interference and hence degraded performance. As such, only the "best radio condition" driver is applicable to intra-frequency mobility. Note that the exact definition of "intra-frequency mobility" is yet unclear, and shall be clarified with RAN1.

- **Inter-frequency mobility**: as in UTRAN, an operator may have multiple carriers/bands for E-UTRAN working in parallel. The use of these frequency layers may be diverse. For example, some of these frequency layers may utilise the same eNB sites and antenna locations (i.e., co-located configuration), whereas some may be used to form a hierarchical cell structure (HCS), or even be used for private networks. Some frequency layers may provide MBMS services, while some may not. Moreover, E-UTRAN carriers/bands may be extended in the future to increase capacity. For example, as E-UTRAN gains popularity, an operator may decide to convert existing UTRAN carriers into E-UTRAN ones. The operator may also acquire additional carriers/bands, that are not necessarily contiguous. As a consequence, different UE band capabilities may coexist and different carriers/bands may operate at different areas within a network. The E-UTRAN standard should readily support such carrier/band extensions and diverse network configurations, providing flexibility and efficiency. Therefore, a number of drivers apply to inter-frequency mobility control, in addition to the "best radio condition" driver.

- **Inter-RAT mobility**: the aspects that need to be considered for inter-RAT are similar to those for inter-frequency. For mobility solutions to be complete with the inter-RAT drivers, relevant updates would be

necessary on the legacy (UTRAN/GERAN) specifications. This will add to the limitations, which are evidently more effective in inter-RAT. Although the drivers/limitations need to be assessed per objective RAT (UTRAN/GERAN), the solutions should be made common as much as possible to reduce any complexity.

E.1 Drivers

The drivers for mobility control are described in the following sections.

E.1.1 Best radio condition

The primary purpose of cell reselection, regardless of intra-frequency, inter-frequency, or inter-RAT, is to ensure that the UE camps on/connects to the best cell in terms of radio condition, e.g., path loss, received reference symbol power, or received reference symbol Es/I0. The UE should support measurements to suffice this aspect. For E-UTRAN cells, the frequency domain scheduling and channel/symbol mapping may have some implications to designing the measurements and reselection/reporting criteria. The UE would also have to check that the selected cell falls within the accessible range (in terms of signal strength and possibly also in terms of propagation delay, i.e., check if it falls within the dynamic range of timing advance, FFS).

E-UTRAN should support good mobility even when the radio environment changes suddenly, e.g., when the UE enters a tunnel or in a Manhattan-like street cell scenario. It should be discussed whether a special mechanism is needed to cope with such sudden changes in radio environment or it can be handled with good radio network planning practices. In either case, the system design should minimise any side effects of counteracting the sudden changes in the radio environment (e.g., ping-pongs).

For inter-frequency/RAT mobility, the UE needs idle gaps to perform measurements on other frequency layers/RATs. In addition, for inter-RAT, E-UTRAN measurements while the UE is in another RAT (UTRAN/GERAN) need to be supported. It should be discussed whether in certain cases (e.g., co-located E-UTRAN cells within the same frequency band) the measurements can be omitted.

E.1.2 Camp load balancing

This is to distribute idle state UEs among the available bands/carriers/RATs, such that upon activation, the traffic loading of the bands/carriers/RATs would be balanced. At least the path loss difference between different bands should be compensated to avoid UEs concentrating to a certain frequency layer (e.g., lower frequency bands due to the propagation nature). A deliberate mechanism would be necessary to avoid UEs concentrating to a certain RAT (e.g., E-UTRAN). Various solutions have been presented including the use of Qoffset and an approach of limiting the frequency layers for camping.

For inter-RAT, this driver also includes the aspect of balancing the loading of core network nodes of different RATs. Nevertheless, for intra- E-UTRAN, the core network load aspect is out of scope, since MME/Serving Gateway relocation by itself should not cause any radio mobility procedure (but only NAS procedures like NAS ID and security updates).

E.1.3 Traffic load balancing

This is to balance the loading of active state UEs, using redirection for example. In E-UTRAN, traffic load balancing is essential because of the shared channel nature. That is, the user throughput decreases as the number of active UEs in the cell increases, and the loading directly impacts on the user perception. A solution is desired that causes minimum impact on the user perception. This implies that inter-layer transitions are preferably done during data inactivity (e.g., DRX) or transition to the idle state. Although this driver is also applicable to inter-RAT, for inter-RAT, the “service dependent control” driver may be more dominant than the load balancing aspect.

E.1.4 UE capability

As E-UTRAN bands/carriers may be extended in the future, UEs having different band capabilities may coexist within a network. It is also likely that roaming UEs have different band capabilities. Overlaying different RATs adds to this variety. The mobility solution should cope with the coexistence of various UE capabilities in an efficient manner.

E.1.5 Hierarchical cell structures

As in UTRAN, hierarchical cell structures (HCS) may be utilised in E-UTRAN to cover for example, indoors and hot spots efficiently. It is possible that E-UTRAN is initially deployed only at hot spots, in which case this driver becomes essential for inter-RAT, not just for inter-frequency. Another use case would be to deploy a large umbrella cell to cover a vast area without having to deploy a number of regular cells, while providing capacity by the regular cells on another frequency. While HCS can be seen as a solution to reduce measurement and signalling loads, to optimise HCS usage, mobility control should take into account the UE mobility (e.g., speed). This however implies that sufficient mobility detection is also required. Although HCS is not addressed as a mobility driver for intra-frequency mobility, intra-frequency HCS deployment should not be restricted.

E.1.6 Network sharing

At the edge of a shared portion of a network, it will be necessary to direct UEs belonging to different PLMNs to different target cells. The mobility solutions in both idle and active states should therefore support differentiation between UEs of different operators.

E.1.7 Private networks/home cells

Cells that are part of a sub-network should prioritise the camping on that sub-network. UEs that do not belong to private sub-networks should not attempt to camp or access them. Although this could be resolved by the use of forbidden TAs as in UTRAN, a more deliberate mechanism may be needed as some of these sub-networks could be very small, e.g., one home.

E.1.8 Subscription based mobility control

This mobility driver aims to limit the inter-RAT mobility for certain UEs, e.g., based on subscription or other operator policies. The system should provide means to disallow access on certain RATs (including E-UTRAN) as done with "LA reject" in legacy systems. It should be possible for the operator to trigger a subsequent UE action such as a cell or PLMN selection.

E.1.9 Service based mobility control

An operator may have different policies in allocating frequencies to certain services. For example, the operator may concentrate VoIP UEs to a certain frequency layer or RAT (e.g., UTRAN or GERAN), if evaluations prove this effective. UEs requiring higher data rates may better be served on a frequency layer or RAT (e.g., E-UTRAN) having a larger bandwidth. The operator may also want to accommodate premium services on a certain frequency layer or RAT, that has better coverage or larger bandwidth.

This driver is essential for inter-RAT, due to the different QoS levels provided by different RATs. The nature of the service being requested (e.g., QoS and traffic behaviour) should be considered in controlling mobility, so that services are accommodated in the best suitable RAT. Note that such service dependent control shall only be based on network decisions and not on UE decisions (i.e., no UE based service dependent cell reselection), except for MBMS scenarios.

E.1.10 MBMS

As MBMS services may be provided only in certain frequency layers, it may be beneficial/necessary to control inter-frequency/RAT mobility depending on whether the UE receives a particular MBMS service or not. For MBMS scenarios only, UE based service dependent cell reselection might be considered acceptable. This aspect also depends on the UE capability for simultaneous reception of MBMS and unicast.

E.2 Limitations for mobility control

While the issues mentioned above drive E-UTRAN towards “aggressive” mobility control, the limiting factors also have to be considered. The factors listed below apply to all intra-frequency, inter-frequency, and inter-RAT mobility scenarios.

E.2.1 UE battery saving

The mobility solution should not consume excessive UE battery, e.g., due to measurements, measurement reporting, BCH reception, or TA update signalling. This could be achieved for example by setting appropriate measurement rules such as S-criteria, hysteresis, and time-to-trigger. Adaptive control of some measurement/mobility parameters (e.g., based on DRX, cell size, or mobility) may also be considered as a countermeasure. To reduce TA update signalling, TA allocations can be differentiated depending on the UE speed or the mobility vector, on top of appropriate TA planning. Effects on additional delays (e.g., paging) should also be investigated if means such as “long DRX” are used to achieve these savings.

It should be investigated together with RAN4 if a coupling between measurements accuracy and DRX (as in UTRAN) is also acceptable for E-UTRAN.

E.2.2 Network signalling/processing load

The mobility solution should not cause excessive network signalling/processing load. This includes over-the-air signalling, S1/X2 signalling, and processing load at network nodes. Unnecessary handovers and cell reselections should be avoided, and PCH and BCH signalling, as well as dedicated signallings, should be limited. This could be achieved by similar countermeasures as for UE battery saving.

E.2.3 U-plane interruption and data loss

U-plane interruption and data loss caused by the mobility solution should be limited. The required QoS should be satisfied in any case.

E.2.4 OAM complexity

The mobility solution should not demand excessive efforts in operating/maintaining a network. For example, when a new eNB is added or an existing eNB fails, the mobility solution should not incur excessive efforts to set up or modify the parameters. Means should be studied to integrate the mobility solutions in the concept of “self-optimisation” to minimise manual processes. Reducing the neighbour list information in E-UTRAN would also be a countermeasure to this requirement.

E.3 Inter-frequency/RAT drivers

E.3.1 Mobility control during IDLE mode

This is to control the mobility of UEs during IDLE mode, i.e., cell reselection. Table E.3.1-1 summarises applicability of the drivers for different inter-frequency/RAT scenarios and necessary features to support the drivers. Note that in Tables E.3.1-1, E.3.2-1, E.3.3-1, E.3.4-1, an “X” in the table indicates that the driver is essential, whereas an "(X)" indicates that the driver may be reduced in support depending on the complexity incurred. Furthermore in Tables E.3.1-1, E.3.2-1, E.3.3-1, E.3.4-1, the following abbreviations are used:

- L➔L: LTE to LTE inter-frequency mobility;
- L➔U: LTE to UTRAN inter-RAT mobility;
- U➔L: UTRAN to LTE inter-RAT mobility;
- L➔G: LTE to GERAN inter-RAT mobility;
- G➔L: GERAN to LTE inter-RAT mobility.

Table E.3.1-1: Mobility control during IDLE (cell reselection).

#	Drivers	Applicability					Necessary features to support drivers
		L➔L	L➔U	U➔L	L➔G	G➔L	
1	Radio condition	X	X	X	X	X	Inter-frequency/RAT measurements (solutions to

							mitigate measurement load should be considered, e.g., S-criteria); Cell reselection and reselection criteria.
2	Camp load balancing	X	X	X	(X)	(X)	Mechanism to prioritise cell reselection to certain layer/RAT, depending on the loading of layers/RATs; Load information exchange (not needed if balancing is inadaptive, i.e., only based on subscriber penetration on each band/RAT.).
3	Traffic load balancing						N/A
4	UE capability	(X)	X	X	X	X	Mechanism to prioritise cell reselection to certain layer/RAT, depending on the UE capability.
5	HCS	(X)	(X)	(X)	(X)	(X)	Mobility detection (e.g., number of crossed cells); Mechanism to prioritise cell reselection to certain layer/RAT, depending on the UE speed (e.g., HCS mechanism as in UTRAN).
6	Network sharing	X	X	X	X	(X)	Mechanism to direct the UE to the appropriate PLMN at a network sharing border; Mechanism to restrict UE measurements and reselection to cells that are entitled to access.
7	Private networks / home cells	X	(X)	X		(X)	Mechanism to prioritise reselection to private/home cells that are entitled to access; Mechanism to restrict UE measurements and reselection to cells that are entitled to access; Other unidentified features, FFS.
8	Subscription / Policy based mobility control	X	X	X	(X)	(X)	Mechanism to prioritise cell reselection to certain layer/RAT, depending on the subscription information or any other operator policy (e.g., for L➔L there may be cases where an operator has policy in allocating UEs to certain frequencies due to different carrier bandwidths).
9	Service based mobility control						N/A
10	MBMS	X	(X)	X			Mechanism to prioritise cell reselection to the layer/RAT, depending on whether the UE requires reception of a certain MBMS transmission.

E.3.2 Mobility control upon IDLE to ACTIVE transition

This is to control the mobility of UEs upon IDLE to ACTIVE transition, i.e., redirection upon RRC or U-plane establishment. Table E.3.2-1 summarises applicability of the drivers for different inter-frequency/RAT scenarios and necessary features to support the drivers.

Table E.3.2-1: Mobility control upon IDLE to ACTIVE transition (redirection upon RRC/U-plane establishment)

#	Drivers	Applicability					Necessary features to support drivers
		L➔L	L➔U	U➔L	L➔G	G➔L	
1	Radio condition	(X)	(X)				Inter-frequency/RAT measurements (during IDLE mode or upon IDLE to ACTIVE transition) and measurement reporting upon RRC establishment (it should be investigated whether measurements can be omitted in some or all cases, e.g., co-located cells).
2	Camp load balancing						N/A
3	Traffic load balancing	X	(X)	(X)	(X)		Redirection to a certain layer/RAT (cell) upon RRC establishment, depending on the loading of layers/RATs; Load information exchange (not needed if balancing is inadaptive, i.e., only based on subscriber penetration on each band/RAT).

4	UE capability	X	(X)		(X)		Redirection to a certain layer/RAT (cell) upon RRC establishment, depending on the UE capability.
5	HCS						N/A
6	Network sharing	(X)	(X)	(X)	(X)		Redirection to a certain layer/RAT (cell) of the preferred PLMN, upon RRC establishment.
7	Private neworks / home cells	(X)					Redirection from a certain private/home cell.
8	Subscription / Policy based mobility control	X	X	(X)	(X)	(X)	Redirection to a certain layer/RAT (cell) upon RRC establishment, depending on the subscription information (if available upon establishment) or any other operator policy.
9	Service based mobility control	X	X	(X)	(X)	(X)	Redirection to a certain layer/RAT (cell) upon RRC establishment, depending on the requested service (if the service information is available upon establishment).
10	MBMS						N/A

E.3.3 Mobility control during ACTIVE mode

This is to control the mobility of UEs during ACTIVE mode (ECM-CONNECTED or UTRAN RRC Connected), i.e., handover. Table E.3.3-1 summarises applicability of the drivers for different inter-frequency/RAT scenarios and necessary features to support the drivers.

Table E.3.3-1: Mobility control during ACTIVE (handover)

#	Drivers	Applicability					Necessary features to support drivers
		L→L	L→U	U→L	L→G	G→L	
1	Radio condition	X	X	X	X	(X)	Gap assisted inter-frequency/RAT measurements (network controlled); Measurement reporting and reporting criteria; Inter-frequency/RAT handover (UE assisted network controlled).
2	Camp load balancing						N/A
3	Traffic load balancing	X	(X)	(X)	(X)		Inter-frequency/RAT handover (network controlled); Load information exchange (not needed if balancing is inadaptive, i.e., only based on subscriber penetration on each band/RAT).
4	UE capability	(X)	(X)	(X)	(X)		Inter-frequency/RAT handover (network controlled), depending on the UE capability.
5	HCS	(X)	(X)	(X)			Mobility detection (e.g., number of crossed cells); Inter-frequency/RAT handover (network controlled), depending on the UE speed.
6	Network sharing	X	X	X	X		Inter-frequency/RAT handover (network controlled) to a cell of the appropriate PLMN at network sharing border; Mechanism to restrict UE measurements to cells that are entitled to access.
7	Private networks /home cells	X	X	X	X	X	Inter-frequency/RAT handover (network controlled) to a private/home cell on another layer/RAT, where the UE is entitled to access; Mechanism to restrict UE measurements and reselection to cells that are entitled to access; Other unidentified features, FFS.
8	Subscription / Policy based mobility control	(X)	X	X	X	X	Inter-frequency/RAT handover (network controlled), depending on the subscription information or any other operator policy.
9	Service based mobility control	(X)	X	X	X	X	Inter-frequency/RAT handover (network controlled), depending on the service or combination of services being used or requested.
10	MBMS	X	X	X			Inter-frequency/RAT handover (network

							controlled), depending on whether the UE requires reception of a certain MBMS transmission.

E.3.4 Mobility control upon ACTIVE to IDLE transition

This is to control the mobility of UEs upon ACTIVE to IDLE transition, i.e., redirection upon RRC or U-plane release. Table E.3.4-1 summarises applicability of the drivers for different inter-frequency/RAT scenarios and necessary features to support the drivers.

Table E.3.4-1: Mobility control upon ACTIVE to IDLE transition (redirection upon RRC/U-plane release)

#	Drivers	Applicability					Necessary features to support the driver
		L→L	L→U	U→L	L→G	G→L	
1	Radio condition	X	X	X	X	X	Gap assisted inter-frequency/RAT measurements (it should be investigated whether measurements can be omitted in some or all cases, e.g., co-located cells), OR Cell search upon redirection.
2	Camp load balancing	X	X	X	(X)	(X)	Redirection to a certain layer/RAT upon RRC release, depending on the loading of layers/RATs; Load information exchange (not needed if balancing is inadaptive, i.e., only based on subscriber penetration on each band/RAT).
3	Traffic load balancing						N/A
4	UE capability	X	X	X	(X)	(X)	Redirection to a certain layer/RAT upon RRC release, depending on the UE capability.
5	HCS						N/A
6	Network sharing	X	X	X	X		Redirection to a certain layer/RAT of the preferred PLMN, upon RRC release.
7	Private networks / home cells						N/A
8	Subscription / Policy based mobility control	X	X	X	(X)	(X)	Redirection to a certain layer/RAT upon RRC release, depending on the subscription information or any other operator policy.
9	Service based mobility control	(X)	(X)		(X)		Redirection (or maintaining) to a certain layer/RAT upon RRC release, depending on the service that has been used (predicting that the UE uses the same service in the future).
10	MBMS	(X)	(X)		(X)		Redirection to a certain layer/RAT upon stop of an MBMS service reception.

Annex F (informative): Mobility and Access Control Requirements associated with Closed Subscriber Group (CSG) Cells

F.1 Access Control

The following description is provided from the perspective of the Home cell deployment, and is used as an example to understand the general requirements of Closed Subscriber Group (**CSG**) Cells.

If an operator uses the 2G or 3G systems for a deployment in a home, there are some limitations imposed by mandating that only a UE from a specific User Group can access the cell. This access restriction is needed because some backhaul links for this type of deployment are not considered to provide adequate QoS to support a large numbers of UEs, or there may be regulatory issues with sharing the backhaul link/eNB access in that location, and additionally the backhaul maybe owned by the subscriber and they may not be happy to share the link with other subscribers.

In 3G, the Access Control would work based on the Location Updating or Routing Area Updating Reject for the LA or RA which is being signalled on the cell. Each unique User Group would require its Location Area ID, however the LAC of the LA ID is only 2 octets, which needs to be shared with the normal LAs of the PLMN.

There is an additional drawback with this solution in 3G, which is that all terminals would attempt to perform the Location Updating procedure on a cell advertising a LA not on the list of forbidden LAs in the UE. The network would reject the location updating procedure of those UEs which are not in the User Group associated with the LA. This would lead to the scenario in a densely populated area, where a UE moving down the street could attempt to access a home cell at each house, before being rejected causing a wastage of battery in the terminal, and unnecessary signalling/processing load in the core network.

1. **A UE should not camp on or access a CSG Cell if it is not part of the User Group which is allowed to access that CSG Cell.**

It shall be possible to update the User Group associated with a specific Home-eNB, e.g. based on request by the registered owner of the Home-eNB, under the supervision of the network operator. When a subscriber is added to the User Group for the Home-eNB, the UE of the newly added subscriber should be able to (almost) immediately camp on the cell(s) of Home-eNB and then may acquire service through the Home-eNB. This is especially important in the deployment scenario where this subscriber has no other means to access the network, i.e. there is no Macro-layer coverage available. For this it might be necessary to update the list of allowed CSG cells for a particular UE by network signalling or other means.

2. **The subscriber registered as the owner of a CSG Cell or group of Cells, under supervision of the operator, shall be able to control/modify quickly which other subscribers form part of the User Group associated with its CSG Cell(s).**

F.2 Mobility

The Home-eNB/CSG cells should form part of the network of the operator, and therefore the design needs to support mobility of UEs between the Macro-Layer network and the Home-eNB/CSG cells. In the following text, what is called Macro layer encompasses all the cells which are not from the CSG being considered i.e. it is not about their size/coverage but the fact that they are not closed.

3. **The system shall support bidirectional handover between CSG Cells and any eNodeB (E-UTRAN) or RNC (UTRAN) or BSS (GERAN) or with another CSG Cell of the same or different CSG.**

The Home-eNBs will be deployed to improve network coverage, improve network capacity as well as offer differential billing models. As the User billing could be dependent on whether the UE is using the Home-eNB, it is important that the UE when it is range of the Home-eNB automatically camps on the Home-eNB.

4. **It shall be possible to allow UEs which are allowed to access a given CSG cell, to prioritise their camping towards the CSG Cells when in coverage of the CSG cells. To achieve this it should be possible either to set the reselection parameters accordingly or other means should allow this.**

It is important that UEs camped on the Home-eNB do not cause excessive signalling load or processing load if/when the UE moves frequently between the Macro-Layer network and the Home-eNB.

5. **The system shall avoid excessive signalling and processing load from a UE frequently reselecting in LTE Idle between the CSG Cells and the non-CSG cells of eNodeB (E-UTRAN) or RNC (UTRAN) or BSS (GERAN).**

As discussed above, the Home-eNBs will have an associated User Group describing which UEs can access the Home-eNB. The handover procedures needs to take the User Group of the Target Home-eNB into account when deciding whether to handover a UE to a specific Home-eNB. The solution for the mobility to/from the Home-eNB should avoid unnecessary signalling between the RAN nodes.

6. **The handover procedures shall take into account whether a UE is part of the User Group of the target CSG Cell. The mobility procedures should allow for prioritisation of the CSG Cells in ECM-CONNECTED when the UE enters coverage of a CSG Cell and the UE is part of the User Group of this cell.**

As the number of Home-eNBs in the network will become large, the proportion of measurements made by a UE which could be wasted may become large, to the point where it affects the mobility performance of the UE/system, as well as draining the battery of the UE. It is therefore necessary for the UE to be able to avoid unnecessary measurements of Home-eNBs where the UE does not belong to the User Group of the Home-eNB.

7. **It shall be possible to minimise the quantity of measurements which UEs perform on CSG Cells, if the UE does not belong to the User Group of a specific CSG Cell.**

Due to the high number of Home-eNBs and the nature of their deployment, it would not be practical to change the configuration for the mobility procedures (measurements, handover, etc.) in the macro layer nodes when a Home-eNB is deployed/dismissed.

8. **The mobility procedures shall allow a large number of (small) CSG Cells to be deployed within the coverage of e-UTRAN, UTRAN and GERAN macro-layer cells. Deployment of (additional) CSG Cells shall not require reconfiguration of other eNodeB (E-UTRAN) or RNC (UTRAN) or BSS (GERAN).**

In order to minimise the impact on UEs not allowed to use CSG cells or not allowed to use a particular CSG cell, means shall be provided which allow the UE to either identify prior to cell reselection that the configured neighbour cell is a CSG cell or means shall be provided which do not impact the UEs on the macro cells.

9. **The mobility procedures for moving UEs to CSG cells shall minimise impact to other UEs on the same macro cells not entitled to use CSG cells or a given CSG cell.**

It is expected that the CSG identity of a Home-eNB is static and this identity can be used by the UE to clearly identify the Home-eNB. In contrast the Physical Cell Identity (PCI) of a Home-eNB might change at power up. For example, a Home-eNB may scan the neighbour environment at every switch on, and a PCI unused by the neighbours can be selected. In most cases this will end up on the same PCI being used, as the neighbour environment did not change. During operation the Home-eNB might also change the PCI on a slow basis, in case high interference is detected. If the PCI changes, mobility shall still be supported without user intervention. It might be necessary that the change is notified to the UEs belonging to the CSG through network signalling or other means.

10. **The Physical Cell Identity (PCI) of a Home-eNB might change at each power up of the Home-eNB. Although a change of PCI is expected to be infrequent, if it changes, mobility shall still be supported without user intervention.**

The carrier frequency of a Home-eNB might only be changed during Home-eNB power up, out of a preconfigured range of frequencies. Often the pre-configured frequency range would be limited to one. If the frequency is changed, mobility shall still be supported without user intervention.

11. **The carrier frequency of a Home-eNB might be changed at power up of the Home-eNB, out of a preconfigured range of frequencies. Often the preconfigured frequency range would be limited to one. Although a change of frequency is expected to be infrequent, if it changes, mobility shall still be supported without user intervention.**

F.3 Mobility performance guidelines

For outbound mobility from CSG cells to non-CSG cells, normal mobility procedures shall apply, i.e., network controlled mobility. As such, the normal mobility performance requirements as for non-CSG mobility should apply.

12. **For outbound mobility from CSG cells to non-CSG cells, both for idle and active mode mobility, the normal mobility performance requirements as for non-CSG mobility shall apply.**

For inbound mobility to CSG cells in active mode, it is important that the overall handover time perceived by the user, i.e., from the time the user arrives at home till the UE is connected to the CSG cell, is sufficiently short, considering that different charging policies may be applicable to CSG. However, this should not cause severe impacts on the battery consumption. It is thought that the time taken depends largely on UE implementation of the autonomous CSG search, as it is expected that the UE will apply means to reduce battery consumption in verifying the location (to trigger CSG search, based e.g., on "fingerprint"). However, this factor is thought to be existent only in the case the CSG cell is deployed on a different frequency as the serving cell, as for intra-frequency case the UE should be able to detect the CSG cell naturally through normal intra-frequency cell search. Therefore, in case of intra-frequency mobility, the handover should be completed in the order of 1 s. In case of inter-frequency mobility, 10-30 s is expected including the autonomous CSG search time.

13. **For inbound mobility to CSG cells in active mode, the cell search, CSG identification, and handover process shall be completed in the order of 1 s in case of intra-frequency mobility. In case of inter-frequency mobility, 10-30 s is expected including the autonomous CSG search time.**

For inbound mobility to CSG cells in idle mode, in case of intra-frequency mobility, the same requirements as for non-CSG reselection should apply also to inbound reselection to CSG cells. For inter-frequency mobility, the inbound mobility is not as time critical. However, considering applicability of different tariffs and CSG/ Home-eNB identifiers to be displayed on the terminal screen, it is desirable that the UE camps on the suitable CSG cell without excessive delay. It is desirable that inbound cell reselection is possible within 20-60 s. If UE battery consumption becomes a critical issue, this requirement can be revisited.

14. **For inbound mobility to CSG cells in idle mode, cell reselection shall be completed as for normal non-CSG reselection in case of intra-frequency mobility. In case of inter-frequency mobility, it is desirable that inbound cell reselection is possible within 20-60 s.**

If the PCI or the carrier frequency of the CSG cell changes, the UE shall be able to detect this change autonomously. It is expected that the UE would look for the CSG cell based on the PCI/ carrier frequency as last stored in its memory and based on the fingerprint. Then, the UE would detect absense of the CSG cell from where it was expected, and initiate a full scan of the CSG cell. By checking the global cell identity of detected CSG cells, the UE should eventually find the CSG cell on a new PCI or carrier frequency. Such autonomous procedure shall be completed within [6 min, FFS]. Once the CSG cell has been found, the requirements 12 and 13 shall apply then on.

15. **If the PCI or the carrier frequency of the CSG cell changes, the UE shall be able to detect this change within [6 min, FFS]. The performance requirements 11 and 12 shall apply then on.**

Annex G (informative): Guideline for E-UTRAN UE capabilities

Each radio access technology has defined specific "classes" of terminals in terms of radio capabilities. E.g. in GPRS the "multislot classes" are defined, in UMTS R'99 different dedicated bearer classes are defined and for HSDPA and HSUPA 12 respectively 6 physical layer categories are defined. The definition of UMTS R'99 UE classes lead to 7 DL classes and 7 UL classes for FDD out of which only 2 DL and 3 UL classes were commercially realized. Furthermore the lower end classes (e.g. 64 UL and 64 DL) disappeared from the market with commercialization of the UMTS networks quite soon. Besides these class definitions a huge number of possible parameter combinations (to achieve certain data rates) exist with UMTS R'99 which lead to the huge number of RAB and RB combinations defined. Further activities in the early phase of UMTS standardization aimed to reduce the number of possible combinations significantly.

For HSDPA two "simple" DL categories (11 & 12) with lowered complexity were defined with the intent to speed up commercialization of HSDPA. Originally those categories should have been removed for Rel-6. Out of the 12 defined categories only approx. 4 will be realized in commercial HSDPA platform products. A similar situation is likely for HSUPA as well as for the combinations of HSDPA/HSUPA.

Generally the aim to mandate certain essential functions/requirements can help to simplify the system definition as well as the realization options (e.g. mandating 20 MHz of DL reception as well as 20 MHz UL transmission bandwidth significantly reduced the E-UTRAN system complexity). Especially mandating certain terminal functions could be useful for the system design if a defined subset of parameter combinations are also supported by the systems, e.g. the eNB scheduler. However, there is also a risk that not all the defined E-UTRA features are deployed in the networks at the time when terminals are made commercially available on the market place. Some features are likely to be rather large and complex, which further increases the risk of interoperability problems unless these features have undergone sufficient interoperability testing (IOT) on real network equipment, and preferably with more than one network in order to improve the confidence of the UE implementation. Thus, avoiding unnecessary UE mandatory features but instead defining a limited set of UE radio classes allows simplification for the interoperability testing.

Given the discussion above, it seems beneficial for the introduction of E-UTRAN to limit the combination of radio capabilities to a clearly defined subset and ensure that a given set of parameters is supported by certain UE classes as well as networks for rapid E-UTRAN deployment. It seems unrealistic to mandate only one single UE class which always mandates the maximum capability.

In order to address the different market requirements (low end, medium and high end), the definition of the following UE classes are proposed:

Table G-1: E-UTRAN UE Classes

Class	UL	DL
A	[50] Mbps	[100] Mbps
B	[25] Mbps	[50] Mbps
C	[2] Mbps	[2] Mbps

NOTE: For simplification reasons, the table only depict the UE capabilities in terms of uplink and downlink peak data rates supported. However, it should be noted that further discussion on other features is expected once the work progresses.

It may require further discussion whether there be a need for an additional terminal class between 2 Mbps and 50 Mbps classes. It might make sense, since up to 5 MHz band allocations may be rather common in real deployments for several years. This would point to bit rate class of 25 Mbps in DL and 10 Mbps in UL.

The above given data rates are indicative and should be subject for further discussions in 3GPP RAN working groups. Depending on the different solutions to reach those data rates, the target should be to define [3..4] UE classes in different data rate ranges, and other parameters affecting device complexity and cost. The definition of the required parameters/features is for further study for each of the classes. For instance, half-duplex UEs form a specific category that may be frequency band specific.

NOTE: the support of half-duplex UEs is mandatory for the eNB where such a category is allowed in the frequency band supported by the eNB.

The aim is to ensure on the one hand that high end E-UTRAN UEs, supporting data rates representing state of the art level and competitive with other radio technologies are defined, while the medium and lower data rates aim to reduce implementation cost for chipset/terminal vendors and allow adoption of most cost efficient solutions for different market segments. It is expected that the support of the high end data rate terminals is ensured from the very beginning.

Another clear exception from this exercise is that on the low end very cheap product implementation is possible (e.g. for the machine-to-machine market or the voice and very low data rate only segment – to substitute GSM in the medium term) while top end performance is needed for data applications in notebooks, wireless gateways ("wireless DSL"), etc.

Another important aspect that must be ensured is that a higher capability UE can be treated in exactly the same way as for a lower capability UE, if the network wishes to do so, e.g., in case the network does not support some higher capability features. In HSDPA, there has been problems in this respect due to 2-stage rate matching in HARQ. Such problems should be avoided in E-UTRAN, and E-UTRAN UE capabilities should provide the compatibility to ease implementation and interoperability testing.

Annex H (informative): PDCCH, PHICH and PUCCH Performance

The target qualities on PDCCH, PHICH and PUCCH of E-UTRAN are summarized respectively in the two tables below:

Table H-1: PDCCH and PHICH

Event	Target quality
DL scheduling information miss detection	(10^{-2})
UL scheduling grant miss detection	(10^{-2})
NACK to ACK error (for UL-SCH)	(10^{-4} – 10^{-3})
ACK to NACK error (for UL-SCH)	(10^{-4} – 10^{-3})

Table H-2: PUCCH

Event	Target quality
ACK miss detection (for DL-SCH)	(10^{-2})
DTX to ACK error (for DL-SCH)	(10^{-2} – 10^{-1})
NACK to ACK error (for DL-SCH)	(10^{-4} – 10^{-3})
CQI block error rate	FFS (10^{-2} – 10^{-1})

Annex I (informative): Change history

Change history (before approval)							
Date	**TSG #**	**TSG Doc.**	**CR**	**Rev**	**Subject/Comment**	**Old**	**New**
2006-06	RAN2 Ad.	R2-062020			First version.		0.0.0
2006-06	RAN2 Ad.	R2-062026			RLC operation clarified; High priority and low priority SRBs listed in RRC; New section on RRC procedures; Organisation of paging groups explained; New section on Support for self-configuration and self-optimisation.	0.0.0	0.0.1
2006-06	RAN2 Ad.	R2-062036			Four possible types of allocation added to section 11; New section for the support for real time IMS services.	0.0.1	0.0.2
2006-08	RAN2#54	R2-062206			Annex B on RRC and MAC control added. Minor editorial clarifications.	0.0.2	0.0.3
2006-09	RAN#34	RP-060603			Section 4 on “Overall Architecture” reorganised; Details on RLC operation included (segmentation, PDU size); Overview of System Information and RACH procedure added.	0.0.3	0.0.4
2006-10	RAN2#55	R2-063012			Ciphering for RRC signalling required in eNB as agreed in SA3; Agreements on RLC operation included: concatenation, discard, polling and status reports; Agreed text proposal in R3-061428 on Self Configuration added to section 19; Context transfer of header compression at UPE relocation listed as FFS. Outline of the RACH procedure described.	0.0.4	0.0.5
2006-10	RAN2#55	R2-063039			Miscellaneous editorial corrections; Agreed text proposal R3-061606 on Current status of E-UTRAN Architecture description added to section 4; Agreed text proposal in R3-061613 on Support for self-configuration and self-optimisation added to section 19. Agreed Physical layer model R2-063031 added to section 5	0.0.5	0.1.0
2006-11	RAN2#56	R2-063656			Annex C on system information classification added (R2-063064); Integrity protection for the control plane only (SA3 agreement); Agreements on PDCP and RLC PDU structure/handling reflected; Decisions on mobility aspects such as load balancing, handover, radio link failure and random access procedure added; Agreed MBMS deployment scenarios listed together with MBMS transmissions and principles from 25.813; Agreed text proposal R3-061936 on Radio Resource Management added to section 15; Agreed text proposal R3-061940 on RAN Sharing added to section 10; Agreed text proposal R3-061943 on Roaming/Area Restrictions in SAE/LTE added to section 10; Agreed text proposal R3-062008 on S1 C-Plane Functions and procedures added to section 18; Agreed text proposal R3-062011 on X2 interface added to section 19.	0.1.0	0.2.0
2006-11	RAN2#56	R2-063680			Incorporation of RAN1 agreement regarding the mandatory support of 20Mhz DL bandwidth for UEs i.e. removal of sub-clause 16.1; Editorial corrections.	0.2.0	0.3.0
2006-11	RAN2#56	R2-063681			Removal of the SA3 agreement on integrity protection for the user plane; Addition of Annex D on MBMS Transmission; Editorial corrections.	0.3.0	0.3.1
2006-11	RAN#34	RP-060806			Clean version	0.3.1	0.3.1
2007-01	RAN2#56 bis	R2-070403			SA3 agreement on integrity protection for the user plane included (R2-070016); Annex E on drivers for mobility control added (R2-070276); Agreements on the details of the random access procedure added in section 10.1.5 (R2-070365); New section on UL rate control included (R2-070410); RRC security principles listed in section 13.1 (R2-070044); Agreement on MAC security added to section 13 (R2-062100); Basis for DL scheduling put in section 11.1; Assumptions on neighbour cell list included in section 10.	0.3.1	0.4.0
2007-02	RAN2#57	R2-070451			Number of bits for RACH in TDD clarified; Miscellaneous editorial corrections.	0.4.0	0.5.0

2007-02	RAN2#57	R2-071073			Architecture updated according to R3-070397; Agreements from R2-070802.	0.5.0	0.6.0
2007-02	RAN2#57	R2-071120			RACH model for initial access described; Mapping of the BCCH and System Information principles added; Agreements on DRX included in section 12.	0.6.0	0.7.0
2007-02	RAN2#57	R2-071122			Miscellaneous clarifications	0.7.0	0.7.1
2007-02	RAN2#57	R2-071123			CCCH in DL listed as FFS; SAE Gateway ID removed from section 8.2; PDCP for the control plane listed as FFS in section 4.3.2; Agreements on intra-E-UTRAN handover procedure included in section 10.1.2 (R3-062020).	0.7.1	0.8.0
2007-03	RAN2#57	R2-071124			Agreement on Radio Access Network Sharing (R2-070551) added to section 10.1.7; Overview of the physical layer (R1-071251) included to section 5; Agreed text proposals on *S1 interface* included in Section 19 (R3-070289, R3-070402); Agreed text proposal R3-070409 on *network sharing* included in section 10.1.7; Agreed text proposal R3-070411 on *Area Restrictions* included in section 10.4; Agreed text proposal R3-070448 on *Assembly of Intra-E-UTRAN handover command* included in section 10.1.2.1.1; Agreed text proposal R3-070451 on *inter RAT HO principles* included in section 10.2.2; Agreed text proposal R3-070472 on *Addressing on S1-C and X2-C* added to sections 19.2 and 20.2; Agreed text proposal R3-070494 on *Initial Context Setup Function and Procedure* added to section 19; Agreed text proposal R3-070495 on *S1 Paging function and procedure* added to section 19 Figures for mapping between channels split into Uplink and Downlink parts in section 5.3.1 and 6.1.3.	0.8.0	0.9.0
2007-03	RAN#35	RP-070136			S1-U and S1-MME used throughout the document; aGW replaced by EPC when still used; Clean version for information	0.9.0	1.0.0

Change history (after approval)							
Date	**TSG #**	**TSG Doc.**	**CR**	**Rev**	**Subject/Comment**	**Old**	**New**
2007-03	RP-35	RP-070136	-		Approved at TSG-RAN #35 and placed under Change Control	1.0.0	8.0.0
2007-06	RP-36	RP-070399	0001	1	Changes to management-, handover-, paging- and NAS functions, node- synchronization, X2 UP protocol stack, X2 inter cell load management, IP fragmentation, intra-LTE HO, and TA relation to cells in eNB	8.0.0	8.1.0
	RP-36	RP-070494	0002	1	Update on Mobility, Security, Random Access Procedure, etc…	8.0.0	8.1.0
	RP-36	RP-070399	0003	-	Update on MBMS	8.0.0	8.1.0
2007-09	RP-37	RP-070637	0004	1	Update on Security, System Information, Mobility, MBMS and DRX	8.1.0	8.2.0
	RP-37	RP-070637	0005	1	Correction of synchronization, handover, trace, eMBMS architecture, and S1 common functions and procedures	8.1.0	8.2.0
2007-12	RP-38	RP-070913	0006	1	Clean up and update on security, scheduling, mobility, MBMS and DRX	8.2.0	8.3.0
	RP-38	RP-070913	0007	-	Mobility management	8.2.0	8.3.0
	RP-38	RP-070913	0008	-	Correction of eMBMS functions and NAS handling during X2 handover	8.2.0	8.3.0
	RP-38	RP-071048	0009	-	Update of Stage 2 to incorporate Interworking with cdma2000	8.2.0	8.3.0
2008-03	RP-39	RP-080192	0010	-	CR to 36.300 on NAS States, Persistent Scheduling, C-RNTI Allocation at Handover…	8.3.0	8.4.0
	RP-39	RP-080192	0011	-	RAN3 corrections to 36.300 (CR0011)	8.3.0	8.4.0
2008-05	RP-40	RP-080406	0012	1	Introduction of optimized FS2 for TDD	8.4.0	8.5.0
	RP-40	RP-080406	0013	1	System Information, Mobilty, QoS and miscellaneous updates	8.4.0	8.5.0
	RP-40	RP-080406	0014	-	Updates to Stage 2 based on Stage 3 progress on CDMA inter-working	8.4.0	8.5.0
	RP-40	RP-080406	0016	1	CR 0016r1 to 36.300 on CSG mobility performance guidelines	8.4.0	8.5.0
	RP-40	RP-080406	0017	-	CR to 36.300 on AS-NAS interaction	8.4.0	8.5.0
	RP-40	RP-080420	0018	1	RAN3 agreed changes to TS 36.300	8.4.0	8.5.0
	RP-40	RP-080463	0019	-	Network Interface for ETWS support based on CBS solution	8.4.0	8.5.0
2008-09	RP-41	RP-080688	0020	-	Correction for Rename of L1/L2 control channel	8.5.0	8.6.0
	RP-41	RP-080688	0021	-	CR to 36.300 on Paging Channel Description	8.5.0	8.6.0
	RP-41	RP-080688	0022	-	Proposed updates to Stage 2 for CDMA2000 handover	8.5.0	8.6.0
	RP-41	RP-080688	0023	-	CR to 36.300 on Semi-Persistent Scheduling	8.5.0	8.6.0
	RP-41	RP-080688	0024	-	CR to 36.300 on System Information	8.5.0	8.6.0
	RP-41	RP-080688	0026	-	Clarification of PDCCH description	8.5.0	8.6.0

	RP-41	RP-080688	0027	-	Removal of DRX interval threshold in 36.300	8.5.0	8.6.0
	RP-41	RP-080688	0028	-	CR on Randon Access procedure	8.5.0	8.6.0
	RP-41	RP-080688	0032	1	Transport of NAS messages by AS during Handover	8.5.0	8.6.0
	RP-41	RP-080688	0034	-	CR to 36.300 capturing home eNB conclusions of RAN2 #63	8.5.0	8.6.0
	RP-41	RP-080688	0035	-	Changes to TS36.300 agreed in RAN3#61	8.5.0	8.6.0
2008-12	RP-42	RP-081016	0036	-	CR0036 to 36.300 [Rel-8] on Contention Resolution	8.6.0	8.7.0
	RP-42	RP-081016	0037	-	CR0037 to 36.300 [Rel-8] on ETWS SIB	8.6.0	8.7.0
	RP-42	RP-081016	0038	-	Alignment of 36.300 with stage 3 on 1xRTT CSfallback	8.6.0	8.7.0
	RP-42	RP-081016	0039	1	Data handling in UE during Inter-RAT mobility	8.6.0	8.7.0
	RP-42	RP-081016	0040	-	Removing of end time for dedicated preamble	8.6.0	8.7.0
	RP-42	RP-081016	0041	-	Remove the Note about RA preamble for FS2	8.6.0	8.7.0
	RP-42	RP-081016	0042	-	Clarification of AS-NAS concatenation - Stage 2	8.6.0	8.7.0
	RP-42	RP-081016	0044	-	CR 0044 to 36.300 on Miscellaneous corrections	8.6.0	8.7.0
	RP-42	RP-081016	0046	1	Proposed CR to 36.300 [Rel-8] on Security Overview	8.6.0	8.7.0
	RP-42	RP-081016	0047	-	Proposed CR to 36.300 [Rel-8] on MBMS	8.6.0	8.7.0
	RP-42	RP-081016	0050	-	PDCP reordering function removal	8.6.0	8.7.0
	RP-42	RP-081016	0052	-	Align Number of Cell Identities	8.6.0	8.7.0
	RP-42	RP-081016	0055	2	Periodic Updates In Connected Mode DRX	8.6.0	8.7.0
	RP-42	RP-081016	0056	-	Cleaning of the figure w.r.t Handover Control Plane - CR to TS 36.300	8.6.0	8.7.0
	RP-42	RP-081016	0057	-	CR to 36.300 to capture measurement model for EUTRAN	8.6.0	8.7.0
	RP-42	RP-081016	0058	2	CSG Mobility Updates from RAN2 #63bis and RAN2 #64	8.6.0	8.7.0
	RP-42	RP-081016	0059	-	CR to 36.300 on Correction of the Description of FS2	8.6.0	8.7.0
	RP-42	RP-081016	0060	-	Changes to TS36.300 agreed in RAN3#61bis and RAN3#62	8.6.0	8.7.0
2009-03	RP-43	RP-090123	0061	1	CR to 36.300 - Clarification on RAPreambles	8.7.0	8.8.0
	RP-43	RP-090123	0062	-	CR to 36.300 on E-UTRAN Identities	8.7.0	8.8.0
	RP-43	RP-090123	0063	1	CR to 36.300 - MME in temporary UE identity	8.7.0	8.8.0
	RP-43	RP-090123	0064	-	UE with SIM in EUTRA	8.7.0	8.8.0
	RP-43	RP-090123	0065	-	Collected 36.300 corrections	8.7.0	8.8.0
	RP-43	RP-090123	0066	-	CR for 36.300 on Local NACK feature	8.7.0	8.8.0
	RP-43	RP-090123	0067	-	CR for allowed CSG list	8.7.0	8.8.0
	RP-43	RP-090123	0068	3	UE capability transfer upon handover to E-UTRA	8.7.0	8.8.0
	RP-43	RP-090123	0069	1	Inter-RAT ANR Function for CDMA2000	8.7.0	8.8.0
	RP-43	RP-090123	0070	-	Corrections to Handover Scenario	8.7.0	8.8.0
	RP-43	RP-090123	0071	-	Corrections to Security for alignment with 33.401	8.7.0	8.8.0
	RP-43	RP-090134	0072	-	Establishment of X2 Interface to HeNB GW	8.7.0	8.8.0
	RP-43	RP-090134	0073	-	Clarification of PLMN id to be used in E-CGI and Global eNB ID	8.7.0	8.8.0
	RP-43	RP-090134	0074	-	Specification of UL PDUs handling	8.7.0	8.8.0
	RP-43	RP-090134	0075	-	Update of AMBR Concept with UE-AMBR and APN-AMBR	8.7.0	8.8.0
	RP-43	RP-090134	0076	-	Aligning E-RAB release request procedure with E-RAB release indication in 36.413	8.7.0	8.8.0
	RP-43	RP-090134	0077	-	Stage 2 CR on S1 CDMA2000 Tunnelling Function	8.7.0	8.8.0
	RP-43	RP-090134	0078	-	Finalisation of dynamic configuration of the X2 and S1 interfaces	8.7.0	8.8.0
	RP-43	RP-090134	0079	-	Addition and correction of X2 procedures in stage 2 specification	8.7.0	8.8.0
	RP-43	RP-090134	0080	-	NNSF Description	8.7.0	8.8.0
	RP-43	RP-090134	0081	-	Collection of minor corrections to 36.300 agreed by RAN3	8.7.0	8.8.0
	RP-43	RP-090134	0082	-	Data Forwarding Resource Release	8.7.0	8.8.0
	RP-43	RP-090134	0083	-	Support of Paging Optimisation for CSG cells	8.7.0	8.8.0
	RP-43	RP-090134	0084	-	Handling of trace session and location reporting during UE context release	8.7.0	8.8.0
2009-06	RP-44	RP-090507	0085	-	Proposed CR to 36.300 on RLC status report triggers	8.8.0	8.9.0
	RP-44	RP-090507	0086	2	Updates on UE capability transfer and container handling for E-UTRA	8.8.0	8.9.0
	RP-44	RP-090507	0089	-	Proposed CR to 36.300 Rel-8 on FFS and outdated statements	8.8.0	8.9.0
	RP-44	RP-090508	0096	-	Removal of no longer necessary notes	8.8.0	8.9.0
	RP-44	RP-090508	0097	-	Introduction of support for Cell traffic trace	8.8.0	8.9.0
	RP-44	RP-090508	0098	-	Correction the text about the UE History Information	8.8.0	8.9.0
	RP-44	RP-090538	0102	-	Configuration transfer	8.8.0	8.9.0