US005217119A

United States Patent [19]

Hollingsworth

[11] **Patent Number: 5,217,119**

[45] **Date of Patent: Jun. 8, 1993**

[54] **CARRYING CASE FOR LAPTOP COMPUTER**

[76] Inventor: **Dale Hollingsworth**, 742 Ridgefield Rd., Wilton, Conn. 06897

[21] Appl. No.: **894,381**

[22] Filed: **Jun. 4, 1992**

[51] **Int. Cl.**[5] **B65D 81/02**; B65D 85/00; A45C 3/02

[52] **U.S. Cl.** **206/583**; 206/320; 190/102; 190/103; 190/127; 190/111; 190/115; 190/902

[58] **Field of Search** 190/102, 103, 127, 111, 190/115, 902; 206/583, 806, 320

[56] **References Cited**

U.S. PATENT DOCUMENTS

3,853,220 12/1974 Luray ..... 206/583 X
4,013,170 3/1977 Hutterer ..... 206/583 X
4,837,590 6/1989 Sprague ..... 206/320 X
4,919,240 4/1990 Tobias 190/103
5,010,988 4/1991 Brown ..... 206/320 X
5,105,920 4/1992 Grebenstein ..... 190/111 X
5,160,001 11/1992 Marceau 190/102

Primary Examiner—William I. Price

[57] **ABSTRACT**

An improved carrying case for a laptop computer or other delicate electronic instrument is generally rectangular, having front and rear walls. A suspension system for the laptop computer or other equipment includes a cradle suspended from the front and rear walls for receiving a laptop computer, and elastic panel members supporting the cradle for absorbing shocks and impacts occurring upon placing of the case on a floor or the like.

24 Claims, 3 Drawing Sheets

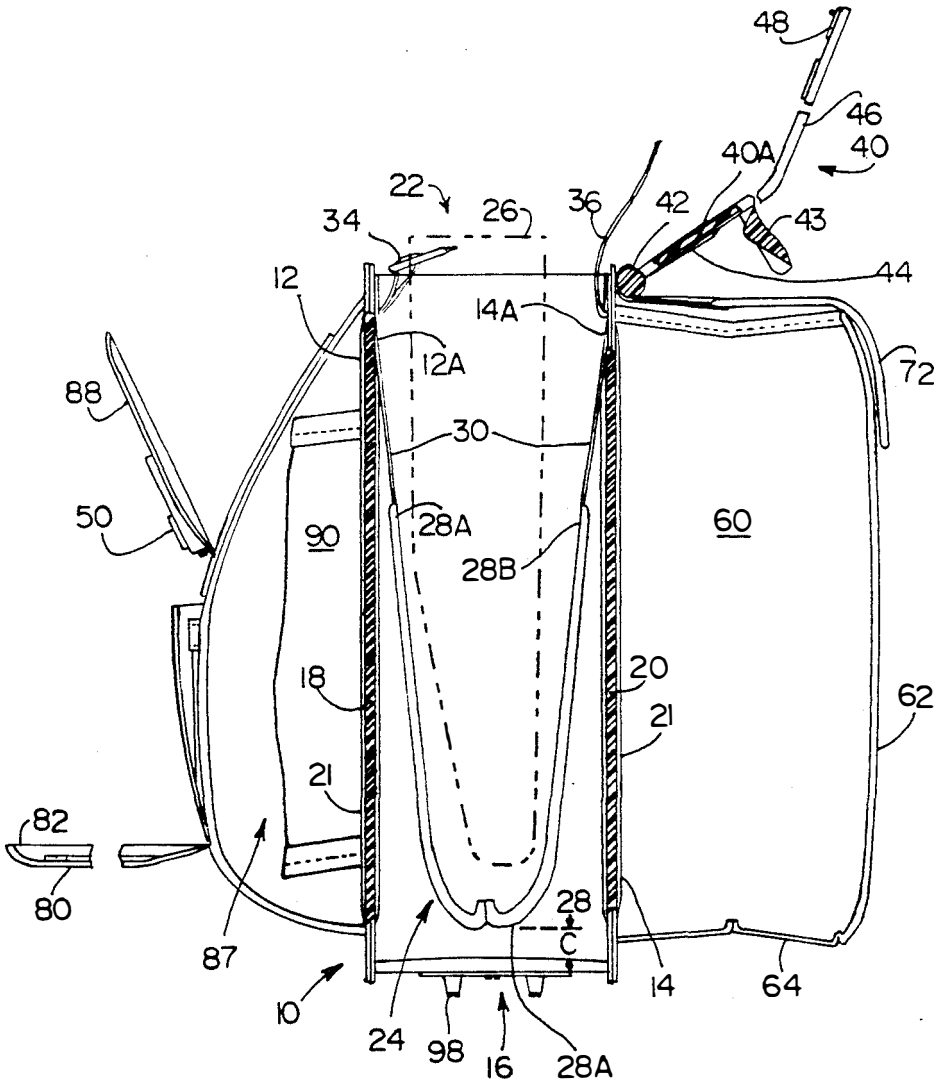

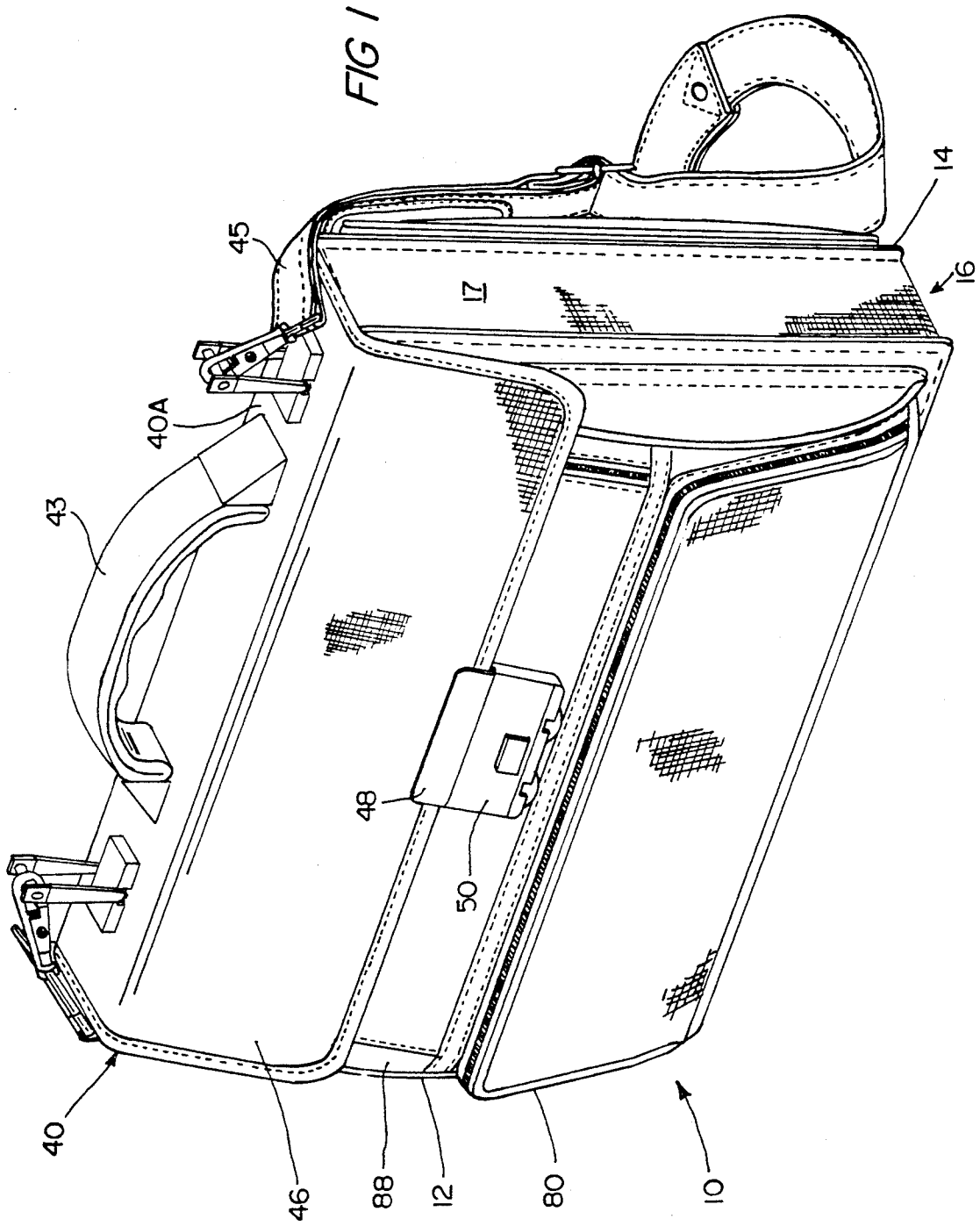
FIG 1
14
16
17
45
40A
43
48
50
40
46
88
12
80
10

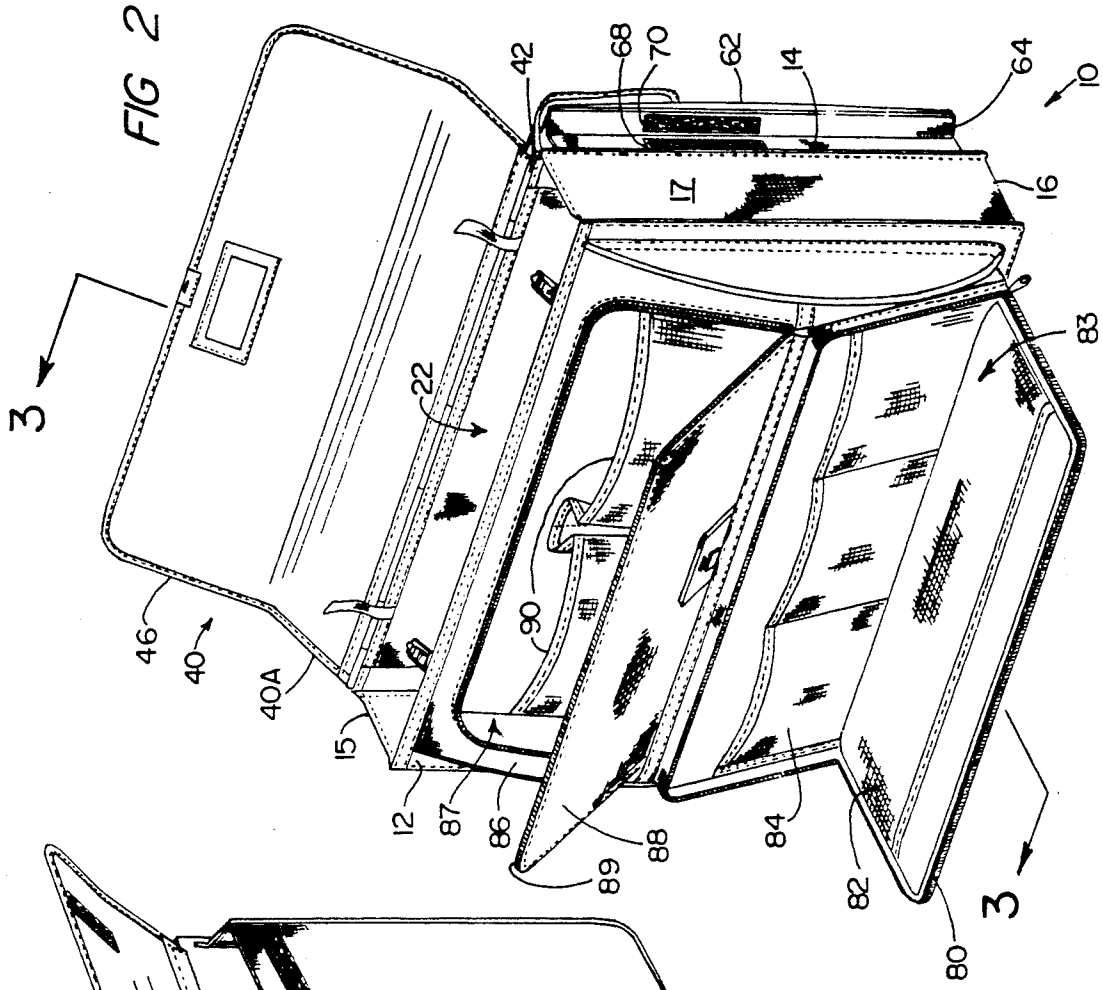
3
42
68
70
62
14
64
10
16
17
83
22
90
46
40
40A
15
12
87
86
88
89
84
82
80
3

FIG 2

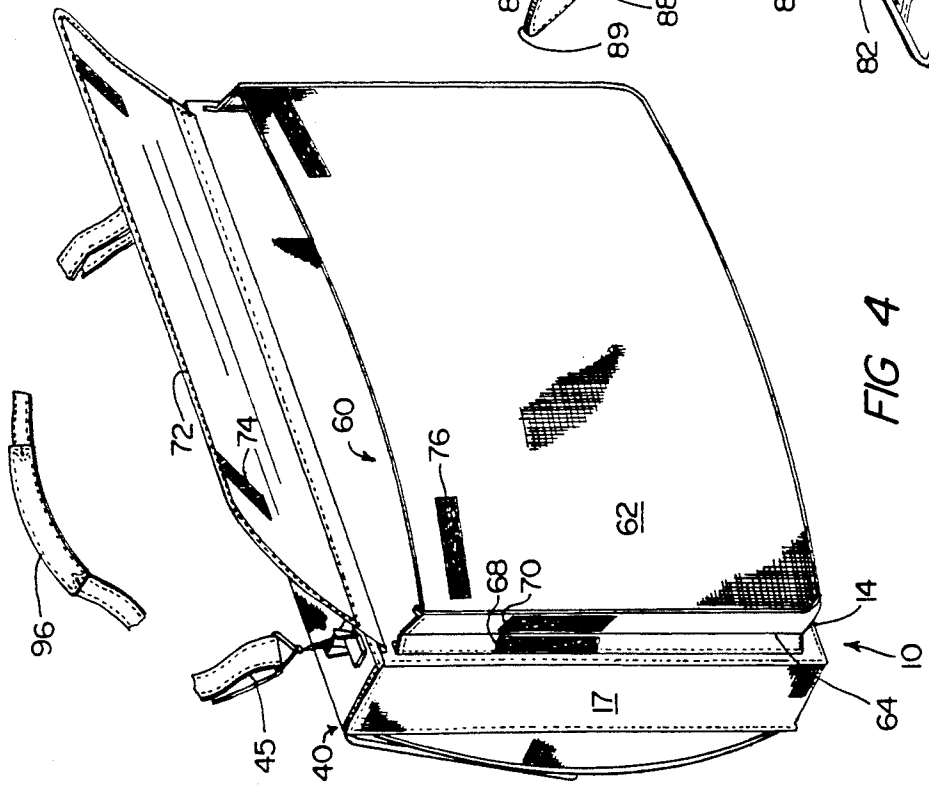
72
74
60
76
62
68
70
14
10
64
17
96
45
40

FIG 4

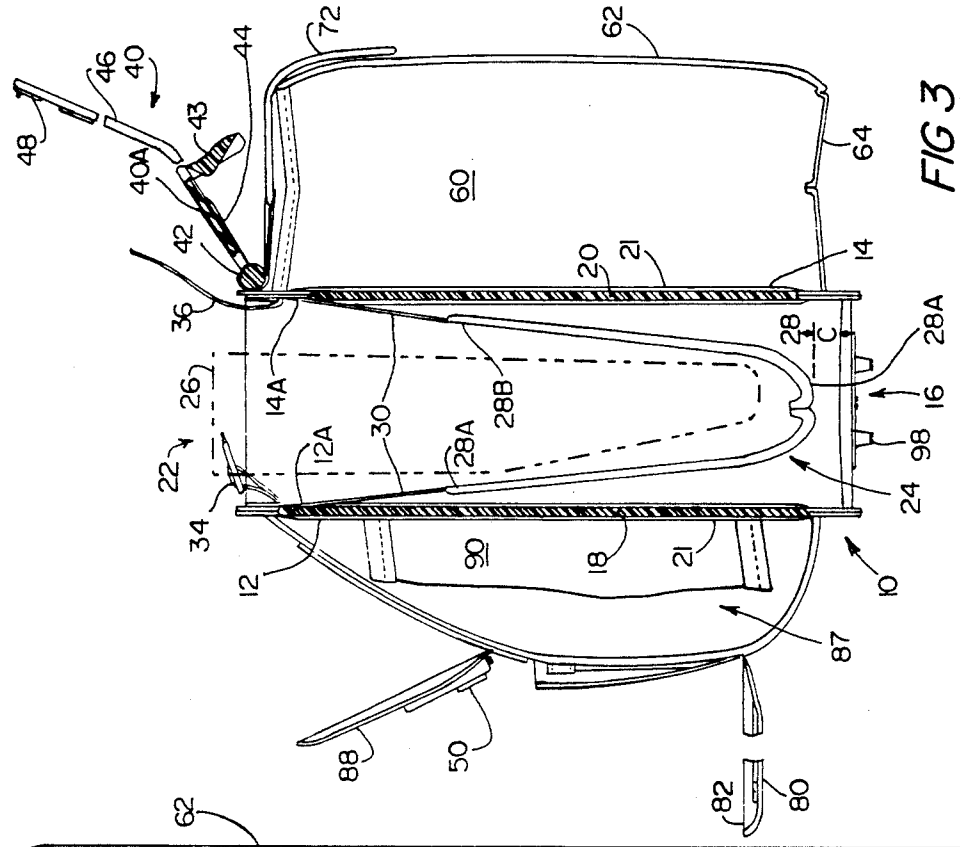
48
46
40
40A
43
44
72
62
64
60
42
36
20
21
14
14A
28
C
28A
16
26
30
28B
22
12A
28A
98
34
24
12
90
18
21
10
87
88
50
82
80

FIG 3

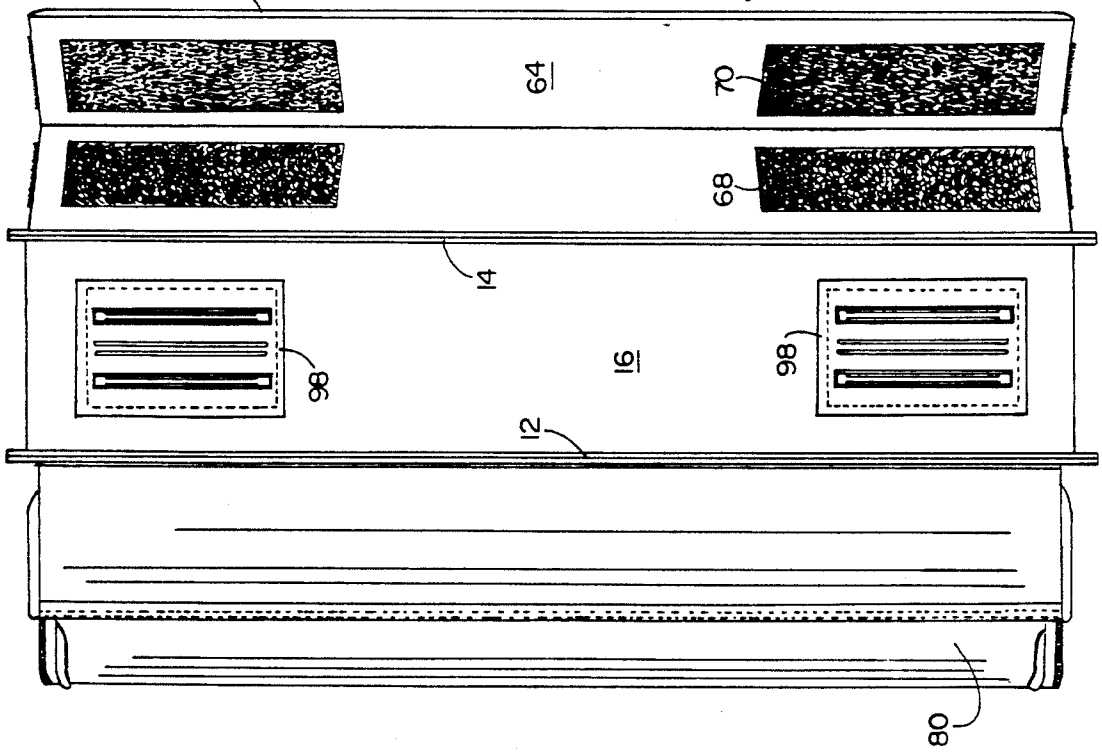
62
64
70
68
14
98
16
98
12
80

FIG 5

CARRYING CASE FOR LAPTOP COMPUTER

BACKGROUND OF THE INVENTION

1. Field of the Invention

This invention relates to a carrying case for a laptop computer or other delicate electronic instrument. More particularly, this invention relates to a carrying case providing very secure carriage of a delicate laptop computer as well as convenient storage for floppy disks, peripherals and other equipment, while not being excessively bulky or heavy.

2. Description of the Prior Art

Recent years have seen a proliferation of so-called "laptop" computers, that is, personal computers so reduced in size and weight as to be conveniently carried and employed while traveling or the like. The art has not provided a suitable carrying case for such laptop computers. A suitable carrying case for a laptop computer would provide substantial protection against: impact and shock, as might commonly occur if the computer in its case were dropped on the floor from a typical carrying height; impacts against sharp corners of furniture or the like; and damage due to rough handling by the owner, e.g., placing the case on a baggage rack or the like. Such a carrying case for a laptop computer would also desirably include a number of small pockets, compartments or the like for storing floppy disks, printouts and other documents such as owner's manuals, as well as other equipment such as modems, portable printers, connecting cables and the like. Similar considerations apply to the provision of suitable carrying cases for other sorts of electronic equipment and associated items, such as portable compact disc players and the associated discs, or video cameras and associated microphones, tapes and the like. Such a case should also not be excessively costly, heavy, or bulky. Further, it would be desirable that such a case provide a neat and professional appearance whether relatively full, that is, having each of its compartments full of equipment or the like, or relatively empty.

OBJECTS AND SUMMARY OF THE INVENTION

Accordingly, it is an object of the invention to provide an improved carrying case for a laptop computer or other delicate electronic instrument protecting the equipment from substantial shock, impact, and the like, while also providing convenient storage for documents and various other items, but without incurring excessive penalties as to weight, cost, or bulk.

These and other objects of the invention which will be apparent from the discussion below are satisfied by the carrying case according to the present invention wherein a carrying case for a laptop computer or the like comprises a bottom, front and rear walls, left and right side walls, and a top. The top is hinged to the rear wall and has a flap depending over the front wall. A latch secures the flap to the front wall, thus securely closing a principal compartment for receiving a laptop computer or other electronic equipment. A suspension system for supporting the laptop computer is mounted within the principal compartment. The suspension system comprises a U-shaped padded fabric cradle section connected on either side to the upper inner surfaces of the front and rear walls by elastic panels. The elastic of the panels is such that the lowermost surface of a typical laptop computer is supported well above the inner floor of the bottom of the carrying case under normal circumstances. Accordingly, if the carrying case is dropped onto its bottom surface, as might occur upon its being set down hurriedly, the elastic allows the laptop computer to slowly decelerate to a stop, rather than violently impacting the floor of the carrying case; that is, the elastic panels stretch to absorb the kinetic energy of the falling laptop computer.

The front and rear walls of the carrying case according to the invention comprise padded stiffener members. The stiffener members give the case its basic shape, support the suspension system, ensure that the case sits upright on its bottom whether laden or empty, and provide protection to the laptop computer against sidewise impacts, punctures or the like. Additional auxiliary compartments may be provided for convenient storage and carrying of various items.

BRIEF DESCRIPTION OF THE DRAWINGS

The invention will be better understood if reference is made to the accompanying drawings, wherein like reference numerals in the various figures are employed to designate like components, and wherein:

FIG. **1** is a perspective view of the carrying case of the invention from its front right three-quarter view, with the compartments of the case closed;

FIG. **2** is a view comparable to that of FIG. **1**, but with several of the compartments of the carrying case of the invention open;

FIG. **3** is a view in section taken along lines **3**—**3** of FIG. **2**;

FIG. **4** is a rear perspective three-quarter view of the carrying case of the invention, again showing several of the compartments of the case open; and

FIG. **5** is a bottom view in plan of the carrying case of the invention.

DESCRIPTION OF THE PREFERRED EMBODIMENTS

Referring to FIGS. **1**-**5** in greater detail, the carrying case **10** according to the invention includes a front wall **12**, a rear wall **14**, a bottom surface **16**, left and right side walls **15** and **17** respectively, and a top **40**. Front and rear walls **12** and **14**, left and right walls **15** and **17**, bottom **16**, and top **40** together define a principal compartment **22** for receiving a laptop computer **26**, shown in phantom in FIG. **3**, or another delicate electronic device.

As more particularly shown in the cross-sectional view of FIG. **3**, front and rear walls **12** and **14** include impact-resistant stiffening panels **18** and **20**, respectively. Stiffeners **18** and **20** ensure that the carrying case **10** retains its shape and provide support for a suspension system **24** for a laptop computer **26**, as discussed below. Stiffeners **18** and **20** may be formed of relatively stiff, tough plastic such as "ABS", may be padded, and are preferably encased by the case fabric material as indicated generally at **21**. Such fabric material forms the principal visible surfaces of the carrying case **10** of the invention.

A suspension system **24** for a laptop computer **26** (or other electronic equipment) depends from the upper portions **12***a* and **14***a* of the inner surfaces of front and rear walls **12** and **14**, respectively. The suspension system **24** comprises a U-shaped cradle **28**, typically a relatively flexible member formed of padded cloth, and two panels **30** of resilient material, preferably a knitted

fabric comprising elastic fibers or strands. That is, the elastic panels are of suitable rubberized fabric material as used throughout the garment and luggage industries. Elastic panels **30** are sewn or otherwise joined to cradle **28** at upper edges **28***a* and **28***b* thereof. Elastic panels **30** are then adhesively bonded and/or stitched or otherwise joined to upper portions **12***a* and **14***a* of inner surfaces of the front and rear walls of carrying case **10** of the invention.

The tensile characteristics and the dimensions of elastic panels **30** are chosen so that the lowermost surface or edge of a typical laptop computer **26** disposed in cradle **28** is normally space above the inner surface of the bottom **16** of case **10**. That is, elastic panels **30** are chosen such that the weight of a typical laptop computer **26** disposed in cradle **28** is insufficient to stretch elastic panels **30** to the point that the lower surface **28***a* of the cradle contacts the inner floor surface of bottom **16** of carrying case **10** under normal circumstances. Preferably a clearance C of at least about one inch remains when a laptop computer **26** of typical weight is placed in cradle **28**. In this way, if carrying case **10** with laptop computer **26** therein is set down roughly, as might typically occur during travel, elastic panels **30** are capable of stretching to absorb the shock and impact otherwise experienced by the laptop computer. That is, when the carrying case according to the invention is set down rapidly, its motion is brought abruptly to a stop when its bottom surface **16** meets a flat floor or the like. If the laptop computer were similarly abruptly stopped, sudden dissipation of its kinetic energy might cause damage to its disc drives and other delicate components. By instead supporting the laptop computer **26** on a suspension member **24** including resilient elastic panels **30**, with a space provided between the suspension member and the floor of compartment **22**, the elastic panels can stretch as needed to absorb the kinetic energy of the laptop computer **26**, thereby cushioning it, and absorbing any shock which would otherwise occur due to the carrying case being abruptly set down.

The weight of laptop computer **26** in its cradle **28** is borne by front and rear walls **12** and **14**. In order that walls **12** and **14** may withstand the loads occurring when the case is set down, in the preferred embodiment they are strengthened by stiffening panels **18** and **20**. Stiffening panels **18** and **20** in the front and rear walls **12** and **14** further protect laptop computer **26** against localized impacts from the corners of furniture, sharp instruments, or the like.

A pair of mating strap members **34** and **36** secure the laptop computer **26** within suspension member **24**.

As shown in FIGS. **1**, **2** and **3**, the principal compartment **22** of the carrying case according to the invention is completed by end walls **15** and **17** and by a top **40**. Preferably top **40** is hinged by a rigid hinge **42** to the upper edge of rear wall **14**. When top **40** is closed, a horizontal portion **40***a* of top **40** extends between the front and rear walls. Portion **40***a* is reinforced as indicated generally at **44**, providing a secure mounting structure for handle **43** and shoulder strap **45**. Top **40** further comprises a flap portion **46**, depending downwardly over the front wall **12** of the case in the closed position shown in FIG. **1**. Mating latch members **48** and **50** on the flap **46** and the front of case **10** respectively secure top **40** closed.

As discussed above, it is an object of the invention to provide a carrying case for a laptop computer also providing convenient storage for papers, manuals and other useful peripherals such as modems, portable printers and the like. To this end, a large auxiliary compartment **60** is formed by a panel **62** attached to the rear wall **14** of carrying case **10** by means of a creased band **64** of fabric extending around the sides and bottom of the auxiliary compartment **60**. In order that panel **62** can be retained neatly and compactly against back wall **14** of the carrying case while not being used, opposed strips of cooperating hook and loop material **68** and **70** are provided on opposed faces of the creased band of fabric. When compartment **60** is substantially empty, cooperating hook and loop strips **68** and **70** may be employed to secure panel **62** against rear wall **14** in a neat and compact arrangement.

The top of rear compartment **60** is closed by a flap **72** secured to panel **62** by further strips **74** and **76** of hook and loop material. As shown in FIG. **4**, cooperating strips **74** on flap **72** and strips **76** on panel **62** may be arranged orthogonal to one another so as to render their relative alignment less critical.

Additional compartments may be formed on the front panel of the carrying case of the invention; for example, a large compartment **87** may be formed by a panel **86** on front wall **12** of case **10**. Access to compartment **87** may be by way of a flap **88** closed by a zipper **89**. Mesh pockets **90** may be provided in compartment **87** for the convenient storage of various and sundry items. A lower compartment **83** may be defined by a further flap **80** on the lower portion of panel **86**. Compartment **83** may include a number of pockets **82** and **84** of various sizes formed by sewing mesh material to the surfaces of panel **86** and flap **80** within compartment **83**.

As mentioned, a handle **43** and a shoulder strap **45** may both be secured to reinforced section **40***a* of top **40**. Preferably, as shown in FIG. **4**, a shoulder-engaging member **96** is provided between the ends of the shoulder strap **45**. Member **96** may be of generally arcuate configuration when lying in the same plane as the strap **94**, ensuring that member **96** will conform to the user's shoulder for convenient carrying of case **10**. Member **96** may have a surface of a wear-resistant suede-like anti-slip material.

As shown in FIG. **5**, bottom **16** of carrying case **10** may include feet **98** to ensure that the lowermost edges of front and rear walls **12** and **14** are not abraded by wear on floors and the like, preserving the neat and attractive appearance of the carrying case **10** of the invention.

The construction of carrying case **10** of the invention is generally conventional where not indicated differently above. In general the various compartments and panels are formed of suitable synthetic nylon fabrics or other durable materials, reinforced by stiffeners **18** and **20** in front and rear panels **12** and **14**, and by stiffener **44** in horizontal portion **40***a* of top **40**. The components of case **10** may be assembled by sewing, by adhesives, by both, or by other known techniques.

Inasmuch as the present invention is subject to many variations, modifications and changes in detail, it is intended that all subject matter discussed above or shown in the accompanying drawings be interpreted as illustrative only and not be taken in a limiting sense.

What is claimed is:

1. A carrying case for electronic equipment such as a laptop computer, comprising:

a substantially flat elongated bottom adapted to rest on a flat floor or the like and having front and rear edges;

left and right side walls extending upwardly from respective ends of said flat bottom;

front and rear walls extending upwardly from lower edges juxtaposed to said front and rear edges, respectively, of said flat bottom, said front and rear wall each having an upper edge;

a top adapted to extend forwardly from said upper edge of said rear wall to meet said upper edge of said front wall,

whereby said bottom, left and right side walls, front and rear walls, and top define a principal compartment for receiving a laptop computer; and

a suspension member affixed to upper portions of said front and rear walls and depending downwardly therefrom within said principal compartment, said suspension member comprising a cradle for receiving said electronic equipment and resilient support means providing a shock-absorbing, weight-bearing connection between said cradle and said upper portions of said front and rear walls.

2. The carrying case of claim **1**, wherein said cradle of said suspension member comprises a padded panel of a flexible fabric material.

3. The carrying case of claim **2**, wherein said resilient support means comprises at least one panel of elastic fabric joined at opposite edges thereof to said cradle and to the upper portion of an inner surface of the corresponding one of said front and rear walls.

4. The carrying case of claim **1**, wherein said front and rear walls are substantially planar and comprise planar stiffening and impact resistant members.

5. The carrying case of claim **4**, wherein said stiffening and impact resistant members are encased by fabric.

6. The carrying case of claim **1**, wherein said top is hinged to the upper edge of said rear wall and is releasably latched to said front wall.

7. The carrying case of claim **6**, wherein said top comprises an upper section and a flap section, said flap section being flexibly joined to said upper section so as to depend over said front wall when said top is latched to said front wall.

8. The carrying case of claim **7**, further comprising cooperating latch elements fixed to said flap section of said top and to said front wall.

9. The carrying case of claim **7**, wherein said upper section of said top comprises a stiffening member, and further comprising means for carrying said carrying case affixed to said stiffening member.

10. The carrying case of claim **9**, wherein said means for carrying comprises one or both of a handle and a shoulder strap.

11. The carrying case of claim **10**, wherein said means for carrying comprises a shoulder strap including an anti-slip shoulder-engagement member.

12. The carrying case of claim **11**, wherein said shoulder-engagement member is flexible, defines an arcuate shape when planar, and comprises first and second ends at which said member is joined to first and second end sections of said shoulder strap.

13. The carrying case of claim **1**, further comprising one or more releasable strap members extending transversely between said upper edges of said front and rear walls to retain a laptop computer in said cradle.

14. The carrying case of claim **1**, further comprising means defining a further compartment on the outer surface of at least one of said front and rear walls.

15. The carrying case of claim **14**, wherein said means defining a further compartment comprises a panel of substantially similar extent as said rear wall, said panel being joined to said rear wall by means permitting said panel to be spaced away from said rear wall, and means releasably retaining said panel in juxtaposition to said rear wall.

16. The carrying case of claim **15**, wherein said means for releasably retaining said panel in juxtaposition to said rear wall comprises cooperating strips of hook-and-loop fastener material.

17. The carrying case of claim **16**, wherein said means joining said panel to said rear wall and permitting said panel to be spaced away from said rear wall comprises one or more V-creased fabric strip members forming side walls and a bottom of said further compartment.

18. The carrying case of claim **17**, wherein said V-creased side and bottom members are of substantially continuous width, whereby said panel may be spaced away from while remaining substantially parallel to said rear wall.

19. The carrying case of claim **17**, wherein said cooperating strips of hook and loop fastener material are disposed on opposed mating surfaces of said V-creased side and bottom members.

20. The carrying case of claim **15**, further comprising a flap fixed to an upper portion of an outer surface of said rear wall for depending over and closing an opening at the top of said further compartment.

21. The carrying case of claim **20**, further comprising cooperating strips of hook and loop material on said flap and said panel for releasably securing said flap over and closing the opening of said further compartment.

22. The carrying case of claim **21**, wherein said cooperating strips of hook and loop material on said flap and said panel are orthogonal to one another.

23. The carrying case of claim **1**, further comprising one or more additional compartments formed on the outer surface of said front wall.

24. The carrying case of claim **23**, further comprising internal pockets in one or more of said one or more additional compartments.

* * * * *