US 20130308608A1

(19) United States

(12) Patent Application Publication

HU et al.

(10) Pub. No.: US 2013/0308608 A1

(43) Pub. Date: Nov. 21, 2013

(54) **ANTENNA SWITCHING DEVICES, METHODS, AND SYSTEMS FOR SIMULTANEOUS COMMUNICATION**

(71) Applicant: **QUALCOMM INCORPORATED**, San Diego, CA (US)

(72) Inventors: **Jun HU**, San Diego, CA (US); **Rashid Ahmed Akbar Attar**, San Diego, CA (US); **Gregory Robert Lie**, San Diego, CA (US); **Daniel Fred Filipovic**, Solana Beach, CA (US); **Hongbo Yan**, Vista, CA (US); **Ning He**, San Diego, CA (US)

(73) Assignee: **QUALCOMM Incorporated**, San Diego, CA (US)

(21) Appl. No.: **13/838,248**

(22) Filed: **Mar. 15, 2013**

Related U.S. Application Data

(60) Provisional application No. 61/649,704, filed on May 21, 2012, provisional application No. 61/716,582, filed on Oct. 21, 2012, provisional application No. 61/734,276, filed on Dec. 6, 2012, provisional application No. 61/737,715, filed on Dec. 14, 2012, provisional application No. 61/716,586, filed on Oct. 21, 2012, provisional application No. 61/716,599, filed on Oct. 21, 2012, provisional application No. 61/716,902, filed on Oct. 22, 2012, provisional application No. 61/736,541, filed on Dec. 12, 2012.

Publication Classification

(51) **Int. Cl.**
H04W 36/30 (2006.01)

(52) **U.S. Cl.**
CPC *H04W 36/30* (2013.01)
USPC **370/334**

(57) **ABSTRACT**

This disclosure provides systems, methods, and apparatus for antenna switching for simultaneous communication. One apparatus embodiment includes a plurality of antennas including a first antenna, a second antenna, and a third antenna. The wireless communication apparatus further includes a plurality of receive circuits including a first receive circuit, at least two of the plurality of receive circuits each configured to simultaneously receive, with respect to the other, wireless communications from a different one of at least two networks relating to different radio access technologies. The wireless communication apparatus further includes a controller configured to selectively switch the first receive circuit from receiving wireless communications via the first antenna to receive wireless communications via the second antenna based on one or more performance characteristics of at least one of the first antenna and the second antenna. Other aspects, embodiments, and features are also claimed and described.

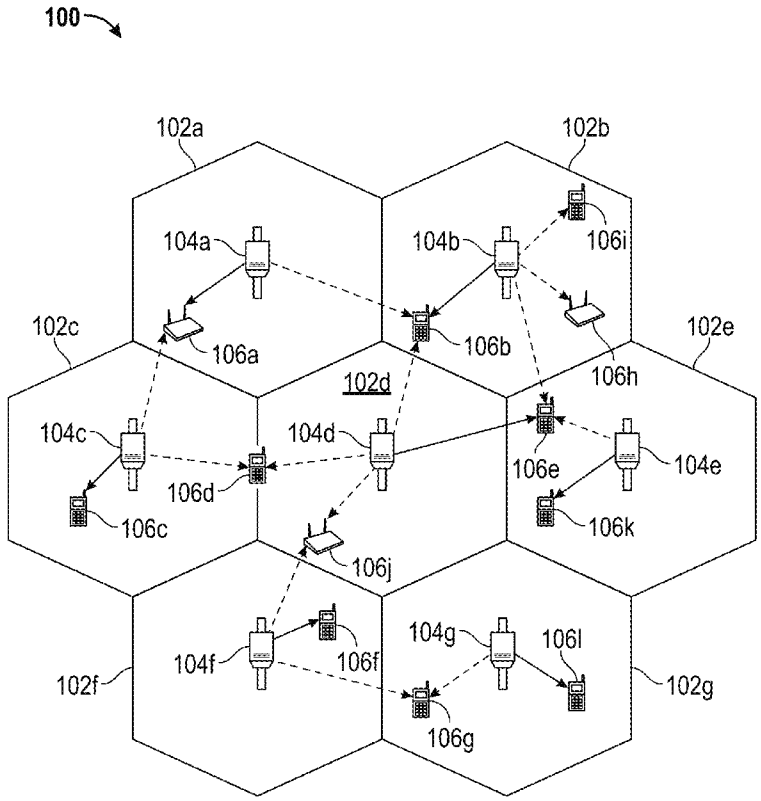

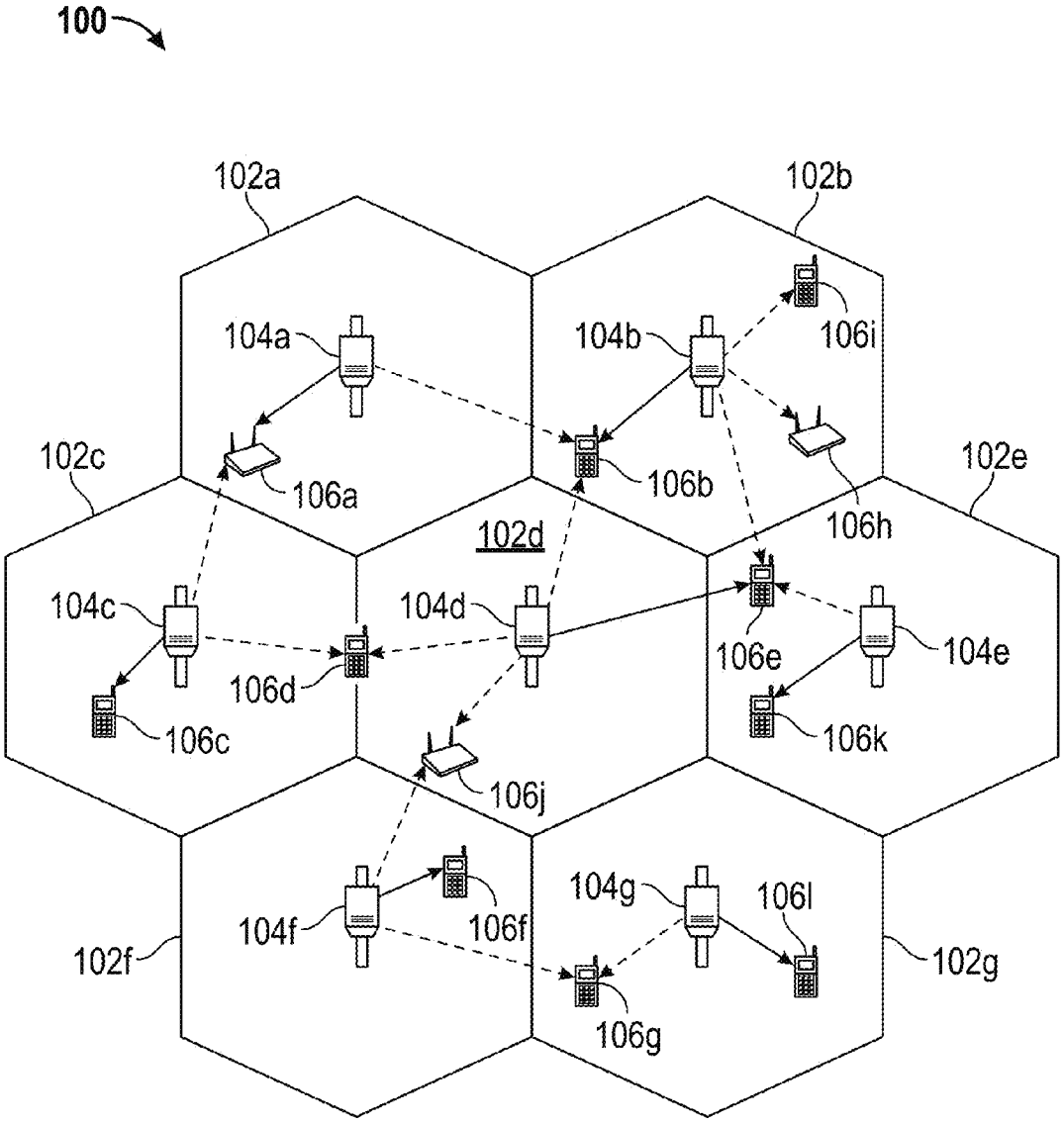
100
102a
102b
102c
102d
102e
102f
102g
104a
104b
104c
104d
104e
104f
104g
106a
106b
106c
106d
106e
106f
106g
106h
106i
106j
106k
106l

FIG. 1

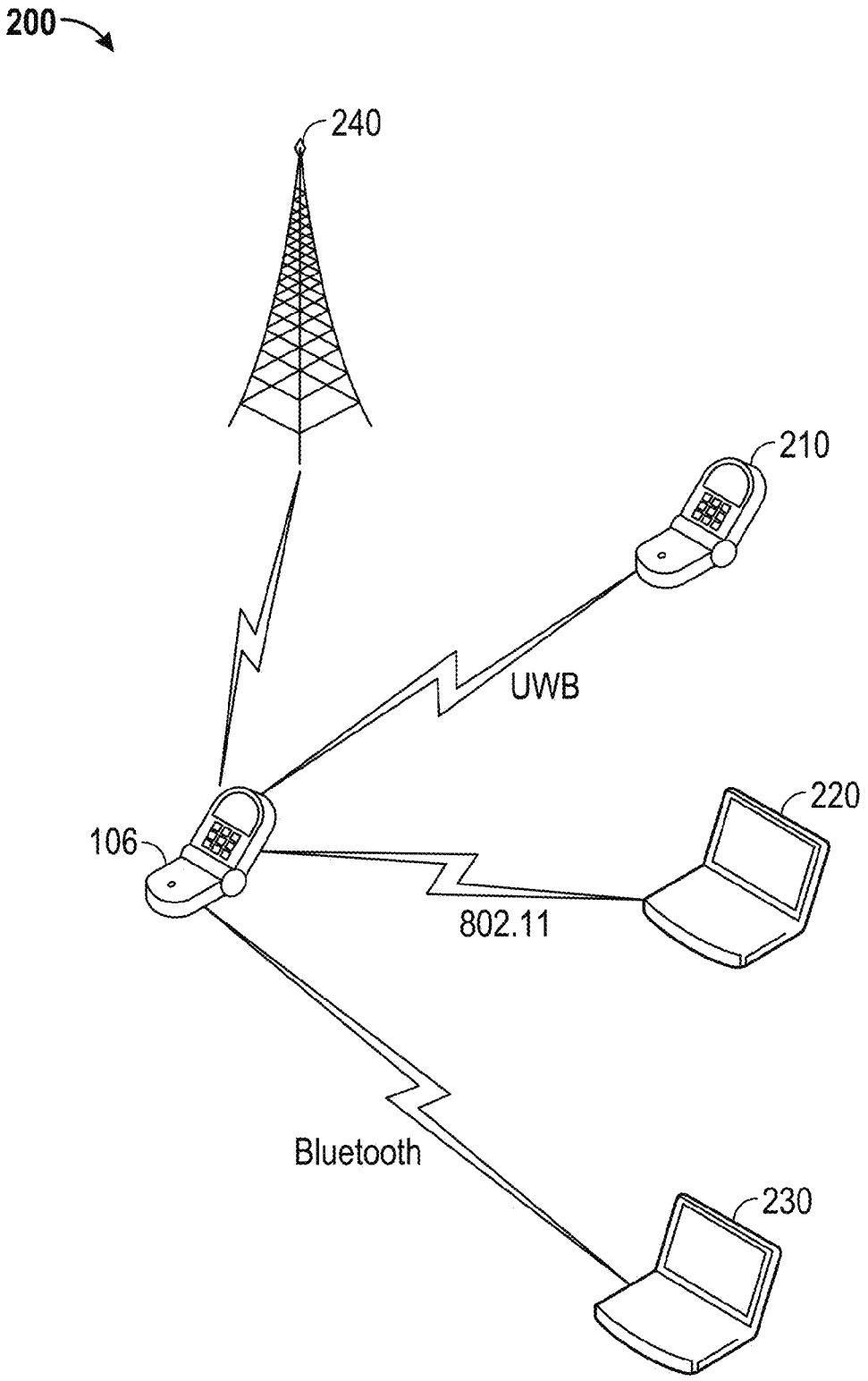

FIG. 2

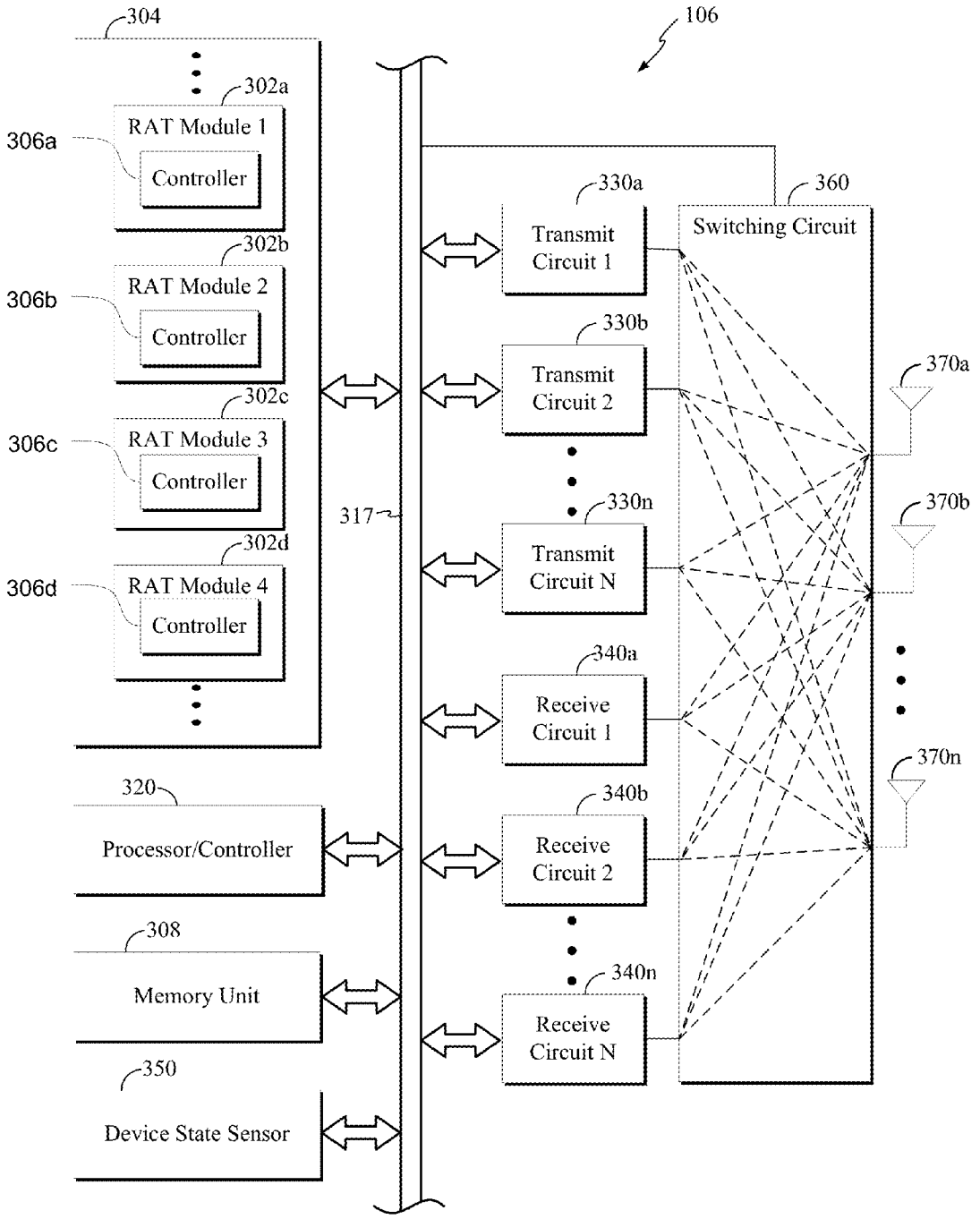
304
106
302a
RAT Module 1
306a
Controller
302b
RAT Module 2
306b
Controller
302c
RAT Module 3
306c
Controller
302d
RAT Module 4
306d
Controller
317
330a
Transmit Circuit 1
330b
Transmit Circuit 2
330n
Transmit Circuit N
340a
Receive Circuit 1
340b
Receive Circuit 2
340n
Receive Circuit N
360
Switching Circuit
370a
370b
370n
320
Processor/Controller
308
Memory Unit
350
Device State Sensor

FIG. 3

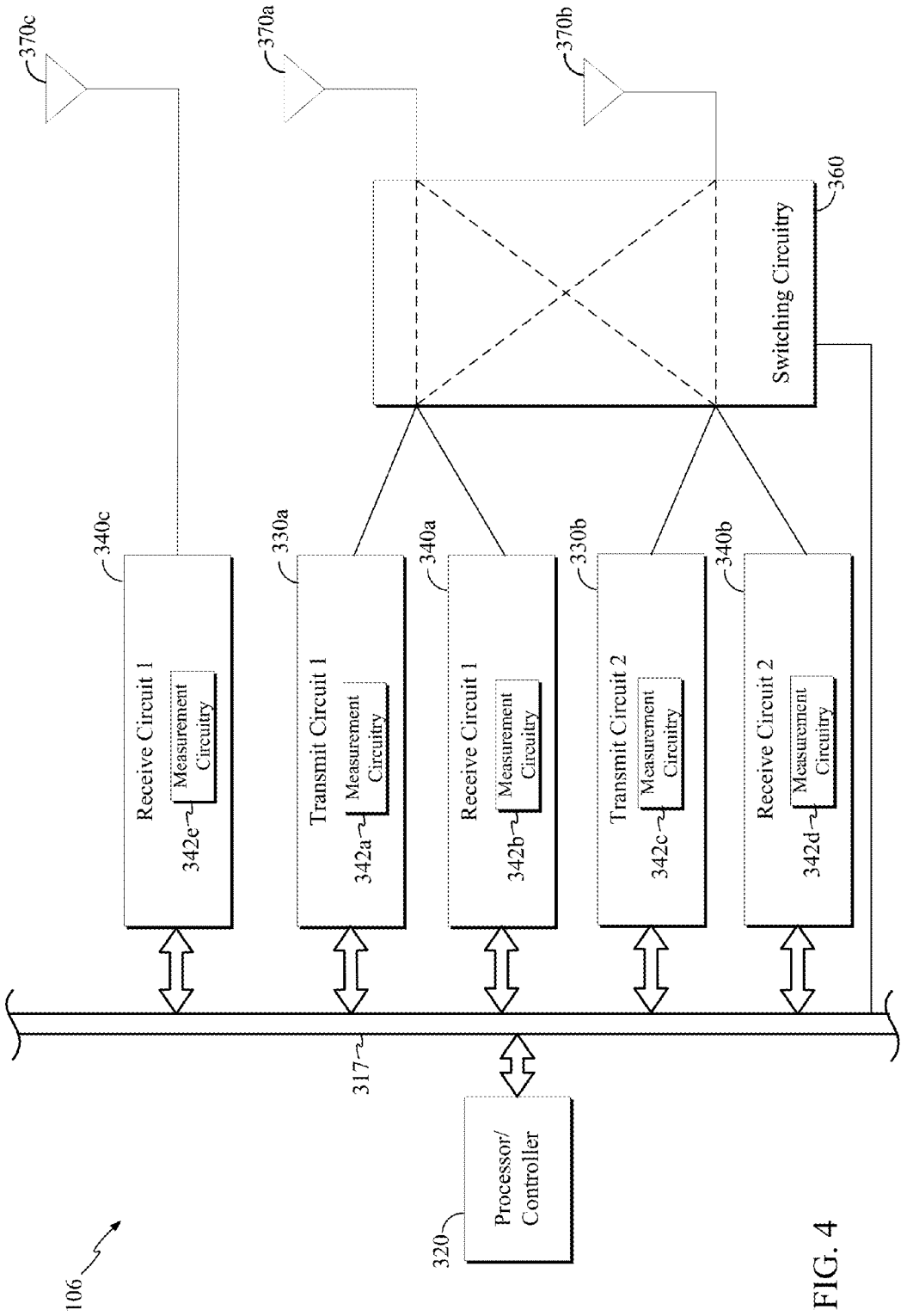
370c
370a
370b
360
Switching Circuitry
340c
330a
340a
330b
340b
Receive Circuit 1
Measurement Circuitry
342e
Transmit Circuit 1
Measurement Circuitry
342a
Receive Circuit 1
Measurement Circuitry
342b
Transmit Circuit 2
Measurement Circuitry
342c
Receive Circuit 2
Measurement Circuitry
342d
317
Processor/ Controller
320
106

FIG. 4

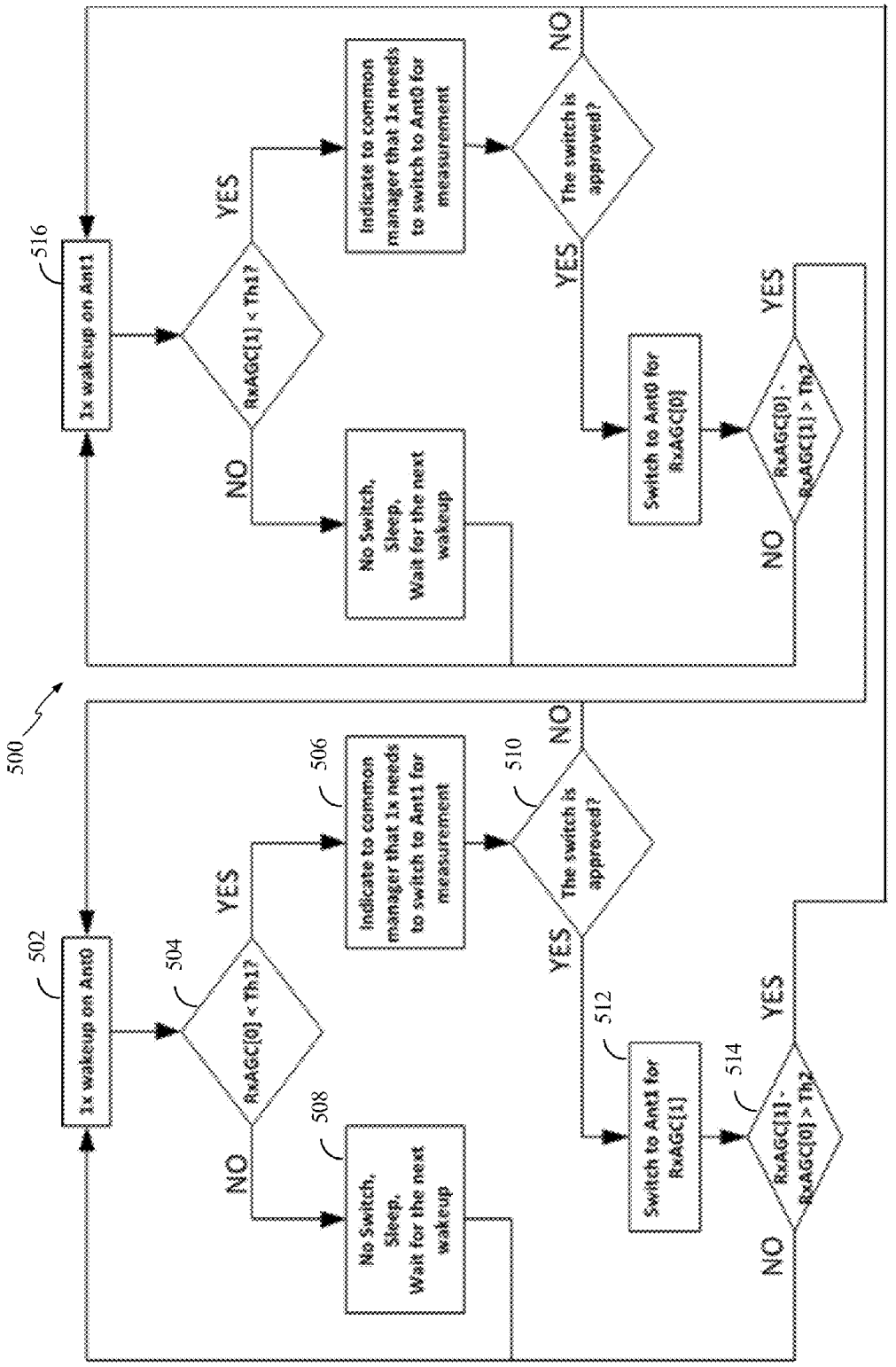
500
502
1x wakeup on Ant0
504
RxAGC[0] < Th1?
YES
NO
506
Indicate to common manager that 1x needs to switch to Ant1 for measurement
508
No Switch, Sleep, Wait for the next wakeup
510
The switch is approved?
YES
NO
512
Switch to Ant1 for RxAGC[1]
514
RxAGC[1] - RxAGC[0] > Th2
YES
NO
516
1x wakeup on Ant1
RxAGC[1] < Th1?
YES
NO
Indicate to common manager that 1x needs to switch to Ant0 for measurement
No Switch, Sleep, Wait for the next wakeup
The switch is approved?
YES
NO
Switch to Ant0 for RxAGC[0]
RxAGC[0] - RxAGC[1] > Th2
YES
NO

FIG. 5

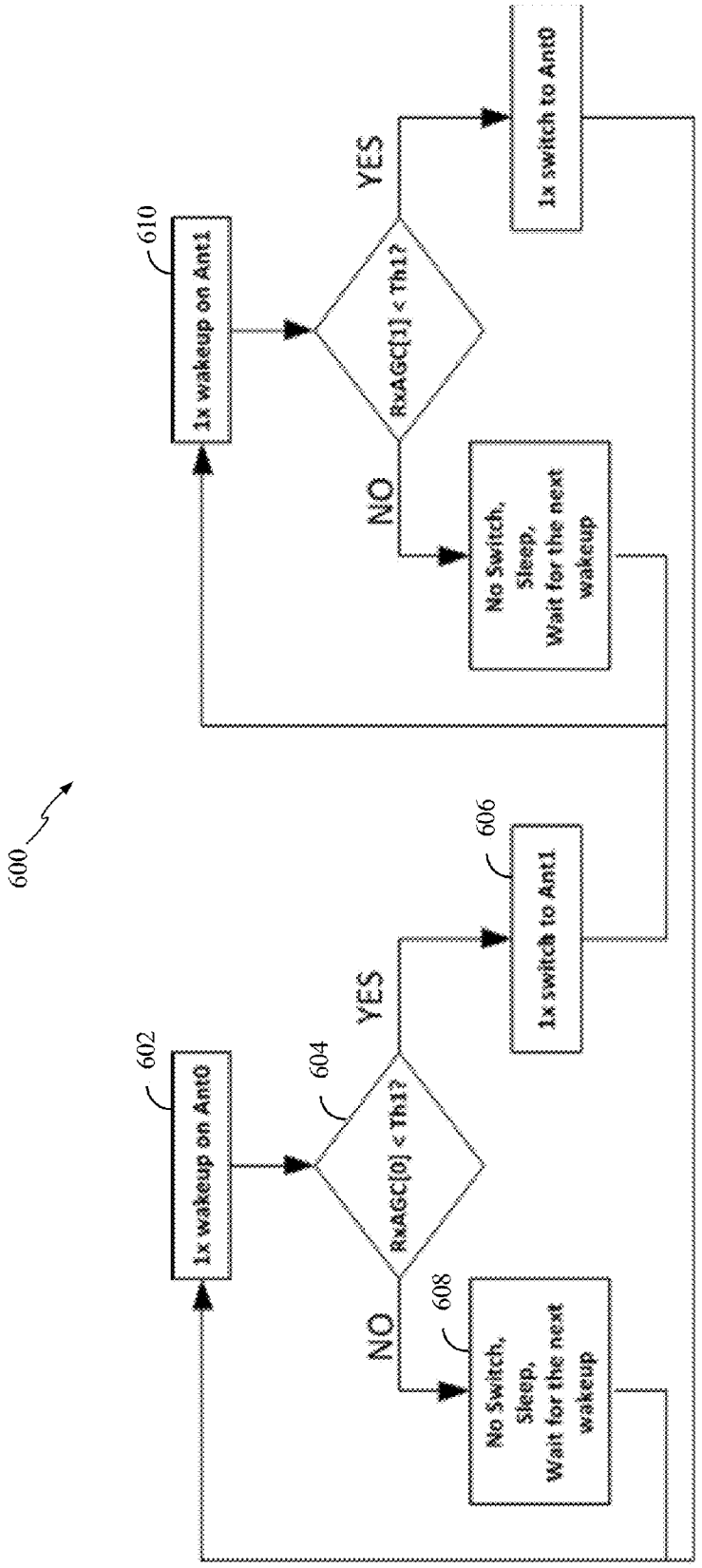
600
602
1x wakeup on Ant0
604
RxAGC[0] < Th1?
YES
NO
606
1x switch to Ant1
608
No Switch,
Sleep,
Wait for the next
wakeup
610
1x wakeup on Ant1
RxAGC[1] < Th1?
YES
NO
1x switch to Ant0
No Switch,
Sleep,
Wait for the next
wakeup

FIG. 6

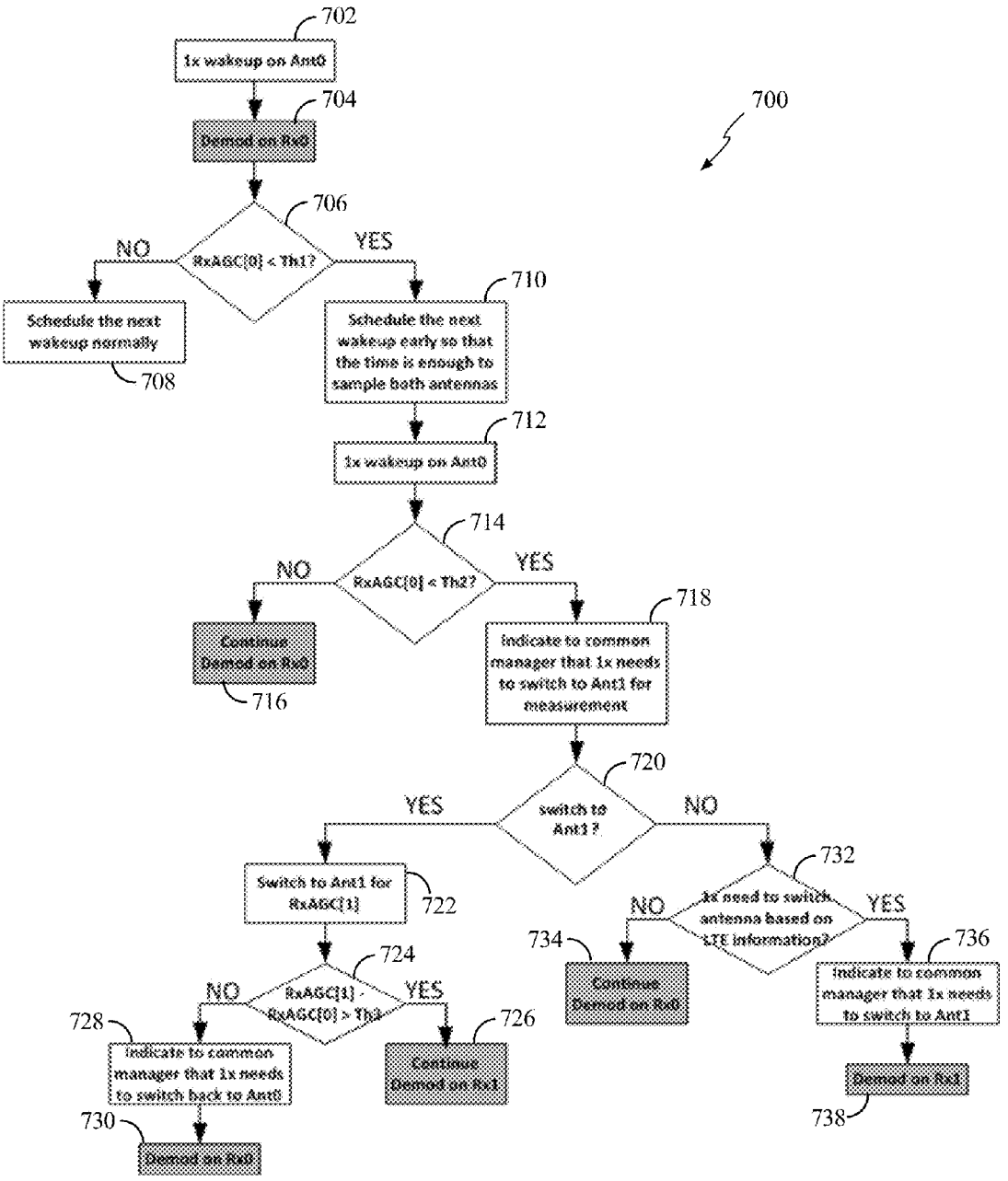
700
702
1x wakeup on Ant0
704
Demod on Rx0
706
RxAGC[0] < Th1?
NO
YES
Schedule the next wakeup normally
708
710
Schedule the next wakeup early so that the time is enough to sample both antennas
712
1x wakeup on Ant0
714
RxAGC[0] < Th2?
NO
YES
Continue Demod on Rx0
716
718
Indicate to common manager that 1x needs to switch to Ant1 for measurement
720
switch to Ant1 ?
YES
NO
Switch to Ant1 for RxAGC[1]
722
724
RxAGC[1] - RxAGC[0] > Th3
NO
YES
728
Indicate to common manager that 1x needs to switch back to Ant0
730
Demod on Rx0
726
Continue Demod on Rx1
732
1x need to switch antenna based on LTE information?
NO
YES
734
Continue Demod on Rx0
736
Indicate to common manager that 1x needs to switch to Ant1
738
Demod on Rx1

FIG. 7

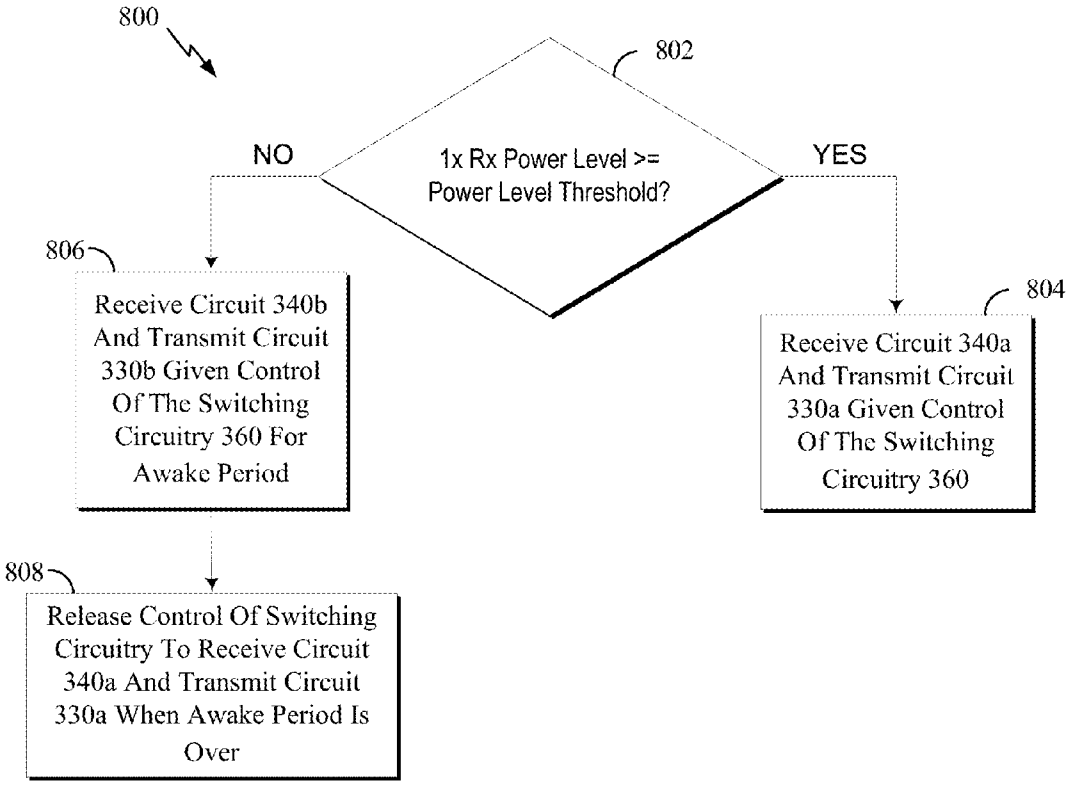
800
802
1x Rx Power Level >= Power Level Threshold?
NO
YES
806
Receive Circuit 340b And Transmit Circuit 330b Given Control Of The Switching Circuitry 360 For Awake Period
804
Receive Circuit 340a And Transmit Circuit 330a Given Control Of The Switching Circuitry 360
808
Release Control Of Switching Circuitry To Receive Circuit 340a And Transmit Circuit 330a When Awake Period Is Over

FIG. 8

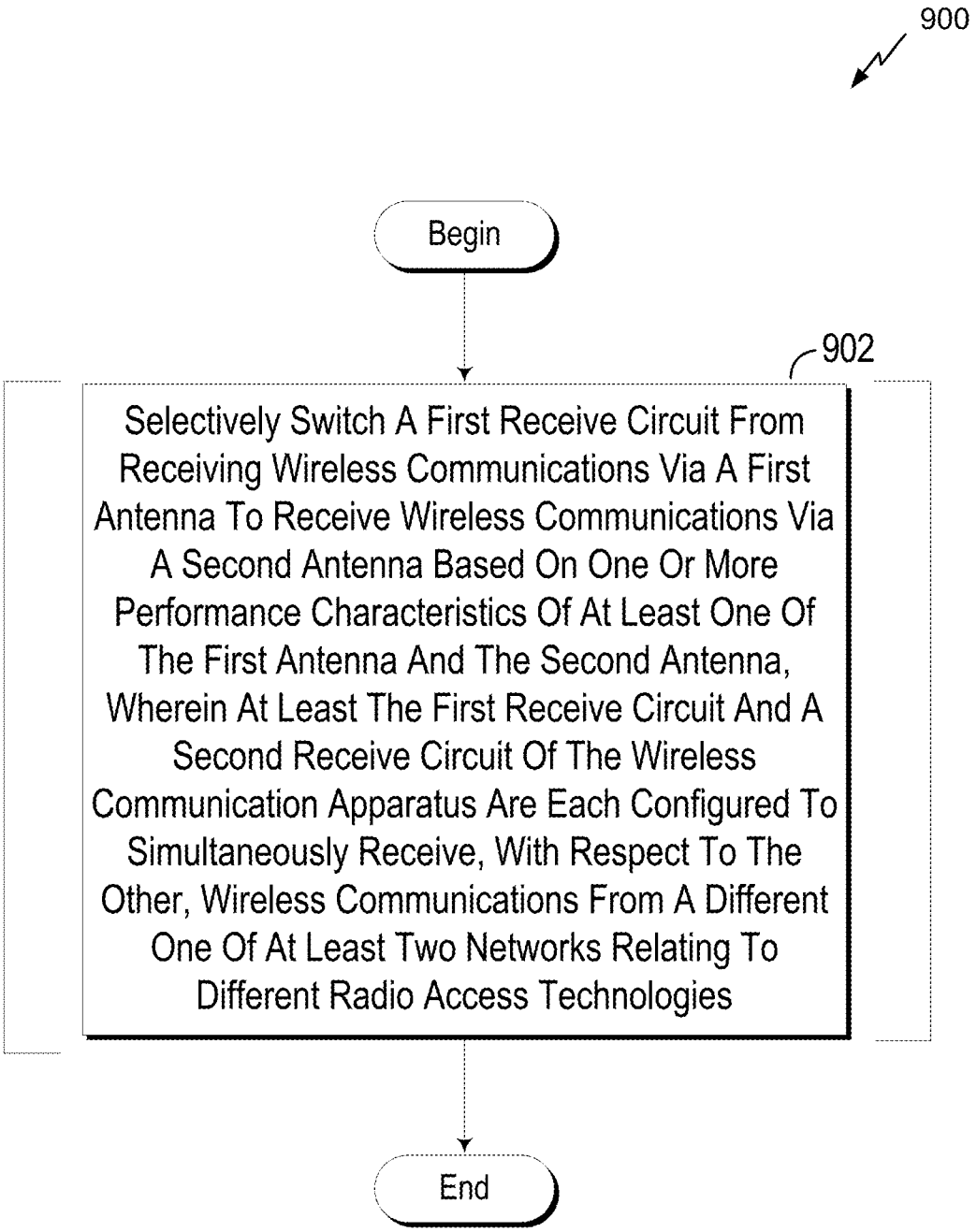
900
Begin
902
Selectively Switch A First Receive Circuit From Receiving Wireless Communications Via A First Antenna To Receive Wireless Communications Via A Second Antenna Based On One Or More Performance Characteristics Of At Least One Of The First Antenna And The Second Antenna, Wherein At Least The First Receive Circuit And A Second Receive Circuit Of The Wireless Communication Apparatus Are Each Configured To Simultaneously Receive, With Respect To The Other, Wireless Communications From A Different One Of At Least Two Networks Relating To Different Radio Access Technologies
End

FIG. 9A

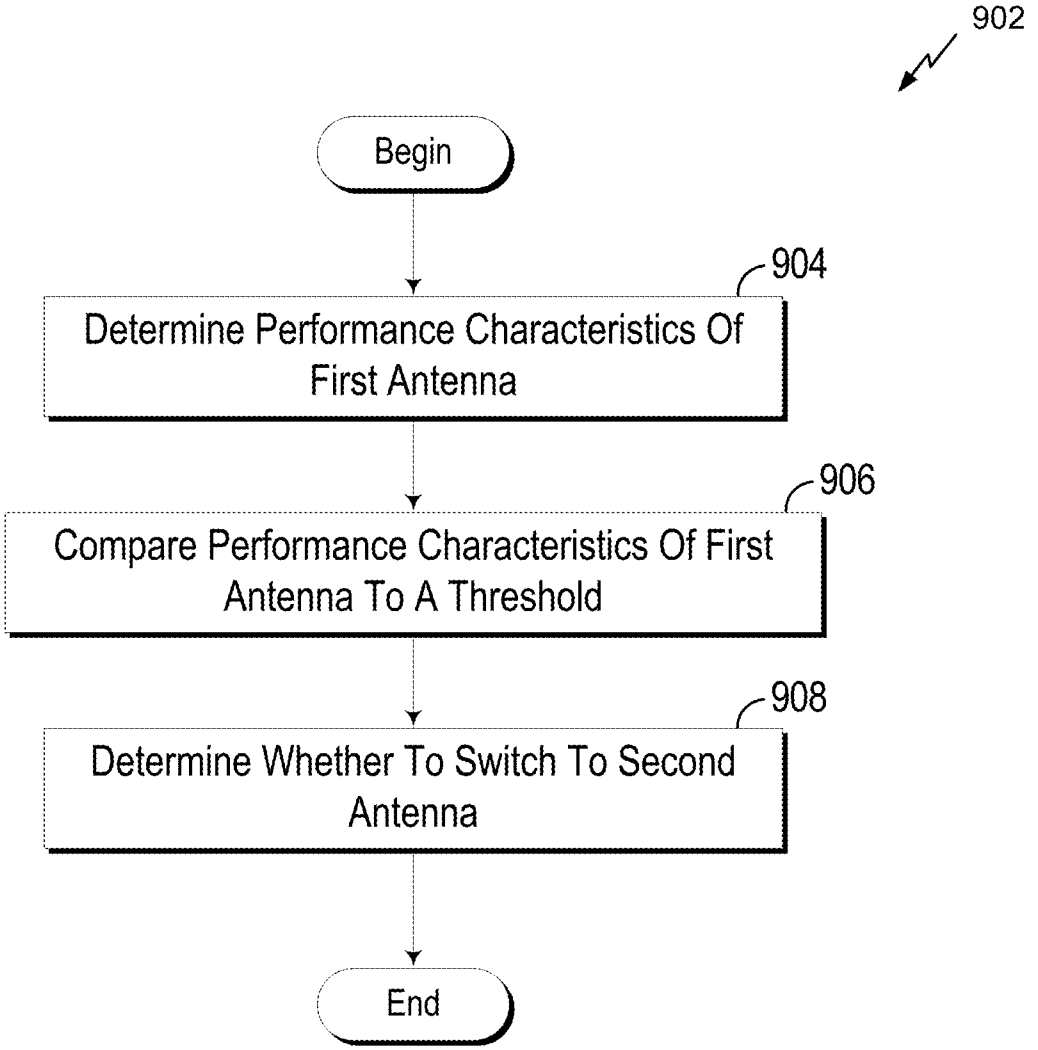
902
Begin
904
Determine Performance Characteristics Of First Antenna
906
Compare Performance Characteristics Of First Antenna To A Threshold
908
Determine Whether To Switch To Second Antenna
End

FIG. 9B

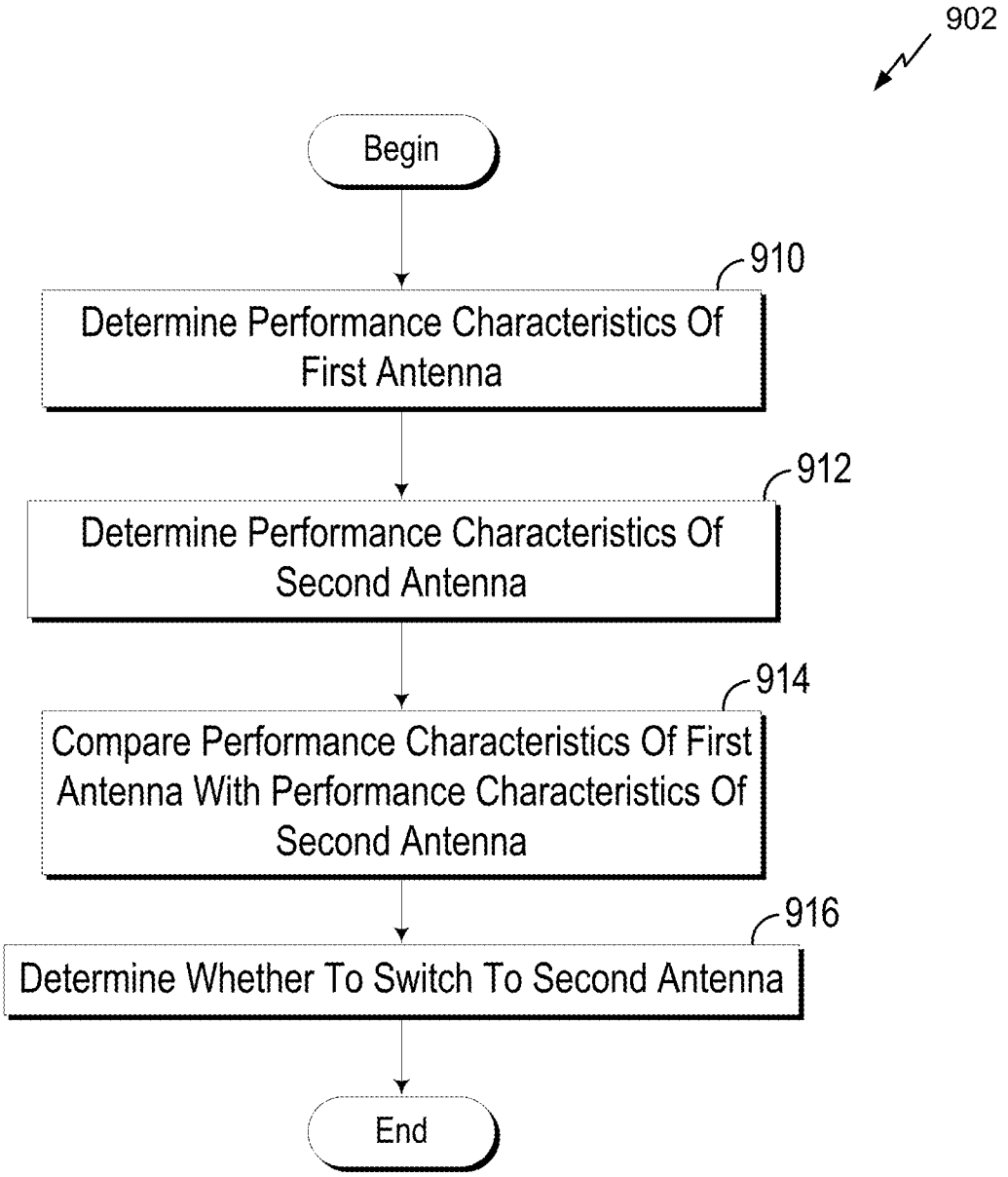
902
Begin
910
Determine Performance Characteristics Of First Antenna
912
Determine Performance Characteristics Of Second Antenna
914
Compare Performance Characteristics Of First Antenna With Performance Characteristics Of Second Antenna
916
Determine Whether To Switch To Second Antenna
End

FIG. 9C

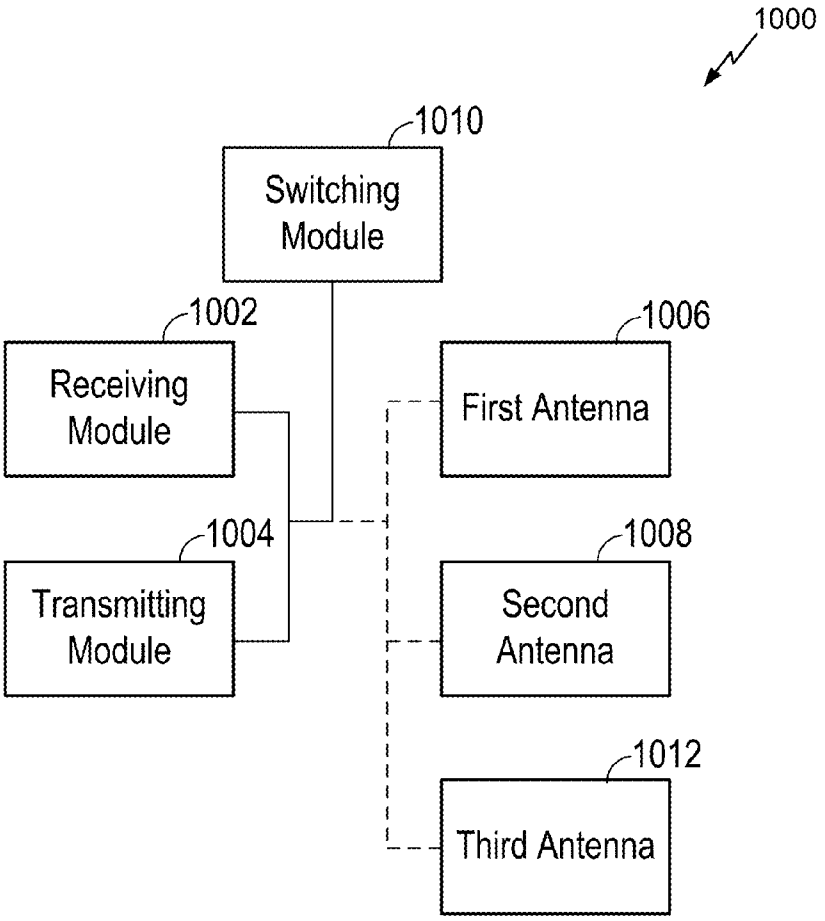
1000
1010
Switching Module
1002
Receiving Module
1006
First Antenna
1004
Transmitting Module
1008
Second Antenna
1012
Third Antenna

FIG. 10

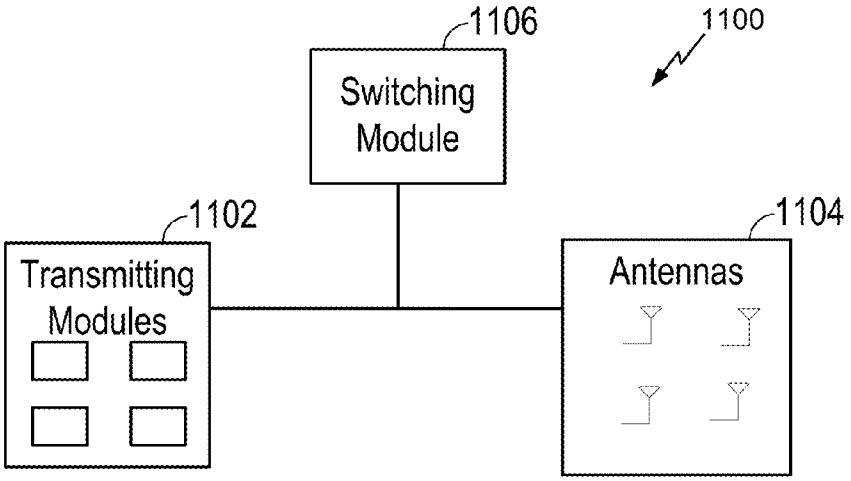
1106
1100
Switching Module
1102
Transmitting Modules
1104
Antennas

FIG. 11

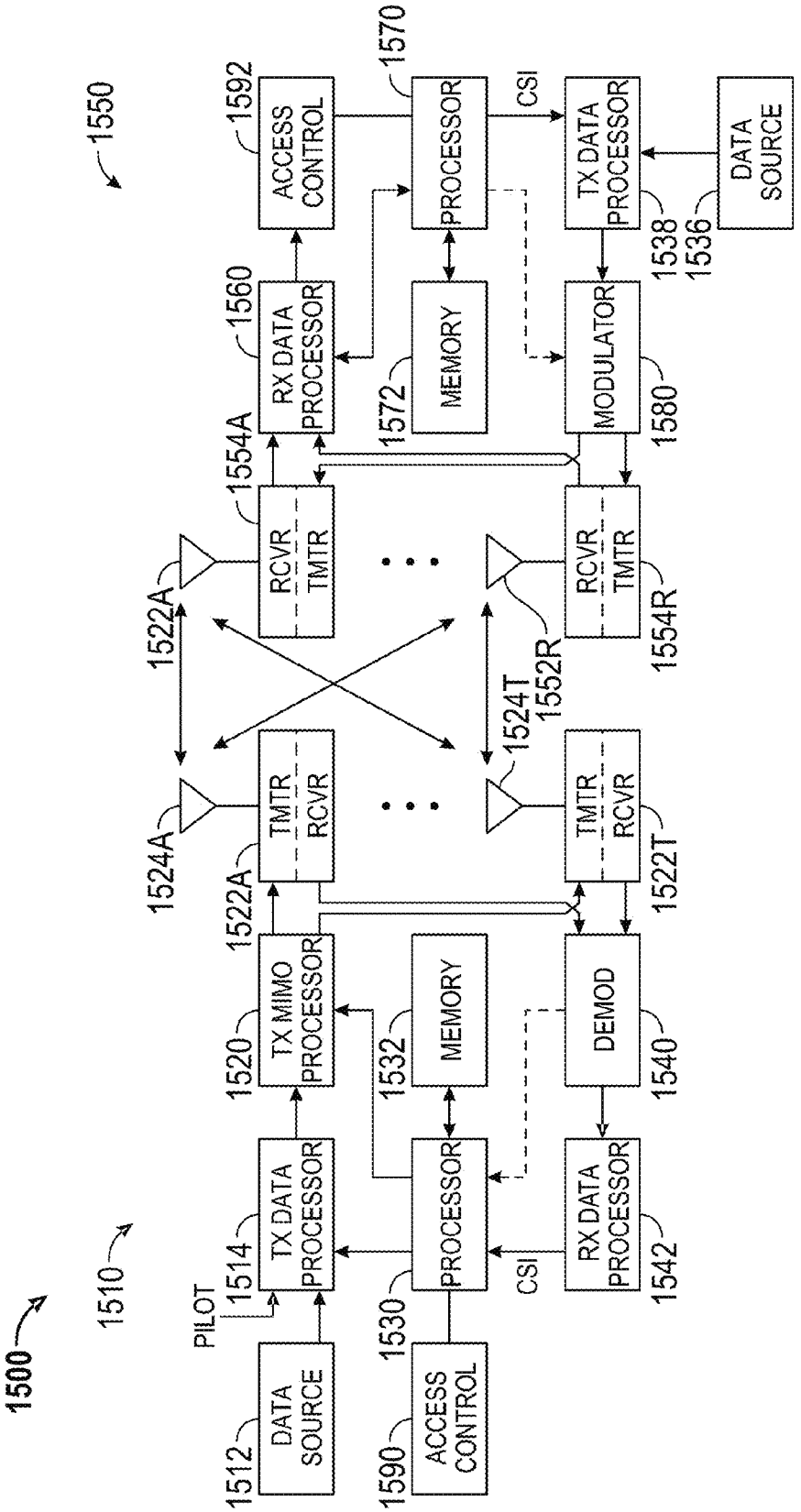
1500
1510
1550
1512
DATA SOURCE
PILOT
1514
TX DATA PROCESSOR
1520
TX MIMO PROCESSOR
1522A
1524A
TMTR
RCVR
1530
PROCESSOR
1532
MEMORY
1590
ACCESS CONTROL
CSI
1540
DEMOD
1542
RX DATA PROCESSOR
1522T
1524T
1552R
1554A
RCVR
TMTR
1554R
1560
RX DATA PROCESSOR
1572
MEMORY
1580
MODULATOR
1592
ACCESS CONTROL
1570
PROCESSOR
CSI
1538
TX DATA PROCESSOR
1536
DATA SOURCE

FIG. 12

ANTENNA SWITCHING DEVICES, METHODS, AND SYSTEMS FOR SIMULTANEOUS COMMUNICATION

CROSS REFERENCE TO RELATED APPLICATIONS

[0001] The present Application for Patent claims priority to and the benefit of U.S. Provisional Application Nos. (a) 61/649,704, filed 21 May 2012; (b) 61/716,582, filed 21 Oct. 2012; (c) 61/734,276, filed 6 Dec. 2012; (d) **61/737,715**, filed 14 Dec. 2012; (e) 61/716,586, filed 21 Oct. 2012; (f) 61/716,599, filed 21 Oct. 2012; (g) 61/716,902, filed 22 Oct. 2012; and (h) 61/736,541, filed 12 Dec. 2012. All of said applications are assigned to the assignee hereof and are hereby expressly incorporated by reference herein as if fully set forth fully below in their entireties for all applicable purposes.

TECHNICAL FIELD

[0002] The technology discussed below relates generally to wireless communications, and more specifically, to antenna selection for maximizing power transmit and receive levels.

BACKGROUND

[0003] Wireless communication systems are widely deployed to provide various types of communication content such as voice and data. Typical wireless communication systems may be multiple-access systems capable of supporting communication with multiple users by sharing available system resources (e.g., bandwidth, transmit power, and the like). Examples of such multiple-access systems may include code division multiple access (CDMA) systems, time division multiple access (TDMA) systems, frequency division multiple access (FDMA) systems, orthogonal frequency division multiple access (OFDMA) systems, and the like. Additionally, the systems can conform to specifications such as third generation partnership project (3GPP), 3GPP2, 3GPP long-term evolution (LTE), LTE Advanced (LTE-A), etc.

[0004] Generally, wireless multiple-access communication systems may simultaneously support communication for multiple mobile devices. Each mobile device may communicate with one or more base stations via transmissions on forward and reverse links. The forward link (or downlink) refers to the communication link from base stations to mobile devices, and the reverse link (or uplink) refers to the communication link from mobile devices to base stations.

[0005] Mobile devices may further simultaneously support communication using multiple radio access technologies. Different radio access technologies may be used to expand the scope of services offered by the communications as a mobile device moves through different regions supporting different radio access technologies. Furthermore, different radio access technologies may be used to simultaneously allow a user to engage in a variety of different forms of wireless communication activities.

BRIEF SUMMARY

[0006] The following summarizes some aspects of the present disclosure to provide a basic understanding of the discussed technology. This summary is not an extensive overview of all contemplated features of the disclosure, and is intended neither to identify key or critical elements of all aspects of the disclosure nor to delineate the scope of any or all aspects of the disclosure. Its sole purpose is to present some concepts of one or more aspects of the disclosure in summary form as a prelude to the more detailed description that is presented later.

[0007] Details of one or more embodiments of the subject matter described in this specification are set forth in the accompanying drawings and the description below. Other features, aspects, and advantages will become apparent from the description, the drawings, and the claims. Note that the relative dimensions of the following figures may not be drawn to scale.

[0008] One embodiment of the subject matter described in the disclosure provides a wireless communication apparatus. The wireless communication apparatus includes a plurality of antennas including a first antenna, a second antenna, and a third antenna. The wireless communication apparatus further includes a plurality of receive circuits including a first receive circuit, at least two of the plurality of receive circuits each configured to simultaneously receive, with respect to the other, wireless communications from a different one of at least two networks relating to different radio access technologies. The wireless communication apparatus further includes a controller configured to selectively switch the first receive circuit from receiving wireless communications via the first antenna to receive wireless communications via the second antenna based on one or more performance characteristics of at least one of the first antenna and the second antenna.

[0009] Another aspect of the subject matter described in the disclosure provides an implementation of a method implemented in a wireless communication apparatus. The method includes selectively switching a first receive circuit from receiving wireless communications via a first antenna to receive wireless communications via a second antenna based on one or more performance characteristics of at least one of the first antenna and the second antenna, wherein at least the first receive circuit and a second receive circuit of the wireless communication apparatus are each configured to simultaneously receive, with respect to the other, wireless communications from a different one of at least two networks relating to different radio access technologies.

[0010] Yet another aspect of the subject matter described in the disclosure provides a wireless communication apparatus. The wireless communication apparatus includes a plurality of antennas including a first antenna, a second antenna, and a third antenna. The wireless communication apparatus further includes a plurality of receive circuits including a first receive circuit, at least two of the plurality of receive circuits each configured to simultaneously receive, with respect to the other, wireless communications from a different one of at least two networks relating to different radio access technologies. The wireless communication apparatus further includes means for selectively switching the first receive circuit from receiving wireless communications via the first antenna to receive wireless communications via the second antenna based on one or more performance characteristics of at least one of the first antenna and the second antenna.

[0011] Another aspect of the subject matter described in the disclosure provides a computer program product. The computer program product includes a computer readable medium. The computer readable medium includes code, when executed by a computer, causes the computer to selectively switch a first receive circuit from receiving wireless communications via a first antenna to receive wireless communications via a second antenna based on one or more performance characteristics of at least one of the first antenna

and the second antenna, wherein at least the first receive circuit and a second receive circuit of the wireless communication apparatus are each configured to simultaneously receive, with respect to the other, wireless communications from a different one of at least two networks relating to different radio access technologies.

[0012] Other aspects, features, and embodiments will become apparent to those of ordinary skill in the art, upon reviewing the following description of specific, exemplary embodiments in conjunction with the accompanying figures. While features may be discussed relative to certain embodiments and figures below, all embodiments can include one or more of the advantageous features discussed herein. In other words, while one or more embodiments may be discussed as having certain advantageous features, one or more of such features may also be used in accordance with the various embodiments of the invention discussed herein. In similar fashion, while exemplary embodiments may be discussed below as device, system, or method embodiments it should be understood that such exemplary embodiments can be implemented in various devices, systems, and methods.

BRIEF DESCRIPTION OF THE DRAWINGS

[0013] FIG. **1** shows an example of a simplified diagram of a wireless communication system in accordance with some embodiments.

[0014] FIG. **2** shows an example of a functional block diagram of an exemplary mobile device operating in a wireless communication network in accordance with some embodiments.

[0015] FIG. **3** shows an example of a functional block diagram of an exemplary access terminal shown in FIGS. **1** and **2** in accordance with some embodiments.

[0016] FIG. **4** is a functional block diagram of a portion of the access terminal shown in FIG. **3** in accordance with some embodiments.

[0017] FIG. **5** is a flowchart of an implementation of an exemplary method of determining whether to switch a transmit circuit and/or receive circuit from communicating using a first antenna to using a second antenna in accordance with some embodiments.

[0018] FIG. **6** is a flowchart of an implementation of another exemplary method of determining whether to switch a transmit circuit and/or receive circuit from communicating using a first antenna to using a second antenna in accordance with some embodiments.

[0019] FIG. **7** is a flowchart of an implementation of another exemplary method of determining whether to switch a transmit circuit and/or receive circuit from communicating using a first antenna to using a second antenna in accordance with some embodiments.

[0020] FIG. **8** is a flowchart of an implementation of provides an exemplary method of coordinating control of switching circuitry among various transmit and receive circuits.

[0021] FIG. **9**A is a flowchart of an implementation of an exemplary method implemented by a wireless communication apparatus in accordance with some embodiments.

[0022] FIG. **9**B is a flowchart of an implementation of another exemplary method implemented by a wireless communication apparatus in accordance with some embodiments.

[0023] FIG. **9**C is a flowchart of an implementation of another exemplary method implemented by a wireless communication apparatus in accordance with some embodiments.

[0024] FIG. **10** is a functional block diagram of an exemplary wireless communication apparatus that may be employed within the wireless communication system in accordance with some embodiments.

[0025] FIG. **11** is a functional block diagram of another exemplary wireless communication apparatus that may be employed within the wireless communication system in accordance with some embodiments.

[0026] FIG. **12** shows an example of a functional block diagram of various components in a communication system in accordance with some embodiments.

[0027] In accordance with common practice the various features illustrated in the drawings may not be drawn to scale. Accordingly, the dimensions of the various features may be arbitrarily expanded or reduced for clarity. In addition, some of the drawings may not depict all of the components of a given system, method, or device. Like reference numerals may be used to denote like features throughout the specification and figures.

DETAILED DESCRIPTION

[0028] Various aspects of embodiments within the scope of the appended claims are described below. It should be apparent that the aspects described herein may be implemented in a wide variety of forms and that any specific structure and/or function described herein is merely illustrative. Based on the present disclosure a person/one having ordinary skill in the art should appreciate that an aspect described herein may be implemented independently of any other aspects and that two or more of these aspects may be combined in various ways. For example, an apparatus may be implemented and/or a method may be practiced using any number of the aspects or embodiments set forth herein. In addition, such an apparatus may be implemented and/or such a method may be practiced using other structure and/or functionality in addition to or other than one or more of the aspects or embodiments set forth herein.

[0029] The word "exemplary" is used herein to mean "serving as an example, instance, or illustration." Any embodiment described herein as "exemplary" is not necessarily to be construed as preferred or advantageous over other embodiments. The following description is presented to enable any person skilled in the art to make and use the invention. Details are set forth in the following description for purpose of explanation. It should be appreciated that one of ordinary skill in the art would realize that the invention may be practiced without the use of these specific details. In other instances, well known structures and processes are not elaborated in order not to obscure the description of the invention with unnecessary details. Thus, the present invention is not intended to be limited by the embodiments shown, but is to be accorded with the widest scope consistent with the principles and features disclosed herein.

[0030] The techniques described herein may be used for various wireless communication networks such as Code Division Multiple Access (CDMA) networks, Time Division Multiple Access (TDMA) networks, Frequency Division Multiple Access (FDMA) networks, Orthogonal FDMA (OFDMA) networks, Single-Carrier FDMA (SC-FDMA) networks, and the like. The terms "networks" and "systems"

are often used interchangeably. A CDMA network may implement a radio technology such as Universal Terrestrial Radio Access (UTRA), cdma2000, and the like. UTRA includes Wideband-CDMA (W-CDMA) and Low Chip Rate (LCR). A cdma2000 network may include IS-2000, IS-95, and IS-856 standards. A TDMA network may implement a radio technology such as Global System for Mobile Communications (GSM). An OFDMA network may implement a radio technology such as Evolved UTRA (E-UTRA), IEEE 802.11, IEEE 802.16, IEEE 802.20, Flash-OFDM", etc. UTRA, E-UTRA, and GSM are part of Universal Mobile Telecommunication System (UMTS). Long Term Evolution (LTE) is a release of UMTS that uses E-UTRA. UTRA, E-UTRA, GSM, UMTS, and LTE are described in documents from an organization named "3rd Generation Partnership Project" (3GPP). The cdma2000 and EV-DO standards are described in documents from an organization named "3rd Generation Partnership Project 2" (3GPP2). These various radio technologies and standards are known in the art.

[0031] Single carrier frequency division multiple access (SC-FDMA), which utilizes single carrier modulation and frequency domain equalization is one technique used in a wireless communication system. SC-FDMA has similar performance and essentially the same overall complexity as those of OFDMA system. SC-FDMA signal has lower peak-to-average power ratio (PAPR) because of its inherent single carrier structure. SC-FDMA may be useful especially for use in uplink communications where lower PAPR greatly benefits the mobile terminal in terms of transmit power efficiency. For example, SC-FDMA has been adopted as an option for the uplink multiple access method in LTE networks.

[0032] FIG. **1** illustrates an exemplary wireless communication network **100** in accordance with some embodiments. The wireless communication network **100** is configured to support communication between a number of users. The wireless communication network **100** may be divided into one or more cells **102**, such as, for example, cells **102***a*-**102***g*. Communication coverage in cells **102***a*-**102***g* may be provided by one or more nodes **104** (e.g., base stations, access points, and the like), such as, for example, nodes **104***a*-**104***g*. Each node **104** may provide communication coverage to a corresponding cell **102**. The nodes **104** may interact with a plurality of access terminals (ATs), such as, for example, ATs **106***a*-**106***l*. For ease of reference, each of the ATs **106***a*-**106***l* may be referred to hereinafter as an access terminal **106**.

[0033] Each AT **106** may communicate with one or more nodes **104** on a forward link (FL) and/or a reverse link (RL) at a given moment. A FL is a communication link from a node to an AT. A RL is a communication link from an AT to a node. The FL may also be referred to as the downlink. Further, the RL may also be referred to as the uplink. The nodes **104** may be interconnected, for example, by appropriate wired or wireless interfaces and may be able to communicate with each other. Accordingly, each AT **106** may communicate with another AT **106** through one or more nodes **104**.

[0034] The wireless communication network **100** may provide service over a large geographic region. For example, the cells **102***a*-**102***g* may cover only a few blocks within a neighborhood or several square miles in a rural environment. In one embodiment, each cell may be further divided into one or more sectors (not shown).

[0035] As described above, a node **104** may provide an access terminal (AT) **106** access within its coverage area to another communications network, such as, for example the internet or another cellular network.

[0036] An AT **106** may be a wireless communication device (e.g., a mobile phone, router, personal computer, server, etc.) used by a user to send and receive voice or data communications over a communications network. An AT **106** may also be referred to herein as user equipment (UE), mobile station (MS), or a terminal device. As shown, ATs **106***a*, **106***h*, and **106***j* comprise routers. ATs **106***b*-**106***g*, **106***i*, **106***k*, and **106***l* comprise mobile phones. However, each of ATs **106***a*-**106***l* may comprise any suitable communication device.

[0037] An access terminal **106** may be multimode, capable of operating using different radio access technologies (RATs). For example, AT **106** may be capable of operating using one or more RATs defined by standards such as cdma2000 lx, lx-EV-DO, LTE, eHRPD, 802.11, and the like. An AT **106** may perform a plurality of tasks across various communication systems using these different RATs. The communication may be accomplished using a plurality of collocated transmitters and/or receivers, or may be communicated using one single transmitter and/or receiver.

[0038] The techniques described herein may further be used with various modes associated with the different RATs, such as simultaneous voice and data modes that allow simultaneously sending and receiving voice and non-voice data. For example, Simultaneous 1× Voice and EV-DO Data (SVDO) and Simultaneous 1× and LTE (SVLTE) modes may be employed in various embodiments.

[0039] FIG. **2** shows an example of a functional block diagram of an exemplary access terminal (AT) **106** operating in a wireless communication network **200** in accordance with some embodiments. The wireless communication network **200** comprises the AT **106**, a second wireless communications device **210**, a third wireless communications device **220**, a fourth wireless communications device **230**, and a cellular tower **240**. The wireless communication network **200** may be configured to support communication between a multitude of devices, such as the wireless communications devices **106***a*, **210**, **220**, **230**, and tower **240**. The mobile wireless communications devices (e.g., **106***a*, **210**, and **220**) may comprise, for example, personal computers, PDAs, music players, video players, multimedia players, televisions, electronic game systems, digital cameras, video camcorders, watches, remote controls, headsets, and so on. The AT **106** may be simultaneously in communication with each of devices **210**, **220**, **230**, and **240** via one or more transmitters and/or receivers collocated on access terminal **106**.

[0040] With continuing reference to FIG. **2**, the AT **106** may communicate with other wireless communications devices (e.g., **210**, **220**) over a variety of communication channels. The communication channels may comprise Ultra-Wide Band (UWB) channels, Bluetooth channels, 802.11 channels (e.g., 802.11a, 802.11b, 802.11g, 802.11n, etc.), infrared (IR) channels, ZigBee (802.15) channels, or a variety of other channels, as is well known in the art. In one embodiment, the channel may be a UWB channel conforming to the ECMA-368 standard. Other channels would be readily recognized as possible as well.

[0041] The wireless communications network **200** may comprise a wireless local area network (WLAN) covering a physical area, such as a home, office, a group of buildings, or the like. A WLAN may use standards, such as an 802.11 standard and/or other standards, for wireless communications. In some embodiments, a WLAN may use peer-to-peer

communication in which the wireless communication devices directly communicate with each other.

[0042] The wireless communications network **200** may also comprise a wireless personal area network (WPAN), spanning, for example, an area of a few meters. A WPAN may use standards such as infrared, Bluetooth, a WiMedia based UWB standard (e.g., ECMA-368), a ZigBee standard, and/or other standards for wireless communications. A WPAN may use peer-to-peer communication in which the wireless communication devices directly communicate with each other.

[0043] The wireless communications network **200** may also comprise a wide wireless area network (WWAN). The WWAN may use standards such as cdma2000 1×, 1×-EV-DO, LTE, eHRPD and the like. The access terminal **106** may connect to another network, such as a wireless communications network or the Internet, through network **200**. The messages sent across the wireless communications network **200** may comprise information related to various types of communication (e.g., voice, data, multimedia services, and the like) and may be of varied degrees of importance to the user of access terminal **106**, as described in greater detail below.

[0044] Although the following embodiments may refer to FIG. **1** or **2**, one will recognize that they are readily applicable to other communication standards. For example, some embodiments may be applicable in a UMTS communication system. Some embodiments may be applicable in an OFDMA communication system. The communication system **200** may further comprise any type of communication system including, but not limited to, a CDMA system, a GSM system, a wideband code division multiple access (WCDMA), and an OFDM system.

[0045] FIG. **3** shows an example of a functional block diagram of an exemplary access terminal **106** shown in FIGS. **1** and **2** in accordance with some embodiments. The access terminal **106** may be multimode, capable of operating using different radio access technologies (RATs) such as any of the radio technologies mentioned above with reference to FIGS. **1** and **2**. The access terminal **106** is an example of a device that may be configured to implement the various methods described herein. The access terminal **106** may implement any of the devices illustrated in FIGS. **1-2**.

[0046] The access terminal **106** may include a central data bus **317** linking several circuits together. The circuits include a controller/processor **320**, a memory unit **308**, and RAT circuitry **304**, which may include various RAT modules such as modules **302***a*, **302***b*, **302***c*, and **302***d*. The processor/controller **320** may comprise or be a component of a processing system implemented with one or more processors. The processor/controller **320** may be configured as or referred to as an application processor **320** in some embodiments. The one or more processors of the processor/controller **320** may be implemented with any combination of general-purpose microprocessors, microcontrollers, digital signal processors (DSPs), field programmable gate array (FPGAs), programmable logic devices (PLDs), controllers, state machines, gated logic, discrete hardware components, dedicated hardware finite state machines, or any other suitable entities that can perform calculations or other manipulations of information.

[0047] In addition, the processor/controller **320** may be configured to communicate with and control the operation of various modules configured for different RATs. Each of the RAT modules **302***a*, **302***b*, **302***c*, and **302***d* may implement a specific RAT and may each individually include additional memory modules, communication components and functions which are applicable to the RAT type implemented by the module. Each RAT module **302***a*, **302***b*, **302***c*, and **302***d* may further include a controller **306***a*, **306***b*, **306***c*, and **306***d*, each of which may be referred to herein as a modem processor **306***a*, **306***b*, **306***c*, and **306***d* that may be used to control the operation of each RAT. For ease of reference, controllers **306***a*, **306***b*, **306***c*, and **306***d* may hereinafter be referred to as a RAT controller **306**. Furthermore, RAT controllers **306***a*, **306***b*, **306***c*, and **306***d* may be provided independently of each module **302***a*, **302***b*, **302***c*, and **302***d* for controlling the modules. In some embodiments, the processor **320** may be configured to perform the functions of the RAT controller **306**. Furthermore, each RAT module may include its own transceiver(s), including one or more antennas (not shown). The RAT modules may implement any of the RAT types discussed above with reference to FIGS. **1-2**, or any other readily recognizable RAT types.

[0048] The access terminal **106** further comprises one or more transmit circuits **330***a*, **330***b*, and **330***n*. Transmit circuits **330***a*, **330***b*, and **330***n* may also be referred to as transmit chains having one or more components configured to transmit wireless communications signals via antennas **370***a*, **370***b*, and/or **370***n*. For example, transmit circuit **330***a* may include a modulator (not shown), a digital-to-analog (D/A) converter (not shown), an amplifier (not shown), as well as other circuitry for modulating and preparing wireless communications signals for transmission via antennas **370***a*, **370***b*, and/or **370***n*. In some cases, the RAT circuitry **304** may include transmit circuits **330***a*, **330***b*, and **330***n* where each RAT module **302***a*, **302***b*, **302***c*, and **302***d* may include one of the transmit circuits **330***a*, **330***b*, and **330***n*. As such, transmit circuits **330***a*, **330***b*, and **330***n* may be configured to transmit according to one or more radio access technologies associated with one of RAT modules **302***a*, **302***b*, **302***c*, and **302***d*. In some cases, the access terminal **106** may have one transmit circuit **330***a*. In other cases, one or more of transmit circuits **330***a*, **330***b*, and **330***n* may be activated or deactivated. In one aspect, the transmit circuits **330***a* may include components particular to one of the RAT modules **302***a*, **302***b*, **302***c*, and **302***d*. For example, a RAT module **302***a* may implement wireless communications using OFDM, while a second RAT module **302***b* may implement a wireless communications using CDMA. As such, one transmit circuit **330***a* may include components configured for OFDM communications while a second transmit circuit **330***b* may include components configured CDMA communications.

[0049] The access terminal **106** further comprises one or more receive circuits **340***a*, **340***b*, and **340***n*. Receive circuits **340***a*, **340***b*, and **340***n* may also be referred to as receive chains having one or more components configured to receive wireless communications signals via antennas **370***a*, **370***b*, and/or **370***n*. For example, receive circuit **340***a* may include an amplifier (not shown), an analog-to-digital converter (not shown), a demodulator (not shown), as well as other circuitry for receiving and demodulating wireless communications signals received via antennas **370***a*, **370***b*, and/or **370***n*. In some cases, the RAT circuitry **304** may include receive circuits **340***a*, **340***b*, and **340***n* where each RAT module **302***a*, **302***b*, **302***c*, and **302***d* may include one or more of the receive circuits **340***a*, **340***b*, and **340***n*. As such, each of receive circuits **340***a*, **340***b*, and **340***n* may be configured to receive according to a radio access technology associated with one of the RAT modules **302***a*, **302***b*, **302***c*, and **302***d*. In some cases,

the access terminal **106** may have one receive circuit **340***a*. In other cases, one or more of the receive circuits **340***a*, **340***b*, and **340***n* may be activated or deactivated.

[0050] Transmit circuits **330***a*, **330***b*, and **330***n* may process and convert base-band signals to high-frequency (HF) signals to for transmission. Receive circuits **340***a*, **340***b*, and **340***n* in turn may process and buffer received signals before sending the signals to the data bus **317**. Transmit circuits **330***a*, **330***b*, and **330***n* may process and buffer the data from the data bus **317** before transmitting the signals from the access terminal **106**. The processor/controller **320** controls the proper timing of the various components of the access terminal **106**. For example, the processor/controller **320** may allocate time slots for the data sensing and processing for the different frequency bands for transmit circuits **330***a*, **330***b*, and **330***n* and receive circuits **340***a*, **340***b*, and **340***n*.

[0051] Each of transmit circuits **330***a*, **330***b*, and **330***n* and receive circuits **340***a*, **340***b*, and **340***n* may be configured to respectively transmit and receive via one or more of the antennas **370***a*, **370***b*, and **370***n*. Individual transmit circuits **330***a*, **330***b*, and **330***n* and receive circuits **340***a*, **340***b*, and **340***n* may transmit and receive information associated with a different radio access technology via a particular antenna **370***a*, **370***b*, or **370***n*. For example, for simultaneous voice and data modes, one transmit circuit **330***a* may be used for transmitting voice communications via antenna **370***a* while another transmit circuit **330***b* may be used for transmitting non-voice data via antenna **370***b*. Stated another way, a first transmit circuit **330***a* may be used for transmitting and receiving voice communications (e.g., cdma2000 1×, and the like) via antenna **370***a* while a second transmit circuit **330***b* may be used for data only communications (e.g., LTE, EV-DO, and the like) via antenna **370***b*. As a result, at least two of the plurality of receive circuits **340***a*, **340***b* and/or transmit circuits **330***a*, **330***b* may each be configured to simultaneously receive and/or transmit, with respect to the other, wireless communications from a different one of at least two networks relating to different radio access technologies. One of skill in the art will understand that any of the transmit circuits **340***a*, **340***b*, **340***n* and the receive circuits **340***a*, **340***b*, **340***c* may be configured to simultaneously transmit and receive using any suitable radio access technology.

[0052] The processor/controller **320** directs the multiple transmit circuits **330***a*, **330***b*, and **330***n* and receive circuits **340***a*, **340***b*, and **340***n* for detecting and/or processing of signals from the different frequency bands via antennas **370***a*, **370***b*, and **370***n*. Antennas **370***a*, **370***b*, and **370***n* may be placed in different physical locations within the access terminal **106**. For example, antennas **370***a*, **370***b*, and **370***n* may be at opposite (e.g., distal or lateral) ends or corners of the access terminal **106** or adjacent to each other. Generally, antennas **370***a*, **370***b*, and **370***n* can be located at similar or distinct places as desired or in accordance with device design.

[0053] A switching circuit **360** may be provided to allow a processor/controller **320** to select the antennas **370***a*, **370***b*, and **370***n* for which transmit circuits **330***a*, **330***b*, and **330***n* or receive circuits **340***a*, **340***b*, and **340***n* are configured to transmit and receive. The switching circuit **360** may include circuitry configured to switch M inputs corresponding to transmit circuits **330***a*, **330***b*, and **330***n* and receive circuits **340***a*, **340***b*, and **340***n* to N outputs corresponding to antennas **370***a*, **370***b*, and **370***n*. As shown in FIG. **3**, there may be more or less than three transmit circuits **330***a*, **330***b*, and **330***n*, three receive circuits **340***a*, **340***b*, and **340***n*, and three antennas **370***a*, **370***b*, and **370***n*. As one example, the switching circuit **360** may be configured as a crossbar switch or other suitable switching circuitry. The processor/controller **320** may be configured to switch transmit circuits **330***a*, **330***b*, and **330***n* and receive circuits **340***a*, **340***b*, and **340***n* to respectively transmit and receive via any combination of antennas **370***a*, **370***b*, and **370***n*.

[0054] The processor/controller **320** performs the function of data management of the data bus **317** and the function of general data processing, including executing the instructional contents of the memory unit **308**. The memory unit **308** may include a set of modules and/or instructions. Instructions particular to the process steps of the access terminal **106** as shown and described in the embodiments described below can be coded in the various functions included in the contents of the memory unit **308**. In one embodiment, the memory unit **308** is a RAM (Random Access Memory) circuit. Some communication device functions, such as the handoff functions, are software routines, modules, and/or data sets. The memory unit **308** can be tied to another memory circuit (not shown), which may be of the volatile or nonvolatile type. As an alternative, the memory unit **308** can be made of other circuit types, such as an EEPROM (Electrically Erasable Programmable Read Only Memory), an EPROM (Electrical Programmable Read Only Memory), a ROM (Read Only Memory), an ASIC (Application Specific Integrated Circuit), a magnetic disk, an optical disk, and others well known in the art. In addition, the memory unit **308** can be a combination of ASIC and memory circuitry of the volatile type and/or non-volatile type.

[0055] The access terminal **106** may further include a device state sensor **350**. The device state sensor may be configured to detect one or more states or modes of a device according to how the device is being used, handled, and/or positioned. For example, the device state sensor **350** may be configured as a proximity sensor that may be configured to detect a proximity of the user or other object with respect to the access terminal **106**. In one embodiment, the device state sensor **350** includes multiple proximity sensors. Each of the multiple proximity sensors may be placed next to the antennas **370***a*, **370***b*, and **370***n*. Each of the multiple proximity sensors is configured to detect whether an object is in proximity (e.g., blocking) a respective antenna **370***a*, **370***b*, and **370***n*. The device state sensor **350** may further include and/or be configured as an orientation sensor that may be configured to detect the orientation of the access terminal **106** with respect to the user of the access terminal **106**. For example, the orientation sensor may include any suitable sensor, such as an accelerometer, a gyroscope, or the like. The device state sensor **350** may further include and/or be configured as other types of sensors for detecting a temporary condition or state of the access terminal **106**. While shown as one functional block, multiple device state sensors of different types may be included. For example, the access terminal **106** may include both a separate proximity sensor and a separate orientation sensor.

[0056] In this specification and the appended claims, it should be clear that the term "circuitry" is construed as a structural term and not as a functional term. For example, circuitry can be an aggregate of circuit components, such as a multiplicity of integrated circuit components, in the form of processing and/or memory cells, modules, units, blocks, and the like, such as shown and described in FIG. **3**.

[0057] Although described separately, it is to be appreciated that functional blocks described with respect to the access terminal **106** need not be separate structural elements. For example, the processor **320**, the memory unit **308**, and RAT modules **302***a*, **302***b*, **302***c*, and **302***d* may be embodied on a single chip. The processor **320** may additionally, or in the alternative, contain memory, such as processor registers. Similarly, one or more of the functional blocks or portions of the functionality of various blocks may be embodied on a single chip. Alternatively, the functionality of a particular block may be implemented on two or more chips.

[0058] Access terminal **106** performance may be affected by blockage of receive and transmit signals to and from the access terminal **106**. For example, due to an object (e.g., a hand or body) blocking an antenna, device performance may be severely impacted. In some scenarios, the impact may lead to dropped calls or paging failure. Also, blocking may in some instances cause higher transmit power, which may lead to increased interference to the communication network and high power consumption. Accordingly, systems, apparatus, and methods are needed for selection of antennas for signal reception and/or transmission based on various performance characteristics of the antennas. The selection may depend on several factors, which will be described in detail below. Depending on these factors, one or more of the antennas may be selected in a manner to improve signal reception/transmission.

[0059] FIG. **4** is a functional block diagram of a portion of the access terminal **106** shown in FIG. **3** in accordance with some embodiments. In some cases, the access terminal **106** may include three antennas **370***a*, **370***b*, and **370***c*. The access terminal may further include two transmit circuits **330***a*, **330***b*, three receive circuits **340***a*, **340***b*, **340***c*, switching circuitry **360**, and a processor/controller **320**. Antenna **370***c* may be dedicated for communications using only receive circuit **340***c*, while antennas **370***a* and **370***b* may be used by any of the transmit circuits **330***a*, **330***b* and receive circuits **340***a*, **340***b*. In some embodiments, transmit circuits **330***a*, **330***b* and receive circuits **340***a*, **340***b*, **340***c* may each transmit and receive information associated with a particular radio access technology. For example, transmit circuit **330***a* and receive circuits **340***a*, **340***c* may be used for transmitting and receiving data only communications, and transmit circuit **330***b* and receive circuit **340***b* may be used for transmitting and receiving voice communications. Accordingly, antenna **370***c* may be dedicated for receiving data only communications for receive circuit **340***c*, while antennas **370***a* and **370***b* may be used for communicating either data only communications to and from receive circuit **340***a* and transmit circuit **330***a* or voice communications to and from receive circuit **340***b* and transmit circuit **330***b*.

[0060] As described above, the transmit circuits **330***a*, **330***b* and receive circuits **340***a*, **340***b*, **340***c* may simultaneously transmit and receive using the multiple antennas **370***a*, **370***b*, and **370***c*. However, as described above, the performance of one antenna (e.g., antenna **370***b*) may be better than another antenna (e.g., antenna **370***a*) based on any one of a number of factors that may be related to, but not limited to, the arrangements of the antennas on the access terminal **106**, the proximity of external objects to the antennas **370***a*, **370***b*, and **370***c*, or inherent antenna characteristics. Furthermore, during operation, certain transmit circuits **330***a*, **330***b* and receive circuits **340***a*, **340***b*, **340***c* may have different data transmission priorities or transmit power preferences. For example, the preferences may be based on priority levels assigned to different radio access technologies associated with each of the plurality of receive circuits. As an example, higher priority communications may include voice communications and the lower priority communications may include data only communications. In some embodiments, the preferences may be assigned to and/or and adjusted for each of the receive circuits **340***a*, **340***b*, **340***c* and/or transmit circuits **330***a*, **330***b*, **330***c* based on a state of each of the plurality of receive circuits. For example, depending on the state of the transmit or receive circuit (initialization, connected, idle, access or traffic, acquisition, etc.), the priority of the transmit or receive circuits may change.

[0061] The various factors affecting antenna performance may include certain operating conditions that result in one or more of the antennas **370***a*, **370***b*, and **370***c* being de-sensed or otherwise resulting in one or more performance characteristics of the antennas **370***a*, **370***b*, and/or **370***c* being reduced. For example, the hand of a user may be wrapped around the access terminal **106**, effectively blocking one or more of the antennas **370***a*, **370***b*, and **370***c*. As another example, the access terminal **106** may be positioned such that antennas **370***a*, **370***b*, and/or **370***c* may operate with less than ideal receive and/or transmit conditions. These scenarios may reduce power levels of received signals, thus making it more difficult to receive and demodulate signals. These scenarios may also make it difficult to effectively transmit signals. For example, blocking one or more of antennas **370***a*, **370***b* may reduce the total signal strength such that transmit circuits **330***a*, **330***b* may need to increase power levels. However, with respect to increased transmit power levels, an access terminal **106** may be subject to regulatory radio frequency (RF) safety requirements and may be required to operate within specific guidelines before entering the market. For example, devices operating near the human body are evaluated to determine the Specific Absorption Rate ("SAR") their electromagnetic waves produce. SAR is the time-rate of electromagnetic energy absorption per unit of mass in a lossy media, and may be expressed as:

$$SAR(r) = \frac{\sigma(r)}{\rho(r)}|E(r)|^2_{rms} \qquad \text{(Equation 1)}$$

Where E(r) is the exogenous electric field at point r, while σ(r) and ρ(r) are the corresponding equivalent electrical conductivity and mass density, respectively. In one aspect, these safety guidelines may limit the amount of allowed transmit power levels. As such, when one or more of the antennas **370***a*, **370***b* are blocked, the maximum transmit power level allowed may be significantly reduced in order to avoid exceeding SAR limits.

[0062] As operation of the access terminal **106** may affect performance of the antennas **370***a*, **370***b*, and/or **370***c*, it may be desirable to have dynamic systems and methods for coupling receive circuits **340***a*, **340***b*, **340***c* and transmit circuits **330***a*, **330***b* to antennas **370***a*, **370***b*, and/or **370***c*, as provided by embodiments described herein. Accordingly, certain aspects of various embodiments described herein are directed to switching transmit circuits **330***a*, **330***b* and receive circuits **340***a*, **340***b* for transmitting and receiving via the different antennas **370***a* and **370***b* to improve performance of the access terminal **106**. For example, it may be desirable for the receive circuit **340***b* receiving the highest priority communi-

cations to receive via the antenna **370***b* having better performance characteristics than antenna **370***a*. In addition, other receive and/or transmit circuit power requirements may result in improved performance if a receive circuit **340***b* and/or transmit circuit **330***b* is coupled to the highest performing antenna **370***b*. In one embodiment, the dynamic switching of the transmit and receive circuits may mitigate hand/body blocking and may allow for selecting antennas in such a way to meet regulatory limits at the least cost to performance and/or to enable good transmit and receive conditions. Furthermore, in one aspect, transmit antenna selection may allow the mitigation of interference and may provide a target quality of service using the least amount of transmit power.

[0063] Referring to FIG. **4**, the processor/controller **320** may be configured to switch the transmit circuit **330***b* and the receive circuit **340***b* to communicate via either the antenna **370***a* or the antenna **370***b*. The receive circuit **340***b* may be associated with the transmit circuit **330***b* in that the receive circuit **340***b* is configured to communicate via the same antenna **370***a* or **370***b* as that used by the transmit circuit **330***b*. As such, the processor/controller **320** may be configured to switch the transmit circuit **330***b* and receive circuit **340***b* to respectively transmit and receive via the antenna **370***a* or the antenna **370***b*. Stated another way, the first receive circuit **340***b* may be configured to be switched alongside the transmit circuit **330***b*. In some embodiments, the transmit circuit **330***b* and the receive circuit **340***b* may be configured to transmit and receive communications having higher priority than communications that are transmitted and received using transmit circuit **330***a* and receive circuit **340***a*. For example, the higher priority communications may include voice communications and the lower priority communications may include data only communications. In addition, the transmit circuit **330***a* and the receive circuit **340***a* may be configured to communicate via either of the antennas **370***a* or **370***b* that is not being used by the transmit circuit **330***b* and the receive circuit **340***b*. Accordingly, the processor/controller **320** may be configured to switch the transmit circuit **330***a* and the receive circuit **340***a* to communicate via the antenna **370***a* and switch the transmit circuit **330***b* and the receive circuit **340***b* to communicate via the antenna **370***b*, which has better performance characteristics than antenna **370***a*. In some embodiments, the switch may occur due to the higher priority of the communications communicated by the transmit circuit **330***b* and the receive circuit **340***b* compared to that communicated by the transmit circuit **330***a* and the receive circuit **340***a*.

[0064] The transmit circuits **330***a*, **330***b* and the receive circuits **340***a*, **340***b*, **340***c* may include measurement circuitry **342***a*-**342***e*, respectively. Measurement circuitry **342***a*-**342***e* may be configured to measure performance characteristic metrics. Performance characteristic metrics may include receive and transmit power levels, automatic gain control (AGC) measurements, signal to interference plus noise ratio (SINR), signal to noise ratio (SNR), and the like. As one example, the measurement circuitry **342***b*, **342***d*, **342***e* may be configured to gather receive AGC measurements. As another example, the measurement circuitry **342***a* and **342***c* may be configured to gather transmit AGC measurements.

[0065] In some embodiments, factors affecting performance characteristics of the antennas **370***a*, **370***b*, and **370***c* may correspond to, for example, the proximity of a user or other object to the access terminal **106**. For example, as described above, the device state sensor **350**, such as a plurality of proximity sensors, may be configured to detect a proximity of the user or other objects with respect to the access terminal **106** (e.g., antennas **370***a* and **370***b*). Based on state information of the device state sensor **350** indicating the proximity of an object relative to the antennas **370***a* and **370***b*, the processor/controller **320** may determine performance characteristics of the antennas. Based on the performance characteristics, the processor/controller **320** may determine whether the current antenna **370***a* or **370***b* being used by each of the transmit circuits **330***a* and **330***b* and/or receive circuits **340***a* and **340***b* is blocked, and whether to switch one or more of the circuits to a non-blocked antenna. For example, for an access terminal **106** in an idle state, the processor/controller **320** may choose a non-blocked antenna for voice wakeup so that, upon wakeup, the access terminal **106** may transmit voice communications using the non-blocked antenna. In some aspects, if the processor/controller **320** determines that all possible antennas are blocked, the processor/controller **320** may choose a default antenna configuration. For example, the default antenna configuration may be the transmit circuit **330***a* and the receive circuit **340***a* transmitting and receiving using antenna **370***a*, and the transmit circuit **330***b* and the receive circuit **340***b* transmitting and receiving using antenna **370***b*. In some embodiments, a default antenna may be pre-selected for each of the transmit circuits **330***a*, **330***b* and receive circuits **340***a*, **340***b* when one of the other transmit and receive circuits is active in order to reduce impact to the transmit and receive circuits.

[0066] In some embodiments, other factors affecting performance characteristics of the antennas **370***a*, **370***b*, and **370***c* may correspond to the detected orientation of the access terminal **106**. For example, the processor/controller **320** may detect whether the access terminal **106** is in a portrait or landscape mode. An accelerometer or gyroscope may be used to detect and indicate the orientation of the access terminal **106**. The processor/controller **320** may determine performance characteristics based on the orientation of the access terminal **106**. For example, if the access terminal **106** in landscape mode, the processor/controller **320** may determine that antenna **370***a* is blocked and may cause the switching circuitry to switch the transmit circuit **330***b* and receive circuit **340***b* to transmit communications using a non-blocked antenna **370***b*. In addition, the top-left location of the display of the access terminal **106** may be used to determine whether a particular antenna **370***a*, **370***b*, or **370***c* is blocked. For example, depending on which way a user rotates the access terminal **106** to place it in portrait or landscape mode, a different physical portion of the access terminal **106** will be in the top-left corner relative to the user. The physical portion that is located in the top-left corner may be used in addition to the portrait or landscape orientation to determine which antenna is likely blocked by the user. In some aspects, a look-up table may be created with the phone orientation and/or top-left location as input in order to choose the best antenna for communication. For example, the processor/controller **320** may refer to the look-up table to determine the proper antenna to choose for a particular transmit and/or receive circuit based on the particular orientation and top-left location of the access terminal **106**. In some aspects, the processor/controller **320** may choose non-blocked antenna **370***b* for voice wakeup based on the orientation of the access terminal **106** and/or the portion of the access terminal that is located in the top-left corner. The non-blocked antenna **370***b* may be chosen for voice wakeup by referring to a look-up table. Upon wakeup, the access terminal **106** may transmit and receive

voice communications via transmit circuit **330***b* and receive circuit **340***b* using the non-blocked antenna **370***b*.

[0067] In some embodiments, the different transmit circuits **330***a*, **330***b* and receive circuits **340***a*, **340***b*, **340***c* of the access terminal **106** may be in different states at different points in time. For example, any of the receive and transmit circuits may be in an initialization state, an idle state, an access state, or a traffic or active state.

[0068] Upon power up, the receive and transmit circuits of the access terminal begin the initialization state. During the initialization state, the circuits may conduct system acquisition (ACQ) and synchronization. The receive and transmit circuits may then enter an idle state. While in the idle state, the access terminal **106** may periodically wake up from a sleep state to receive and monitor pages or other overhead information received over, for example, signaling and control channels. No data is transmitted by the access terminal during the idle state. During the access state, the receive and transmit circuits may attempt to access the system by sending messages or responding to requests from an access point **104**. In the traffic or active state, a communications link is established between the access terminal **106** and the access point **104**, and data is actively transmitted and received by the corresponding transmit circuit and receive circuit.

[0069] In some embodiments, the priority of the transmit circuits **330***a*, **330***b* and receive circuits **340***a*, **340***b* may change depending on the state (e.g., connected, idle, sleep, access, acquisition, and the like) of particular transmit and receive circuit. For example, if transmit circuit **330***b* and receive circuit **340***b* are in a sleep mode, the transmit circuit **330***a* and receive circuit **340***a* may have priority for the use of a particular antenna **370***a*, **370***b* and/or the switching circuitry **360** during the period in which the transmit circuit **330***b* and receive circuit **340***b* are asleep.

[0070] While the transmit circuits **330***a*, **330***b* and receive circuits **340***a*, **340***b* of the access terminal **106** are in the idle state, the processor/controller **320** may determine whether to switch antennas so that the access terminal **106** may use the antenna chosen by the processor/controller **320** upon waking up from the idle state. For example, the processor/controller **320** may choose a non-blocked antenna **370***b* for voice wakeup based upon an analysis of the performance characteristics of the antennas **370***a* and **370***b*. Upon wakeup, the access terminal **106** may receive voice communications using the non-blocked antenna **370***b* and the corresponding voice communications receive circuit **340***b*. In some embodiments, processor/controller **320** may be configured to determine the performance characteristics of the antennas **370***a* and/or **370***b* based on the receive power levels of the antennas **370***a* and/or **370***b* as detected by the receive circuits **340***a* and/or **340***b*. For example, the measurement circuitry **342***b* and **342***d* may be used to detect the receive power levels of antennas **370***a* and/or **370***b*. In one embodiment, the receive power levels may be obtained using receive automatic gain control (AGC) measurements from the receive circuits **340***a* and **340***b*. A determination may be made whether to switch one or more of the transmit circuits **330***a*, **330***b* and/or receive circuits **340***a*, **340***b* from transmitting/receiving via one of the antennas **370***a*, **370***b* to transmitting/receiving via the other one of the antennas **370***a*, **370***b*, based on the receive power levels of the antennas.

[0071] As described above, the transmit circuits **330***a*, **330***b* and receive circuits **340***a*, **340***b*, **340***c* may have different data transmission priorities or transmit power preferences. The preferences may be based on priority levels assigned to different radio access technologies associated with each of the plurality of receive circuits. For example, voice communications may have a higher priority than data only communications. The preferences may be assigned to and/or and adjusted for each of the receive circuits **340***a*, **340***b*, **340***c* and/or transmit circuits **330***a*, **330***b*, **330***c* based on a state of each of the plurality of receive circuits. For example, depending on the state of the transmit or receive circuit (initialization, connected, idle, access or traffic, acquisition, etc.), the priority of the transmit or receive circuits may change. As one example, the receive circuit **340***b* and the transmit circuit **330***b* may be configured to receive and transmit higher priority voice communications and thus may generally be preferred over the receive circuit **340***a* and transmit circuit **330***a*, which are configured to communicate according to a lower priority data only communications. If the receive circuit **340***b* and the transmit circuit **330***b* change to an idle state and the receive circuit **340***a* and transmit circuit **330***a* are in an active state, the data only receive circuit **340***a* and transmit circuit **330***a* may be preferred over the voice receive circuit **340***b* and transmit circuit **330***b*.

[0072] In some embodiments, if the processor/controller **320** determines that performance characteristics of antenna **370***a* (e.g., power level, receive AGC, SINR, SNR, and the like) indicate that antenna **370***a* reception of voice communications are weak, an antenna switching algorithm may be turned on so that the voice receive circuit **340***b* have use of a primary antenna **370***a* and a secondary antenna **370***b*. Accordingly, the transmit circuit **330***b* and receive circuit **340***b* that are configured to transmit and receive voice communications may take control of both antennas **370***a* and **370***b* in order to determine whether to switch from antenna **370***a* to **370***b*.

[0073] In some embodiments, the transmit or receive circuit according to the highest preference level may be granted use of the antenna switching algorithm. For example, the transmit or receive circuit according to the highest preference level may be switched to the second antenna **370***b* that has better performance characteristics. In this example, if the receive circuit **340***a* has a lower preference level than the first receive circuit (e.g., it has a lower priority RAT, it is in an idle state, etc.), the receive circuit **340***a* may be denied a request to switch to the second antenna **370***b* based on the lower preference level.

[0074] In some embodiments, the transmit circuits **330***a*, **330***b* and receive circuits **340***a*, **340***b* may share with each other information relating to the one or more performance characteristic of the antennas **370***a*, **370***b*. As one example, a voice communications receive circuit **340***b* may receive information from data only communications receive circuit **340***a* relating to a performance characteristic of antenna **370***b* as measured by the receive circuit **340***a*. The voice communications receive circuit **340***b* may use the information from the receive circuit **340***a* to determine whether to switch to antenna **370***b*.

[0075] In some embodiments, the antenna switching algorithm may include a fast switch-back mechanism may be used. For example, the processor/controller **320** may execute the antenna switching algorithm to cause the switching circuitry **360** to switch the second antenna **370***b* from the first receive circuit **340***a* to the receive circuit **340***b*. The processor/controller **320** may execute the fast switch-back mechanism of the antenna switching algorithm to cause the switching circuitry **360** to switch the antenna **370***a* back to receive

circuit **340***b* upon determining that performance of first receive circuit **340***b* is lower after the switch to antenna **370***b*.

[0076] In some embodiments, the switching of a transmit or receive circuit from one antenna to a second antenna may be scheduled in advance to avoid adversely affecting the communication of another transmit or receive circuit. For example, receive circuit **340***a* may be receiving critical information (e.g., packets, control information, synchronization information, etc.) via antenna **370***b*. The controller/processor **320** may schedule the switch of the receive circuit **340***b* to antenna **370***b* in advance so that the receive circuit **340***a* can complete reception of the critical information prior to the switch.

[0077] In some embodiments, when a transmit or receive circuit takes control of the switching circuitry **360** or algorithm, the transmit or receive circuit may start with a default antenna configuration or may use an existing antenna configuration. For example, a receive circuit **340***b* may be running the antenna switching algorithm (e.g., because it is active, it has preference or priority, etc.) and may select a particular antenna configuration, such as antenna **370***b* switched to receive circuit **340***b* and antenna **370***a* switched to receive circuit **340***a*. If the receive circuit **340***a* takes control of the antenna switching circuitry **360** or algorithm, it may start with a default antenna configuration (antenna **370***a* switched to receive circuit **340***b* and antenna **370***b* switched to receive circuit **340***a*), or it may continue to use the previous antenna configuration selected by receive circuit **340***b*.

[0078] FIG. **5** illustrates an example of a process **500** for determining whether to switch a transmit circuit and/or receive circuit in an idle state from communicating using a first antenna to using a second antenna. While the discussion below relates to receiving and transmitting voice communications, a person of skill in the art will recognize that the process **700** applies to receiving and transmitting other types of signals, such as data only communications. For example, transmit circuit **330***b* and receive circuit **340***b* may be configured to transmit and receive voice communications, and the processor/controller **320** may determine whether to switch from antenna **370***a* to antenna **370***b* for voice transmission and reception using transmit circuit **330***b* and receive circuit **340***b* upon wakeup of the access terminal **106**.

[0079] At block **502**, the transmit circuit **330***b* and/or receive circuit **340***b* that are configured to communicate according to a voice radio access technology are configured to initially wake up from an idle state and receive using the antenna **370***a*. No transmission takes place during the idle state. Antenna **370***a* may be referred to herein and in FIG. **5** as Ant**0**. At block **504**, the processor/controller **320**, for example, may determine whether a performance characteristic of a signal received using antenna **370***a* is below a threshold performance characteristic level. For example, as described above, performance characteristic metrics may include receive power levels, receive automatic gain control (AGC) measurements, signal to interference plus noise ratio (SINR), signal to noise ratio (SNR), and the like. The performance characteristic of the signal received using antenna **370***a* may be detected using the receive circuit **340***b* that is currently switched to antenna **370***a*. For example, the performance characteristic may include a power level measured using the receive circuit **340***b*. The measurement circuitry **342***d* may be used to detect the performance characteristic of the signal received using antennas **370***a*. The threshold performance characteristic level may be determined based on a level needed to support voice communications. For example, a threshold power level may be determined based on a power level that is sufficient to support voice communications. In this example, the threshold power level may be set to a level required to support reception of a page, such as from an AP.

[0080] At block **508**, if the determined performance characteristic of the signal received using antenna **370***a*, as detected by the receive circuit **340***b*, is not worse than the threshold level, the processor/controller **320** may determine that a switch is not required and may cause the access terminal **106** to remain asleep and wait for the next wakeup period to determine whether the receive performance characteristic level of a next signal using antenna **370***a* is worse than the threshold performance characteristic level.

[0081] At block **506**, if the processor/controller **320** determines that the performance characteristic level of the signal received using antenna **370***a*, as detected by the receive circuit **340***b*, is worse than the threshold performance characteristic level, the processor/controller **320** may consider the antenna **370***a* as being blocked. In response, the processor/controller **320** indicates that the voice communications receive circuit **340***b* needs to switch to antenna **370***b* for measurement of the performance characteristic level of the signal received by antenna **370***b*. Antenna **370***b* may be referred to herein and in FIG. **5** as Ant1.

[0082] At block **510**, a common manager determines whether to approve the switch. In some embodiments, the common manager is implemented using the processor/controller **320**. The common manager may determine whether a switch can occur based on the current configuration and/or operation of the access terminal **106**. For example, if the transmit circuit **330***a* and/or receive circuit **340***a* are performing a critical function using antenna **370***b*, such as currently receiving data via antenna **370***b*, the common manager may not allow the transmit circuit **330***b* and/or receive circuit **340***b* to be switched from antenna **370***a* to antenna **370***b* for measurement. If the switch to antenna **370***b* is not approved, the process returns to block **502** and no switch occurs. Upon approval of the switch to antenna **370***b*, the processor/controller **320** causes the switching circuitry **360** to switch the receive circuit **340***b* and/or transmit circuit **330***b* to antenna **370***b* so that the receive circuit **340***b* can measure the performance characteristic level of the signal received by antenna **370***b* at block **512**. For example, the measurement circuitry **342***d* may be used to detect the power level or interference level of the signal received using antennas **370***b*.

[0083] At block **514**, the processor/controller **320** determines whether the difference between the two performance characteristic levels of antenna **370***a* and **370***b* is greater than a threshold difference. The threshold difference may be provided to ensure switching is not done unnecessarily. For example, it may only be necessary to switch the transmit circuit **330***b* and/or receive circuit **340***b* from antenna **370***a* to antenna **370***b* if the difference between the two performance characteristic levels is large enough. For example, the processor/controller **320** may be configured to switch only if the difference between two power levels of the antennas **370***a* and **370***b* is greater than, for example, 10 dB. In some embodiments, the threshold difference may depend on a variety of factors for an imbalance in receive performance characteristic. The threshold may be a function of various receive or transmit characteristics. For example, as the lower of two receive power levels approaches a receive power floor, the threshold to switch may be decreased (less difference

between the two power levels is required to trigger a switch to the other antenna). In one aspect, the receive power floor may correspond to a thermal noise limit. The threshold difference may be further based on interference levels and thermal levels. A person of skill in the art will recognize that any other threshold difference may be used to determine whether to switch antennas.

[0084] If the difference between the performance characteristic levels is above the threshold difference as determined at block **514**, the processor/controller **320** causes the transmit circuit **330***b* and/or receive circuit **340***b* to remain switched to antenna **370***b* so that the transmit circuit **330***b* and/or receive circuit **340***b* are configured to use antenna **370***b* upon wakeup from the idle state, upon which the process **500** continues to block **516**. On the other hand, if the difference between the performance characteristic levels is not above the threshold difference as determined at block **514**, the processor/controller **320** causes the transmit circuit **330***b* and/or receive circuit **340***b* to switch back to antenna **370***a* so that antenna **370***a* is used upon wakeup from the idle state, and the process **500** returns to block **502**.

[0085] In the event the transmit circuit **330***b* and/or the receive circuit **340***b* remain switched to antenna **370***b*, the process **500** continues to block **516** in order to determine whether to switch from antenna **370***b* to antenna **370***a* in the event the transmit circuit **330***b* and/or receive circuit **340***b* are configured to wake up from an idle state and transmit and/or receive using the antenna **370***b*.

[0086] FIG. **6** illustrates another example of a process **600** for determining whether to switch a transmit circuit and/or receive circuit from using a first antenna for communications to using a second antenna. While the discussion below relates to receiving and transmitting voice communications, a person of skill in the art will recognize that the process **700** applies to receiving and transmitting other types of signals, such as data only communications. For example, upon wakeup of the access terminal **106**, the processor/controller **320** may determine whether to switch transmit circuit **330***b* and receive circuit **340***b* from antenna **370***a* to antenna **370***b* for voice transmission and reception. At block **602**, a transmit circuit **330***b* and/or receive circuit **340***b*, which are configured to communicate according to a voice radio access technology, are configured to initially wake up from an idle state and receive using antenna **370***a*. Antenna **370***a* may be referred to herein and in FIG. **6** as AntO.

[0087] At block **604**, the processor/controller **320** may determine whether a performance characteristic level (e.g., power level, AGC level, SINR, SNR, and the like) of a signal received using antenna **370***a* is below a threshold performance characteristic level. The performance characteristic level of the signal received using antenna **370***a* may be detected using the receive circuit **340***b* that is currently switched to antenna **370***a*. For example, the measurement circuitry **342***d* may be used to detect the performance characteristic level of the signal received using antennas **370***a*. As described above, the threshold performance characteristic level may be determined based on a performance characteristic level that is sufficient to support voice communications. At block **608**, if it is determined that the performance characteristic level of the received signal, as detected by the receive circuit **340***b*, is not worse than the threshold, the processor/controller **320** determines that a switch is not required. The processor/controller **320** instructs the access terminal **106** to remain asleep and wait for the next wakeup period to determine whether the receive performance characteristic level is worse than the threshold performance characteristic level.

[0088] At block **606**, if the processor/controller **320** determines that the performance characteristic level of the received signal using antenna **370***a*, as detected by the receive circuit **340***b*, is worse than the threshold performance characteristic level, the processor/controller **320** may consider the antenna **370***a* as being blocked. As a result, the processor/controller **320** causes the switching circuitry **360** to switch transmit circuit **330***b* and/or receive circuit **340***b* to antenna **370***b*. Upon being switched to antenna **370***b*, the transmit circuit **330***b* and/or receive circuit **340***b* are configured to transmit and/or receive voice communications using antenna **370***b* upon wakeup from the idle state. Antenna **370***b* may be referred to herein and in FIG. **6** as ANTI.

[0089] As illustrated in FIG. **6**, the process may be repeated, starting at block **610**, in order to determine whether to switch from antenna **370***b* to antenna **370***a* in the event the transmit circuit **330***b* and/or receive circuit **340***b* are configured to transmit and/or receive using the antenna **370***b* upon waking up from an idle state.

[0090] FIG. **7** illustrates an example of a process **700** for determining whether to switch a first receive circuit from demodulating received signals using a first antenna to demodulating received signals using a second antenna. While the discussion below relates to demodulation of voice communications using receive circuit **340***b* and the antenna **370***a* or **370***b*, a person of skill in the art will recognize that the process **700** applies to demodulating other types of signals, such as data only communications. At block **702**, the receive circuit **340***b*, which is configured to communicate according to a voice radio access technology, is configured to initially wake up from an idle state and receive using antenna **370***a*. Antenna **370***a* may be referred to herein and in FIG. **7** as Ant**0**. At block **704**, the receive circuit **340***b*, which may be referred to herein an in FIG. **7** as Rx**0**, is configured to demodulate voice communication signals using antenna **370***a*.

[0091] At block **706**, the processor/controller **320**, for example, may determine whether a performance characteristic level (e.g., power level, AGC level, SINR, SNR, and the like) of a signal received using antenna **370***a* is below a first threshold performance characteristic level. The performance characteristic level of the signal received using antenna **370***a* may be detected using the receive circuit **340***b* that is currently switched to antenna **370***a*. For example, the measurement circuitry **342***d* may be used to detect the performance characteristic level of the signal received using antennas **370***a*. The first threshold performance characteristic level may be determined based on a performance characteristic level that is sufficient to support voice communications. At block **708**, if the determined performance characteristic level of the signal received using antenna **370***a*, as detected by the receive circuit **340***b*, is not below the first threshold, the processor/controller **320** may determine that a switch to a different antenna is not required. As a result, the processor/controller **320** may cause the access terminal **106** to remain asleep and may schedule the next wakeup time according to a normal predetermined wakeup schedule.

[0092] At block **710**, if the processor/controller **320** determines that the performance characteristic level of the signal received using antenna **370***a*, as detected by the receive circuit **340***b*, is below the first threshold performance characteristic level, the processor/controller **320** may schedule the next

wakeup time of the access terminal **106** at an earlier time than the next normal wakeup time according to the normal predetermined wakeup schedule. Scheduling the next wakeup time to be earlier than the scheduled wakeup time may help to ensure that the amount of time for which the access terminal **106** is awake is long enough for the access terminal **106** to sample the performance characteristic measurements from both antennas **370***a* and **370***b*.

[0093] At block **712**, receive circuit **340***b* wakes up from an idle state at the earlier wake up time scheduled at block **710**. At block **714**, the processor/controller **320** may determine whether a performance characteristic level of a received signal using antenna **370***a* is below a second threshold performance characteristic level. The receive circuit **340***b*, which continues to be switched to antenna **370***a*, may be used to detect the performance characteristic level of the signal received using antenna **370***a*. In some embodiments, the second threshold performance characteristic level may be determined based on a performance characteristic level that is sufficient to support voice communications, similar to the first threshold performance characteristic level. In some embodiments, the first threshold performance characteristic level is the same as the second threshold performance characteristic level. In some embodiments, the second threshold performance characteristic level may be set at a higher or lower performance characteristic level relative to the first threshold performance characteristic level. For example, the first threshold may be a higher performance characteristic level relative to the second threshold, and may be set to indicate that the performance characteristic level of the received signal is approaching levels that may require an antenna switch from antenna **370***a* to antenna **370***b*. In this example, the second threshold may be lower (e.g., a lower power level) and may be set to indicate that the antenna **370***a* is blocked and a switch to antenna **370***b* is needed. In some embodiments, the performance characteristic may include interference or noise levels (SINR, SNR, and the like), and the second threshold may be higher and set to indicate that the antenna **370***a* is experiencing high levels of interference that require a switch to antenna **370***b*.

[0094] At block **716**, if the determined performance characteristic level of the signal received using antenna **370***a*, as detected by the receive circuit **340***b*, is not below the second threshold, the processor/controller **320** may determine that a switch is not required and may cause the receive circuit **340***b* to continue demodulating the received voice communication signals using antenna **370***a*.

[0095] At block **718**, if the processor/controller **320** determines that the performance characteristic level of the signal received using antenna **370***a*, as detected by the receive circuit **340***b*, is worse than the threshold performance characteristic level, the processor/controller **320** may consider the antenna **370***a* as being blocked. In response, the processor/controller **320** indicates that the voice communications transmit circuit **330***b* and/or receive circuit **340***b* needs to switch to antenna **370***b* for measurement of the performance characteristic level of the signal received by antenna **370***b*. Antenna **370***b* may be referred to herein and in FIG. **5** as Antl. At block **720**, the processor/controller **320** may determine whether to switch to antenna **370***b*. For example, a common manager may be used to determine whether to approve the switch. In some embodiments, the common manager is implemented using the processor/controller **320**. The common manager may determine whether a switch can occur based on the current configuration and/or operation of the access terminal **106**. For example, if the transmit circuit **330***a* and/or receive circuit **340***a* are performing a critical function using antenna **370***b*, such as currently receiving data via antenna **370***b*, the common manager may not allow the transmit circuit **330***b* and/or receive circuit **340***b* to be switched from antenna **370***a* to antenna **370***b* for measurement. In some embodiments, if the switch to antenna **370***b* is not approved, the process may not perform a switch and the receive circuit **340***b* continues to demodulate the received signals using antenna **370***a*.

[0096] In some embodiments, if the switch to antenna **370***b* is not approved or is not needed, the transmit circuit **330***b* and/or receive circuit **340***b* may use information regarding the use of antenna **370***b* as used by the other transmit circuit **330***a* and receive circuit **340***a* using a different radio access technology than that used by transmit circuit **330***b* and receive circuit **304***b*. For example, details regarding data only communications received by receive circuit **340***a* using antenna **370***b* may be analyzed by transmit circuit **330***b* and/or receive circuit **340***b*, in addition to the information collected by the receive circuit **340***b* regarding signals received using antenna **370***a*, to determine whether the transmit circuit **330***b* and/or receive circuit **340***b* will switch to antenna **370***b*. At block **732**, the processor/controller **320** and/or the transmitter **330***b* and receiver **340***b* determines whether the transmitter **330***b* and receiver **340***b* will be switched to antenna **370***b* based on the information received from the transmitter **330***a* and/or receiver **340***a*.

[0097] At block **734**, the processor/controller **320** and/or the transmitter **330***b* and receiver **340***b* determines that a switch is not needed and the receiver **340***b* continues to demodulate received signals using antenna **370***a*. For example, the performance characteristics of antenna **370***b* as used by the transmit circuit **330***a* and/or receive circuit **340***a* may be worse than the performance characteristics of antenna **370***a* as used by the transmit circuit **330***b* and/or receive circuit **340***b*. As a result, a switch of the transmit circuit **330***b* and/or receive circuit **340***b* to antenna **370***b* for demodulation of the received signals is not beneficial for operation of the access terminal **106**. At block **736**, the processor/controller **320** and/or the transmitter **330***b* and receiver **340***b* determines that a switch is needed based on the information regarding antenna **370***b* received from the transmitter **330***a* and/or receiver **340***a*. For example, the processor/controller **320** and/or the transmitter **330***b* and receiver **340***b* may indicate to the switching circuitry **360** and/or the common manager that a switch of the transmitter **330***b* and/or receiver **340***b* from antenna **370***a* is needed to antenna **370***b*. After the switch from antenna **370***a* to **370***b* occurs, the receive circuit **340***b* begins demodulating received signals using antenna **370***b* at block **738**.

[0098] Returning to block **720**, upon approval of the switch to antenna **370***b*, the processor/controller **320** and/or the common manager causes the switching circuitry **360** to switch the receive circuit **340***b* and/or transmit circuit **330***b* to antenna **370***b* so that the receive circuit **340***b* can measure the performance characteristic level of the signal received by antenna **370***b* at block **722**. For example, the measurement circuitry **342***d* may be used to detect a power level or interference level of the signal received using antennas **370***b*.

[0099] At block **724**, the processor/controller **320** determines whether the difference between the two performance characteristic levels of antenna **370***a* and **370***b* is greater than a threshold difference. The threshold difference may be pro-

vided to ensure switching is not done unnecessarily. For example, it may only be necessary to switch the transmit circuit **330***b* and/or receive circuit **340***b* from antenna **370***a* to antenna **370***b* if the difference between the two performance characteristic levels is large enough. In some embodiments, the threshold difference may depend on a variety of factors for an imbalance in receive performance characteristic. The threshold may be a function of various receive or transmit characteristics. For example, as the lower of two receive power levels approaches a receive power floor, the threshold to switch may be decreased (less difference between the two power levels is required to trigger a switch to the other antenna). In one aspect, the receive power floor may correspond to a thermal noise limit. The threshold difference may be further based on interference levels and thermal levels. A person of skill in the art will recognize that any other threshold difference may be used to determine whether to switch antennas.

[0100] At block **726**, if the difference between the performance characteristic levels is above the threshold difference (as determined at block **724**), the processor/controller **320** causes the transmit circuit **330***b* and/or receive circuit **340***b* to remain switched to antenna **370***b* so that the receive circuit **340***b* is configured to use antenna **370***b* for demodulating the received signals. On the other hand, at block **728**, if the difference between the performance characteristic levels is not above the threshold difference (as determined at block **724**), the processor/controller **320** causes the transmit circuit **330***b* and/or receive circuit **340***b* to switch back to antenna **370***a*. For example, the processor/controller **320** and/or the transmitter **330***b* and receiver **340***b* may indicate to the switching circuitry **360** and/or the common manager that the transmitter **330***b* and/or receiver **340***b* needs to be switched back from the antenna **370***b* to the antenna **370***a*. After the switch from antenna **370***b* to **370***a* occurs, the receive circuit **340***b* begins demodulating received signals using antenna **370***a* at block **730**.

[0101] In some embodiments, transmit circuit **330***a* and/or receive circuit **340***a* configured to communicate using a first radio access technology (e.g., voice communications) may be configured to switch antennas based on communications from transmit circuit **330***b* and/or receive circuit **340***b* configured to communicate using a second radio access technology (e.g., data only communications). The transmit circuit **330***a* and/or receive circuit **340***a* may be in an idle state, during which no data is transmitted, while transmit circuit **330***b* and/or receive circuit **340***b* may be in an active state. Because the transmit circuit **330***b* and/or receive circuit **340***b* are in an active state, data is being transmitted and received, resulting in more information being available for determining antenna performance. This additional information may be used to determine the configuration of the switching circuitry **360**. For example, details regarding data only communications using transmit circuit **330***b* and/or receive circuit **340***b* may be used by transmit circuit **330***a* and/or receive circuit **340***a* in addition to the voice communications information determined above with respect to FIGS. **5-7** to determine whether the transmit circuit **330***a* and/or receive circuit **340***a* will switch to another antenna.

[0102] For example, transmit circuit **330***b* and/or receive circuit **340***b*, which are in an active state, may be configured to communicate according to a data only radio access technology and may include a primary radio frequency chain (RF chain) and a secondary RF chain. One or more antennas in the primary or secondary RF chain may also be shared by the transmit circuit **330***a* and/or receive circuit **340***a*, which are in an idle state and are configured to communicate according to the voice communications radio access technology. The processor/controller **320** may detect performance characteristics of a shared antenna based on the communications being transmitted and received via the shared antenna by the active data only communications transmit circuit **330***b* and receive circuit **340***b*. The performance characteristics detected by the processor/controller **320** may be used to determine whether or not the shared antenna is blocked, and thus may be used to determine whether to switch the transmit circuit **330***a* and/or receive circuit **340***a* to a different circuit for when the circuits wake up from the idle state.

[0103] In some embodiments, the performance characteristics of the shared antenna may include a power differential between the primary RF chain and the secondary RF chain. For example, if the power differential between the primary RF chain and the secondary RF chain is large (indicating that the receive or transmit power level of one of the RF chains is higher than the other), it may be determined that the antenna mapped to the RF chain with the lower receive or transmit power level is blocked, or at least has a lower performance level. In some embodiments, the performance characteristics of the shared antenna may include past power level measurements of each of the primary RF chain and secondary RF chain. In some embodiments, the performance characteristics may include automatic gain control (AGC) measurements, signal to interference plus noise ratio (SINR), signal to noise ratio (SNR), and the like. For example, a difference in interference levels between the primary RF chain and the secondary RF chain may be monitored in order to determine whether to switch antennas.

[0104] Based on the detected performance characteristics of the shared antenna, the voice communications transmit circuit **330***b* and/or receive circuit **340***b* may determine (e.g., under the control of the processor/controller **320**) that a switch from the shared antenna to a different antenna is necessary because, for example, the shared antenna is blocked or the performance level is too low. Accordingly, the transmit circuit **330***b* and/or receive circuit **340***b*, upon wakeup, may use the new antenna with better transmission and/or reception performance. In some aspects, the transmit circuit **330***b* and/or receive circuit **340***b* communicating according to a voice communications radio access technology may also be in an active state and may switch antennas so that the circuits can actively transmit and/or receive using the new antenna.

[0105] In some embodiments, one of the pairs of receive circuits and transmit circuits may have control of the switching circuitry **360** based on the performance characteristics (e.g., power level, AGC level, SINR, SNR, and the like) determined at the various antennas **370***a* and **370***b*. FIG. **8** illustrates an example of coordinating control of the switching circuitry **360** among the various transmit and receive circuits. At block **802**, the processor/controller **320** may determine whether the performance characteristic level of a signal received by voice communications receive circuit **340***b* via antenna **370***a* is equal to or above a threshold performance characteristic level. At block **804**, if the performance characteristic level of a received signal is equal to or above a threshold performance characteristic level, the receive circuit **340***a* and transmit circuit **330***a* may be given control of the switching circuitry **360** for controlling which antennas are used by the receive circuit **340***a* and the transmit circuit **330***a*. As a

result, the data only communications receive circuit **340***a* and transmit circuit **330***a* can operate using an antenna switching algorithm by using two of the three available antennas **370***a*, **370***b*, or **370***c*. In this example, if the performance characteristic level of the signal is above the threshold performance characteristic level, the voice communications receive circuit **340***b* and/or transmit circuit **330***b* will wake up from the idle sleep state using the secondary antenna being used by the data only communications receive circuit **340***a* and transmit circuit **330***a*.

[0106] At block **806**, if the performance characteristic level of a signal received using antenna **370***a* and voice communications receive circuit **340***b* is worse than the threshold performance characteristic level, the voice communications receive circuit **340***b* and/or transmit circuit **330***b* may be given control of the switching circuitry **360** for the duration of a hold period. For example, the hold period may be a longer duration than the period for which the receive circuit **340***b* and/or the transmit circuit **330***b* are awake. In this example, the voice communications receive circuit **340***b* and/or transmit circuit **330***b* may wake up from the idle sleep state using the primary antenna being used by the data only communications receive circuit **340***a* and transmit circuit **330***a*. At block **808**, when the hold period is over and the voice communications receive circuit **340***b* and/or transmit circuit **330***b* go back to the idle sleep state, control of the switching circuitry **360** may be released to the data only communications receive circuit **340***a* and transmit circuit **330***a*. When the performance characteristic level of a signal received using antenna **370***a* and voice communications receive circuit **340***b* is worse than the threshold performance characteristic level, the data only communications receive circuit **340***a* and/or transmit circuit **330***a* do not use the antenna switching algorithm and thus do not switch between use of the antennas **370***a* and/or **370***b*. In order to avoid affecting the voice communications idle sleep and awake timeline, when the voice communications receive circuit **340***b* and/or transmit circuit **330***b* determines that a switch to another antenna is needed at a particular wakeup time n+1, the voice communications circuits may make the switch request at the end of the prior wakeup time n, and then may go to sleep until the wakeup time n+1. In some embodiments, when the voice communications receive circuit **340***b* and/or transmit circuit **330***b* release control of the switching circuitry **360**, the voice communications circuits may allow the data only communications receive circuit **340***a* and transmit circuit **330***a* take control for at least one wakeup cycle so that data only communications circuits can operate using the antenna switching algorithm and thus may select the proper antenna **370***a* and/or **370***b*.

[0107] In some embodiments, a first transmitter and/or first receiver in traffic or active state communicating using a first radio access technology may be configured to compare performance characteristics of a first antenna used by the first transmitter and/or first receiver to performance characteristics of a second antenna used by a second transmitter and/or second receiver in an active state communicating using a second radio access technology. For example, a transmit circuit **330***a* and/or receive circuit **340***a* may be in an active state and may be configured to communicate using antenna **370***a* according to a voice communications radio access technology. Further, transmit circuit **330***b* and/or receive circuit **340***b*, **340***c* may be in an active state and may be configured to communicate according to a data only radio access technology using a primary and secondary antenna. The transmit circuit **330***a* and/or receive circuit **340***a* may periodically detect (e.g., using measurement circuitry **342***a* and **342***b* and/or the processor/controller **320**) performance characteristics of antenna **370***b* and/or **370***c* used by the transmit circuit **330***b* and/or receive circuits **340***b*, **340***c*. For example, the antenna **370***b* may be the primary antenna used by the data only communications transmit circuit **330***b* and receive circuit **340***b*, and the voice communications transmit circuit **330***a* and/or receive circuit **340***a* may periodically detect the performance characteristics of the primary antenna **370***b*. The detected performance characteristics of the primary antenna **370***b* may be compared to performance characteristics of the antenna **370***a* in order to determine whether to switch the voice communications transmit circuit **330***a* and/or receive circuit **340***a* to the antenna **370***b*. In some aspects, the performance characteristics may include a power level (e.g., obtained using received AGC), signal to interference plus noise ratio (SINR), signal to noise ratio (SNR), and the like. The performance characteristics of the antennas **370***a* and **370***b* may be compared to a threshold in order to determine whether a switch is necessary. For example, if the difference in receive or transmit power levels between the antenna **370***a* and antenna **370***b* is above a threshold, the processor/controller **320** may instruct the voice communications transmit circuit **330***a* and/or receive circuit **340***a* to switch to the antenna **370***b*. The threshold may be determined to ensure switching is not done unnecessarily. For example, it may only be necessary to switch the first transmitter and/or receiver if the difference between the two power levels is large enough.

[0108] In some embodiments, the voice communications receive circuit **340***a* may be configured to detect (e.g., using measurement circuitry **342***b* and/or the processor/controller **320**) one or more forward link (FL) performance metrics of a forward link channel being received by the antenna **370***a* for which the receive circuit **340***a* is currently switched. In some embodiments, the FL performance metrics may include a setpoint, frame erasures, and the like. If the FL performance metrics indicate that the performance of the antenna **370***a* is below an acceptable performance limit, the receive circuit **340***a* may be switched to a second antenna. For example, if the setpoint is close to a maximum setpoint threshold, or the frame erasure rate is above a maximum frame erasure threshold, the receive circuit **340***a* may request that the processor/controller **320** cause the switching circuitry **360** to switch the receive circuit **340***a* to antenna **370***b*. In some aspects, if the performance of the antenna **370***b* is determined to be below the acceptable performance limit after the switch, the processor/controller **320** may determine that the channel itself is bad. In such aspects, the receiver may or may not be switched back to the antenna **370***a*.

[0109] In some embodiments, if both the voice communications transmit circuit **330***a* and the data only communications transmit circuit **330***b* are actively transmitting while in the traffic or active state, a synchronized transmission blanking scheme may be provided in order for both the transmit circuit **330***a* and the transmit circuit **330***b* to switch antennas. The synchronized transmission blanking scheme allows coordination of the two transmit circuits **330***a* and **330***b* according to the different radio access technologies (e.g., voice and data only communications) to refrain from transmitting signals during the antenna switching.

[0110] In some embodiments, the transmit circuit **330***b* and/or the receive circuit **340***b* configured to communicate

according to a data only radio access technology may be in an idle state. Further, the transmit circuit **330***a* and/or the receive circuit **340***a* configured to communicate according to a voice communications radio access technology may be in an active state. The voice communications transmit circuit **330***a* and/or receive circuit **340***a* may use a primary antenna **340***a* and a secondary antenna **340***b* in order to implement the antenna switching algorithm. For each wakeup period, the data only communications receive circuit **340***b* may connect to the secondary antenna **340***b* and may detect whether an idle measurement of the secondary antenna **340***b* being used by the voice communications receive circuit **340***a* is too weak for receiving a page. If the idle measurement is too weak for page reception, the processor/controller **320** may determine that the secondary antenna **340***b* is blocked. The data only communications transmit circuit **330***b* and/or the receive circuit **340***b* may request a common manager to cause the switching circuitry **360** to switch the circuit **330***b* and/or **340***b* to another antenna that is not blocked. In some embodiments, the common manager is implemented using the processor/controller **320**. The common manager may inform the voice communications transmit circuit **330***a* and/or receive circuit **340***a* that the antenna switching algorithm may not be disabled and that the circuits **330***a* and/or **340***a* must continue to communicate using the primary and secondary antennas.

[0111] As described above, an access state includes the time when the access terminal **106** attempts access over an access channel to a network. When attempting access to the network, the access terminal **106** may transmit one or more access probes to an access point **104**. In some embodiments, the transmit circuit **330***a* and/or the receive circuit **340***a* configured to communicate according to a voice communications radio access technology may be in an access state, while the transmit circuit **330***b* and/or the receive circuit **340***b* configured to communicate according to a data only radio access technology may be in an idle state. In other embodiments, the data only communications transmit circuit **330***b* and/or the receive circuit **340***b* may be in an access state, while the voice communications transmit circuit **330***a* and/or the receive circuit **340***a* may be in an idle state. In either of these embodiments, before transmission of the one or more access probes begins, measurements may be obtained for a currently used antenna and for a subsequently switched-to antenna in order to choose the better antenna for access. For example, if the voice communications transmit circuit **330***a* and/or the receive circuit **340***a* are in an access state and the data only communications transmit circuit **330***b* and/or the receive circuit **340***b* are in an idle state, measurements may be taken from the antenna **370***a* currently being used by voice communications transmit circuit **330***a* and/or the receive circuit **340***a* prior to an access probe being sent. Further, prior to the access probe being sent by the transmit circuit **330***a*, the transmit circuit **330***a* and/or receive circuit **340***a* may switch to and take measurements of antenna **370***b*. In response, the transmit circuit **330***a* and/or receive circuit **340***a* may determine (e.g., under control of the processor/controller **320**) the antenna with the better performance based on the measurements. The measurements may include transmit or receive power measurements, transmit or receive automatic gain control (AGC) measurements, signal to interference plus noise ratio (SINR), signal to noise ratio (SNR), and the like.

[0112] In some embodiments, if a probe sequence fails, either of the transmit circuits **330***a*, **330***b* and receive circuits **340***a*, **340***b* may measure performance of a first antenna being used, and then may switch from the first antenna to a second antenna for performance measurements before the next probe sequence begins. In some embodiments, either of the transmit circuits **330***a*, **330***b* and receive circuits **340***a*, **340***b* may measure performance of a first antenna being used, and then may switch from the first antenna to a second antenna for performance measurements between transmission of each of a plurality of probes that are sent for access to the network. In some embodiments, the transmit and receive circuit that are in the access state may turn on the antenna switching algorithm, and may only switch antennas between each of the probes.

[0113] In some embodiments, if the voice communications transmit circuit **330***a* and receive circuit **340***a* are asleep while in the idle state, and the data only communications transmit circuit **330***b* and receive circuit **340***b* are in the traffic or active state, the data only communications transmit circuit **330***b* and receive circuit **340***b* may operate its own the antenna switching algorithm, and the voice communications transmit circuit **330***a* and receive circuit **340***a* may follow the switching decision data only communications circuitry.

[0114] As described above, transmit circuits **330***a*, **330***b* and receive circuits **340***a*, **340***b* may operate according to a priority scheme. For example, a first transmit circuit **330***a* may have priority over a second transmit circuit **330***b*. The priorities of each transmit circuit **330***a*, **330***b* and/or receive circuits **340***a*, **340***b* may change during operation, for example, depending on the type of data being transmitted and the type of radio access technology for that data. For example, if transmit circuit **330***a* is transmitting voice communications data during a time period in which another transmit circuit **330***b* is transmitting data only (e.g., LTE, EV-DO), the transmit circuit **330***a* may be assigned a higher priority that the other transmit circuit **330***b* during this time interval. During another time interval, the opposite could occur. The transmit circuit **330***a* with the highest priority may be able to transmit using an antenna that will provide the highest performance. The switching configuration or mapping between transmit circuits **330***a*, **330***b* and receive circuits **340***a*, **340***b* with the antennas **370***a* and **370***b* may therefore depend on which transmit circuit or receive circuit has priority.

[0115] It should be appreciated that the principles described above with reference to FIGS. **4-8** may be applied similarly where the number of transmit and receive circuits, as well as antennas, is greater than or less than the number described herein. Accordingly, the processor/controller **320** may be configured to switch multiple transmit circuits **330***a*, **330***b*, and **330***n* based on the performance characteristics of various antennas **370***a*, **370***b*, and **370***n*.

[0116] FIG. **9**A shows a flowchart of an implementation of an exemplary method **900** implemented by a wireless communication apparatus in accordance with some embodiments. The method **900** may be implemented at a wireless communication apparatus implemented as an access terminal **106**, for example. Although the method **900** is described below with respect to elements of the access terminal **106**, those having ordinary skill in the art will appreciate that other components may be used to implement one or more of the blocks described herein.

[0117] At block **902**, a first receive circuit is switched from receiving wireless communications via a first antenna to receiving wireless communications via a second antenna based on one or more performance characteristics of at least one of the first antenna and the second antenna, wherein at least the first receive circuit and a second receive circuit of the

wireless communication apparatus are each configured to simultaneously receive, with respect to the other, wireless communications from a different one of at least two networks relating to different radio access technologies. In one aspect, a processor/controller **320** may control switching circuitry **360** to perform the switching.

[0118] In some embodiments, the method further comprises receiving wireless communications using the first receive circuit according to a first radio access technology and receiving wireless communications using the second receive circuit according to a second radio access technology, and wherein first antenna and the second antenna are configured to be used by both the first receive circuit and the second receive circuit and wherein a third antenna is configured to be used only by the third receive circuit. In some embodiments, the first radio access technology includes data only communications and the second radio access technology includes voice only communications. In some embodiments, the method further comprises sensing proximity of an object relative to each of the first antenna and the second antenna, wherein the one or more performance characteristics of the first antenna and the second antenna is determined based at least in part on the sensed proximity of the object. In some embodiments, the selectively switching from receiving wireless communications via a first antenna to receiving wireless communications via a second antenna is based on a proximity of the first antenna to the object as indicated by the sensed proximity.

[0119] In some embodiments, the method further comprises selectively switching from receiving wireless communications via a first antenna to receiving wireless communications via a second antenna based on an orientation of the wireless communication device.

[0120] In some embodiments, the method further comprises selectively switching from receiving wireless communications via a first antenna to receiving wireless communications via a second antenna based on preferences for each of the plurality of receive circuits, the preferences based on priority levels assigned to different radio access technologies associated with each of the first receive circuit and the second receive circuit. In some embodiments, the different radio access technologies associated with each of the first receive circuit and the second receive circuit include voice only communications and data only communications, and wherein voice only communications have a higher priority than data communications.

[0121] In some embodiments, the one or more performance characteristics of the first antenna and the second antenna is determined based at least in part on a receive power level of each of the first antenna and second antenna, and the method further comprises switching the first receive circuit from receiving wireless communications via the first antenna to receive wireless communications via the second antenna in response to detecting a first receive power level of the first antenna is less than a first threshold power level. As described above, other performance characteristic may include automatic gain control (AGC) measurements, signal to interference plus noise ratio (SINR), signal to noise ratio (SNR), and the like. If interference is used as the performance characteristics, the comparison may switch the first receive circuit from receiving wireless communications via the first antenna to receive wireless communications via the second antenna in response to detecting a first interference level of the first antenna is more than a first threshold interference level.

[0122] In some embodiments, the one or more performance characteristics of the first antenna and the second antenna is determined based at least in part on a receive power level of each of the first antenna and second antenna, and the method further comprises switching the first receive circuit from receiving wireless communications via the first antenna to receive wireless communications via the second antenna in response to detecting: a first receive power level of the first antenna is less than a threshold power level; and a difference between the second receive power level and the first receive power level is greater than a threshold difference. Other performance characteristic may include automatic gain control (AGC) measurements, signal to interference plus noise ratio (SINR), signal to noise ratio (SNR), and the like. If interference is used as the performance characteristics, the comparison may switch the first receive circuit from receiving wireless communications via the first antenna to receive wireless communications via the second antenna in response to detecting a first interference level of the first antenna is more than a first threshold interference level and the difference between a second interference level and the first interference level is greater than a threshold difference.

[0123] In some embodiments, the method further comprises selectively switching from receiving wireless communications via a first antenna to receiving wireless communications via a second antenna during an idle state of the first receive circuit.

[0124] In some embodiments, the second receive circuit is configured to receive wireless communications via the first antenna and the second antenna, and the method further comprises detecting performance characteristics of the first antenna and the second antenna based on the wireless communications received using the second receive circuit, and selectively switching the first receive circuit from receiving wireless communications via the first antenna to receive wireless communications via the second antenna based on the detected performance characteristics. In some embodiments, the performance characteristics include a power differential between the first antenna and the second antenna. Other performance characteristic may include differentials in automatic gain control (AGC) measurements, signal to interference plus noise ratio (SINR), signal to noise ratio (SNR), and the like. In some embodiments, the method further comprises receiving wireless communications using the first receive circuit according to a first radio access technology, receiving wireless communications using the second receive circuit according to a second radio access technology, wherein the first receive circuit is in an idle state and the second receive circuit is in an active state. In some embodiments, the method further comprises receiving wireless communications using the first receive circuit according to a first radio access technology, receiving wireless communications using the second receive circuit according to a second radio access technology, wherein the first receive circuit is in an active state and the second receive circuit is in an active state.

[0125] In some embodiments, the second receive circuit is configured to receive wireless communications via the second antenna, and the method further comprises detecting performance characteristics of the second antenna based on the wireless communications transmitted and received using the second receive circuit, comparing the detected performance characteristics of the second antenna with performance characteristics of the first antenna, and selectively switching the first receive circuit from receiving wireless

communications via the first antenna to receive wireless communications via the second antenna based on the comparison.

[0126] In some embodiments, the one or more performance characteristics of the first antenna and the second antenna include one or more downlink performance metrics. In some embodiments, the one or more downlink performance metrics of the first antenna include at least one of a setpoint and frame erasures.

[0127] FIG. **9**B shows a flowchart of an implementation of an exemplary method **902** detailing block **902** illustrated in FIG. **9**A in brackets. The method **902** may be implemented at a wireless communication apparatus implemented as an access terminal **106**, for example. Although the method **902** is described below with respect to elements of the access terminal **106**, those having ordinary skill in the art will appreciate that other components may be used to implement one or more of the blocks described herein.

[0128] At block **904**, the method **902** begins by determining the performance characteristics of a first antenna. For example, the receive power level of the first antenna may be obtained by measuring the receive automatic gain control (AGC) of the first antenna using the receive circuit **340***a*, **340***b*, or **340***n* that is currently switched to the first antenna. Other performance characteristic that may be measured may include automatic gain control (AGC) measurements, signal to interference plus noise ratio (SINR), signal to noise ratio (SNR), and the like. The measurement circuitry **342***b* and **342***d* may be used to detect the performance characteristic level of the signal received using the first antenna. A person of skill in the art will recognize that the transmit power level, AGC, SINR, or SNR of the first antenna may also be measured using the transmit circuit **330***a*, **330***b*, or **330***n* that is currently switched to the first antenna in order to determine the performance characteristics of the first antenna. As described above, factors affecting the performance characteristics of the first antenna may include the arrangements of various antennas on an access terminal **106**, the proximity of external objects to the antenna, or inherent antenna characteristics. For example, the hand of a user may be wrapped around a portion of an access terminal **106** including the first antenna, effectively blocking the antenna. As another example, the access terminal **106** may be positioned such that the first antenna operates with less than ideal receive and/or transmit conditions.

[0129] At block **906**, the method continues by comparing the performance characteristics of the first antenna to a threshold. For example, the threshold may include a performance characteristic level sufficient to support the particular type of communications being transmitted and/or received, such as voice communications or data only communications. Based on the comparison, the method determines whether to switch to a second antenna at block **908**. For example, the performance characteristics of the first antenna are worse than the threshold (e.g., the receive power level of the antenna is less than a sufficient receive power level to support the communications, the interference level is above an acceptable interference level, etc.), the processor/controller **320** may cause the switching circuitry **360** to switch the receiver and/or transmitter currently operating using the first antenna to operate using a second antenna.

[0130] FIG. **9**C shows a flowchart of an implementation of another exemplary method **902** detailing block **902** illustrated in FIG. **9**A in brackets. The method **902** may be implemented at a wireless communication apparatus implemented as an access terminal **106**, for example. Although the method **902** is described below with respect to elements of the access terminal **106**, those having ordinary skill in the art will appreciate that other components may be used to implement one or more of the blocks described herein.

[0131] At block **910**, the method **902** begins by determining the performance characteristics of a first antenna. For example, the receive power level of the first antenna may be obtained by measuring the receive automatic gain control (AGC) of the antenna using the receive circuit **340***a*, **340***b* that is currently switched to the first antenna. Other performance characteristic that may be measured may include automatic gain control (AGC) measurements, signal to interference plus noise ratio (SINR), signal to noise ratio (SNR), and the like. The measurement circuitry **342***b* and **342***d* may be used to detect the performance characteristic level of the signal received using the first antenna. A person of skill in the art will recognize that the transmit AGC of the first antenna may also be measured using the transmit circuit **330***a*, **330***b* that is currently switched to the first antenna in order to determine the performance characteristics of the first antenna. At block **912**, the method **902** continues by determining the performance characteristics of the second antenna. For example, the receive circuit **340***a*, **340***b* connected to the first antenna may be switched to the second antenna to measure AGC of the second antenna (e.g., using the measurement circuitry **342***b* or **32***d*). A person of skill in the art will recognize that the transmit circuit **330***a*, **330***b* connected to the first antenna may be switched to the second antenna to measure the AGC of the second antenna. As described above, factors affecting the performance characteristics of the first antenna may include the arrangements of various antennas on an access terminal **106**, the proximity of external objects to the antenna, or inherent antenna characteristics.

[0132] At block **914**, the method continues by comparing the performance characteristics of the first antenna to the performance characteristics of the second antenna. For example, the processor/controller **320** of an access terminal **106** including the first and second antennas (e.g., antennas **370***a* and **370***b*) may determine whether the difference between the performance characteristics of the first and second antennas is greater than a threshold difference that may be provided to ensure switching is not done unnecessarily. For example, it may only be necessary to switch the transmit circuit **330***a*, **330***b* and/or receive circuit **340***a*, **340***b* currently connected to the first antenna from the first antenna to the second antenna if the difference between two power levels or interference levels is large enough. A person of skill in the art will recognize that any other threshold difference may be used to determine whether to switch antennas.

[0133] Based on the comparison, the method continues at block **916** by determining whether to switch to the second antenna. For example, if the difference between the performance characteristics of the first antenna and the second antenna are above the threshold difference (e.g., indicating a large difference in performance characteristics between the two antennas), the processor/controller **320** may cause the switching circuitry **360** to switch the receiver and/or transmitter currently operating using the first antenna to operate using a second antenna.

[0134] FIG. **10** is a functional block diagram of an exemplary wireless communication apparatus **1000** that may be employed within the wireless communication system **100** in accordance with some embodiments. Those skilled in the art

will appreciate that a wireless communication device **1000** may have more components, such as any one or more of the components shown in FIGS. **3** and/or **4**. The wireless communication device **1000** shown includes only those components useful for describing some prominent features of certain embodiments. The device **1000** includes a receiving module **1002** and a transmitting module **1004**. In some cases, a means for receiving may include the receiving module **1002**. In some embodiments, the receiving module **1002** may include a plurality of receive circuits including a first receive circuit, at least two of the plurality of receive circuits each configured to simultaneously receive, with respect to the other, wireless communications from a different one of at least two networks relating to different radio access technologies. For example, the plurality of receive circuits may include transmit circuits **340***a*, **340***b*. In some cases, a means for transmitting may include a transmitting module **1004**. In some embodiments, the transmitting module **1004** may include a plurality of transmit circuits, such as transmit circuits **330***a*, **330***b*. The device **1000** further includes a first antenna **1006**, second antenna **1008**, and a third antenna **1012**. The device **1000** further includes a switching module **1010**. The switching module **1010** may be configured to perform one or more of the functions described above with respect to block **902** of FIG. **9**A. For example, the switching module **1010** may be configured to selectively switch the first receive circuit from receiving wireless communications via the first antenna to receive wireless communications via the second antenna based on one or more performance characteristics of at least one of the first antenna and the second antenna. In some cases, a means for switching and/or a means for selectively switching may include the switching module **1010**. The switching module **1010** and/or the means for switching may include the processor/controller **320** and/or the switching circuitry **360**.

[0135] Furthermore, the receiving module, the transmitting module, the means for receiving, and/or the means for transmitting may be configured to perform one or more of the functions described above with respect to blocks **904-908** of FIG. **9**B and/or blocks **910-916** of FIG. **9**C. In some embodiments, the switching module **1010** and/or the means for switching may be configured to perform one or more of the functions described above with respect to block **908** of FIG. **9**B and/or block **916** of FIG. **9**C.

[0136] If implemented in software, the functions, steps, and/or blocks described above may be stored on or transmitted over as one or more instructions or code on a computer-readable medium. The steps of a method or algorithm disclosed herein may be implemented in a processor-executable software module which may reside on a computer-readable medium. Computer-readable media includes both physical computer storage media and communication media, the communication media including any medium that can be enabled to transfer a computer program from one place to another. A storage media may be any available media that may be accessed by a computer. By way of example, and not limitation, such computer-readable media may include RAM, ROM, EEPROM, CD-ROM or other optical disk storage, magnetic disk storage or other magnetic storage devices, or any other medium that may be used to store desired program code in the form of instructions or data structures and that may be accessed by a computer. Also, any connection can be properly termed a computer-readable medium. Disk and disc, as used herein, includes compact disc (CD), laser disc, optical disc, digital versatile disc (DVD), floppy disk, and blu-ray disc where disks usually reproduce data magnetically, while discs reproduce data optically with lasers. Combinations of the above should also be included within the scope of computer-readable media. Additionally, the operations of a method or algorithm may reside as one or any combination or set of codes and instructions on a machine readable medium and computer-readable medium, which may be incorporated into a computer program product.

[0137] Furthermore, as indicated by the systems and methods described above, the teachings herein may be incorporated into a device employing various components for communicating with at least one other device. FIG. **12** depicts several sample components that may be employed to facilitate communication between devices in accordance with some embodiments. Specifically, FIG. **12** is a simplified block diagram of a first wireless device **1510** (e.g., an access point) and a second wireless device **1550** (e.g., an access terminal) of a multiple-in-multiple-out (MIMO) system **1500**. At the first device **1510**, traffic data for a number of data streams is provided from a data source **1512** to a transmit (TX) data processor **1514**.

[0138] In some aspects, each data stream is transmitted over a respective transmit antenna. The TX data processor **1514** formats, codes, and interleaves the traffic data for each data stream based on a particular coding scheme selected for that data stream to provide coded data.

[0139] The coded data for each data stream may be multiplexed with pilot data using OFDM techniques. The pilot data is typically a known data pattern that is processed in a known manner and may be used at the receiver system to estimate the channel response. The multiplexed pilot and coded data for each data stream is then modulated (i.e., symbol mapped) based on a particular modulation scheme (e.g., BPSK, QSPK, M-PSK, or M-QAM) selected for that data stream to provide modulation symbols. The data rate, coding, and modulation for each data stream may be determined by instructions performed by a processor **1530**. A data memory **1532** may store program code, data, and other information used by the processor **1530** or other components of the device **1510**.

[0140] The modulation symbols for all data streams are then provided to a TX MIMO processor **1520**, which may further process the modulation symbols (e.g., for OFDM). The TX MIMO processor **1520** then provides N_T modulation symbol streams to N_T transceivers (XCVR) **1522**A through **1522**T. In some aspects, the TX MIMO processor **1520** applies beam-forming weights to the symbols of the data streams and to the antenna from which the symbol is being transmitted.

[0141] Each transceiver **1522** receives and processes a respective symbol stream to provide one or more analog signals, and further conditions (e.g., amplifies, filters, and up converts) the analog signals to provide a modulated signal suitable for transmission over the MIMO channel. N_T modulated signals from transceivers **1522**A through **1522**T are then transmitted from N_T antennas **1524**A through **1524**T, respectively.

[0142] At the second device **1550**, the transmitted modulated signals are received by N_R antennas **1552**A through **1552**R and the received signal from each antenna **1552** is provided to a respective transceiver (XCVR) **1554**A through **1554**R. Each transceiver **1554** conditions (e.g., filters, amplifies, and down converts) a respective received signal, digitizes

the conditioned signal to provide samples, and further processes the samples to provide a corresponding "received" symbol stream.

[0143] A receive (RX) data processor **1560** then receives and processes the N_R received symbol streams from N_R transceivers **1554** based on a particular receiver processing technique to provide N_T "detected" symbol streams. The RX data processor **1560** then demodulates, deinterleaves, and decodes each detected symbol stream to recover the traffic data for the data stream. The processing by the RX data processor **1560** is complementary to that performed by the TX MIMO processor **1520** and the TX data processor **1514** at the device **1510**.

[0144] A processor **1570** periodically determines which pre-coding matrix to use (discussed below). The processor **1570** formulates a reverse link message comprising a matrix index portion and a rank value portion. A data memory **1572** may store program code, data, and other information used by the processor **1570** or other components of the second device **1550**.

[0145] The reverse link message may comprise various types of information regarding the communication link and/or the received data stream. The reverse link message is then processed by a TX data processor **1538**, which also receives traffic data for a number of data streams from a data source **1536**, modulated by a modulator **1580**, conditioned by the transceivers **1554**A through **1554**R, and transmitted back to the device **1510**.

[0146] At the device **1510**, the modulated signals from the second device **1550** are received by the antennas **1524**, conditioned by the transceivers **1522**, demodulated by a demodulator (DEMOD) **1540**, and processed by a RX data processor **1542** to extract the reverse link message transmitted by the second device **1550**. The processor **1530** then determines which pre-coding matrix to use for determining the beamforming weights then processes the extracted message.

[0147] FIG. **12** also illustrates that the communication components may include one or more components that perform access control operations as taught herein. For example, an access control component **1590** may cooperate with the processor **1530** and/or other components of the device **1510** to send/receive signals to/from another device (e.g., device **1550**) as taught herein. Similarly, an access control component **1592** may cooperate with the processor **1570** and/or other components of the device **1550** to send/receive signals to/from another device (e.g., device **1510**). It should be appreciated that for each device **1510** and **1550** the functionality of two or more of the described components may be provided by a single component. For example, a single processing component may provide the functionality of the access control component **1590** and the processor **1530** and a single processing component may provide the functionality of the access control component **1592** and the processor **1570**. Furthermore, the components of the apparatus **1500** described with reference to FIG. **3** may be incorporated with/into the components of FIG. **12**.

[0148] It should be understood that any reference to an element herein using a designation such as "first," "second," and so forth does not generally limit the quantity or order of those elements. Rather, these designations may be used herein as a convenient method of distinguishing between two or more elements or instances of an element. Thus, a reference to first and second elements does not mean that only two elements may be employed there or that the first element must precede the second element in some manner. Also, unless stated otherwise a set of elements may include one or more elements.

[0149] A person/one having ordinary skill in the art would understand that information and signals may be represented using any of a variety of different technologies and techniques. For example, data, instructions, commands, information, signals, bits, symbols, and chips that may be referenced throughout the above description may be represented by voltages, currents, electromagnetic waves, magnetic fields or particles, optical fields or particles, or any combination thereof.

[0150] A person/one having ordinary skill in the art would further appreciate that any of the various illustrative logical blocks, modules, processors, means, circuits, and algorithm steps described in connection with the aspects disclosed herein may be implemented as electronic hardware (e.g., a digital implementation, an analog implementation, or a combination of the two, which may be designed using source coding or some other technique), various forms of program or design code incorporating instructions (which may be referred to herein, for convenience, as "software" or a "software module), or combinations of both. To clearly illustrate this interchangeability of hardware and software, various illustrative components, blocks, modules, circuits, and steps have been described above generally in terms of their functionality. Whether such functionality is implemented as hardware or software depends upon the particular application and design constraints imposed on the overall system. Skilled artisans may implement the described functionality in varying ways for each particular application, but such implementation decisions should not be interpreted as causing a departure from the scope of the present disclosure.

[0151] The various illustrative logical blocks, modules, and circuits described in connection with the aspects disclosed herein and in connection with FIGS. **1-15** may be implemented within or performed by an integrated circuit (IC), an access terminal, or an access point. The IC may include a general purpose processor, a digital signal processor (DSP), an application specific integrated circuit (ASIC), a field programmable gate array (FPGA) or other programmable logic device, discrete gate or transistor logic, discrete hardware components, electrical components, optical components, mechanical components, or any combination thereof designed to perform the functions described herein, and may execute codes or instructions that reside within the IC, outside of the IC, or both. The logical blocks, modules, and circuits may include antennas and/or transceivers to communicate with various components within the network or within the device. A general purpose processor may be a microprocessor, but in the alternative, the processor may be any conventional processor, controller, microcontroller, or state machine. A processor may also be implemented as a combination of computing devices, e.g., a combination of a DSP and a microprocessor, a plurality of microprocessors, one or more microprocessors in conjunction with a DSP core, or any other such configuration. The functionality of the modules may be implemented in some other manner as taught herein. The functionality described herein (e.g., with regard to one or more of the accompanying figures) may correspond in some aspects to similarly designated "means for" functionality in the appended claims.

[0152] It is understood that any specific order or hierarchy of steps in any disclosed process is an example of a sample approach. Based upon design preferences, it is understood

that the specific order or hierarchy of steps in the processes may be rearranged while remaining within the scope of the present disclosure. The accompanying method claims present elements of the various steps in a sample order, and are not meant to be limited to the specific order or hierarchy presented.

[0153] Various modifications to the embodiments described in this disclosure may be readily apparent to those skilled in the art, and the generic principles defined herein may be applied to other embodiments without departing from the spirit or scope of this disclosure. Thus, the disclosure is not intended to be limited to the embodiments shown herein, but is to be accorded the widest scope consistent with the claims, the principles and the novel features disclosed herein. The word "exemplary" is used exclusively herein to mean "serving as an example, instance, or illustration." Any embodiment described herein as "exemplary" is not necessarily to be construed as preferred or advantageous over other embodiments.

[0154] Certain features that are described in this specification in the context of separate embodiments also can be implemented in combination in a single embodiment. Conversely, various features that are described in the context of a single embodiment also can be implemented in multiple embodiments separately or in any suitable sub-combination. Moreover, although features may be described above as acting in certain combinations and even initially claimed as such, one or more features from a claimed combination can in some cases be excised from the combination, and the claimed combination may be directed to a sub-combination or variation of a sub-combination.

[0155] Similarly, while operations are depicted in the drawings in a particular order, this should not be understood as requiring that such operations be performed in the particular order shown or in sequential order, or that all illustrated operations be performed, to achieve desirable results. In certain circumstances, multitasking and parallel processing may be advantageous. Moreover, the separation of various system components in the embodiments described above should not be understood as requiring such separation in all embodiments, and it should be understood that the described program components and systems can generally be integrated together in a single software product or packaged into multiple software products. Additionally, other embodiments are within the scope of the following claims. In some cases, the actions recited in the claims can be performed in a different order and still achieve desirable results.

What is claimed is:

1. A wireless communication apparatus, comprising:

a plurality of antennas including at least a first antenna, a second antenna, and a third antenna;

a plurality of receive circuits including a first receive circuit, at least two of the plurality of receive circuits each configured to simultaneously receive, with respect to the other, wireless communications from a different one of at least two networks relating to different radio access technologies; and

a controller configured to selectively switch the first receive circuit from receiving wireless communications via the first antenna to receive wireless communications via the second antenna based on one or more performance characteristics of at least one of the first antenna and the second antenna.

2. The wireless communication apparatus of claim **1**, wherein:

the first receive circuit is configured to receive wireless communications according to a first radio access technology and a second receive circuit is configured to receive wireless communications according to a second radio access technology;

the first antenna and the second antenna are configured to be used by both the first receive circuit and the second receive circuit; and

the third antenna is configured to be used by a third receive circuit.

3. The wireless communication apparatus of claim **2**, wherein the first receive circuit and the second receive circuit share with each other information relating to the one or more performance characteristic of the first antenna and the second antenna.

4. The wireless communication apparatus of claim **2**, wherein the first radio access technology includes data only communications and the second radio access technology includes voice only communications.

5. The wireless communication apparatus of claim **1**, further comprising a plurality of proximity sensors configured to sense proximity of an object relative to each of the plurality of antennas, and wherein the one or more performance characteristics of the first antenna and the second antenna is determined based at least in part on state information of the plurality of proximity sensors.

6. The wireless communication apparatus of claim **5**, wherein the controller is configured to selectively switch based on a proximity of the first antenna to the object as indicated by the state information of the plurality of proximity sensors.

7. The wireless communication apparatus of claim **1**, wherein the controller is configured to selectively switch based on an orientation of the wireless communication device.

8. The wireless communication apparatus of claim **2**, wherein the controller is configured to selectively switch based on preferences for each of the plurality of receive circuits, the preferences based on priority levels assigned to different radio access technologies associated with each of the plurality of receive circuits.

9. The wireless communication apparatus of claim **8**, wherein the different radio access technologies associated with each of the plurality of receive circuits include voice only communications and data only communications, and wherein voice only communications have a higher priority than data communications.

10. The wireless communication apparatus of claim **8**, wherein the controller is configured to assign the preferences to each of the plurality of receive circuits based on a state of each of the plurality of receive circuits.

11. The wireless communication apparatus of claim **8**, wherein the first receive circuit has a higher preference level than the second receive circuit, and wherein the controller is configured to switch the first receive circuit to receive wireless communications via the second antenna based on the higher preference level.

12. The wireless communication apparatus of claim **8**, wherein the second receive circuit has a lower preference level than the first receive circuit, and the second receive circuit is denied a request to switch to the second antenna based on the lower preference level.

13. The wireless communication apparatus of claim **8**, wherein the receive circuit according to the highest preference level has control of switching circuitry.

14. The wireless communication apparatus of claim **1**, further comprising:

wherein the one or more performance characteristics of the first antenna and the second antenna is determined based at least in part on a receive power level of each of the first antenna and second antenna; and

wherein the controller is configured to switch the first receive circuit from receiving wireless communications via the first antenna to receive wireless communications via the second antenna in response to detecting a first receive power level of the first antenna is less than a first threshold power level.

15. The wireless communication apparatus of claim **1**, further comprising:

wherein the one or more performance characteristics of the first antenna and the second antenna is determined based at least in part on a receive power level of each of the first antenna and second antenna; and

wherein the controller is configured to switch the first receive circuit from receiving wireless communications via the first antenna to receive wireless communications via the second antenna in response to detecting:

a first receive power level of the first antenna is less than a threshold power level; and

a difference between the second receive power level and the first receive power level is greater than a threshold difference.

16. The wireless communication apparatus of claim **1**, wherein the controller is configured to selectively switch during an idle state of the first receive circuit.

17. The wireless communication apparatus of claim **1**, further comprising:

a second receive circuit configured to receive wireless communications via the first antenna and the second antenna; and

wherein the controller is configured to:

detect performance characteristics of the first antenna and the second antenna based on the wireless communications received using the second receive circuit; and

selectively switch the first receive circuit from receiving wireless communications via the first antenna to receive wireless communications via the second antenna based on the detected performance characteristics.

18. The wireless communication apparatus of claim **17**, wherein the performance characteristics include a power differential between the first antenna and the second antenna.

19. The wireless communication apparatus of claim **17**, further comprising:

wherein the first receive circuit is configured to receive wireless communications according to a first radio access technology and the second receive circuit is configured to receive wireless communications according to a second radio access technology; and

wherein the first receive circuit is in an idle state and the second receive circuit is in an active state.

20. The wireless communication apparatus of claim **17**, further comprising:

wherein the first receive circuit is configured to receive wireless communications according to a first radio access technology and the second receive circuit is configured to receive wireless communications according to a second radio access technology; and

wherein the first receive circuit is in an active state and the second receive circuit is in an active state.

21. The wireless communication apparatus of claim **1**, further comprising:

a second receive circuit configured to receive wireless communications via the second antenna; and

wherein the controller is configured to:

detect performance characteristics of the second antenna based on the wireless communications transmitted and received using the second receive circuit;

compare the detected performance characteristics of the second antenna with performance characteristics of the first antenna; and

selectively switch the first receive circuit from receiving wireless communications via the first antenna to receive wireless communications via the second antenna based on the comparison.

22. The wireless communication apparatus of claim **1**, wherein the one or more performance characteristics of the first antenna and the second antenna include one or more downlink performance metrics.

23. The wireless communication apparatus of claim **22**, wherein the one or more downlink performance metrics of the first antenna include at least one of a setpoint and frame erasures.

24. The wireless communication apparatus of claim **1**, further comprising a common manager configured to coordinate the selective switching by the controller.

25. The wireless communication apparatus of claim **2**, wherein the controller is configured to switch the first receive circuit back to receiving wireless communications via the first antenna if a performance of the first receive circuit is lower after the switch.

26. The wireless communication apparatus of claim **2**, wherein the controller is configured to schedule the switch of the first receive circuit to receive wireless communications via the second antenna.

27. The wireless communication apparatus of claim **2**, wherein the first antenna is a default antenna for the first receive circuit, and wherein the controller is configured to switch the first receive circuit to receive wireless communications via the first antenna if the second receive circuit is in an active state and is receiving wireless communications via the second antenna.

28. A method implemented in a wireless communication apparatus, the method comprising:

selectively switching a first receive circuit from receiving wireless communications via a first antenna to receive wireless communications via a second antenna based on one or more performance characteristics of at least one of the first antenna and the second antenna, wherein at least the first receive circuit and a second receive circuit of the wireless communication apparatus are each configured to simultaneously receive, with respect to the other, wireless communications from a different one of at least two networks relating to different radio access technologies.

29. The method of claim **28**, further comprising:

receiving wireless communications using the first receive circuit according to a first radio access technology;

receiving wireless communications using the second receive circuit according to a second radio access technology; and

wherein first antenna and the second antenna are configured to be used by both the first receive circuit and the second receive circuit and wherein a third antenna is configured to be used by a third receive circuit.

30. The method of claim **29**, further comprising sharing information relating to the one or more performance characteristic of the first antenna and the second antenna between the first receive circuit and the second receive circuit.

31. The method of claim **29**, wherein the first radio access technology includes data only communications and the second radio access technology includes voice only communications.

32. The method of claim **28**, further comprising sensing proximity of an object relative to each of the first antenna and the second antenna, wherein the one or more performance characteristics of the first antenna and the second antenna is determined based at least in part on the sensed proximity of the object.

33. The method of claim **28**, further comprising selectively switching based on a proximity of the first antenna to the object as indicated by the sensed proximity.

34. The method of claim **28**, further comprising selectively switching based on an orientation of the wireless communication device.

35. The method of claim **28**, further comprising selectively switching based on preferences for each of the plurality of receive circuits, the preferences based on priority levels assigned to different radio access technologies associated with each of the first receive circuit and the second receive circuit.

36. The method of claim **35**, wherein the different radio access technologies associated with each of the first receive circuit and the second receive circuit include voice only communications and data only communications, and wherein voice only communications have a higher priority than data communications.

37. The method of claim **35**, further comprising assigning the preferences to each of the plurality of receive circuits based on a state of each of the plurality of receive circuits.

38. The method of claim **35**, wherein the first receive circuit has a higher preference level than the second receive circuit, and further comprising switching the first receive circuit to receive wireless communications via the second antenna based on the higher preference level.

39. The method of claim **35**, wherein the second receive circuit has a lower preference level than the first receive circuit, and further comprising denying the second receive circuit a request to switch to the second antenna based on the lower preference level.

40. The method of claim **35**, providing the receive circuit according to the highest preference level with control of switching circuitry.

41. The method of claim **28**, further comprising:

wherein the one or more performance characteristics of the first antenna and the second antenna is determined based at least in part on a receive power level of each of the first antenna and second antenna; and

switching the first receive circuit from receiving wireless communications via the first antenna to receive wireless communications via the second antenna in response to detecting a first receive power level of the first antenna is less than a first threshold power level.

42. The method of claim **28**, further comprising:

wherein the one or more performance characteristics of the first antenna and the second antenna is determined based at least in part on a receive power level of each of the first antenna and second antenna; and

switching the first receive circuit from receiving wireless communications via the first antenna to receive wireless communications via the second antenna in response to detecting:

a first receive power level of the first antenna is less than a threshold power level; and

a difference between the second receive power level and the first receive power level is greater than a threshold difference.

43. The method of claim **28**, further comprising selectively switching during an idle state of the first receive circuit.

44. The method of claim **28**, further comprising:

wherein the second receive circuit is configured to receive wireless communications via the first antenna and the second antenna;

detecting performance characteristics of the first antenna and the second antenna based on the wireless communications received using the second receive circuit; and

selectively switching the first receive circuit from receiving wireless communications via the first antenna to receive wireless communications via the second antenna based on the detected performance characteristics.

45. The method of claim **44**, wherein the performance characteristics include a power differential between the first antenna and the second antenna.

46. The method of claim **44**, further comprising:

receiving wireless communications using the first receive circuit according to a first radio access technology;

receiving wireless communications using the second receive circuit according to a second radio access technology; and

wherein the first receive circuit is in an idle state and the second receive circuit is in an active state.

47. The method of claim **44**, further comprising:

receiving wireless communications using the first receive circuit according to a first radio access technology;

receiving wireless communications using the second receive circuit according to a second radio access technology; and

wherein the first receive circuit is in an active state and the second receive circuit is in an active state.

48. The method of claim **28**, further comprising:

wherein the second receive circuit is configured to receive wireless communications via the second antenna;

detecting performance characteristics of the second antenna based on the wireless communications transmitted and received using the second receive circuit;

comparing the detected performance characteristics of the second antenna with performance characteristics of the first antenna; and

selectively switching the first receive circuit from receiving wireless communications via the first antenna to receive wireless communications via the second antenna based on the comparison.

49. The method of claim **28**, wherein the one or more performance characteristics of the first antenna and the second antenna include one or more downlink performance metrics.

50. The method of claim **49**, wherein the one or more downlink performance metrics of the first antenna include at least one of a setpoint and frame erasures.

51. The method of claim **28**, further comprising coordinating the selective switching by the controller using a common manager.

52. The method of claim **28**, further comprising switching the first receive circuit back to receiving wireless communications via the first antenna if a performance of the first receive circuit is lower after the switch.

53. The method of claim **28**, further comprising scheduling the switch of the first receive circuit to receive wireless communications via the second antenna.

54. The method of claim **28**, wherein the first antenna is a default antenna for the first receive circuit, and further comprising switching the first receive circuit to receive wireless communications via the first antenna if the second receive circuit is in an active state and is receiving wireless communications via the second antenna.

55. A wireless communication apparatus, comprising:

a plurality of antennas including a first antenna, a second antenna, and a third antenna;

a plurality of receive circuits including a first receive circuit, at least two of the plurality of receive circuits each configured to simultaneously receive, with respect to the other, wireless communications from a different one of at least two networks relating to different radio access technologies; and

means for selectively switching the first receive circuit from receiving wireless communications via the first antenna to receive wireless communications via the second antenna based on one or more performance characteristics of at least one of the first antenna and the second antenna.

56. The wireless communication apparatus of claim **55**, wherein:

the first receive circuit is configured to receive wireless communications according to a first radio access technology and a second receive circuit is configured to receive wireless communications according to a second radio access technology;

the first antenna and the second antenna are configured to be used by both the first receive circuit and the second receive circuit; and

the third antenna is configured to be used by a third receive circuit.

57. The wireless communication apparatus of claim **56**, wherein the first receive circuit and the second receive circuit share with each other information relating to the one or more performance characteristic of the first antenna and the second antenna.

58. The wireless communication apparatus of claim **56**, wherein the first radio access technology includes data only communications and the second radio access technology includes voice only communications.

59. The wireless communication apparatus of claim **55**, further comprising a plurality of proximity sensors configured to sense proximity of an object relative to each of the plurality of antennas, and wherein the one or more performance characteristics of the first antenna and the second antenna is determined based at least in part on state information of the plurality of proximity sensors.

60. The wireless communication apparatus of claim **59**, further comprising means for selectively switching based on a proximity of the first antenna to the object as indicated by the state information of the plurality of proximity sensors.

61. The wireless communication apparatus of claim **55**, further comprising means for selectively switching based on an orientation of the wireless communication device.

62. The wireless communication apparatus of claim **55**, further comprising means for selectively switching based on preferences for each of the plurality of receive circuits, the preferences based on priority levels assigned to different radio access technologies associated with each of the plurality of receive circuits.

63. The wireless communication apparatus of claim **62**, wherein the different radio access technologies associated with each of the plurality of receive circuits include voice only communications and data only communications, and wherein voice only communications have a higher priority than data communications.

64. The wireless communication apparatus of claim **62**, means for assigning the preferences to each of the plurality of receive circuits based on a state of each of the plurality of receive circuits.

65. The wireless communication apparatus of claim **62**, wherein the first receive circuit has a higher preference level than the second receive circuit, and further comprising means for switching the first receive circuit to receive wireless communications via the second antenna based on the higher preference level.

66. The wireless communication apparatus of claim **62**, wherein the second receive circuit has a lower preference level than the first receive circuit, and the second receive circuit is denied a request to switch to the second antenna based on the lower preference level.

67. The wireless communication apparatus of claim **62**, wherein the receive circuit according to the highest preference level has control of switching circuitry.

68. The wireless communication apparatus of claim **55**, further comprising:

wherein the one or more performance characteristics of the first antenna and the second antenna is determined based at least in part on a receive power level of each of the first antenna and second antenna; and

means for switching the first receive circuit from receiving wireless communications via the first antenna to receive wireless communications via the second antenna in response to detecting a first receive power level of the first antenna is less than a first threshold power level.

69. The wireless communication apparatus of claim **55**, further comprising:

wherein the one or more performance characteristics of the first antenna and the second antenna is determined based at least in part on a receive power level of each of the first antenna and second antenna; and

means for switching the first receive circuit from receiving wireless communications via the first antenna to receive wireless communications via the second antenna in response to detecting:

a first receive power level of the first antenna is less than a threshold power level; and

a difference between the second receive power level and the first receive power level is greater than a threshold difference.

70. The wireless communication apparatus of claim **55**, further comprising means for selectively switching during an idle state of the first receive circuit.

71. The wireless communication apparatus of claim **55**, further comprising:

a second receive circuit configured to receive wireless communications via the first antenna and the second antenna;

means for detecting performance characteristics of the first antenna and the second antenna based on the wireless communications received using the second receive circuit; and

means for selectively switching the first receive circuit from receiving wireless communications via the first antenna to receive wireless communications via the second antenna based on the detected performance characteristics.

72. The wireless communication apparatus of claim **71**, wherein the performance characteristics include a power differential between the first antenna and the second antenna.

73. The wireless communication apparatus of claim **71**, further comprising:

wherein the first receive circuit is configured to receive wireless communications according to a first radio access technology and the second receive circuit is configured to receive wireless communications according to a second radio access technology; and

wherein the first receive circuit is in an idle state and the second receive circuit is in an active state.

74. The wireless communication apparatus of claim **71**, further comprising:

wherein the first receive circuit is configured to receive wireless communications according to a first radio access technology and the second receive circuit is configured to receive wireless communications according to a second radio access technology; and

wherein the first receive circuit is in an active state and the second receive circuit is in an active state.

75. The wireless communication apparatus of claim **55**, further comprising:

a second receive circuit configured to receive wireless communications via the second antenna;

means for detecting performance characteristics of the second antenna based on the wireless communications transmitted and received using the second receive circuit;

means for comparing the detected performance characteristics of the second antenna with performance characteristics of the first antenna; and

means for selectively switching the first receive circuit from receiving wireless communications via the first antenna to receive wireless communications via the second antenna based on the comparison.

76. The wireless communication apparatus of claim **55**, wherein the one or more performance characteristics of the first antenna and the second antenna include one or more downlink performance metrics.

77. The wireless communication apparatus of claim **76**, wherein the one or more downlink performance metrics of the first antenna include at least one of a setpoint and frame erasures.

78. The wireless communication apparatus of claim **55**, further comprising a common manager configured to coordinate the selective switching by the controller.

79. The wireless communication apparatus of claim **55**, further comprising means for switching the first receive circuit back to receiving wireless communications via the first antenna if a performance of the first receive circuit is lower after the switch.

80. The wireless communication apparatus of claim **55**, further comprising means for scheduling the switch of the first receive circuit to receive wireless communications via the second antenna.

81. The wireless communication apparatus of claim **55**, wherein the first antenna is a default antenna for the first receive circuit, and further comprising means for switching the first receive circuit to receive wireless communications via the first antenna if the second receive circuit is in an active state and is receiving wireless communications via the second antenna.

82. A computer program product, comprising:

a computer-readable medium comprising:

code, when executed by a computer, causes the computer to selectively switch a first receive circuit from receiving wireless communications via a first antenna to receive wireless communications via a second antenna based on one or more performance characteristics of at least one of the first antenna and the second antenna, wherein at least the first receive circuit and a second receive circuit of the wireless communication apparatus are each configured to simultaneously receive, with respect to the other, wireless communications from a different one of at least two networks relating to different radio access technologies.

83. The computer program product of claim **82**, wherein the computer-readable medium further comprises:

code, when executed by the computer, causes the computer to receive wireless communications using the first receive circuit according to a first radio access technology;

code, when executed by the computer, causes the computer to receive wireless communications using the second receive circuit according to a second radio access technology;

wherein first antenna and the second antenna are configured to be used by both the first receive circuit and the second receive circuit and wherein a third antenna is configured to be used only by a first receive circuit.

84. The computer program product of claim **83**, wherein the computer-readable medium further comprises code, when executed by the computer, causes the computer to share information relating to the one or more performance characteristic of the first antenna and the second antenna between the first receive circuit and the second receive circuit.

85. The computer program product of claim **83**, wherein the first radio access technology includes data only communications and the second radio access technology includes voice only communications.

86. The computer program product of claim **82**, wherein the computer-readable medium further comprises code, when executed by the computer, causes the computer to sense proximity of an object relative to each of the first antenna and the second antenna, wherein the one or more performance char-

acteristics of the first antenna and the second antenna is determined based at least in part on the sensed proximity of the object.

87. The computer program product of claim **86**, wherein the computer-readable medium further comprises code, when executed by the computer, causes the computer to selectively switch based on a proximity of the first antenna to the object as indicated by the sensed proximity.

88. The computer program product of claim **82**, wherein the computer-readable medium further comprises code, when executed by the computer, causes the computer to selectively switch based on an orientation of the wireless communication device.

89. The computer program product of claim **82**, wherein the computer-readable medium further comprises code, when executed by the computer, causes the computer to selectively switch based on preferences for each of the plurality of receive circuits, the preferences based on priority levels assigned to different radio access technologies associated with each of the first receive circuit and the second receive circuit.

90. The computer program product of claim **89**, wherein the different radio access technologies associated with each of the first receive circuit and the second receive circuit include voice only communications and data only communications, and wherein voice only communications have a higher priority than data communications.

91. The computer program product of claim **89**, wherein the computer-readable medium further comprises code, when executed by the computer, causes the computer to assign the preferences to each of the plurality of receive circuits based on a state of each of the plurality of receive circuits.

92. The computer program product of claim **89**, wherein the first receive circuit has a higher preference level than the second receive circuit, and wherein the computer-readable medium further comprises code, when executed by the computer, causes the computer to switch the first receive circuit to receive wireless communications via the second antenna based on the higher preference level.

93. The computer program product of claim **89**, wherein the second receive circuit has a lower preference level than the first receive circuit, and wherein the computer-readable medium further comprises code, when executed by the computer, causes the computer to deny the second receive circuit a request to switch to the second antenna based on the lower preference level.

94. The computer program product of claim **89**, wherein the computer-readable medium further comprises code, when executed by the computer, causes the computer to provide the receive circuit according to the highest preference level with control of switching circuitry.

95. The computer program product of claim **82**, further comprising:

wherein the one or more performance characteristics of the first antenna and the second antenna is determined based at least in part on a receive power level of each of the first antenna and second antenna; and

wherein the computer-readable medium further comprises code, when executed by the computer, causes the computer to switch the first receive circuit from receiving wireless communications via the first antenna to receive wireless communications via the second antenna in response to detecting a first receive power level of the first antenna is less than a first threshold power level.

96. The computer program product of claim **82**, further comprising:

wherein the one or more performance characteristics of the first antenna and the second antenna is determined based at least in part on a receive power level of each of the first antenna and second antenna; and

wherein the computer-readable medium further comprises code, when executed by the computer, causes the computer to switch the first receive circuit from receiving wireless communications via the first antenna to receive wireless communications via the second antenna in response to detecting:

a first receive power level of the first antenna is less than a threshold power level; and

a difference between the second receive power level and the first receive power level is greater than a threshold difference.

97. The computer program product of claim **82**, wherein the computer-readable medium further comprises code, when executed by the computer, causes the computer to selectively switch during an idle state of the first receive circuit.

98. The computer program product of claim **82**, further comprising:

wherein the second receive circuit is configured to receive wireless communications via the first antenna and the second antenna; and

wherein the computer-readable medium further comprises:

code, when executed by the computer, causes the computer to detect performance characteristics of the first antenna and the second antenna based on the wireless communications received using the second receive circuit; and

code, when executed by the computer, causes the computer to switch the first receive circuit from receiving wireless communications via the first antenna to receive wireless communications via the second antenna based on the detected performance characteristics.

99. The computer program product of claim **98**, wherein the performance characteristics include a power differential between the first antenna and the second antenna.

100. The computer program product of claim **98**, further comprising:

wherein the computer-readable medium further comprises:

code, when executed by the computer, causes the computer to receive wireless communications using the first receive circuit according to a first radio access technology;

code, when executed by the computer, causes the computer to receive wireless communications using the second receive circuit according to a second radio access technology; and

wherein the first receive circuit is in an idle state and the second receive circuit is in an active state.

101. The computer program product of claim **98**, further comprising:

wherein the computer-readable medium further comprises:

code, when executed by the computer, causes the computer to receive wireless communications using the first receive circuit according to a first radio access technology;

code, when executed by the computer, causes the computer to receive wireless communications using the second receive circuit according to a second radio access technology; and

wherein the first receive circuit is in an active state and the second receive circuit is in an active state.

102. The computer program product of claim **82**, further comprising:

wherein the second receive circuit is configured to receive wireless communications via the second antenna; and

wherein the computer-readable medium further comprises:

code, when executed by the computer, causes the computer to detect performance characteristics of the second antenna based on the wireless communications transmitted and received using the second receive circuit;

code, when executed by the computer, causes the computer to compare the detected performance characteristics of the second antenna with performance characteristics of the first antenna; and

code, when executed by the computer, causes the computer to selectively switch the first receive circuit from receiving wireless communications via the first antenna to receive wireless communications via the second antenna based on the comparison.

103. The computer program product of claim **82**, wherein the one or more performance characteristics of the first antenna and the second antenna include one or more downlink performance metrics.

104. The computer program product of claim **103**, wherein the one or more downlink performance metrics of the first antenna include at least one of a setpoint and frame erasures.

105. The computer program product of claim **82**, wherein the computer-readable medium further comprises code, when executed by the computer, causes the computer to coordinate the selective switching by the controller using a common manager.

106. The computer program product of claim **82**, wherein the computer-readable medium further comprises code, when executed by the computer, causes the computer to switch the first receive circuit back to receiving wireless communications via the first antenna if a performance of the first receive circuit is lower after the switch.

107. The computer program product of claim **82**, wherein the computer-readable medium further comprises code, when executed by the computer, causes the computer to schedule the switch of the first receive circuit to receive wireless communications via the second antenna.

108. The computer program product of claim **82**, wherein the first antenna is a default antenna for the first receive circuit, and wherein the computer-readable medium further comprises code, when executed by the computer, causes the computer to switch the first receive circuit to receive wireless communications via the first antenna if the second receive circuit is in an active state and is receiving wireless communications via the second antenna.

* * * * *