UNITED STATES PATENT AND TRADEMARK OFFICE

BEFORE THE PATENT TRIAL AND APPEAL BOARD

SAMSUNG ELECTRONICS CO., LTD., AND SAMSUNG ELECTRONICS AMERICA, INC.,
Petitioner

v.

APEX BEAM TECHNOLOGIES LLC,
Patent Owner

Case IPR2023-00602

Patent No. 10,568,113

"LIU" DECLARATION OF DR. HARRY V. BIMS IN SUPPORT OF PETITION FOR *INTER PARTES* REVIEW

Table of Contents

I. INTRODUCTION 1

II. SUMMARY OF OPINIONS 1

III. QUALIFICATIONS AND BACKGROUND 2

IV. MATERIALS CONSIDERED 5

V. LEGAL STANDARDS 7

- A. Level of Ordinary Skill 8
- B. Prior Art 9
- C. Anticipation 9
- D. Obviousness 10

VI. TECHNOLOGY OVERVIEW 15

- A. General Overview of Multiple-Input and Multiple-Output (MIMO) and Antenna Beam Failure Recovery 15
- B. 3GPP Proposed Standard 16

VII. SUMMARY OF THE PRIOR ART 18

- A. *Xia* 18
- B. *Liu* 21
- C. *Jover* 24

VIII. THE ’113 PATENT 25

- A. Alleged Invention of the ’113 Patent 25
- B. The Prosecution History 28
- C. Claim Construction 28

IX. LEVEL OF ORDINARY SKILL IN THE ART 30

X. ANALYSIS OF GROUNDS OF UNPATENTABILITY 31

A. Claims 1-20 Are Obvious over *Liu* in View of *Jover* 31

1. Independent Claim 1 31

a. [1pre]: "A method in a User Equipment (UE) for wireless communication, comprising:" 31

b. [1a]: "receiving a target radio signal;" 33

c. [1b]: "transmitting a first radio signal on a first channel;" 35

d. [1c]: "transmitting a second radio signal on a second channel; and" 37

e. [1d]: "monitoring a third radio signal in a first time window;" 38

f. [1e]: "wherein a measurement for the target radio signal obtains a target measurement value, the target measurement value, when higher than a target threshold is used for triggering the transmission of the first radio signal and the second radio signal;" 42

g. [1f]: "a time resource occupied by the first radio signal is used for determining the start time of the first time window;" 46

h. [1g]: "a time domain resource occupied by the first radio signal is used for determining a second time window," 48

i. [1h]: "a time domain resource occupied by the second radio signal is within the second time window, and the second time window is within the first time window;" 49

j. [1i]: "a time domain resource occupied by the second radio signal is used for determining a third time window, and the end time of the third time

window is the end time of the first time window; and" 50

k. [1j]: "the second time window and the third time window have overlapped time domain resource(s)." 52

2. Claim 2 53

a. [2a]: "The method according to claim 1, wherein at least one signal of the following set of signals: {the first radio signal, the second radio signal} is used for determining a multi-antenna related transmitting of the third radio signal; or," 53

b. [2b]: "the first radio signal and the second radio signal together are used for determining the multi-antenna related transmitting of the third radio signal." 57

3. Claim 3 57

a. "The method according to claim 1, wherein the first channel is a first type of physical layer channel, the second channel is a second type of physical layer channel, and the first type of physical layer channel and the second type of physical layer channel are two different types of physical layer channels." 57

4. Claim 4 60

a. "The method according to claim 1, wherein the first channel is a physical layer control channel." 60

5. Claim 5 60

a. [5a]: "The method according to claim 1, wherein the first radio signal is used for determining a first antenna port group, and the first antenna port group is spatially related to an antenna port group used for transmitting the third radio signal, the

being spatially related refers to being Quasi Co-Located ('QCL'); or," 60

b. [5b]: "the first time window is divided into a second time interval and a third time interval, the second time interval is before the third time interval, the third time interval is behind a time domain resource occupied by the second radio signal, the first radio signal is used for determining a second antenna port group, in the second time interval, the second antenna port group is spatially QCL with an antenna port group used for transmitting the third radio signal in the second time interval, the second radio signal is used for determining a third antenna port group; in the third time interval, the third antenna port group is spatially QCL with an antenna port group used for transmitting the third radio signal in the third time interval." 62

6. Independent Claim 6 62

a. [6pre]: "A method in a base station device for wireless communication, comprising:" 62

b. [6a]: "transmitting a target radio signal;" 63

c. [6b]: "receiving a first radio signal on a first channel;" 63

d. [6c]: "receiving a second radio signal on a second channel; and" 64

e. [6d]: "transmitting a third radio signal in a first time window;" 65

f. [6e]: "wherein a measurement for the target radio signal obtains a target measurement value, the target measurement value, when higher than a target threshold, is used for triggering the transmission of the first radio signal and the second radio signal;" 65

g. [6f]: "a time resource occupied by the first radio signal is used for determining the start time of the first time window;" 66

h. [6g]: "a time domain resource occupied by the first radio signal is used for determining a second time window," 66

i. [6h]: "a time domain resource occupied by the second radio signal is within the second time window, and the second time window is within the first time window;" 66

j. [6i]: "a time domain resource occupied by the second radio signal is used for determining a third time window, and the end time of the third time window is the end time of the first time window; and" 66

k. [6j]: "the second time window and the third time window have overlapped time domain resource(s)." 66

7. Claim 7 67

a. [7a]: "The method according to claim 6, wherein at least one signal of the following set of signals: {the first radio signal, the second radio signal} is used for determining a multi-antenna related transmitting of the third radio signal; or," 67

b. [7b]: "the first radio signal and the second radio signal together are used for determining the multi-antenna related transmitting of the third radio signal." 67

8. Claim 8 67

a. "The method according to claim 6, wherein the first channel is a first type of physical layer channel, the second channel is a second type of physical layer channel, and the first type of

physical layer channel and the second type of physical layer channel are two different types of physical layer channels." 67

9. Claim 9 68

a. "The method according to claim 6, wherein the first channel is a physical layer control channel." 68

10. Claim 10 68

a. [10a]: "The method according to claim 6, wherein the first radio signal is used for determining a first antenna port group, and the first antenna port group is spatially related to an antenna port group used for transmitting the third radio signal, the being spatially related refers to being Quasi Co-Located ('QCL'); or," 68

b. [10b]: "the first time window is divided into a second time interval and a third time interval, the second time interval is before the third time interval, the third time interval is behind a time domain resource occupied by the second radio signal, the first radio signal is used for determining a second antenna port group, in the second time interval, the second antenna port group is spatially QCL with an antenna port group used for transmitting the third radio signal in the second time interval, the second radio signal is used for determining a third antenna port group; in the third time interval, the third antenna port group is spatially QCL with an antenna port group used for transmitting the third radio signal in the third time interval." 68

11. Independent Claim 11 69

a. [11pre]: "A UE for wireless communication, comprising:" 69

b. [11a]: "a first receiver module, to receive a target radio signal;" 73

c. [11b]: "a second transmitter module, to transmit a first radio signal on a first channel;" 74

d. [11c]: "a third transmitter module, to transmit a second radio signal on a second channel; and" 75

e. [11d]: "a fourth receiver module, to monitor a third radio signal in a first time window;" 76

f. [11e]: "wherein a measurement for the target radio signal obtains a target measurement value, the target measurement value, when higher than a target threshold, is used for triggering the transmission of the first radio signal and the second radio signal;" 76

g. [11f]: "a time resource occupied by the first radio signal is used for determining the start time of the first time window;" 77

h. [11g]: "a time domain resource occupied by the first radio signal is used for determining a second time window," 77

i. [11h]: "a time domain resource occupied by the second radio signal is within the second time window, and the second time window is within the first time window;" 77

j. [11i]: "a time domain resource occupied by the second radio signal is used for determining a third time window, and the end time of the third time window is the end time of the first time window; and" 77

k. [11j]: "the second time window and the third time window have overlapped time domain resource(s)." 77

12. Claim 12 78

a. [12a]: "The UE according to claim 11, wherein at least one signal of the following set of signals: {the first radio signal, the second radio signal} is used for determining a multi-antenna related transmitting of the third radio signal; or," 78

b. [12b]: "the first radio signal and the second radio signal together are used for determining the multi-antenna related transmitting of the third radio signal." 78

13. Claim 13 78

a. "The UE according to claim 11, wherein the first channel is a first type of physical layer channel, the second channel is a second type of physical layer channel, and the first type of physical layer channel and the second type of physical layer channel are two different types of physical layer channels." 78

14. Claim 14 79

a. "The UE according to claim 11, wherein the first channel is a physical layer control channel." 79

15. Claim 15 79

a. [15a]: "The UE according to claim 11, wherein the first radio signal is used for determining a first antenna port group, and the first antenna port group is spatially related to an antenna port group used for transmitting the third radio signal, the being spatially related refers to being Quasi Co-Located ('QCL'); or," 79

b. [15b]: "the first time window is divided into a second time interval and a third time interval, the second time interval is before the third time interval, the third time interval is behind a time

domain resource occupied by the second radio signal, the first radio signal is used for determining a second antenna port group, in the second time interval, the second antenna port group is spatially QCL with an antenna port group used for transmitting the third radio signal in the second time interval, the second radio signal is used for determining a third antenna port group; in the third time interval, the third antenna port group is spatially QCL with an antenna port group used for transmitting the third radio signal in the third time interval." 79

16. Independent Claim 16 80

a. [16pre]: "A base station device for wireless communication, comprising:" 80

b. [16a]: "a first transmitter module, to transmit a target radio signal;" 82

c. [16b]: "a second receiver module, to receive a first radio signal on a first channel;" 82

d. [16c]: "a third receiver module, to receive a second radio signal on a second channel; and" 83

e. [16d]: "a fourth transmitter module, to transmit a third radio signal in a first time window;" 83

f. [16e]: "wherein a measurement for the target radio signal obtains a target measurement value, the target measurement value, when higher than a target threshold, is used for triggering the transmission of the first radio signal and the second radio signal;" 84

g. [16f]: "a time resource occupied by the first radio signal is used for determining the start time of the first time window;" 84

h. [16g]: "a time domain resource occupied by the first radio signal is used for determining a second time window," 84

i. [16h]: "a time domain resource occupied by the second radio signal is within the second time window, and the second time window is within the first time window;" 84

j. [16i]: "a time domain resource occupied by the second radio signal is used for determining a third time window, and the end time of the third time window is the end time of the first time window; and" 85

k. [16j]: "the second time window and the third time window have overlapped time domain resource(s)." 85

17. Claim 17 85

a. [17a]: "The base station device according to claim 16, wherein at least one signal of the following set of signals: {the first radio signal, the second radio signal} is used for determining a multi-antenna related transmitting of the third radio signal; or," 85

b. [17b]: "the first radio signal and the second radio signal together are used for determining the multi-antenna related transmitting of the third radio signal." 85

18. Claim 18 86

a. "The base station device according to claim 16, wherein the first channel is a first type of physical layer channel, the second channel is a second type of physical layer channel, and the first type of physical layer channel and the second type of physical layer channel are two different types of physical layer channels." 86

19. Claim 19 86

a. "The base station device according to claim 16, wherein the first channel is a physical layer control channel." 86

20. Claim 20 86

a. [20a]: "The base station device according to claim 16, wherein the first radio signal is used for determining a first antenna port group, and the first antenna port group is spatially related to an antenna port group used for transmitting the third radio signal, the being spatially related refers to being QCL; or," 86

b. [20b]: "the first time window is divided into a second time interval and a third time interval, the second time interval is before the third time interval, the third time interval is behind a time domain resource occupied by the second radio signal, the first radio signal is used for determining a second antenna port group, in the second time interval, the second antenna port group is spatially QCL with an antenna port group used for transmitting the third radio signal in the second time interval, the second radio signal is used for determining a third antenna port group; in the third time interval, the third antenna port group is spatially QCL with an antenna port group used for transmitting the third radio signal in the third time interval." 87

XI. CONCLUSION 87

I. INTRODUCTION

1. I, Harry V. Bims, Ph.D., have been retained as an independent expert by Samsung Electronics Co., Ltd., and Samsung Electronics America, Inc. ("Petitioner" or "Samsung") in connection with an *inter partes* review (IPR) of U.S. Patent No. 10,568,113 ("the '113 patent") (Ex. 1001). I have prepared this declaration in connection with Samsung's Petition for *Inter Partes* Review.

2. Specifically, this document contains my opinions about the technology in claims 1-20 of the '113 patent and the grounds against these claims that have been asserted by Samsung. I was not asked to provide any opinions about the '113 patent that are not expressed herein.

II. SUMMARY OF OPINIONS

3. This declaration considered claims 1-20 of the '113 patent. Below, I set forth the opinions I have formed, the conclusions I have reached, and the bases for these opinions and conclusions. I believe the statements contained in this declaration to be true and correct to the best of my knowledge.

4. Based on my experience, knowledge of the art at the time of the applicable priority date (I was told to assume a priority date of August 11, 2017), it is my opinion that claims 1-20 of the '113 patent would have been obvious based on the asserted grounds.

5. I am being compensated for my time at the rate of $700 per hour. This compensation is in no way contingent upon the nature of my findings, the presentation of my findings in testimony, or the outcome of this proceeding.

III. QUALIFICATIONS AND BACKGROUND

6. I believe that I am well qualified to serve as a technical expert in this matter based upon my qualifications, discussed in detail below. A copy of my curriculum vitae is attached as Appendix A to this declaration.

7. Based on my education, research, and work experience, I am knowledgeable about the subject matter of the '113 patent and the related prior art.

8. For more than 30 years, since approximately 1981, I have studied, designed, and worked in the field of telecommunications, including wireless communications. During this period, I have designed and implemented various products involving cellular communication technology.

9. I received a B.S. in Computer and Systems Engineering from Rensselaer Polytechnic Institute in 1985. I received an M.S. in Electrical Engineering in 1988 and a Ph.D. in Electrical Engineering in 1993, both from Stanford University. As a graduate student, I studied the principle of Digital Communications theory, including data modulation and demodulation, signal constellations and lattices, channel estimation, equalization, filtering, precoding, synchronization, and trellis coding. My Ph.D. thesis addressed

the application of trellis coding and precoding to a digital modulation system, and was titled "Trellis Coding for Multi-Level, Partial Response Continuous Phase Modulation with Precoding."

10. After receiving my Ph.D. in 1993, I worked for Glenayre Technologies – Wireless Access Group, where I worked on applications for wireless communication, including inventing, designing, and building a patented two-way pager test system and co-developing a wireless application protocol.

11. In January of 1999, I launched a technology consulting company, Protocomm Systems Inc., which focuses on the development of advanced wireless communications protocols and related software implementations for wireless product companies.

12. From 1999 to 2001, I was also the Director of Software Architecture for Symmetry Communications System. I this position, I was responsible for the software architecture for core SGSN (Serving GPRS Support Node) and GGSN (Gateway GPRS Support Node) products for the GPRS (Generic Packet Radio Services) market. I also held management responsibility for the Firmware, Hardware, Performance, and Systems Engineering Groups.

13. In 2001, I developed a business plan for building network infrastructure for Institute of Electrical and Electronics Engineers ("IEEE") 802.11 standard ("Wi-Fi") enterprise networks, and then later that year founded AirFlow

Networks, Inc. where I invented and received eleven patents on a distributed antenna system design for wireless networks, based on the 802.11 wireless local area network specification.

14. I am currently the President of Protocomm Systems, LLC and Bims Laboratories, LLC, both of which I founded. As the President of Bims Laboratories, I perform technical research in wireless technology standards, such as UMTS, LTE/4G, 5G, Wi-Fi, Bluetooth, and other network communication protocols. I am named as an inventor of twenty-three telecommunications related patents.

15. In addition, I am a named Technical Expert and former Vice-Chair and Secretary of the IEEE 802.16 Working Group, which develops technical standards for the wireless protocol commonly known as WiMax. I am also a voting member of the IEEE 802.11 Working Group (which develops technical standards for WiFi), and the IEEE 802.15 Working Group (which develops standards for a variety of specialty wireless networks). Within the IEEE 802.15 Working Group, I am the technical editor for IEEE 802.16t, an amendment to the WiMAX standard that supports long-range wireless networks for the railroad industry. Within the IEEE 802.11 Working Group, I routinely participate and vote on discussions relating to the design of

wireless communications, including packet prioritization, transmission, acknowledgment, and retransmission.

IV. MATERIALS CONSIDERED

16. In forming my opinions, I have reviewed the following documents, and any other document cited in this declaration.

Exhibit	Description
Ex. 1001	U.S. Patent No. 10,568,113 to Zhang ("the '113 patent")
Ex. 1003	Prosecution History of the '113 patent (downloaded from the USPTO's Patent Center Website)
Ex. 1004	U.S. Patent Application Publication No. 2019/0053294 to Xia et al., published February 14, 2019 ("*Xia*")
Ex. 1005	U.S. Patent Application Publication No. 2015/0141026 to Jover, published May 21, 2015 ("*Jover*")
Ex. 1006	3GPP TSG RAN WG1 NR Ad-Hoc#2, Qingdao, P.R. China 27th – 30th June 2017, published in 3GPP website (https://www.3gpp.org/ftp/tsg_ran/WG1_RL1/TSGR1_AH/NR_AH_1706/Docs) on June 16, 2017 ("*R1-1710596*")
Ex. 1007	U.S. Patent Publication No. 2018/0367374 to Liu et al., published December 20, 2018 ("*Liu*")
Ex. 1009	Raghav Pandey, Ashwani Awasthi, and Vikas Srivastava, "Comparison between Bit Error Rate And Signal To Noise Ratio in OFDM Using LSE Algorithm," in Proceedings of the Conference on Advances in Communication and Control Systems (CAC2S 2013), pp. 463-466, Atlantis Press 2013.
Ex. 1011	International Patent Publication No. WO 2017/024516 A1 to Lu et al., published February 16, 2017 ("*Lu*")

Exhibit	Description
Ex. 1012	U.S. Provisional Application No. 62/543,765 to Xia et al. ("*Xia Provisional*")
Ex. 1013	U.S. Patent No. 6,185,432 to Vembu, published February 6, 2001 ("*Vembu*")
Ex. 1014	U.S. Provisional Application No. 62/521,170 to Liu et al. ("*Liu Provisional*")
Ex. 1021	3GPP TSG RAN WG1 NR Ad-Hoc#2, R1-1710078, Qingdao, P.R. China 27th – 30th June 2017, published in 3GPP website (https://www.3gpp.org/ftp/tsg_ran/WG1_RL1/TSGR1_AH/NR_AH_1706/Docs) on June 16, 2017 ("*R1-1710078*").
Ex. 1022	3GPP TSG RAN WG1 #87ah-NR, R1-1700771, Spokane, WA, USA, 16th – 20th January, 2017, published in 3GPP website (https://www.3gpp.org/ftp/tsg_ran/WG1_RL1/TSGR1_AH/NR_AH_1701/Docs/) on January 10, 2017 ("*R1-1700771*").

17. I have also relied on my education, experience, research, training, and knowledge in the relevant art, and my understanding of any applicable legal principles described in this declaration.

18. All of the opinions contained in this declaration are based on the documents I reviewed and my knowledge and professional judgment. My opinions have also been guided by my understanding of how a person of ordinary skill in the art would have understood the claims of the '113 patent at the time of the earliest claimed priority date.

19. I reserve the right to supplement and amend any of my opinions in this declaration based on documents, testimony, and other information that becomes available to me after the date of this declaration.

V. LEGAL STANDARDS

20. I am not a lawyer. My understanding of the legal standards to apply in reaching the conclusions in this declaration is based on discussions with counsel for Petitioner, my experience applying similar standards in other patent-related matters, and my reading of the documents submitted in this proceeding. In preparing this declaration, I have tried to faithfully apply these legal standards to the challenged claims.

21. I have been informed that there are two ways in which prior art may render a patent claim unpatentable. First, I have been informed that the prior art can "anticipate" a claim. Second, I have been informed that the prior art can render a claim "obvious" to a person of ordinary skill in the art. I understand that a claim is patentable if it was not anticipated and would not have been obvious by the prior art at the effective filing date of the patent.

22. I have been informed that a dependent claim is a patent claim that refers back to another patent claim. I have been informed that a dependent claim includes all of the limitations of the claim to which it refers.

23. I have been asked to provide my opinions as to whether the cited prior art teaches or renders obvious claims 1-20 of the '113 patent from the perspective of a person of ordinary skill in the art at the '113 patent's earliest claimed priority date in 2017, as described in more detail below.

24. I have been informed that in *inter partes* review proceedings, such as this one, the party challenging the patent bears the burden of proving unpatentability by a preponderance of the evidence. I understand that a preponderance of the evidence means "more likely than not."

25. For purposes of this declaration, I have been asked to provide my opinions on issues regarding unpatentability. I have been informed of the following legal standards, which I have applied in forming my opinions.

A. Level of Ordinary Skill

26. I have been informed a person of ordinary skill in the art is determined by considering several factors, including the (i) type of problems encountered in the art; (ii) prior art solutions to those problems; (iii) rapidity with which innovations are made; (iv) sophistication of the technology; and (v) educational level of active workers in the field.

27. I have been instructed to assume a person of ordinary skill in the art is not a specific real individual, but rather a hypothetical individual having the qualities reflected by the factors discussed above.

B. Prior Art

28. I have been advised and understand the information used to evaluate whether an invention was new and not obvious when made is generally referred to as "prior art." I understand that prior art includes patents and printed publications that existed before the earliest claimed priority date or the earliest filing date of the patent (which I have been informed is also called the "effective filing date"). I have been informed and understand that a patent or published patent application is prior art if it was filed before the earliest filing date of the claimed invention and that a printed publication is prior art if it was publicly available before the earliest filing date.

C. Anticipation

29. I have been informed that under 35 U.S.C. § 102, a patent claim is unpatentable for anticipation if the claimed subject matter was patented or described in a printed publication before the effective filing date of the claimed invention. I have been informed that this is referred to as unpatentability by anticipation. I have been informed that a patent claim is anticipated under § 102 if a single prior art reference discloses all limitations of the claimed invention.

D. Obviousness

30. I have been informed that obviousness under 35 U.S.C. § 103, a patent claim is unpatentable if the differences between the subject matter sought to be patented and the prior art are such that the subject matter as a whole would have been obvious to a person having ordinary skill in the art to which said subject matter pertains at the time the invention was made. I have been informed that this is referred to as unpatentability by obviousness.

31. I have been informed that a proper obviousness analysis includes the following:

    a. Determining the scope and content of the prior art;
    b. Ascertaining the differences between the prior art and the claims at issue;
    c. Resolving the level of ordinary skill in the pertinent art; and
    d. Considering evidence of secondary indicia of non-obviousness (if available).

32. I have been informed that the relevant time for considering whether a claim would have been obvious to a person of ordinary skill in the art is the time of invention. For my obviousness analysis, counsel for Petitioner instructed me to assume that the date of invention for the Challenged Claims is August 11, 2017. My opinions would not change if I assumed a later date of invention.

33. I have been informed that a reference may be modified or combined with other references or with a person of ordinary skill in the art's own knowledge if the person would have found the modification or combination obvious. I have also been informed that a person of ordinary skill in the art is presumed to know all the relevant prior art, and the obviousness analysis may take into account the inferences and creative steps that a person of ordinary skill in the art would employ.

34. I have been informed that whether a prior art reference renders a patent claim obvious is determined from the perspective of a person of ordinary skill in the art. I have also been informed that, while there is no requirement that the prior art contain an express suggestion to combine known elements to achieve the claimed invention, and while a suggestion to combine known elements to achieve the claimed invention may come from the prior art as a whole or individually and may consider the inferences and creative steps a person of ordinary skill in the art would employ, as filtered through the knowledge of one skilled in the art, obviousness grounds cannot be sustained by mere conclusory statements and must include some articulated reasoning with some rational underpinning to support the legal conclusion of obviousness.

35. In determining whether a prior art reference could have been combined with another prior art reference or other information known to a person having ordinary skill in the art, I have been informed that the following principles may be considered:

a. A combination of familiar elements according to known methods is likely to be obvious if it yields predictable results;

b. The substitution of one known element for another is likely to be obvious if it yields predictable results;

c. The use of a known technique to improve similar items or methods in the same way is likely to be obvious if it yields predictable results;

d. The application of a known technique to a prior art reference that is ready for improvement to yield predictable results;

e. Any need or problem known in the field and addressed by the reference can provide a reason for combining the elements in the manner claimed;

f. A person of ordinary skill often will be able to fit the teachings of multiple references together like a puzzle; and

g. The proper analysis of obviousness requires a determination of whether a person of ordinary skill in the art would have a "reasonable expectation of success"—but not "absolute predictability" of

success—in achieving the claimed invention by combining prior art references.

36. I have been informed that, when a work is available in one field, design alternatives and other market forces can prompt variations of it, either in the same field or in another. I have been informed that if a person of ordinary skill in the art could have implemented a predictable variation and would have seen the benefit of doing so, that variation is likely to have been obvious. I have been informed that, in many fields, there may be little discussion of obvious combinations, and in these fields market demand—not scientific literature—may drive design trends. I have been informed that, when there was a design need or market pressure and there are a finite number of predictable solutions, a person of ordinary skill in the art would have had a good reason to pursue those known options.

37. I have been informed that the law permits the application of "common sense" in examining whether a claimed invention would have been obvious to a person skilled in the art. For example, I have been informed that combining familiar elements according to known methods and in a predictable way may suggest obviousness when such a combination would yield nothing more than predictable results. I understand, however, that a claim is not obvious merely because every claim element is disclosed in the

prior art and that a party asserting obviousness must still provide a specific motivation to combine or modify the references as recited in the claims and explain why one skilled in the art would have reasonably expected to succeed in doing so.

38. I have been informed that there is no rigid rule that a reference or combination of references must contain a "teaching, suggestion, or motivation" to combine references. But I also understand that the "teaching, suggestion, or motivation" test can be a useful guide in establishing a rationale for combining elements of the prior art. I have been informed that this test poses the question as to whether there is an express or implied teaching, suggestion, or motivation to combine prior art elements in a way that realizes the claimed invention, and that it seeks to counter impermissible hindsight analysis.

39. I am not aware of any evidence of secondary considerations that would support a determination of non-obviousness of the claimed subject matter in the '113 patent.

40. I have been informed that, in an obviousness analysis, prior art must be analogous prior art to the patent being considered. I have been informed that a prior art reference is considered to be analogous, or in the same field of art, if the reference is either (1) in the same field of endeavor as the challenged

patent, regardless of the problems the challenged patent and the prior art address, or (2) reasonably pertinent to the particular problem being solved by the challenged patent.

VI. TECHNOLOGY OVERVIEW

A. General Overview of Multiple-Input and Multiple-Output (MIMO) and Antenna Beam Failure Recovery

41. One of the aims of wireless communications research is to improve the speed, reliability, and coverage area of wireless signals transmitted over the air. One technique that is being used to achieve these objectives is multiple-input and multiple-output (MIMO) radio communications. MIMO is a physical layer technique that has been well known for many years, where user equipment (UE) and a base station each transmit and receive wireless signals using multiple antennas.

42. The multiple antennas are controlled in such a way that they collectively generate one or more antenna patterns created by the multiple antennas, called beams. These beams direct the energy of wireless radio signals in particular directions and even allow for multiple radio signals to be transmitted and received simultaneously. Due to time-varying fluctuations in the radio frequency channel conditions, the quality of each beam (and thus, the quality of communication between the UE and the base station) may vary over time based on a number of factors.

43. When the quality of the beam is insufficient, a beam failure may be detected. To resolve the beam failure, the UE and the base station may communicate to change or adjust their beam patterns and thereby improve the quality of communication between the UE and the base station. This process is known as beam failure recovery.

44. Beam failure recovery was well known in the art before the earliest claimed priority date of the '113 patent, August 11, 2017. For example, International Patent Publication No. WO 2017/024516, filed on August 11, 2015 ("*Lu*"), discloses the recovery from beam failure in a wireless access network, where a beamforming technique is used in communication between network elements. *Lu*, Abstract. Specifically, *Lu* discloses sending a notification of a beam failure from the UE to an access node (i.e., base station), and in response, sending information about a new serving beam from the access node to the UE. *Lu*, [058]-[067], FIG. 3.

B. 3GPP Proposed Standard

45. The 3rd Generation Partnership Project (3GPP) is a well-known standards development organization that develops wireless telecommunications standards. Generally, the 3GPP holds technical standards group meetings several times a year to propose and discuss new

standards and/or changes to exisiting standards. The 3GPP materials are generally made available to the public on the 3GPP website.

46. 3GPP is organized into several Technical Specification Groups (TSGs) which "prepare, approve and maintain the 3GPP Technical Specifications and Technical Reports, under the chair-ship of an elected leadership." *See* 3GPP website at https://www.3gpp.org/3gpp-groups. Each TSG consists of several "Working Groups" (WG). For example, the Radio Access Network TSG includes the RAN WG1, "Radio Layer 1" working group, referred to as either TSG RAN WG1 or sometimes simply as RAN1.

47. During one particular 3GPP TSG RAN WG1 NR meeting held in Qingdao, China between June 27-30, 2017, the working group discussed the following proposal:

> Proposal 7: A UE can transmit additional beam failure recovery request through PUCCH after it first transmits using PRACH and before it receives the corresponding Message 2.

Ex. 1006, page 4.

48. In other words, "Proposal 7" describes a technique where a UE can send a second beam failure recovery request through a second channel, the Physical Uplink Control Channel (PUCCH), before receiving a response (the corresponding Message 2) to a first beam failure recovery request through a

first channel, the Physical Random Access Channel (PRACH). Shortly after this meeting was held, the alleged priority application of the '113 patent was filed on August 11, 2017, describing "Proposal 7" from the *R1-1710596* document and some other well-known details.

VII. SUMMARY OF THE PRIOR ART

A. *Xia*

49. The disclosure in *Xia* (Ex. 1004) "generally relates to wireless communication networks, and in particular, to recovering from a beam failure between user equipment and a base station." *Xia*, [0002]; *Xia Provisional*, [0001]. As background for its invention, *Xia* describes a problem where demand for higher capacity broadband communications causes wireless communication systems to increase their capability, in particular, by requiring beamforming antennas at the base station and user equipment. *Xia*, [0003]; *Xia Provisional*, [0002]. However, if a misalignment between the base station and user equipment beams occurs, a beam failure may result. *Xia*, [0004]; *Xia Provisional*, [0003].

50. *Xia* discloses a proposed solution to this problem is a method in a UE where multiple beam failure recovery requests are transmitted to a base station. *Xia*, [0091]; *Xia Provisional*, [0084]. In particular, the UE first monitors a reference signal (beam failure detection RS) to assess whether a beam failure

trigger condition has been met. *Xia*, [0076]; *Xia Provisional*, [0062]. If the condition is met, the UE transmits a **first beam failure recovery request** to the base station using a **first channel** (e.g., **PUCCH**), and subsequently, transmits a **second beam failure recovery request** to the base station using a **second channel** (e.g., **PRACH**). *Xia*, [0091]-[0093], [0097]-[0103], [0105]-[0106], FIG. 6B, FIG. 7A-7B; *Xia Provisional*, [0084]-[0085], FIG. 6.

51. *Xia* also discloses that the UE waits for a **beam failure recovery response** to the two beam failure recovery requests, at t3 or t4. *Xia*, [0102]; *Xia Provisional*, [0084]-[0085], FIG. 6.

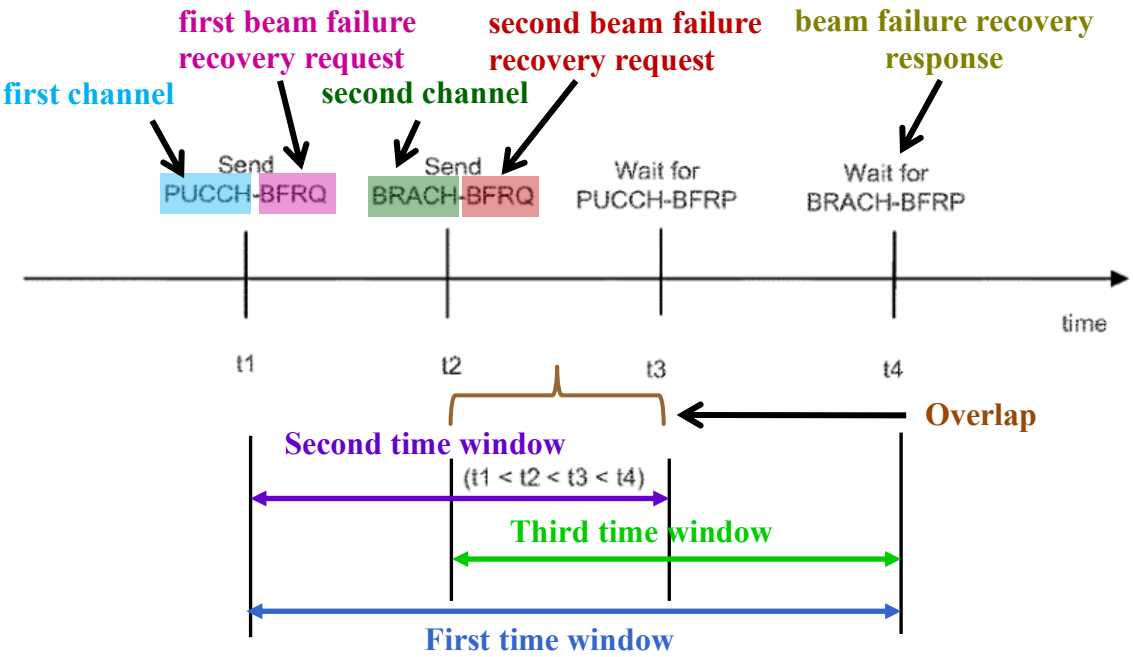

Xia, FIG. 6B (annotated); *Xia Provisional*, FIG. 6.

52. As a result, as shown in annotated FIG. 6B above, the UE waits for the response to the beam failure recovery requests within a time window starting from t1 and ending at t4, i.e., a **first time window**. *Xia*, [0102], [0084]; *Xia Provisional*, [0084]-[0085], FIG. 6. As shown, a response time window associated with the first beam failure recovery request (i.e., a **second time window**) and a response time window associated with the second beam failure recovery request (i.e., a **third time window**) have overlapped time domain resource(s).

53. *Xia* is analogous art to the '113 patent because *Xia*, like the '113 patent, is directed to "wireless communication networks" that include methods for "recovering from a beam failure between user equipment and a base station." *Xia*, [0002]; *Xia Provisional*, [0001]; '113 patent, 1:16-59.

54. I understand that *Xia* is prior art based on its provisional filing date of August 10, 2017. I understand that a prior art reference may be entitled to its provisional filing date if (1) the provisional application contains support for at least one claim of the prior art reference, and (2) each part of the prior art reference being relied upon as prior art has support in the provisional application.

55. In my opinion, at least claim 1 of *Xia* is supported by its provisional application, as shown in the chart below. In addition, I believe each citation

that I rely on from *Xia* is supported by its provisional application, as shown in the sections below.

Claim 1 of *Xia*	Support in *Xia* *Provisional* (Ex. 1012)
1. A method for beam failure recovery in user equipment, comprising:	"A method for beam failure recovery in user equipment, comprising:" *Xia Provisional*, Claim 1; *see also* [0004]-[0009].
detecting a beam failure event between the user equipment and a base station;	"detecting a beam failure event between the user equipment and a base station;" *Xia Provisional*, Claim 1; *see also* [0062].
sending a first beam failure recovery request (BFRQ) to the base station upon detection of the beam failure event; and	"sending a first beam failure recovery request (BFRQ) to the base station upon detection of the beam failure," *Xia Provisional*, Claim 1; *see also* [0062], [0065], [0073]-[0077], [0084], FIG. 5B, FIG. 6.
searching for a beam failure recovery response (BFRP) within a first response time window.	"The method of claim 1, further comprising searching for a PUCCH-beam failure recovery response (BFRP) within a response time." *Xia Provisional*, Claim 2; *see also* [0062], [0065], [0067], [0078], [0083], [0084], [0085], FIG. 5B, FIG. 6.

B. *Liu*

56. The disclosure in *Liu* (Ex. 1007), similar to *Xia*, also relates generally to recovering from a beam failure between user equipment and a base station, in response to demand for higher capacity broadband communications and problems with beam failure communications. *Liu*, [0002], [0003]; *Liu Provisional*, [0001], [0002].

57. *Liu* discloses a method for beam failure recovery in user equipment. *Liu*, [0005]; *Liu Provisional*, [0004]. In particular, the UE first monitors a

reference signal and determines whether a beam failure has occurred. If a beam failure has occurred, the UE transmits a **first beam failure recovery request (BFRR)** to the base station using a first channel (e.g., PUCCH), and subsequently, transmits a **second BFRR** to the base station using a second channel (e.g., PRACH). *Liu*, [0084], [0098]-[0101], FIG. 5B; *Liu Provisional*, [0062], [0073]-[0076], FIG. 5B. *Liu* also discloses that, the UE monitors for a **BFRR response** to the two beam failure recovery requests. *Liu*, [0096], [0099]; *Liu Provisional*, [0071], [0074].

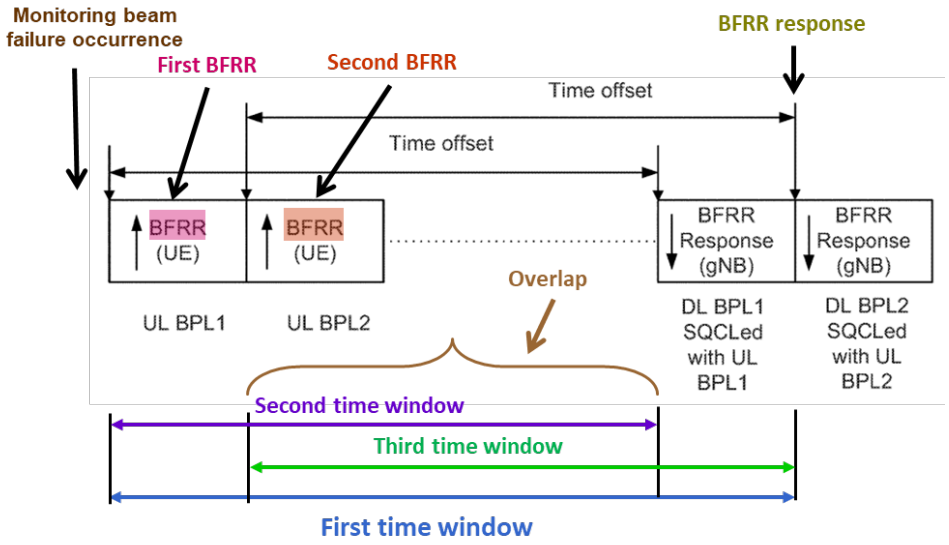

Liu, FIG. 5B (annotated).

58. As a result, as shown in annotated FIG. 5B above, the UE monitors the response to the BFRRs within a time window from the starting of the time offset for the first BFRR (a monitoring window for the first BFRR) until the end point of the time offset for the second BFRR (a monitoring window for the second BFRR), i.e., a **first time window**. *Liu*, [0084], [0096]-[0099],

FIG. 5B; *Liu Provisional*, [0062], [0071]-[0074]. In addition, a time window associated with the response time to the first BFRR (i.e., a **second time window**) and a time window associated with the response time to the second BFRR (i.e., a **third time window**) have overlapped time domain resource(s). *Liu*, [0084], [0096]-[0099], FIG. 5B; *Liu Provisional*, [0062], [0071]-[0074].

59. *Liu* is analogous art to the '113 patent because *Liu*, like the '113 patent, is directed to "wireless communication networks" that include methods for "recovering from a beam failure between user equipment and a base station." *Liu*, [0002]; *Liu Provisional*, [0001]; '113 patent, 1:16-59.

60. I understand that *Liu* is prior art based on its provisional filing date of June 16, 2017. I understand that a prior art reference may be entitled to its provisional filing date if (1) the provisional application contains support for at least one claim of the prior art reference, and (2) each part of the prior art reference being relied upon as prior art has support in the provisional application.

61. In my opinion, at least claim 1 of *Liu* is supported by its provisional application, as shown in the chart below. In addition, I believe each citation that I rely on from *Xia* is supported by its provisional application, as shown in the sections below.

Claim 1 of *Liu*	Support in *Liu* *Provisional* (Ex. 1014)
1. A method for beam failure recovery in user equipment, comprising:	"A method for beam failure recovery in user equipment, comprising:" *Liu Provisional*, claim 1; *see also* [0001], [0004].
sending a beam failure recovery request (BFRR) to a base station upon detection of a beam failure between the base station and the user equipment; and	"sending a beam failure recovery request (BFRR) to the base station upon detection of a beam failure between the base station and the user equipment;" *Liu Provisional*, claim 1; *see also* [0074], [0078]-[0079], FIGS. 5B, 6A.
monitoring one or more candidate beams in which to receive a BFRR response from the base station, based on an association between a beam failure recovery request (BFRR) response and the BFRR.	"monitoring one or more available candidate beams in which to receive the BFRR response from the base station, where the BFRR response is associated with the BFRR." *Liu Provisional*, claim 1; *see also* [0074], [0080], FIGS. 5B, 6A.

C. *Jover*

62. U.S. Patent Application Publication No. 2015/0141026 to Jover ("*Jover*") (Ex. 1005), published May 21, 2015. I understand that *Jover* is prior art to the '113 patent based on its publication date.

63. *Jover* discloses detecting a communication impairment (e.g., a connection failure) between an endpoint device (e.g., a UE) and a base station. *Jover*, [0040]. *Jover* explains that "a communication impairment may comprise a decreased signal-to-noise ratio (SNR), decreased signal-to-interference-and-noise (SINR) ratio, decreased received signal strength indication (RSSI) and/or an increased bit-error rate (BER) detected at the endpoint device

300." *Jover*, [0039]. In one example, *Jover* discloses that the communication impairment is detected by "a threshold drop in the SNR or SINR (e.g., a 20 percent drop as compared to a preceding time period)[,] an increase in the BER (e.g., when the BER increases beyond one percent), and so forth." *Jover*, [0040].

64. *Jover* is analogous art to the '113 patent because *Jover*, like the '113 patent, is directed to wireless communication networks that include methods for "detecting a communication impairment" between an endpoint device (UE) and a base station. *Jover*, [0001]-[0003], [0039]-[0040]; '113 patent, 1:16-59.

VIII. THE '113 PATENT

A. Alleged Invention of the '113 Patent

65. The Technical Field section of the '113 patent states that it "relates to transmission schemes of radio signals in wireless communication systems, and in particular, to a method and a device for a User Equipment (UE) to autonomously determine transmission of information." Ex. 1001, 1:17-21. Further, the '113 patent describes, as part of the related art, a proposal that was made in discussions at the 3GPP where a beam recovery request should be transmitted to a base station to change the service beam when the quality of the service beam is degraded. Ex. 1001, 1:31-39.

66. More specifically, the '113 patent relates to methods and devices for wireless communications between a UE and a base station that use known procedures, where beams are used to transmit and receive radio signals using antenna patterns that are formed by antenna port groups. The '113 patent contemplates a transmission scheme in a UE, in which the UE receives a target radio signal (e.g., a **reference signal**) from the base station and determines whether a triggering condition is met. Ex. 1001, 5:9-18; 23:48-54; 2:23-24.

67. Also, as disclosed in *Xia* and *Liu*, if the triggering condition is met, the UE transmits a first radio signal (**first beam recovery request**) to the base station using a first channel (e.g., PUCCH), and subsequently transmits a second radio signal (**second beam recovery request**) using a second channel (e.g., PRACH). Ex. 1001, 2:1-3; 8:57-65. The base station receives both requests and then sends a **beam recovery response**, as shown in annotated FIG. 6 below. Ex. 1001, 10:47-49, 63-64.

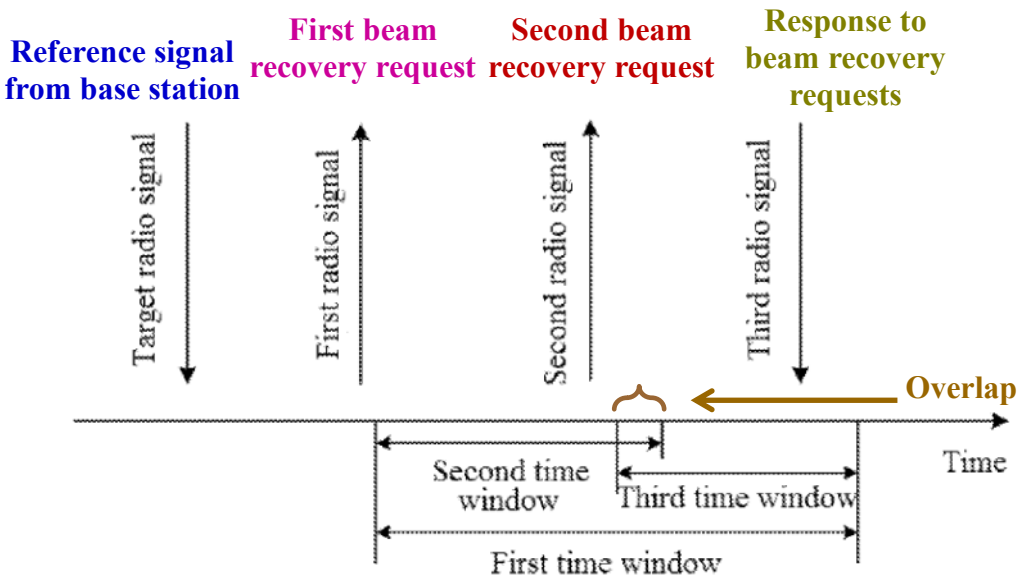

Ex. 1001, FIG. 6 (annotated).

68. And as disclosed in *Xia* and *Liu*, and shown in annotated FIG. 6 above, the UE waits for the response to the beam failure recovery requests within a time window from the sending of the first beam failure recovery request to the receipt of the response to the beam failure recovery requests (i.e., a first time window). '113 patent, 2:3-7. Further, as shown, a response time window associated with the first beam failure recovery request (i.e., a second time window) and a response time window associated with the second beam failure recovery request (i.e., a third time window) have overlapped time domain resource(s). '113 patent, 12:7-9, 22:51-56, 9;55-56.

B. The Prosecution History

69. The application that led to the '113 patent was filed on August 9, 2018, claiming priority to a foreign application CN 201710686330 filed on August 11, 2017. Ex. 1003, 3, 68.

70. During prosecution of the '113 patent, the examiner rejected the claims, finding that the prior art disclosed the methods and systems recited in original independent claims 1, 6, 11, and 16. Ex. 1003, 122-142. In response, the Applicant amended claims 1, 6, 11, and 16 by adding various time window limitations shown in FIG. 6 (discussed above) and argued that the prior art does not disclose that "the second time window and the third time window have overlapped time domain resource(s)." Ex. 1003, 153-161.

71. The examiner subsequently allowed the claims. Ex. 1003, 172-182. But *Xia* and *Liu* were not considered by the Examiner during prosecution. *See* Ex. 1001, 1-2.

C. Claim Construction

72. I have been instructed that the "intrinsic record" includes the patent itself, including the claims, description, and figures (Ex. 1001), and the patent's prosecution history—i.e., the record of proceedings at the U.S. Patent and Trademark Office ("Patent Office") concerning the patent (Ex. 1003). I understand that, like the claims and written description, the prosecution

history provides evidence to a person of ordinary skill in the art of how the inventor intended his patent to be understood, and how the Patent Office understood the patent. I understand that the inventor is permitted to apply a special definition to the terms or to limit the scope of claim terms in his patent claims, which may differ from the term's plain and ordinary meaning. That special definition or limitation on scope may be provided in the patent's written description, the patent's prosecution history, or both.

73. I understand that claim interpretation may also be informed by "extrinsic evidence" (that is, evidence outside of the patent record itself). I have been informed that extrinsic evidence may include dictionaries, technical treatises, and other materials evidencing the meaning of a claim term and the understanding held by a POSITA in the relevant time period.

74. I have been asked for purposes of this declaration to apply the plain and ordinary meaning of the claim terms as they would have been understood by a person of ordinary skill in the art at the earliest claimed priority date of the '113 patent.

75. I understand that no claim term's construction is in dispute at this time. Based on my review of these materials and my personal knowledge and experience, I have considered each term of the '113 patent as it would have

been understood by a person of ordinary skill in the art at the earliest claimed priority date of August 11, 2017.

IX. LEVEL OF ORDINARY SKILL IN THE ART

76. In rendering the opinions set forth in this declaration, I have been asked to consider the '113 patent's claims and the prior art through the eyes of a person of ordinary skill in the art (which I may also refer to as "one skilled in the art," "skilled artisan," "POSITA," or similar variation). I have considered factors such as the educational level and years of experience of those working in the pertinent art, the types of problems encountered in the art, the teachings of the prior art, patents and publications of other persons or companies, and the sophistication of the technology.

77. Taking the factors described in the Legal Standards – Level of Ordinary Skill section into consideration, it is my opinion that a person of ordinary skill in the art ("POSITA") would have had at least a Master's degree in electrical engineering or a similar field and at least two years of experience working with telecommunications systems, including multiple-input multiple-output (MIMO) technology. Additional relevant work experience can compensate for less education, and *vice versa*.

X. ANALYSIS OF GROUNDS OF UNPATENTABILITY

78. In my opinion, the challenged claims are unpatentable for the reasons explained below.

A. Claims 1-20 Are Obvious over *Liu* in View of *Jover*

1. Independent Claim 1

a. [1pre]: "A method in a User Equipment (UE) for wireless communication, comprising:"

79. *Liu* discloses a method in a user equipment (UE) for wireless communication. For example, *Liu* explains that the technical field of its disclosure "generally relates to wireless communication networks." *Liu* [0002]; *Liu Provisional*, [0001]. As shown in annotated FIG. 1 below, *Liu* discloses a wireless communication system 100 including "**user equipment 110A-110C**, radio access networks (RANs) 120A-120B, a core network 130, a public switched telephone network (PSTN) 140, the Internet 150, and other networks 160." *Liu*, [0056];[1] *Liu Provisional*, [0034]. *Liu* explains that the "user equipment (UE) 110A-110C are configured to operate and/or communicate in the system 100. For example, the user equipment 110A-

[1] All emphasis is added unless noted otherwise. Also, all figures in this petition containing color are annotated relative to the original figures in the patent or prior art and all text in color is added.

110C are configured to transmit and/or receive wireless signals or wired signals." *Liu*, [0059]; *Liu Provisional*, [0037]. *Liu* further explains that "the RANs 120A-120B include one or more base stations 170A, 170B (collectively, **base stations 170**), respectively. Each of the base stations 170 is configured to wirelessly interface with one or more of the **UEs 110A, 110B, 110C** to enable access to the core network 130, the PSTN 140, the Internet 150, and/or the other networks 160." *Liu*, [0060]; *Liu Provisional*, [0038].

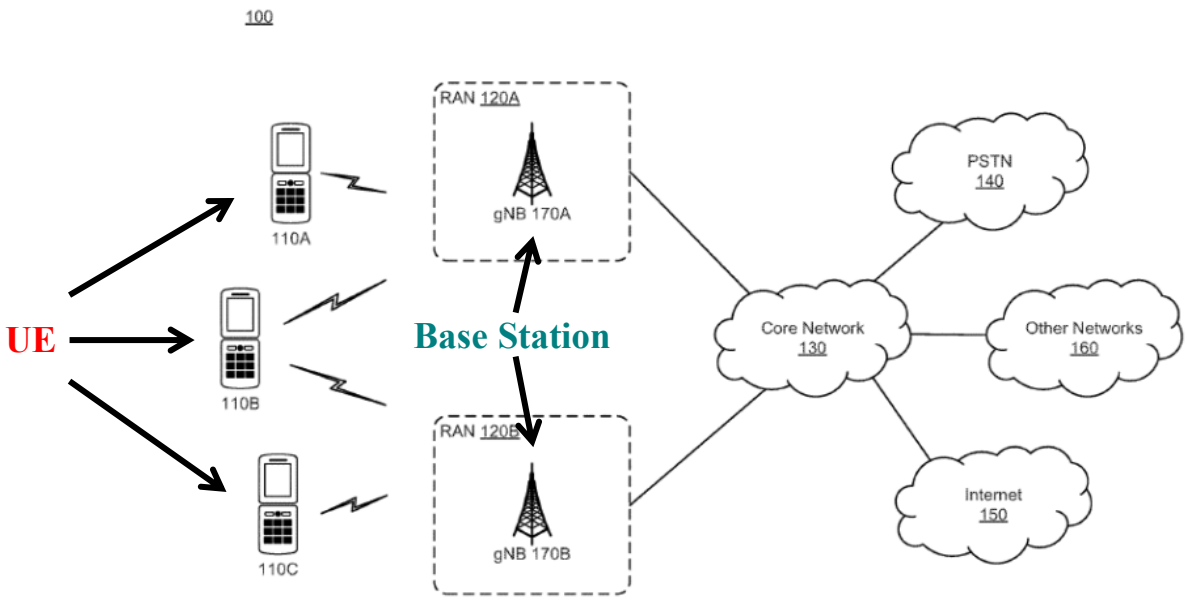

Liu, FIG. 1 (annotated); *Liu Provisional*, FIG. 1.

80. One wireless communication method described in *Liu* is "a method for beam failure recovery in user equipment." *Liu*, [0005], [0002] (describing the technical field as "generally relat[ing] to wireless communication networks, and in particular, to recovering from a beam failure between user equipment

and a base station"); *Liu Provisional*, [0004], [0001]. *Liu*'s method includes, among other things, "sending a beam failure recovery request (BFRR) to the base station upon detection of a beam failure between the base station and the user equipment; and monitoring one or more candidate beams in which to receive a BFRR response from the base station, based on an association between a beam failure recovery request (BFRR) response and the BFRR." *Liu*, [0005]; *see also Liu*, [0032], [0033], [0103]; *Liu Provisional*, [0004], [0032]; *see also*, [0017], [0077]. This method in a UE for wireless communication is described in more detail below.

b. [1a]: "receiving a target radio signal;"

81. *Liu* discloses that the UE receives a target radio signal, which it calls a "reference signal" from the base station. *Liu*, [0069]-[0070]; *Liu Provisional*, [0047]-[0048]. As shown in FIGS. 4A and 4B below, *Liu* discloses that "the base station 402 and user equipment 404 communicate via DL [downlink] beam pairs and UL [uplink] beam pairs." *Liu*, [0075]; *Liu Provisional*, [0053]. FIG. 4A illustrates a case in which "the DL beam pair fails," and FIG. 4B illustrates a case in which "the DL/UL beam pair fails." *Liu*, [0075]; *see also Liu*, [0067], [0068], FIG. 2; *Liu Provisional*, [0053]; *see also Liu Provisional*, [0045], [0046], FIG. 2.

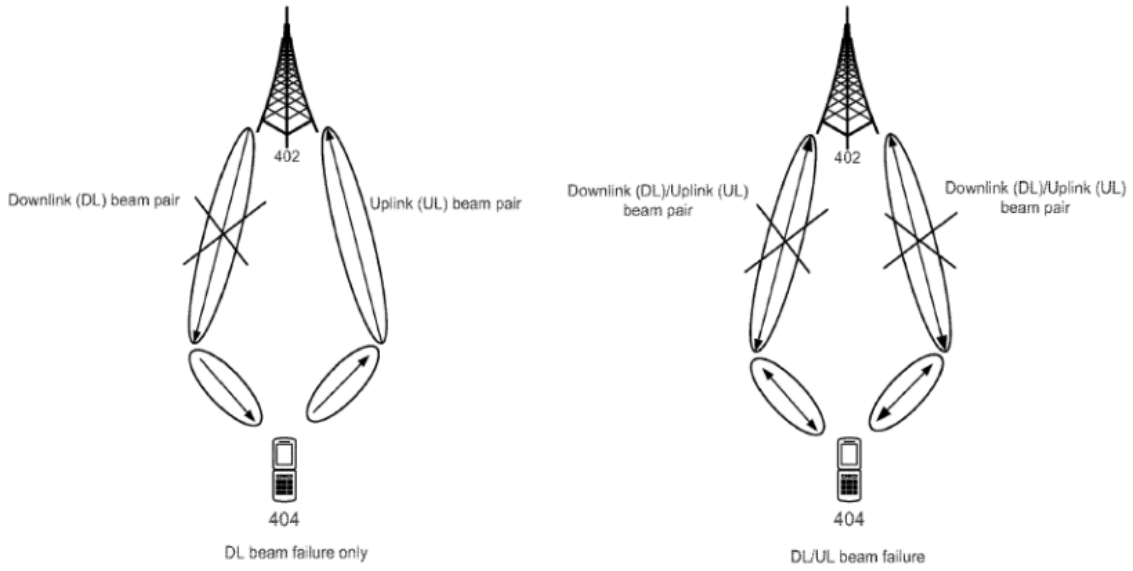

Liu, FIGS. 4A (left) and 4B (right); *Liu Provisional*, FIGS. 4A, 4B.

82. According to *Liu*, "a beam failure is detected by the user equipment 110A-110C." *Liu*, [0103]; *Liu Provisional*, [0078]. *Liu* discloses that "[i]f the user equipment 110A-110C does not support Rx beamforming, the user equipment 110A-110C measures the channel quality of a **reference signal (RS)** in each transmission beam and reports the measurements to the base station 202." *Liu*, [0069]; *Liu Provisional*, [0047]. *Liu* further discloses "[i]f the user equipment 110A-110C is configured to support Rx beamforming, the user equipment 110A-110C measures the channel qualities of multiple Tx beams received from the base station 202 for each reception beam pattern and reports a total or some high-ranked measurements of all Tx-Rx beam pairs to the base station 202." *Liu*, [0069]; *Liu Provisional*, [0047]. *Liu*'s reference signal can be a "channel state information-reference signal (**CSI-**

RS)." *Liu*, [0087], [0091]; *Liu Provisional*, [0068]. *Liu* also discloses that the UE receives a "**synchronization signal** from base station 402." *Liu*, [0076]-[0077]; *Liu Provisional*, [0054]-[0055]. A POSITA would understand that *Xia* receives the beam failure detection RS because the UE detects the beam failure and reports detection of the beam failure. *Liu*, [0103], [0069]; *Liu Provisional*, [0078], [0047].

83. The '113 patent's specification states that the claimed "target radio signal" can be "a **reference signal**" such as "a **Channel State Information Reference Signal (CSI-RS)** used for conducting a channel quality measurement of a physical layer control channel," or "a **Synchronization Signal (SS)** used for conducting a channel quality measurement of a physical layer control channel." '113 patent, 2:23-36. Thus, *Liu*'s reference signal, such as the CSI-RS or the synchronization signal, constitutes the claimed "target reference signal."

c. [1b]: "transmitting a first radio signal on a first channel;"

84. *Liu* discloses that "[i]n order for the system to recover from such a beam failure, the user equipment 404 sends a beam failure recovery request (BFRR) to the base station 402." *Liu*, [0084]; *Liu Provisional*, [0062]. According to *Liu*, in some cases, "the user equipment 404 may transmit multiple BFRRs in UL beam pairs (e.g., [UL BPL1, UL BPL2])." *Liu*,

[0099]; *see also Liu*, [0098], [0100]-[0102], [0105], [0114]; *Liu Provisional*, [0074]; *see also Liu Provisional*, [0073], [0075]-[0076], [0082], [0090]. As shown, the UE transmits a first BFRR ("**first radio signal**") to the base station on a first channel.

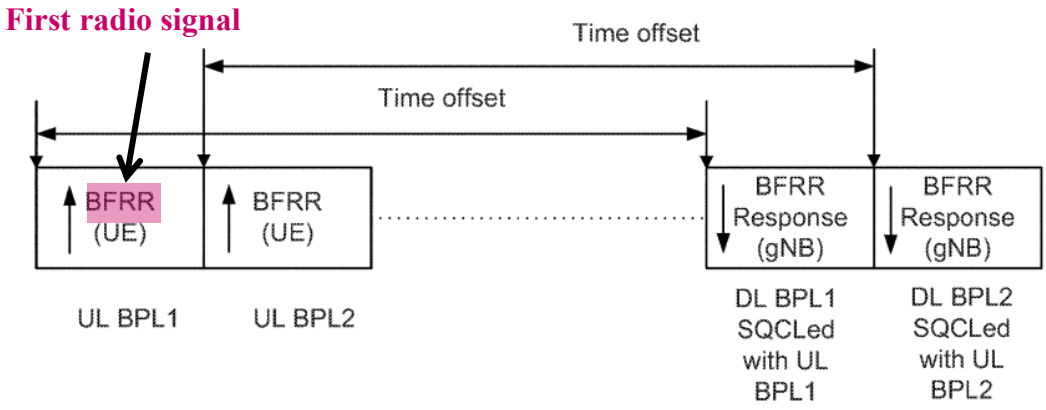

Liu, FIG. 5B (annotated); *Liu Provisional*, FIG. 5B.

85. Specifically, *Liu* discloses that "the user equipment 404 may use the active PUCCH (originally allocated for UCI) to report the beam failure and request recovery from the base station 402." *Liu*, [0084]; *see also Liu*, [0004]; *Liu Provisional*, [0062]; *see also Liu Provisional*, [0003].

86. The '113 patent's specification states that the claimed "first radio signal" can be a "beam recovery request." '113 patent, 3:41-42, *see also* '113 patent, 13:66-67. The '113 patent also states that "the first channel" can be "a PUCCH." '113 patent, 8:57. Accordingly, *Liu*'s first BFRR constitutes the claimed "first radio signal," and *Liu*'s PUCCH constitutes the claimed "first channel."

d. [1c]: "transmitting a second radio signal on a second channel; and"

87. After the first BFRR is sent, *Liu* discloses that the UE transmits a second BFRR ("**second radio signal**") to the base station on a second channel, as shown in annotated FIG. 5B below.

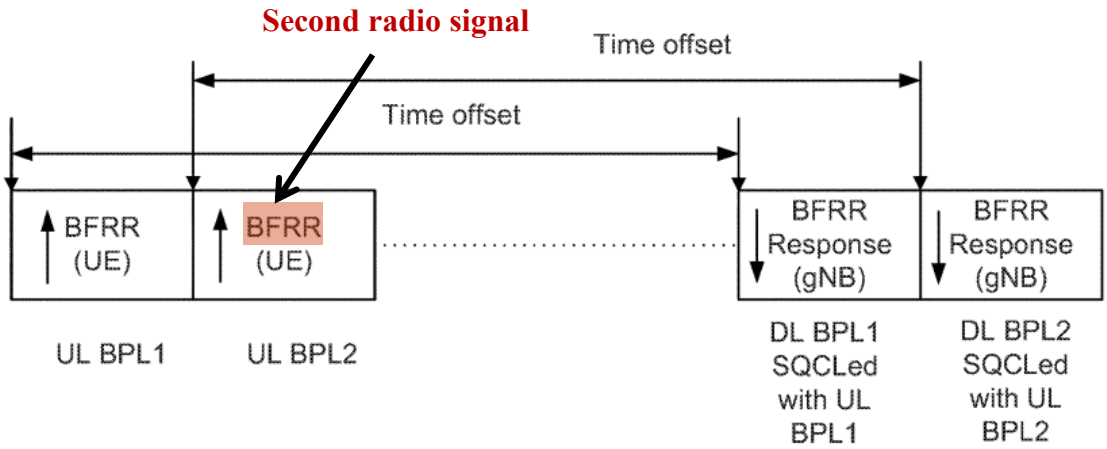

Liu, FIG. 5B (annotated); *Liu Provisional*, FIG. 5B.

88. As discussed above, *Liu* discloses that "the user equipment 404 may transmit multiple BFRRs in UL beam pairs (e.g., [UL BPL1, UL BPL2])." *Liu*, [0099], FIG. 5B; *Liu Provisional*, [0074], FIG. 5B. The first BFRR may be sent through the "PUCCH," as discussed for claim [1b]. In addition, *Liu* explains that the UE may also use a "Physical Random Access Channel (PRACH)" or "PRACH-like" channel for BFRR. *Liu*, [0004], [0084], [0092]; *Liu Provisional*, [0003], [0062], [0069].

89. The '113 patent's specification states that the claimed "second radio signal" can be a "beam recovery request[]." '113 patent, 13:66-67. The '113 patent

also states that "the second channel" can be "a physical layer random access channel." '113 patent, 8:64-65. Therefore, *Liu*'s second BFRR constitutes the claimed "second radio signal," and *Liu*'s PRACH constitutes the claimed "second channel."

90. To the extent Patent Owner argues *Liu* does not expressly disclose that the first BFRR is sent through the PUUCH and the second BFRR is sent through the PRACH, it would have been obvious, as explained below for claim [3]. *See infra* claim [3].

e. [1d]: "monitoring a third radio signal in a first time window;"

91. After sending the first and second BFRRs, *Liu*'s UE monitors for a BFRR response ("**third radio signal**") from the base station in a time window ("**first time window**") from the starting point of the depicted time offset for the first BFRR response to the end point of the depicted time offset for the second BFRR response, as shown in annotated FIG. 5B below. *Liu*, [0099]; *Liu Provisional*, [0074].

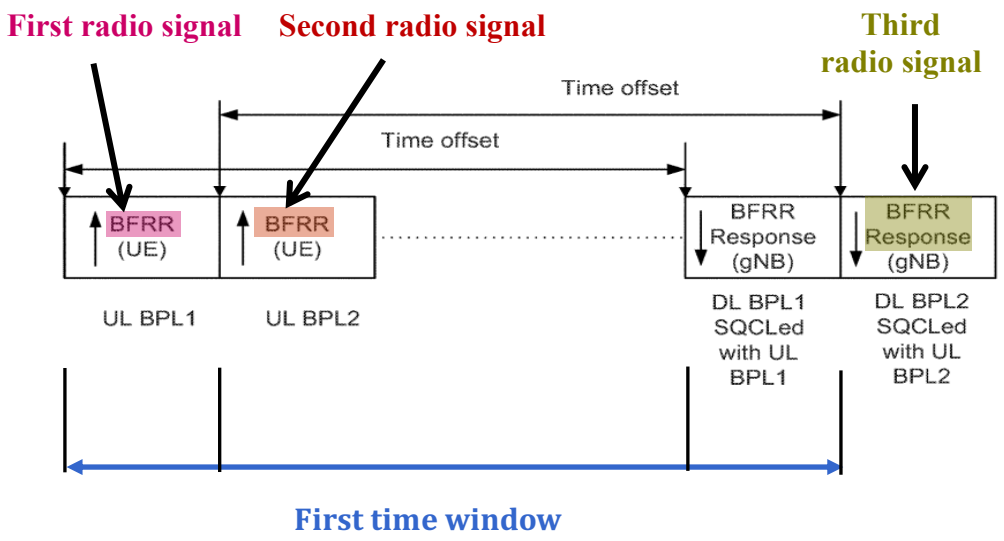

Liu, FIG. 5B (annotated); *Liu Provisional*, FIG. 5B.

92. *Liu*'s UE may monitor for the BFRR response in a number of ways, including: "(1) monitoring the SQCL'ed DL beam pairs for the BFRR response simultaneously (if the user equipment 404 Rx capability permits), (2) monitoring the 'best' SQCL'ed DL beam pair (e.g., the candidate beam having the best channel quality) for the BFRR response, [or] (3) indicating a preferred DL beam pair in the BFRR to the base station 402, in which the user equipment 404 monitors the indicated DL beam pair according to the time offset (in this case, the user equipment 404 may only monitor one DL beam, so a recommendation is made as to the best performing beam)." *Liu*, [0099]; *Liu Provisional*, [0074].

93. *Liu* further discloses that "each BFRR is associated with a BFRR response," or "all BFRRs are associated with one BFRR response." *Liu*, [0119]; *Liu*

Provisional, [0095]. Thus, *Liu* acknowledges that there may be a single BFRR response for both the first and second BFRR, or alternatively, there may be a BFRR response for each of the first and second BFRRs. *See also*, *Liu*, FIG. 5B; *Liu Provisional*, FIG. 5B.

94. The '113 patent's specification states that the "third radio signal" can be "a response to the second radio signal," or "a response to the first radio signal and the second radio signal." '113 patent, 10:47-49, 10:63-64. Thus, either the second BFRR response or both the first and second BFRR responses in *Liu* constitute the claimed "third radio signal."

95. Moreover, as shown in annotated FIG. 5B above, *Liu* monitors the BFRR response in a "first time window" between the starting point of the depicted time offset for the first BFRR response and the end point of the depicted time offset for the second BFRR response. For example, *Liu* explains that "a transmission occasion association between the BFRR (sent by the user equipment 404) and the BFRR response (sent by the base station 2402) is used to monitor the DL beams." *Liu*, [0096]; *Liu Provisional*, [0071]. *Liu* also discloses that "the transmission occasion association is indicated by a time offset such that UE should monitor the DL beams for the BFRR response from the base station 402, which is SQCL'ed with the BFRR from the user equipment 404, in a time slot with a time offset relative to the

BFRR." *Liu*, [0096]; *Liu Provisional*, [0071]. *Liu* further explains that the time slot is a time window for UE monitoring BFRR response and the time offset indicates the starting position of the response monitoring window relative to the BFRR. *Liu*, [0096], [0029], [0054], FIG. 5B; *Liu Provisional*, [0071], [0013], [0032], FIG. 5B. *Liu*'s UE thus monitors for one or more BFRR responses in the "first time window," as claimed.

96. Moreover, the concept of "monitoring" for a BFRR response was previously discussed in 3GPP working group meetings, and thus, was well known to a POSITA before the priority date of the '113 patent. For example, *R1-1710596* discloses that "an important feature of 5G NR is beam management…. To manage and maintain effective beam link pairs, recovery from beam failures is needed. A UE may initiate the beam recovery process by sending beam failure recovery request to gNB". Ex. 1006, 1. Further, it was discussed that "[a]fter sending the beam recovery request, either through PRACH or PUCCH, the UE waits for response from the gNB," and that "a UE should monitor PDCCH from gNB continuously in the time window." Ex. 1006, 4.

97. Also, the configuration and size/location of the "first time window" were discussion topics for the 3GPP working group meetings long before the priority date of the '113 patent. For example, *R1-1710078* discloses that

"[d]etection of a gNB's response for beam failure recovery request during a time window is supported," that "the time window is configured or pre-determined," and that "[i]f not detected after a certain number of transmission(s), UE notifies higher layer entities." Ex. 1021, 1; *see also* Ex. 1006, 2.

f. [1e]: "wherein a measurement for the target radio signal obtains a target measurement value, the target measurement value, when higher than a target threshold is used for triggering the transmission of the first radio signal and the second radio signal;"

98. *Liu* in combination with *Jover* renders obvious this limitation.

99. *Liu* discloses that a detection of a beam failure triggers transmission of the first and second BFRRs ("first radio signal" and "second radio signal") to the base station. *Liu*, [0005], [0078], [0084], [0114]; *Liu Provisional*, [0004], [0056], [0062], [0090]. *Liu* also discloses that the UE measures "the channel quality" of the reference signal, such as a CSI-RS or a synchronization signal ("target radio signal"). *Liu*, [0069], [0076]-[0077], [0087], [0091]; *Liu Provisional*, [0047], [0054]-[0055], [0091].

100. A POSITA would have found it obvious to modify *Liu*'s method to determine the beam failure based on a triggering condition with a predetermined threshold, as taught by *Jover*. For example, *Jover* discloses detecting a communication impairment (e.g., a connection failure) between

an endpoint device (e.g., a UE) and a base station. *Jover*, [0040]. *Jover* explains that "a communication impairment may comprise a decreased signal-to-noise ratio (SNR), decreased signal-to-interference-and-noise (SINR) ratio, decreased received signal strength indication (RSSI) and/or an increased bit-error rate (BER) detected at the endpoint device 300." *Jover*, [0039]. In one example, *Jover* discloses that the communication impairment is detected by "a **threshold** drop in the SNR or SINR (e.g., a 20 percent drop as compared to a preceding time period)[,] an **increase in the BER** (e.g., when the **BER increases beyond one percent**), and so forth." *Jover*, [0040]. *Jover* further discloses that when "one or more of such threshold conditions are met, the wireless channel sensing engine 320 may signal to the beam-forming engine 310 to begin the beam sweeping procedure." *Jover*, [0040]. Thus, *Jover* specifically discloses using a target measurement value (BER) that is higher than a target threshold (1%) as a triggering condition, as claimed.

101. It would have been obvious to implement *Jover*'s teachings in *Liu*'s method to use a beam failure triggering condition with BER as the target measurement value, as taught by *Jover*. *Jover*, [0039]-[0040]. Both *Liu* and *Jover* involve wireless communications between a UE and a base station. *Liu*, FIG. 1; *Liu Provisional*, FIG. 1; *Jover*, FIG. 1. Both references are also

specifically directed to detecting a communication failure between the UE and the base station. *Liu*, [0005], [0069], [0076]-[0078], [0084], [0087], [0091], [0114], FIG. 1; *Liu Provisional*, [0004], [0047], [0054]-[0056], [0062], [0090], FIG. 1; *Jover*, [0039]-[0040], FIG. 3. And *Jover* provides further detail about how the communication failure is determined, explaining that it may be determined by using a target measurement value (BER) that is higher than a target threshold (1%) as a triggering condition. *Jover*, [0039]-[0040].

102. A POSITA would have been motivated to adopt *Jover*'s triggering condition in *Liu*'s method to determine when to send the first and second BFRRs. *Liu* already discloses that the transmission of the first and second BFRRs to the base station are triggered by the detection of a communication failure. And *Jover* simply provides further details about how and when to implement *Liu*'s teachings regarding the detection of the communication failure, and a POSITA would have been motivated and found it obvious to look to *Jover* to understand and implement its additional teachings. A POSITA also would have been motivated to implement *Jover*'s triggering condition in *Liu*'s method to improve the accuracy and reliability of the beam failure determination. For example, a triggering condition based on BER would have provided threshold measurements to ensure a beam failure detection is

appropriate. Ex. 1013 (*Vembu*), 7:25-32 ("[i]f the BER rises above threshold by more than a predetermined amount, the system is no longer operating nominally."), 7:37-47 ("receiver 112 is described as determining whether or not the system is at, above, or below threshold and whether the system is operating nominally," and "send[ing] a command to transmitter 108 (108 b, 108 a) instructing transmitter 108 change modes when appropriate."). Further, a POSITA would have been motivated to implement *Jover*'s triggering condition because of the known benefits of evaluating BER. Ex. 1009 (*Pandey*), 463 (disclosing that "[t]he most meaningful criterion for evaluation of performance of communication systems is the bit error rate (BER)"); Ex. 1013 (*Vembu*), 7:25-32, 7:37-47. Thus, a POSITA would have been motivated to implement *Jover*'s triggering condition in *Liu*'s method because of the advantages provided by *Jover*'s triggering condition.

103. A POSITA would have had a reasonable expectation of success as it would have been straightforward for a POSITA to implement *Jover*'s triggering condition in *Liu*'s method. As mentioned above, both *Liu* and *Jover* include similar components that perform similar functions, and both *Liu* and *Jover* detect communication failures between the UE and the base station. Also, evaluating BER was well known and widely used long before August 11, 2017. *See, e.g.*, Ex. 1009 (*Pandey*), 463-466; Ex. 1013 (*Vembu*), 7:25-32,

7:37-47. Thus, it would have been straightforward to add *Jover*'s triggering condition (BER) to *Liu*'s existing method. For example, a POSITA could have easily updated the existing software in *Liu*'s UE to enable the UE to calculate BER and compare it to a threshold value for determining whether to trigger the beam failure recovery. Further, implementing *Jover*'s teachings in *Liu* would have yielded predictable results—namely, accurately and reliably determining beam failures.

104. Thus, *Liu* in combination *Jover* renders obvious limitation [1e].

g. [1f]: "a time resource occupied by the first radio signal is used for determining the start time of the first time window;"

105. As shown in annotated FIG. 5B below, *Liu* discloses that a time resource occupied by the first radio signal (first BFRR) is used for determining the start time of the first time window.

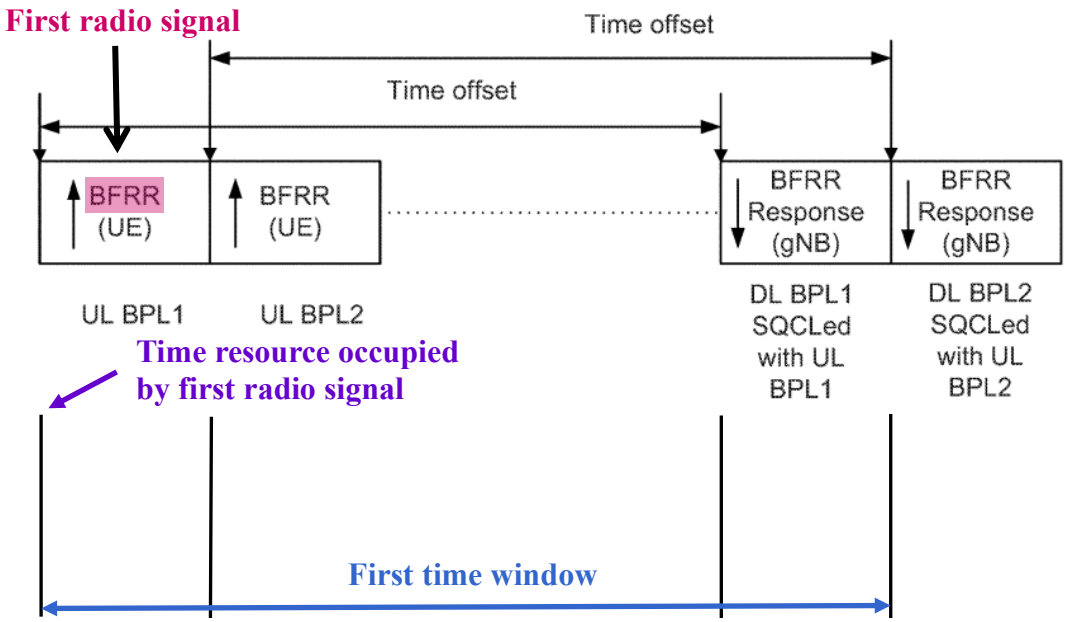

Liu, FIG. 5B (annotated); *Liu Provisional*, FIG. 5B.

106. A POSITA would have understood "a time resource occupied by the first radio signal" to include a start time of the first radio signal. This is consistent with the '113 patent, which explains that time domain resources of the first and second signals can be start times of the time windows. '113 patent, 23:13-22 ("a time domain resource occupied by the first radio signal is the start time of the second time window," and "a time domain resource occupied by the second radio signal is the start time of the third time window").

107. Further, as discussed above for claim [1d], *Liu* discloses monitoring for a BFRR response in the "first time window," and that monitoring begins in response to the first BFRR. *See* Section X.A.1.e. Thus, as shown above in

FIG. 5B, a time resource occupied by the first BFRR, for example, the start time of the first BFRR, is used for determining the start time of the first time window.

h. [1g]: "a time domain resource occupied by the first radio signal is used for determining a second time window,"

108. As shown in annotated FIG. 5B below, *Liu* discloses that a time domain resource occupied by the first radio signal (e.g., beginning at the starting point of the first BFRR) is used for determining a second time window (the depicted time offset for the first BFRR).

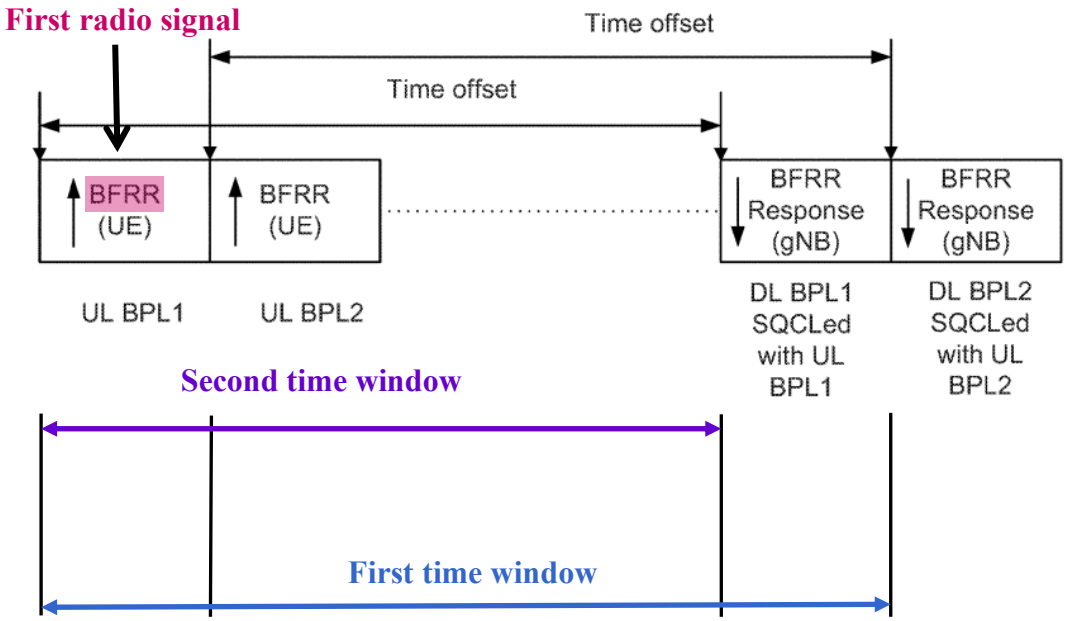

Liu, FIG. 5B (annotated); *Liu Provisional*, FIG. 5B.

109. As discussed above for claim [1d], *Liu* discloses that "the transmission occasion association is indicated by a time offset such that UE should

monitor the DL beams for the BFRR response from the base station 402, which is SQCL'ed with the BFRR from the user equipment 404, in a time slot with a time offset relative to the BFRR." *See* Section X.A.1.e; *Liu*, [0096]; *Liu Provisional*, [0071]. Thus, the depicted time offset for the first BFRR represents a "second time window" that begins in response to the first BFRR.

110. The '113 patent's specification states that "the start time of the second time window and the start time of the first time window are the same." '113 patent, 9:23-25. Just like the '113 patent, in *Liu*, the start time of the second time window and the start time of the first time window are the same.

i. [1h]: "a time domain resource occupied by the second radio signal is within the second time window, and the second time window is within the first time window;"

111. As shown in annotated FIG. 5B below, *Liu* discloses that a time domain resource occupied by the second radio signal (e.g., beginning at the starting point of the second BFRR) is within the second time window. Further, as shown in the figure, the second time window (the depicted time offset for the first BFRR) is within the first time window (from the starting point of the depicted time offset for the first BFRR response to the end point of the depicted time offset for the second BFRR response).

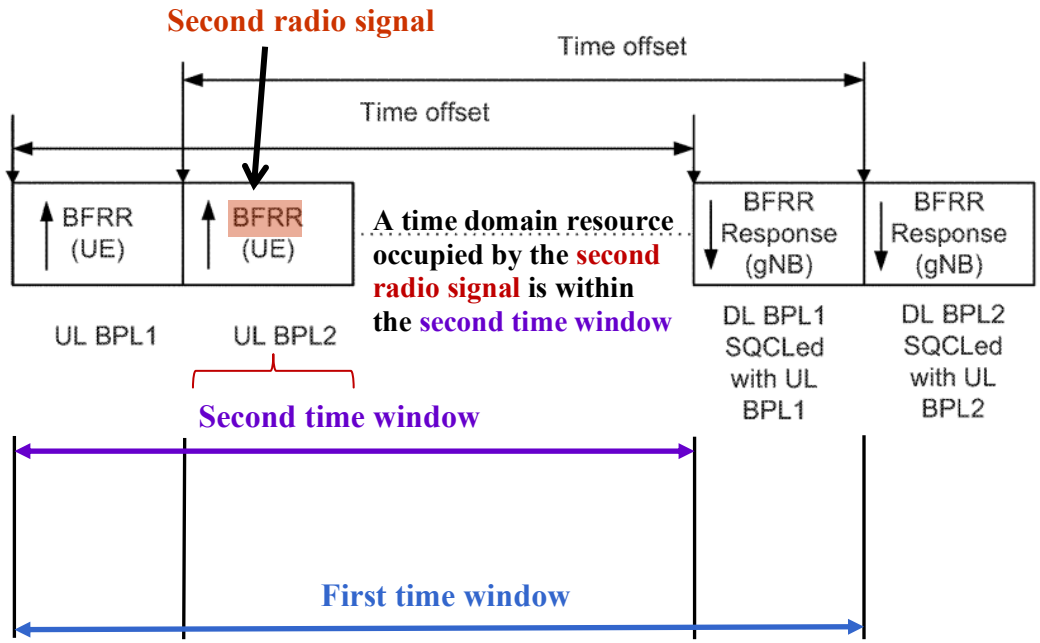

Liu, FIG. 5B (annotated); *Liu Provisional*, FIG. 5B.

j. [1i]: "a time domain resource occupied by the second radio signal is used for determining a third time window, and the end time of the third time window is the end time of the first time window; and"

112. As shown in annotated FIG. 5B below, *Liu* discloses that a time domain resource occupied by the second radio signal (e.g., beginning at the starting point of the second BFRR) is used for determining a third time window (the depicted time offset for the second BFRR). Also, as shown in the figure below, the end time of the third time window is the end time of the first time window.

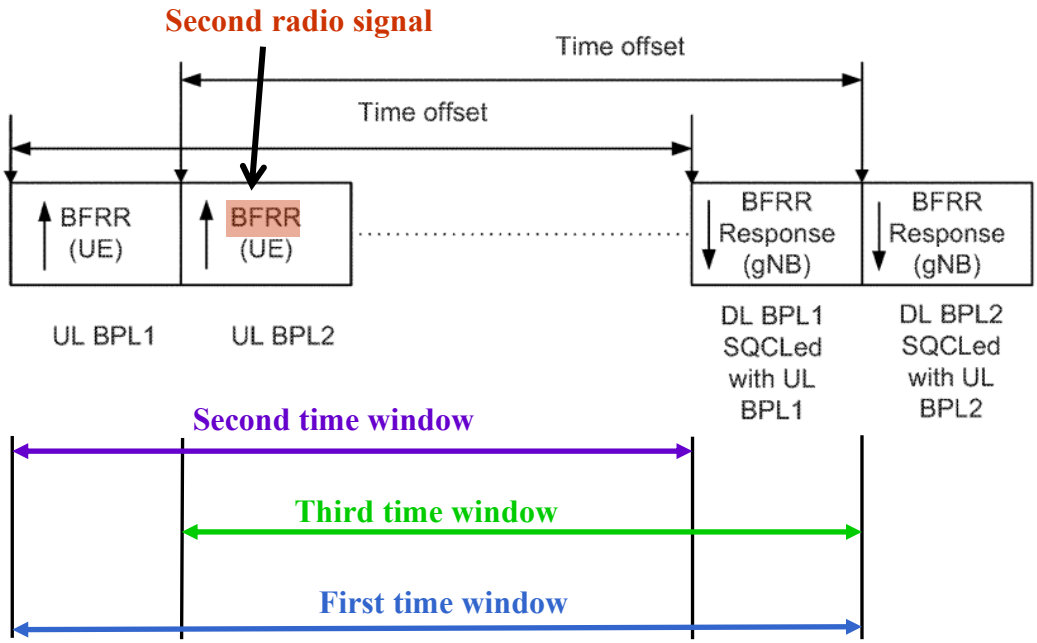

Liu, FIG. 5B (annotated); *Liu Provisional*, FIG. 5B.

113. As discussed above for claim [1d], *Liu* discloses that "the transmission occasion association is indicated by a time offset such that UE should monitor the DL beams for the BFRR response from the base station 402, which is SQCL'ed with the BFRR from the user equipment 404, in a time slot with a time offset relative to the BFRR." *See* Section X.A.1.e; *Liu*, [0096]; *Liu Provisional*, [0071]. Thus, the depicted time offset for the second BFRR represents a "third time window" that begins in response to the second BFRR.

114. As also discussed above for claim [1d], *Liu* acknowledges that there may be a single BFRR response for both the first and second BFRR, or alternatively, there may be a BFRR response for each of the first and second BFRRs. *See*

Section X.A.1.e; *Liu*, [0119], FIG. 5B; *Liu Provisional*, [0095], FIG. 5B. Further, as discussed above for claims [1f], [1g], and [1i], the "first time window" and the "third time window" are time windows for monitoring for a BFRR response. *See* Sections X.A.1.g, X.A.1.h, and X.A.1.j. Thus, as illustrated in FIG. 5B, both the "first time window" and the "third time window" end when the BFRR response is received.

k. [1j]: "the second time window and the third time window have overlapped time domain resource(s)."

115. As shown in annotated FIG. 5B below, *Liu* discloses that the second time window (the depicted time offset for the first BFRR) and the third time window (the depicted time offset for the second BFRR) have overlapped time domain resource(s).

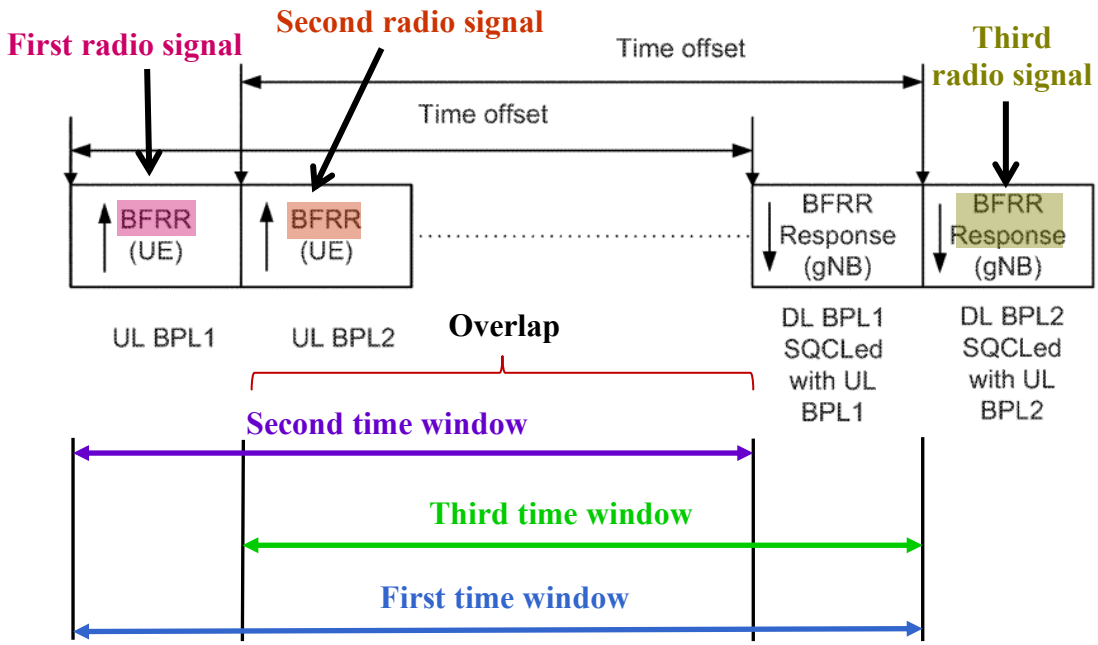

Liu, FIG. 5B (annotated); *Liu Provisional*, FIG. 5B.

116. Therefore, *Liu* in combination with *Jover* renders obvious claim 1.

2. Claim 2

a. [2a]: "The method according to claim 1, wherein at least one signal of the following set of signals: {the first radio signal, the second radio signal} is used for determining a multi-antenna related transmitting of the third radio signal; or,"

117. For the reasons discussed above, *Liu* in combination with *Jover* renders obvious claim 1. *Liu* further discloses a multiple-input multiple-output (MIMO) system with multiple antenna arrangements in the base station and the user equipment. *Liu*, [0061], [0088], [0093], FIG. 4C; *Liu Provisional*, [0039], [0063]-[0066]. As discussed above in Section VI.A, MIMO technology uses multiple antennas to form one or more beams for transmitting and receiving signals between the UE and the base station. Thus, "multi-antenna related receiving" refers to the beam(s) used to receive a signal.

118. As discussed for claim [1d], *Liu*'s base station transmits a BFRR response ("third radio signal") in response to the two BFRRs. *See* Section X.A.1.e. *Liu* also discloses that each BFRR sent from the UE may indicate a preferred DL beam pair in the BFRR to the base station. *Liu*, [0099]; *Liu Provisional*, [0074]. *Liu* further explains that the UE monitors and identifies a "candidate

beam" that may be used by the base station. *Liu Provisional*, [0084]-[0089]; *Liu Provisional*, [0007], [0063]-[0065].

119. *Liu* further discloses that the base station's downlink (DL) BFRR response beam is quasi co-located with the UE's uplink (UL) BFRR beam. Specifically, *Liu* discloses that "in the event of a beam failure, the user equipment 404 sends a BFRR in the UL beam pair (UL BPL) to the base station 402," and [i]n return, the base station 402 responds with a BFRR response in the DL beam pair (DL BPL) **that is SQCL'ed with** the UL beam pair used for BFRR transmission by the user equipment 404." *Liu*, [0096]; *Liu Provisional*, [0071]. As a result, the "UE should monitor the DL beams for the BFRR response from the base station 402, **which is SQCL'ed with** the BFRR from the user equipment 404, in a time slot with a time offset relative to the BFRR." *Liu*, [0096]; *Liu Provisional*, [0071].

120. Thus, in *Liu*, the multi-antenna related transmitting of the BFRR response from the base station is determined based on the UL BFRR from the UEs. And, because there are two BFRRs, determining the multi-antenna related transmitting of the BFRR response can be based on one of three scenarios: (1) based on the first BFRR; (2) based on the second BFRR; or (3) based on both the first and second BFRRs. *See e.g., Liu*, [0119] ("each BFRR is associated with a BFRR response," or "all BFRRs are associated with one

BFRR response"); *Liu Provisional*, [0095]. In other words, in *Liu*, at least one signal of the following set of signals {first BFRR, second BFRR} is used for determining a multi-antenna related transmitting of the BFRR response.

121. Moreover, the concept of determining "multi-antenna related transmitting" of a beam failure recovery response was previously discussed in 3GPP working group meetings, and thus, was well known to a POSITA before the priority date of the '113 patent. For example, *R1-1710596* discloses that UE beam failure recovery mechanism includes "[n]ew candidate beam identification," and beam failure recovery request transmission includes "[e]xplicit/implicit information about identifying UE and whether or not new candidate beam exists." *R1-1710596* also discloses that "[t]o receive gNB response for beam failure recovery request, a UE monitors NR PDCCH with the assumption that the corresponding PDCCH DM-RS is spatial QCL'ed with RS of the UE-identified candidate beam(s)." Ex. 1006, 1; *see also* Ex. 1021, 1. That is, the candidate beam information included in the beam failure recovery request (the "first radio signal" and/or the "second radio signal") is used for determining a multi-antenna related transmitting of the gNB response for beam failure recovery request (the "third radio signal").

122. *R1-1710078* further provides the details as to how both the first radio signal and the second radio signal are used for determining a multi-antenna related transmitting of the third radio signal. For example, as shown in FIG. 4 below, *R1-1710078* discloses that "a UE may monitor the NR-PDCCH on multiple beams. This may be accomplished by configuring beam-specific CORESETs as shown in Figure 4(a). The CORESETs may also be mapped on different OFDM symbols in case of analog beams. The CORESET configuration contains a QCL parameter associating the DMRS antenna ports with a beam management RS. Alternatively, multiple beams may be used for search space candidates associated with a single CORESET. In this case multiple QCL parameters are needed to associate different subsets of NR-PDCCH candidates with different beam management RS configurations. An illustration is shown in Figure 4(b)." Ex. 1016, 4-5.

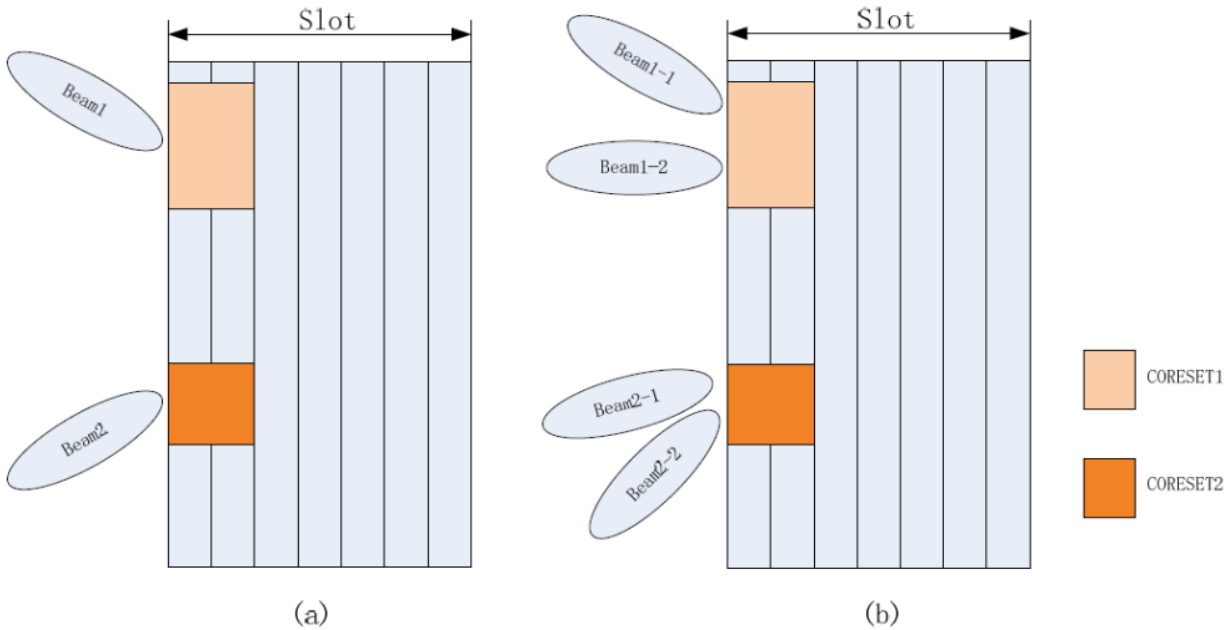

Figure4: Beam operation for UE-specific NR-PDCCH

Ex. 1021, FIG. 4

b. [2b]: "the first radio signal and the second radio signal together are used for determining the multi-antenna related transmitting of the third radio signal."

123. Claim 2 includes an "or" between claim [2a] and [2b], so only one of the two limitations must be taught to satisfy claim 2.

124. Nonetheless, *Liu* discloses this limitation in scenario (3) discussed above, where the multi-antenna related transmitting of the BFRR response is based on both the first and second BFRRs. *See also Liu*, [0119] ("all BFRRs are associated with one BFRR response."); *Liu Provisional*, [0095].

3. Claim 3

a. "The method according to claim 1, wherein the first channel is a first type of physical layer channel, the

second channel is a second type of physical layer channel, and the first type of physical layer channel and the second type of physical layer channel are two different types of physical layer channels."

125. As discussed above, *Liu* in combination with *Jover* renders obvious claim 1. As discussed for claim [1b] and claim [1c], *Liu*'s PUCCH (Physical Uplink Control Channel) constitutes the claimed "first channel," and *Liu*'s PRACH (Physical Random Access Channel) constitutes the claimed "second channel." *See* Sections X.A.1.c and X.A.1.d. The term "Physical" in the names "Physical Uplink Control Channel" and "Physical Random Access Channel" denotes that it is a physical layer channel. Thus, the PUCCH and the PRACH are both physical layer channels, and the PUCCH is a different type of physical layer channel than the PRACH, as claimed.

126. To the extent Patent Owner argues that *Liu* does not expressly disclose that the first BFRR is sent through a PUCCH and the second BFRR is sent through a PRACH, it would have been obvious. Indeed, *Liu* discloses sending multiple BFRRs and the ability to use both PUCCH and PRACH channels for a given BFRR. *Liu*, [0004], [0084], [0092], [0099]; *Liu Provisional*, [0003], [0062], [0069], [0074]. Thus, it would have been a matter of simple design choice between two known alternatives (using a PUCCH channel or a PRACH channel), which was well within the skill of a POSITA.

127. A POSITA would have been motivated to use different channels for the first and second BFRRs to ensure greater reliability of the base station's response. For example, if the PUCCH is being used to send the first BFRR and await a subsequent response, the second BFRR can be sent through the PRACH. Further, different channels may be used so that both BFRRs can be sent simultaneously. Sending a request through multiple, different channels increases the chances that the base station will receive the request and respond accordingly. It also may decrease the response time from the base station because one channel may be processed faster than another at a given time.

128. A POSITA would have had a reasonable expectation of success as it would have been straightforward for a POSITA to modify *Liu*'s method so that the first BFRR is sent through a PUCCH and the second BFRR is sent through a PRACH. As mentioned above, *Liu* already discloses sending multiple BFRRs and the ability to use both PUCCH and PRACH channels for a given BFRR. *Liu*, [0004], [0084], [0092], [0099]; *Liu Provisional*, [0003], [0062], [0069], [0074]. Thus, it would have been straightforward for a POSITA to use one channel for the first BFRR and another channel for the second BFRR.

4. Claim 4

a. "The method according to claim 1, wherein the first channel is a physical layer control channel."

129. As discussed above, *Liu* in combination with *Jover* renders obvious claim 1. As discussed for claims [1b] and [3], *Liu*'s PUCCH (Physical Uplink Control Channel) constitutes the claimed "first channel." *See* Sections X.A.1.c and X.A.3. The term "Control" in the name "Physical Uplink Control Channel" denotes that it is a control channel. Further, as discussed above, PUUCH is also a physical layer channel. Thus, the PUCCH is a physical layer control channel, as claimed.

5. Claim 5

a. [5a]: "The method according to claim 1, wherein the first radio signal is used for determining a first antenna port group, and the first antenna port group is spatially related to an antenna port group used for transmitting the third radio signal, the being spatially related refers to being Quasi Co-Located ('QCL'); or,"

130. As discussed above, *Liu* in combination with *Jover* renders obvious claim 1. As discussed for claim 2, *Liu* further discloses that the base station's BFRR response beam is quasi co-located with the UE's BFRR beam. *See* Section X.A.2. For example, *Liu* discloses that "the base station 402 responds with a BFRR response in the DL beam pair (DL BPL) **that is SQCL'ed with** the

UL beam pair used for BFRR transmission by the user equipment 404." *Liu*, [0096]; *Liu Provisional*, [0071].

131. A POSITA would have understood that, because the base station's BFRR response beam is quasi co-located with the UE's BFRR beam, the antenna port(s) for the BFRR response are SQCL'ed with the antenna port(s) for the BFRRs. For example, *R1-1700771* defines "QCL" as follows: "[t]wo antenna ports are said to be quasi co-located if properties of the channel over which a symbol on one antenna port is conveyed can be inferred from the channel over which a symbol on the other antenna port is conveyed." Ex. 1022, 1; *see also*, *Liu*, [0088] ("[t]wo antenna ports may be said to be SQCL'ed if large-scale properties of a radio channel over which a symbol on one antenna port is conveyed can be inferred from a radio channel over which a symbol on the other antenna port is conveyed.").

132. As discussed above for claim 2, in *Liu*, determining the multi-antenna related transmitting of the BFRR response can be based on one of three scenarios: (1) based on the first BFRR; (2) based on the second BFRR; or (3) based on both the first and second BFRRs. *See* Section X.A.2. In scenarios (1) and (3), the first BFRR ("first radio signal") is used for determining the antenna port group used for transmitting the BFRR response ("third radio signal"), as claimed. And thus, in scenarios (1) and (3), the

antenna port group for the first radio signal is quasi co-located with the antenna port group used for transmitting the third radio signal.

b. [5b]: "the first time window is divided into a second time interval and a third time interval, the second time interval is before the third time interval, the third time interval is behind a time domain resource occupied by the second radio signal, the first radio signal is used for determining a second antenna port group, in the second time interval, the second antenna port group is spatially QCL with an antenna port group used for transmitting the third radio signal in the second time interval, the second radio signal is used for determining a third antenna port group; in the third time interval, the third antenna port group is spatially QCL with an antenna port group used for transmitting the third radio signal in the third time interval."

133. Claim 5 includes an "or" between claim [5a] and [5b], so I understand only one of the two limitations must be taught to satisfy claim 5, and thus, the above-discussed teachings of claim [5a] are sufficient to satisfy claim 5.

6. Independent Claim 6

a. [6pre]: "A method in a base station device for wireless communication, comprising:"

134. As discussed for claim [1pre], *Liu* discloses a wireless communication system in which a UE communicates with a base station. *See* Section X.A.1.a; *Liu*, [0056]-[0060]; *Liu Provisional*, [0034]-[0038]. In particular, *Liu* discloses a "base station that may implement the methods and teachings according to this disclosure." *Liu*, [0111]; *Liu Provisional*, [0087]. And,

although this wireless communication method is primarily described from the perspective of the UE, *Liu* also discloses the corresponding method performed by the base station because the method involves the UE wirelessly interfacing with the base station. For example, a radio signal that is transmitted from the UE is also received by the base station for wireless communication. Likewise, a radio signal that is received by the UE is also transmitted by the base station for wireless communication.

b. [6a]: "transmitting a target radio signal;"

135. As discussed for claim [1a], *Liu*'s UE receives a reference signal ("target radio signal") from a base station. *See* Section X.A.1.b; *Liu*, [0069]-[0070], [0087], [0091], [0076]-[0077]; *Liu Provisional*, [0047]-[0048], [0054]-[0055]. Thus, *Liu* also discloses the base station "transmitting a target radio signal."

c. [6b]: "receiving a first radio signal on a first channel;"

136. As discussed for claim [1b], *Liu*'s UE transmits a first BFRR ("first radio signal") to the base station via a PUCCH ("first channel"). *See* Section X.A.1.c; *Liu*, [0084], [0098]-[0104], [0105], [0114]; *Liu Provisional*, [0062], [0073]-[0076], [0078]-[0079], [0082], [0090]. *Liu* further discloses that, in response to the BFRR, the base station transmits a BFRR response. *Liu*, [0084], [0086], [0096], [0098], [0099], [0106], [0119], FIG. 5B; *Liu*

Provisional, [0062]-[0064], [0070]-[0074], [0079]-[0081], [0095], FIG. 5B. A POSITA would have understood that, because the base station sends a response, it must have received the request. Thus, *Liu* discloses the base station "receiving a first radio signal on a first channel."

d. [6c]: "receiving a second radio signal on a second channel; and"

137. As discussed for claim [1c], *Liu* discloses, or in the alternative, renders obvious that the UE transmits a second BFRR ("second radio signal") to the base station via a PRACH ("second channel"). *See* Section X.A.1.d; *Liu*, [0084], [0098]-[0104], [0105], [0114]; *Liu Provisional*, [0062], [0073]-[0076], [0078]-[0079], [0082], [0090]. *Liu* further discloses that, in response to the BFRR, the base station transmits a BFRR response. *Liu*, [0084], [0086], [0096], [0098], [0099], [0106], [0119], FIG. 5B; *Liu Provisional*, [0062]-[0064], [0070]-[0074], [0079]-[0081], [0095], FIG. 5B. A POSITA would have understood that, because the base station sends a response, it must have received the request. Thus, *Liu* also discloses, or in the alternative, renders obvious the base station "receiving a second radio signal on a second channel."

e. [6d]: "transmitting a third radio signal in a first time window;"

138. As discussed for claim [1d], *Liu*'s UE monitors a BFRR response ("third radio signal") from the base station in a time window from the starting point of the depicted time offset for the first BFRR in FIG. 5B and the end point of the depicted time offset for the second BFRR in FIG. 5B ("first time window"). *See* Section X.A.1.e; *Liu*, [0096], [0099], FIG. 5B; *Liu Provisional*, [0071], [0074], FIG. 5B. *Liu* further discloses that the base station transmits a BFRR response in the first time window. *Liu*, [0084], [0086], [0096], [0098], [0099], [0106], [0119], FIG. 5B; *Liu Provisional*, [0062]-[0064], [0070]-[0074], [0079]-[0081], [0095], FIG. 5B. Thus, *Liu* also discloses the base station "transmitting a third radio signal in a first time window."

f. [6e]: "wherein a measurement for the target radio signal obtains a target measurement value, the target measurement value, when higher than a target threshold, is used for triggering the transmission of the first radio signal and the second radio signal;"

139. As discussed for claim [1e], *Liu* in combination with *Jover* renders this limitation obvious. *See* Section X.A.1.f.

g. [6f]: "a time resource occupied by the first radio signal is used for determining the start time of the first time window;"

140. As discussed for claim [1f], *Liu* discloses this limitation. *See* Section X.A.1.g.

h. [6g]: "a time domain resource occupied by the first radio signal is used for determining a second time window,"

141. As discussed for claim [1g], *Liu* discloses this limitation. *See* Section X.A.1.h.

i. [6h]: "a time domain resource occupied by the second radio signal is within the second time window, and the second time window is within the first time window;"

142. As discussed for claim [1h], *Liu* discloses this limitation. *See* Section X.A.1.i.

j. [6i]: "a time domain resource occupied by the second radio signal is used for determining a third time window, and the end time of the third time window is the end time of the first time window; and"

143. As discussed for claim [1i], *Liu* discloses this limitation. *See* Section X.A.1.j.

k. [6j]: "the second time window and the third time window have overlapped time domain resource(s)."

144. As discussed for claim [1j], *Liu* discloses this limitation. *See* Section X.A.1.k.

145. Therefore, *Liu* in combination with *Jover* renders obvious claim 6.

7. Claim 7

a. [7a]: "The method according to claim 6, wherein at least one signal of the following set of signals: {the first radio signal, the second radio signal} is used for determining a multi-antenna related transmitting of the third radio signal; or,"

146. For the reasons discussed above, *Liu* in combination with *Jover* renders obvious claim 6. As discussed for claim [2a], *Liu* discloses this additional limitation of claim [7a]. *See* Section X.A.2.a.

b. [7b]: "the first radio signal and the second radio signal together are used for determining the multi-antenna related transmitting of the third radio signal."

147. As discussed for claim [2b], *Liu* discloses this additional limitation of claim [7b]. *See* Section X.A.2.b.

8. Claim 8

a. "The method according to claim 6, wherein the first channel is a first type of physical layer channel, the second channel is a second type of physical layer channel, and the first type of physical layer channel and the second type of physical layer channel are two different types of physical layer channels."

148. For the reasons discussed above, *Liu* in combination with *Jover* renders obvious claim 6. As discussed for claim 3, *Liu* discloses, or in the alternative, renders obvious this additional limitation of claim 8. *See* Section X.A.3.

9. Claim 9

a. "The method according to claim 6, wherein the first channel is a physical layer control channel."

149. For the reasons discussed above, *Liu* in combination with *Jover* renders obvious claim 6. As discussed for claim 4, *Liu* discloses this additional limitation of claim 9. *See* Section X.A.4.

10. Claim 10

a. [10a]: "The method according to claim 6, wherein the first radio signal is used for determining a first antenna port group, and the first antenna port group is spatially related to an antenna port group used for transmitting the third radio signal, the being spatially related refers to being Quasi Co-Located ('QCL'); or,"

150. For the reasons discussed above, *Liu* in combination with *Jover* renders obvious claim 6. As discussed for claim [5a], *Liu* discloses this additional limitation of claim [10a]. *See* Section X.A.5.a.

b. [10b]: "the first time window is divided into a second time interval and a third time interval, the second time interval is before the third time interval, the third time interval is behind a time domain resource occupied by the second radio signal, the first radio signal is used for determining a second antenna port group, in the second time interval, the second antenna port group is spatially QCL with an antenna port group used for transmitting the third radio signal in the second time interval, the second radio signal is used for determining a third antenna port group; in the third time interval, the third antenna port group is spatially QCL with an antenna port group used for

transmitting the third radio signal in the third time interval."

151. Claim 10 includes an "or" between claim [10a] and [10b], so I understand only one of the two limitations must be taught to satisfy claim 10, and thus, the above-discussed teachings of claim [10a] are sufficient to satisfy claim 10.

11. Independent Claim 11

a. [11pre]: "A UE for wireless communication, comprising:"

152. As discussed for claim [1pre], *Liu* discloses a wireless communication system in which a UE communicates with a base station. *See* Section X.A.1.a; *Liu*, [0056]-[0060]; *Liu Provisional*, [0034]-[0038]. *Liu* also discloses "a method for beam failure recovery in user equipment." *Liu*, [0005]; *Liu Provisional*, [0004].

153. *Liu* further discloses the structure of the UE and how it is used for wireless communication. As shown in FIG. 7A below, the UE 700 includes at least one processor 704, at least one transceiver 702, one or more input/output devices 708, at least one antenna 710, and at least one memory 706. *See Liu*, [0107]-[0110]; *Liu Provisional*, [0083]-[0086], FIG. 7A.

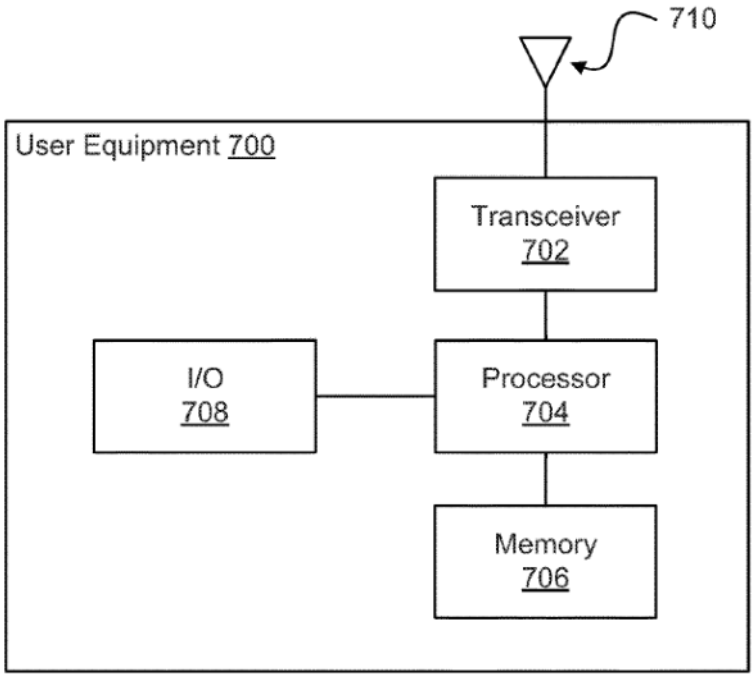

Liu, FIG. 7A; *Liu Provisional*, FIG. 7A.

154. *Liu* discloses that "one or multiple transceivers 702 could be used in the UE 700," and that "a transceiver 702 may also be implemented using at least one transmitter and at least one separate receiver." *Liu*, [0108]; *Liu Provisional*, [0084]. Thus, *Liu*'s UE has one or more transmitters and one or more receivers. *Liu* further discloses that "[e]ach transceiver 702 may include any suitable structure for generating signals for wireless transmission and/or processing signals received wirelessly." *Liu*, [0108]; *Liu Provisional*, [0084].

155. In addition, each transceiver 702 (or separate transmitter/receiver) is "configured to demodulate data or other content received by the at least one antenna 710," and "[e]ach antenna 710 includes any suitable structure for

transmitting and/or receiving wireless signals." *Liu*, [0108]; *Liu Provisional*, [0084]. Thus, a POSITA would have understood that each antenna in *Liu*'s UE may be associated with a transmitter and a receiver.

156. Moreover, as discussed for claim [2a], *Liu* discloses a MIMO system, including multiple antenna arrangements in the user equipment. *See* Section X.A.2.a; *Liu*, [0061], [0088], [0093], FIG. 4C; *Liu Provisional*, [0039], [0063]-[0066]. Thus, a POSITA would have understood that, with a multiple antenna arrangement, *Liu*'s UE would have multiple transmitters and multiple receivers for transmitting and receiving wireless signals. Furthermore, a POSITA would have understood that, in MIMO systems, each antenna arrangement (and therefore each transmitter and receiver associated with that antenna) is capable of transmitting and receiving any given wireless signal that goes into or out of the UE.

157. As shown in FIG. 8 below, *Liu* also discloses a network device 800 that may be used to facilitate communications between the UE and the base station. *Liu*, [0113]; *Liu Provisional*, [0089]. A POSITA would have understood that this network device 800 can be part of the UE. The network device 800 includes a memory 820 that includes a "receiving module 821A receiving spatial quasi co-located information between a downlink beam pair and an uplink beam pair from a base station and receiving an association indication

between the downlink beam pair for a beam failure recovery request (BFRR) response and the uplink beam pair for the BFRR," "a transmitting module 821D transmitting multiple BFRRs in two or more uplink beam pairs simultaneously and transmitting multiple BFRRs in the uplink beam pairs in time division duplex (TDD)," "a sending module 821B sending a BFRR to the base station upon detection of a beam failure between the base station and the user equipment," and "a monitoring module 821C monitoring one or more available candidate beams in which to receive the BFRR response from the base station, where the BFRR response is associated with the BFRR." *Liu*, [0114]; *Liu Provisional*, [0090], FIG. 8.

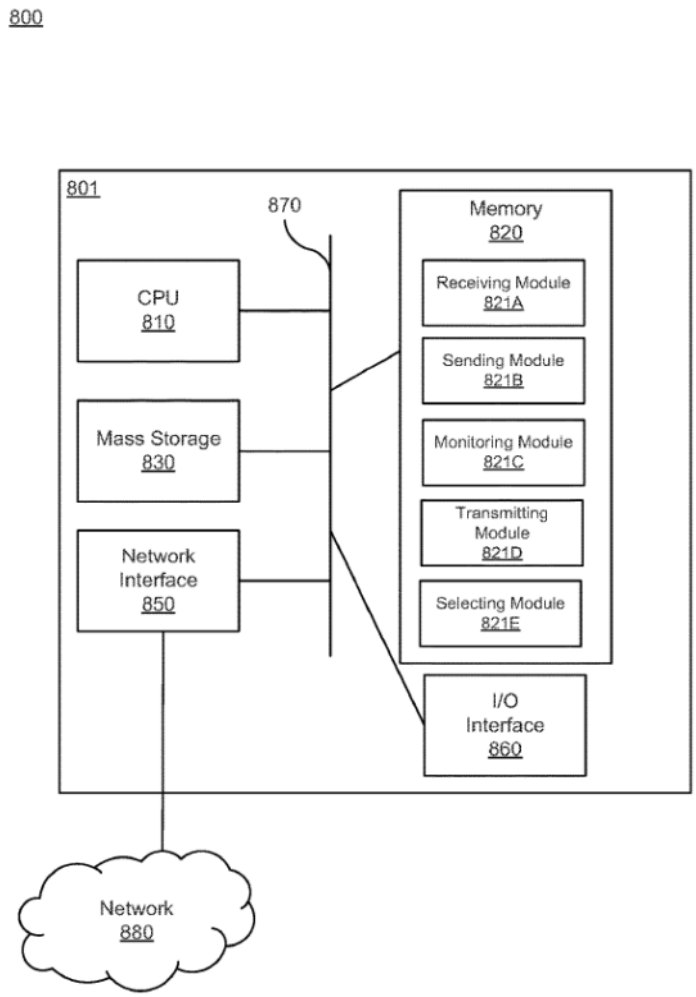

Liu, FIG. 8; *Liu Provisional*, FIG. 8.

b. [11a]: "a first receiver module, to receive a target radio signal;"

158. As discussed for claim [1a], *Liu*'s UE receives a target radio signal. *See* Section X.A.1.b. *Liu* discloses the claimed "first receiver module" in at least two ways.

159. First, as discussed for claim [11pre], *Liu*'s UE can have multiple receivers for receiving wireless signals. *See* Section X.A.11.a. Thus, a POSITA would

understand that a first one of the receivers in *Liu*'s UE constitutes "a first receiver module, to receive a target radio signal."

160. Second, as also discussed for claim [11pre], *Liu*'s UE can also include a receiving module 821A for receiving beam information from the base station. *See* Section X.A.11.a. Thus, a POSITA would understand that *Liu*'s receiving module 821A constitutes "a first receiver module, to receive a target radio signal."

c. [11b]: "a second transmitter module, to transmit a first radio signal on a first channel;"

161. As discussed for claim [1b], *Liu*'s UE transmits a first radio signal on a first channel. *See* Section X.A.1.c. *Liu* discloses the claimed "second transmitter module" in at least two ways.

162. First, as discussed for claim [11pre], *Liu*'s UE can have multiple transmitters for transmitting wireless signals. *See* Section X.A.11.a. Thus, a POSITA would understand that a first one of the transmitters in *Liu*'s UE constitutes "a second transmitter module, to transmit a first radio signal on a first channel."

163. Second, as also discussed for claim [11pre], *Liu*'s UE can also include a sending module 821B for sending a BFRR to the base station. *See* Section X.A.11.a. Thus, a POSITA would understand that *Liu*'s sending module

821B constitutes "a second transmitter module, to transmit a first radio signal on a first channel."

d. [11c]: "a third transmitter module, to transmit a second radio signal on a second channel; and"

164. As discussed for claim [1c], *Liu* discloses, or in the alternative, renders obvious that the UE transmits a second radio signal on a second channel. *See* Section X.A.1.d. *Liu* discloses, or in the alternative, renders obvious the claimed "third transmitter module" in at least two ways.

165. First, as discussed for claim [11pre], *Liu*'s UE can have multiple transmitters for transmitting wireless signals, and in MIMO systems, multiple antenna arrangements (and therefore multiple transmitters associated with those arrangements) transmit wireless signals that go out of the UE. *See* Section X.A.11.a. Thus, a POSITA would understand that a second one of the transmitters in *Liu*'s UE discloses, or in the alternative, renders obvious "a third transmitter module, to transmit a second radio signal on a second channel."

166. Second, as also discussed for claim [11pre], *Liu*'s UE can also include a transmitting module 821D for transmitting multiple BFRRs. *See* Section X.A.11.a. Thus, a POSITA would understand that *Liu*'s transmitting module 821D discloses, or in the alternative, renders obvious "a third transmitter module, to transmit a second radio signal on a second channel."

e. [11d]: "a fourth receiver module, to monitor a third radio signal in a first time window;"

167. As discussed for claim [1d], *Liu*'s UE monitors a third radio signal in a first time window. *See* Section X.A.1.e. *Liu* discloses the claimed "fourth receiver module" in at least two ways.

168. First, as discussed for claim [11pre], *Liu*'s UE can have multiple receivers for receiving wireless signals, and in MIMO systems, multiple antenna arrangements (and therefore multiple receivers) receive wireless signals that go into the UE. *See* Section X.A.11.a. Thus, a POSITA would understand that a second one of the receivers in *Liu*'s UE constitutes "a fourth receiver module, to monitor a third radio signal in a first time window."

169. Second, as also discussed for claim [11pre], *Liu*'s UE can also include a monitoring module 821C for monitoring the BFRR response from the base station. *See* Section X.A.11.a. Thus, a POSITA would understand that *Liu*'s monitoring module 821C constitutes "a fourth receiver module, to monitor a third radio signal in a first time window."

f. [11e]: "wherein a measurement for the target radio signal obtains a target measurement value, the target measurement value, when higher than a target threshold, is used for triggering the transmission of the first radio signal and the second radio signal;"

170. As discussed for claim [1e], *Liu* in combination with *Jover* renders this limitation obvious. *See* Section X.A.1.f.

g. [11f]: "a time resource occupied by the first radio signal is used for determining the start time of the first time window;"

171. As discussed for claim [1f], *Liu* discloses this limitation. *See* Section X.A.1.g.

h. [11g]: "a time domain resource occupied by the first radio signal is used for determining a second time window,"

172. As discussed for claim [1g], *Liu* discloses this limitation. *See* Section X.A.1.h.

i. [11h]: "a time domain resource occupied by the second radio signal is within the second time window, and the second time window is within the first time window;"

173. As discussed for claim [1h], *Liu* discloses this limitation. *See* Section X.A.1.i.

j. [11i]: "a time domain resource occupied by the second radio signal is used for determining a third time window, and the end time of the third time window is the end time of the first time window; and"

174. As discussed for claim [1i], *Liu* discloses this limitation. *See* Section X.A.1.j.

k. [11j]: "the second time window and the third time window have overlapped time domain resource(s)."

175. As discussed for claim [1j], *Liu* discloses this limitation. *See* Section X.A.1.k.

176. Therefore, *Liu* in combination with *Jover* renders obvious claim 11.

12. Claim 12

a. [12a]: "The UE according to claim 11, wherein at least one signal of the following set of signals: {the first radio signal, the second radio signal} is used for determining a multi-antenna related transmitting of the third radio signal; or,"

177. For the reasons discussed above, *Liu* in combination with *Jover* renders obvious claim 11. As discussed for claim [2a], *Liu* discloses this additional limitation of claim [12a]. *See* Section X.A.2.a.

b. [12b]: "the first radio signal and the second radio signal together are used for determining the multi-antenna related transmitting of the third radio signal."

178. As discussed for claim [2b], *Liu* discloses this additional limitation of claim [12b]. *See* Section X.A.2.b.

13. Claim 13

a. "The UE according to claim 11, wherein the first channel is a first type of physical layer channel, the second channel is a second type of physical layer channel, and the first type of physical layer channel and the second type of physical layer channel are two different types of physical layer channels."

179. For the reasons discussed above, *Liu* in combination with *Jover* renders obvious claim 11. As discussed for claim 3, *Liu* discloses, or in the alternative, renders obvious this additional limitation of claim 13. *See* Section X.A.3.

14. Claim 14

a. "The UE according to claim 11, wherein the first channel is a physical layer control channel."

180. For the reasons discussed above, *Liu* in combination with *Jover* renders obvious claim 11. As discussed for claim 4, *Liu* discloses this additional limitation of claim 14. *See* Section X.A.4.

15. Claim 15

a. [15a]: "The UE according to claim 11, wherein the first radio signal is used for determining a first antenna port group, and the first antenna port group is spatially related to an antenna port group used for transmitting the third radio signal, the being spatially related refers to being Quasi Co-Located ('QCL'); or,"

181. For the reasons discussed above, *Liu* in combination with *Jover* renders obvious claim 11. As discussed for claim [5a], *Liu* discloses this additional limitation of claim [15a]. *See* Section X.A.5.a.

b. [15b]: "the first time window is divided into a second time interval and a third time interval, the second time interval is before the third time interval, the third time interval is behind a time domain resource occupied by the second radio signal, the first radio signal is used for determining a second antenna port group, in the second time interval, the second antenna port group is spatially QCL with an antenna port group used for transmitting the third radio signal in the second time interval, the second radio signal is used for determining a third antenna port group; in the third time interval, the third antenna port group is spatially QCL with an antenna port group used for

transmitting the third radio signal in the third time interval."

182. Claim 15 includes an "or" between claim [15a] and [15b], so I understand only one of the two limitations must be taught to satisfy claim 15, and thus, the above-discussed teachings of claim [15a] are sufficient to satisfy claim 15.

16. Independent Claim 16

a. [16pre]: "A base station device for wireless communication, comprising:"

183. As discussed for claim [6pre], *Liu* discloses a wireless communication system in which a UE communicates with a base station. *See* Section X.A.6.a; *Liu*, [0056]-[0060]; *Liu Provisional*, [0034]-[0038]. *Liu* also discloses a "base station that may implement the methods and teachings according to this disclosure." *Liu*, [0111]; *Liu Provisional*, [0087].

184. *Liu* further discloses the structure of the base station and how it is used for wireless communication. As shown in FIG. 7B below, the base station 750 includes at least one processor 758, at least one transmitter 752, at least one receiver 754, one or more antennas 760, and at least one memory 756. *See Liu*, [0111]-[0112]; *Liu Provisional*, [0087]-[0088], FIG. 7B.

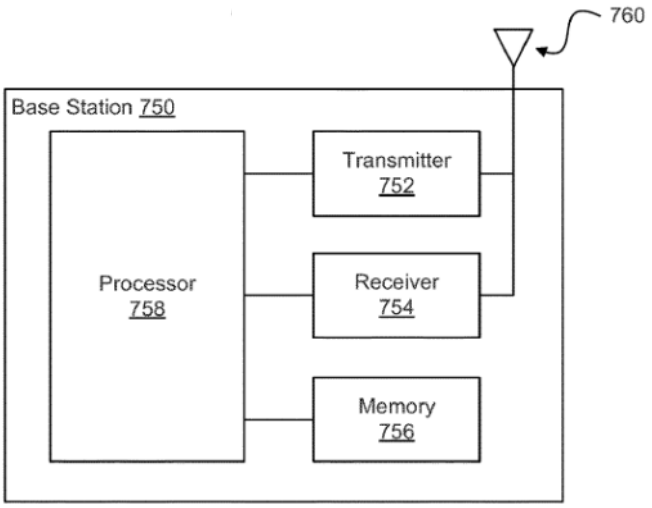

Liu, FIG. 7B; *Liu Provisional*, FIG. 7B.

185. *Liu* discloses that "[e]ach transmitter 752 includes any suitable structure for generating signals for wireless transmission to one or more UEs or other devices," while "[e]ach receiver 754 includes any suitable structure for processing signals received wirelessly from one or more UEs or other devices." *Liu*, [0112]; *Liu Provisional*, [0088]. *Liu* further discloses that "[e]ach antenna 760 includes any suitable structure for transmitting and/or receiving wireless signals," and that "one or more antennas 760 could be coupled to the transmitter(s) 752, and one or more separate antennas 760 could be coupled to the receiver(s) 754." *Liu*, [0112]; *Liu Provisional*, [0088]. Thus, a POSITA would have understood that each antenna in *Liu*'s base station may be associated with a transmitter and a receiver.

186. Moreover, as discussed for claim [2a], *Liu* discloses a MIMO system, including multiple antenna arrangements in the base station. *Liu*, [0061],

[0088], [0093], FIG. 4C; *Liu Provisional*, [0039], [0063]-[0066]. Thus, a POSITA would have understood that, with a multiple antenna arrangement, *Liu*'s base station would have multiple transmitters and multiple receivers for transmitting and receiving wireless signals. Furthermore, a POSITA would have understood that, in MIMO systems, each antenna arrangement (and therefore each transmitter and receiver associated with that antenna) is capable of transmitting and receiving any given wireless signal that goes into or out of the base station.

b. [16a]: "a first transmitter module, to transmit a target radio signal;"

187. As discussed for claim [6a], *Liu*'s base station transmits a target radio signal. *See* Section X.A.6.b. Further, as discussed for claim [16pre], *Liu*'s base station can have multiple transmitters for transmitting wireless signals. *See* Section X.A.16.a. Thus, a POSITA would understand that a first one of the transmitters in *Liu*'s base station constitutes "a first transmitter module, to transmit a target radio signal."

c. [16b]: "a second receiver module, to receive a first radio signal on a first channel;"

188. As discussed for claim [6b], *Liu*'s base station receives a first radio signal on a first channel. *See* Section X.A.6.c. Further, as discussed for claim [16pre], *Liu*'s base station can have multiple receivers for receiving wireless signals.

See Section X.A.16.a. Thus, a POSITA would understand that a first one of the receivers in *Liu*'s base station constitutes "a second receiver module, to receive a first radio signal on a first channel."

d. [16c]: "a third receiver module, to receive a second radio signal on a second channel; and"

189. As discussed for claim [6c], *Liu* discloses, or in the alternative, renders obvious the base station receives a second radio signal on a second channel. *See* Section X.A.6.d. Further, as discussed for claim [16pre], *Liu*'s base station can have multiple receivers for receiving wireless signals, and in MIMO systems, multiple antenna arrangements (and therefore multiple receivers) receive wireless signals that go into the base station. *See* Section X.A.16.a. Thus, a POSITA would understand that a second one of the receivers in *Liu*'s base station discloses, or in the alternative, renders obvious "a third receiver module, to receive a second radio signal on a second channel."

e. [16d]: "a fourth transmitter module, to transmit a third radio signal in a first time window;"

190. As discussed for claim [6d], *Liu*'s base station transmits a third radio signal in a first time window. *See* Section X.A.6.e. Further, as discussed for claim [16pre], *Liu*'s base station can have multiple transmitters for transmitting wireless signals, and in MIMO systems, multiple antenna arrangements (and

therefore multiple transmitters) transmit wireless signals that go out of the base station. *See* Section X.A.16.a. Thus, a POSITA would understand that a second one of the transmitters in *Liu*'s UE constitutes "a fourth transmitter module, to transmit a third radio signal in a first time window."

f. [16e]: "wherein a measurement for the target radio signal obtains a target measurement value, the target measurement value, when higher than a target threshold, is used for triggering the transmission of the first radio signal and the second radio signal;"

191. As discussed for claim [6e], *Liu* in combination with *Jover* renders this limitation obvious. *See* Section X.A.6.f.

g. [16f]: "a time resource occupied by the first radio signal is used for determining the start time of the first time window;"

192. As discussed for claim [6f], *Liu* discloses this limitation. *See* Section X.A.6.g.

h. [16g]: "a time domain resource occupied by the first radio signal is used for determining a second time window,"

193. As discussed for claim [6g], *Liu* discloses this limitation. *See* Section X.A.6.h.

i. [16h]: "a time domain resource occupied by the second radio signal is within the second time window,

and the second time window is within the first time window;"

194. As discussed for claim [6h], *Liu* discloses this limitation. *See* Section X.A.6.i.

j. [16i]: "a time domain resource occupied by the second radio signal is used for determining a third time window, and the end time of the third time window is the end time of the first time window; and"

195. As discussed for claim [6i], *Liu* discloses this limitation. *See* Section X.A.6.j.

k. [16j]: "the second time window and the third time window have overlapped time domain resource(s)."

196. As discussed for claim [6j], *Liu* discloses this limitation. *See* Section X.A.6.k.

197. Therefore, *Liu* in combination with *Jover* renders obvious claim 16.

17. Claim 17

a. [17a]: "The base station device according to claim 16, wherein at least one signal of the following set of signals: {the first radio signal, the second radio signal} is used for determining a multi-antenna related transmitting of the third radio signal; or,"

198. For the reasons discussed above, *Liu* in combination with *Jover* renders obvious claim 16. As discussed for claim [2a], *Liu* discloses this additional limitation of claim [17a]. *See* Section X.A.2.a.

b. [17b]: "the first radio signal and the second radio signal together are used for determining the multi-

antenna related transmitting of the third radio signal."

199. As discussed for claim [2b], *Liu* discloses this additional limitation of claim [17b]. *See* Section X.A.2.b.

18. Claim 18

a. "The base station device according to claim 16, wherein the first channel is a first type of physical layer channel, the second channel is a second type of physical layer channel, and the first type of physical layer channel and the second type of physical layer channel are two different types of physical layer channels."

200. For the reasons discussed above, *Liu* in combination with *Jover* renders obvious claim 16. As discussed for claim 3, *Liu* discloses, or in the alternative, renders obvious this additional limitation of claim 18. *See* Section X.A.3.

19. Claim 19

a. "The base station device according to claim 16, wherein the first channel is a physical layer control channel."

201. For the reasons discussed above, *Liu* in combination with *Jover* renders obvious claim 16. As discussed for claim 4, *Liu* discloses this additional limitation of claim 19. *See* Section X.A.4.

20. Claim 20

a. [20a]: "The base station device according to claim 16, wherein the first radio signal is used for determining

a first antenna port group, and the first antenna port group is spatially related to an antenna port group used for transmitting the third radio signal, the being spatially related refers to being QCL; or,"

202. For the reasons discussed above, *Liu* in combination with *Jover* renders obvious claim 16. As discussed for claim 5[a], *Liu* discloses this additional limitation of claim 20[a]. *See* Section X.A.5.a.

b. [20b]: "the first time window is divided into a second time interval and a third time interval, the second time interval is before the third time interval, the third time interval is behind a time domain resource occupied by the second radio signal, the first radio signal is used for determining a second antenna port group, in the second time interval, the second antenna port group is spatially QCL with an antenna port group used for transmitting the third radio signal in the second time interval, the second radio signal is used for determining a third antenna port group; in the third time interval, the third antenna port group is spatially QCL with an antenna port group used for transmitting the third radio signal in the third time interval."

203. Claim 20 includes an "or" between claim [20a] and [20b], so I understand only one of the two limitations must be taught to satisfy claim 20, and thus, the above-discussed teachings of claim [20a] are sufficient to satisfy claim 20.

XI. <u>CONCLUSION</u>

204. In signing this declaration, I understand that the declaration will be filed as evidence in a contested case before the Patent Trial and Appeal Board of the

United States Patent and Trademark Office. I acknowledge that I may be subject to cross-examination in the case and that cross-examination will take place within the United States. If cross-examination is required of me, I will appear for cross-examination within the United States during the time allotted for cross-examination.

205. I declare that all statements made herein of my knowledge are true and that all statements made on information and belief are believed to be true; and further, that these statements were made with knowledge that willful false statements and the like so made are punishable by fine or imprisonment, or both, under 18 U.S.C. § 1001.

206. I declare under penalty of perjury under the laws of the United States of America that the foregoing is true and correct.

Date: February 28, 2023 By: _____

Harry V. Bims

Appendix A

Dr. Harry V. Bims
Protocomm Systems, LLC
2665 Marine Parkway, Suite 1140
Mountain View, CA 94043
harrybims@me.com
650-283-4174

PROFESSIONAL SUMMARY

Harry Bims, PhD, EE, provides expert witness support services for telecommunications-related intellectual property litigation. These services include deposition and court testimony, expert reports, and infringement research, for patent, copyright, and trade secret litigation matters. He has 30+ years of telecommunications industry experience, and holds twenty-two US patents in network architecture and chip design for wireless communications.

EMPLOYMENT HISTORY

12/2001 - 05/2004 **AirFlow Networks, Inc. LLC ● Sunnyvale, California**

Position: *CEO/CTO & Founder*

As the sole founder of the company, created the original business plan, raised venture capital, and hired the core engineering team. Grew the company to 32 people and shipped products for revenue in the US and overseas. Fifteen patents on the core technology have issued. These patents, which relate to wireless network infrastructure based on the 802.11 specification, have been sold to Broadcom.

03/2001 - 12/2001 **Bay Partners LLC ● Cupertino, California**

Position: *Entrepreneur in Residence*

Reported to the partners of this VC firm as a technology expert on a range of wireless and networking subjects. Reviewed business plans and participated in due diligence activities related to several startups seeking funding. Developed a business plan for a startup that builds network infrastructure for 802.11 enterprise networks.

09/1999 - 03/2001 **Symmetry Communications Systems LLC ● San Jose, California**

Position: *Director, Software Architecture*

Reporting to the CEO, responsible for the software architecture of their core SGSN and GGSN products for the GPRS market. Formulated a software technology roadmap, showing the evolution from 2.5G to 3G SGSN and GGSN products. Management responsibility for Firmware, Hardware, Performance, and Systems Engineering Groups. Provided management support of early field trials of the system on a global basis.

07/1999 - 09/1999 **T-SPAN Systems Corporation LLC ● Palo Alto, California**

Position: *Member of Technical Staff*

Designed a wireless home LAN protocol for the company. Also designed and built a PC-based platform to demonstrate their technology. Company is now publicly traded as Atheros Communications.

07/1992 - 12/1998 **Glenayre Technologies-Wireless Access Group ● San Jose, California**

Position: *Member of Technical Staff; Sr. Member of Technical Staff; Manager of NOC Systems*

Employee #6 at the company, which was acquired by Glenayre Technologies, Nov 1997. Designed and built a 4-channel ReFLEX50 pager demonstration in 1 week. Participated in early field trials and feasibility studies, culminating in a Pioneer's Preference license award from the FCC to SkyTel Corporation for Narrowband PCS development.

Invented, designed, and built from concept through full implementation, a patented two-way pager test system for the ReFLEX50 and ReFLEX25 protocols. This system was used throughout company operations for performance testing of the ReFLEX pager designs from Wireless Access, and Motorola. Over 16 systems were deployed around the country for manufacturing tests, engineering protocol tests, antenna tests, and pager repair tests.

The project required technical skills in PC hardware design, C++, object-oriented programming, signal processing techniques, NT device driver development, Win32 user interface development, real-time, multi-threaded control, and proficiency with wireless communications lab equipment. Three patents have been issued based on technical inventions in this capacity.

Co-developed a wireless application protocol for sending and receiving encrypted email messages over the paging channel. Led the project team that deployed a software encryption module based on this protocol for government agencies.

8/2018 – Present **CUPP Cybersecurity, LLC ● Palo Alto, California**

Position: *CEO*

Developing a suite of network security products and technologies aimed at consumers to protect their online internet access.

10/2012 – Present **BoughtStuff, Inc ● Palo Alto, California**

Position: *Founder*

The company has developed a mobile application for storage and delivery of product information to smartphones over wireless networks.

Bims Laboratories, Inc Work History

6/2009 – 7/2009 **Eastman Kodak Company ● Rochester, NY**

Position: *Technology Consultant*

Providing technology assessment on certain wireless communication patents.

10/2009 – 1/2017 **IEEE 802.16 Working Group**

Position: *Task Group Secretary, Task Group Vice-Chair, Task Group Chair, Working Group Vice-Chair & Secretary, IEEE 802.16 Expert*

Served in several leadership capacities within this group that is working on improvements to the IEEE 802.16 standard, otherwise known as WiMAX. The 802.16 Working Group entered hibernation on March 2018. From that time until the present, I am on the roster of Experts designated by the Chair to answer questions and provide clarification about the 802.16 standards.

2/2014 – Present **Access Network Protocol Development**

Position: *Technical Lead Developer*

Developing a C++17-based DES of SDRs for wired and wireless network protocols, that includes IMT-2020 channel models. Implementations of the IEEE 802 and LTE protocol families, plus PTP, PPoE, IPv6, digital cable, Bluetooth, DSL, frame relay and many other managed node models for smart grid and vertical IoT applications. Used for technical analysis of emerging wireless standards amendments.

Protocomm Systems, LLC Consulting History

04/1999–07/1999 **Gigabit Wireless, Inc. ● San Jose, California**

Position: *Technical Leader*

Technical leader for the Wireless MAC design group. Responsible for comparative analysis of competing wireless MAC protocol standards. Responsible for the creation of a proprietary MAC protocol specification document, simulation of the protocol, and implementation in a prototype. Participated in early 802.16 protocol standards. This company was acquired by Intel Corporation.

3/2007 – 10/2009 **Apple, Inc. ● Cupertino, CA**

Position: *Technology Consultant*

Participating in IEEE 802.16 standards meetings as an affiliate of the client.

7/2003 – Present **Various expert witness engagements (see below)**

Position: *Technical Expert Witness*

Testified as a wireless technology expert in patent infringement cases. For a list of such cases, see below.

Technical Expert Witness Experience

7/2022 – Present **Client: Russ, August & Kabat LLP (representing Vivato, Inc.)**

Case: XR Communications, LLC d/b/a Vivato Technologies, Civil Action No. 8:17-cv-00596-DOC(JDE)

Location: UNITED STATES DISTRICT COURT FOR THE CENTRAL DISTRICT OF CALIFORNIA – Hon. David O. Carter

Testifying expert in these matters involving smart antenna technology.

Expert Declaration:

August 23, 2022 Rebuttal Expert Report on Validity

Attorneys: For Plaintiff: Russ, August & Kabat LLP

For Defendant:

Status: Case ongoing

2/2022 – 12/2022 **Client: Fish & Richardson LLP (representing Apple, Inc.)**

Case: Litigation between Ericsson and Apple in Belgium, Brazil, Germany, Netherlands, and Colombia, and US matters:

Ericsson Inc. et. al. v. Apple Inc., Civil Action No. 6:22-cv-00061-ADA

Ericsson Inc., et. al, v. Apple Inc., Civil Action No. 2:21-cv-00376

Apple Inc. v. Telefonaktiebolaget LM Ericsson, et. al., Civil Action No. 2:21-cv-00460

In the Matter of Certain Mobile Phones Tablet Computers, Smart Watches, Smart Speakers, and Digital Media Players, and Products Containing Same.

U.S. Int'l Trade Commission Inv. No. 337-TA-3596

Location: UNITED STATES DISTRICT COURT FOR THE WESTERN DISTRICT OF TEXAS WACO DIVISION – Hon. Alan D. Albright

UNITED STATES DISTRICT COURT FOR THE EASTERN DISTRICT OF TEXAS

UNITED STATES INTERNATIONAL TRADE COMMISSION

Testifying expert in these matters involving 5G networking technology.

Expert Declaration:

May 18, 2022 COLOMBIA: Invalidity and Non-Infringement Technical Opinion regarding certain Colombia patents

April 27, 2022 COLOMBIA: Invalidity and Non-Infringement Technical Opinion regarding certain Colombia patents #1

April 27, 2022 COLOMBIA: Invalidity and Non-Infringement Technical Opinion regarding certain Colombia patents #2

March 28, 2022 COLOMBIA: Invalidity and Non-Infringement Technical Opinion regarding certain Colombia patents

March 9, 2022 BRAZIL: Invalidity Technical Opinion regarding Brazil patents

May 26, 2022 BRAZIL: Response to Ericsson Statement regarding Brazil patents

August 25, 2022 BRAZIL: Live testimony before the Brazil Patent and Trademark Office regarding invalidity

Attorneys: For Plaintiff:

For Defendant: Fish & Richardson, LLP

Status: Case settled

1/2022 – Present **Client: Finnegan LLP (representing Toyota Motor Corp., et. al.)**

Case: Intellectual Ventures I LLC, et. al. v. Toyota Motor Corp., et. al., Civil Action No. 2:21-cv-389

Toyota Motor Corp. (Petitioner) v. Intellectual Ventures II, LLC (Patent Owner) Case No. IPR2022-01355

Location: UNITED STATES DISTRICT COURT FOR THE WESTERN DISTRICT OF TEXAS WACO DIVISION –

UNITED STATES PATENT AND TRADEMARK OFFICE BEFORE THE PATENT TRIAL AND APPEAL BOARD

Testifying expert in this District Court and PTAB matter involving IEEE 802.11 wireless networking.

Expert Declaration:

August 25, 2022 PTAB Declaration ISO Petition for IPR

Attorneys: For Plaintiff:

For Defendant/Petitioner: Finnegan, LLP

Status: Case ongoing

1/2022 – Present **Client: Stroock LLP (representing TrackThings LLC)**

Case: TrackThings LLC v. NETGEAR, Inc.; TrackThings LLC v. NETGEAR, Inc.; TrackThings LLC v. Amazon.com, Inc. and Amazon.com Services LLC, and eero LLC., Civil Action No. 6:21-cv-00720

Location: UNITED STATES DISTRICT COURT FOR THE WESTERN DISTRICT OF TEXAS WACO DIVISION – Hon. Alan D. Albright

Testifying expert in this District Court matter involving wireless network reconfiguration.

Expert Declaration:

March 10, 2022 Declaration in support of claim construction responses

Attorneys: For Plaintiff:

For Defendant: Stroock, LLP

Status: Case ongoing

12/2021 – Present **Client: Axinn Veltrop & Harkrider LLP (representing Samsung Electronics Co., Ltd)**

Case: TOT Power Control, S.L. v. Samsung Elecs. Co., Ltd and Samsung Elecs. Am. Inc., Civil Action No. 1:21-cv-01305.

Location: UNITED STATES DISTRICT COURT FOR THE DISTRICT OF DELAWARE

Testifying expert in this District Court matter involving power control methods in wireless systems.

Attorneys: For Plaintiff:

For Defendant: Axinn, LLP

Status: Case ongoing

10/2021 – Present **Client: Wilkie Farr & Gallagher LLP (representing Lenovo and Motorola)**

Case: IPR Petitions relating to Bell Northern Research, LLC. v. Lenovo Group, Ltd., Lenovo (United States) Inc., and Motorola Mobility LLC, Civil Action No. 6:21-cv-00847

Location: UNITED STATES PATENT AND TRADEMARK OFFICE BEFORE THE PATENT TRIAL AND APPEAL BOARD

Testifying expert in this IPR proceeding case involving training sequences in wireless networks.

Status: Case ongoing

10/2021 – 5/2022 **Client: Finnegan, Henderson, Farabow, Garrett & Dunner, LLP (representing MediaTek Inc.)**

Case: NXP USA, Inc. v. MediaTek Inc., et. al., Civil Action No. 2:21-cv-000318-JRG – Hon. Rodney Gilstrap

Location: UNITED STATES DISTRICT COURT FOR THE EASTERN DISTRICT OF TEXAS MARSHALL DIVISION

Testifying expert in this District Court matter involving 802.11n, 802.11ac, and 802.11ax chipsets.

Expert Report:

February 3, 2022 Declaration ISO Defendant's Claim Construction Brief

Attorneys: For Plaintiff: Duane Morris, LLP

For Defendant: Finnegan, LLP

Status: Case settled

09/2021 – Present **Client: Fish & Richardson, LLP (representing Samsung Electronics Co., Ltd., et. al.)**

Case: Smart Mobile Technologies, LLC v. Samsung Electronics Co., Ltd., et. al., Civil Action No. 6:21-cv-00701-ADA. Hon. Alan D. Albright

Location: UNITED STATES DISTRICT COURT FOR THE WESTERN DISTRICT OF TEXAS WACO DIVISION

Testifying expert in this District Court matter involving wireless voice and data transfer.

Expert Report:

June 8, 2022 Declaration ISO Defendant's Claim Construction Brief

Attorneys: For Plaintiff: Hagens Berman Sobol Shapiro, LLP

For Defendant: Fish & Richardson, LLP

Status: Case ongoing

05/2021 – Present **Client: Sidley Austin (representing HP Inc. and Microsoft Corporation)**

Case: SynKloud Technologies, LLC v. HP Inc., Civil Action No. 1:19-cv-01360-RGA and Microsoft Corporation v. SynKloud Technologies, LLC, Civil Action No. 1:20-cv-00007-RGA

Location: UNITED STATES DISTRICT COURT FOR THE DISTRICT OF DELAWARE

Testifying expert in this District Court matter involving wireless cloud storage.

Expert Report:

June 25, 2021 Declaration ISO Microsoft and HP's Claim Construction Brief

Expert Testimony:

Attorneys: For Plaintiff:

For Defendant: Sidley Austin

Status: Case ongoing

05/2021 – Present **Client: DLA Piper (representing Motorola Mobility LLC)**

Case: U.S. Int'l Trade Commission Inv. No. 337-TA-1253

Certain LTE-Compliant Cellular Communication Devices

Motorola v. Evolved Wireless LLC.

Location: UNITED STATES INTERNATIONAL TRADE COMMISSION – Administrative Law Judge Cameron R. Elliot

Testifying expert in this ITC matter involving LTE cellular device handover.

Expert Report:

November 16, 2021 Expert Report on NonInfringement and Lack of Technical Domestic Industry

Expert Testimony:

December 15, 2021 Deposition testimony

Attorneys: For Plaintiff: Nelson Bumgardner Albritton P.C.; Adduci, Mastriani & Schaumberg, LLP

For Defendant: DLA Piper

Status: Case ongoing

04/2021 – 6/2022 **Client: Desmarais LLP (representing Google LLC and FitBit Inc.)**

Case: Cellspin Soft, Inc. v. Fitbit, Inc., No. 4-17-cv-05928-YGR

Location: UNITED STATES DISTRICT COURT FOR THE NORTHERN DISTRICT OF CALIFORNIA

Hon. Yvonne Gonzalez Rogers

Testifying expert in this patent case involving the distribution of real-time health data.

Expert Testimony:

October 29, 2021 Expert Report on NonInfringement

Attorneys: For Plaintiff: Garteiser Honea PLLC and Corcoran IP Law PLLC

For Defendant: Desmarais LLP

Status: Case settled. Summary Judgment for Non-Infringement.

03/2021 – Present **Client: Fish & Richardson LLP (representing Samsung Electronics Co., Ltd, and Samsung Electronics America, Inc.)**

Case: Ericsson Inc., and Telefonaktiebolaget LM Ericsson v. Samsung Electronics Co., Ltd., and Samsung Electronics America, Inc.

U.S. Int'l Trade Commission Inv. No. 337-TA-1248

Certain Cellular Communications Infrastructure Systems, Components Thereof, and Products Containing Same

Location: UNITED STATES INTERNATIONAL TRADE COMMISSION

Testifying expert in this ITC matter involving cellular networking.

Attorneys: For Plaintiff:

For Defendant: Fish & Richardson LLP

Status: Case ongoing

02/2021 – Present **Client: Fish & Richardson (representing Quectel)**

Client: Axinn, Veltrop & Harkrider LLP (representing Thales DIS AIS USA, LLC)

Client: Pearl Cohen LLP (representing Telit)

Case: U.S. Int'l Trade Commission Inv. No. 337-TA-1240

Certain UMTS and LTE Cellular Communication Modules and Products Containing the Same

Koninklijke Philips N.V. v Quectel Wireless Solutions Co. Ltd., Thales DIS AIS Deutschland GmbH, Thales S.A., Telit Wireless Solutions, Inc., Telit Communications PLC, CalAmp Corp, Xirgo Technologies, LLC, Laird Connectivity, Inc., Thales DIS AIS USA LLC

Case No. 1:20-cv-1713 (D. Del)

Location: UNITED STATES INTERNATIONAL TRADE COMMISSION – Administrative Law Judge Hon. David P. Shaw

Testifying expert on 3GPP mobile device operation.

Expert Testimony:

July 21, 2021 Expert Report on Invalidity

	August 6, 2021	Deposition Testimony
	October 12, 2021	Live Testimony before ALJ David P. Shaw
Attorneys:	For Plaintiff:	Mayer Brown LLP
	For Defendants:	Fish & Richardson; Axinn, Veltrop & Harkrider LLP
Status:	Case closed	

11/2020– Present **Client: Orrick, Herrington & Sutcliffe LLP (representing PayPal Holdings, Inc.)**

Case: IOENGINE LLC v PayPal Holdings, Inc.

Civil Action No. 1:18-cv-00452-WCB

Location: UNITED STATES DISTRICT COURT FOR THE DISTRICT OF DELAWARE

Hon. William C. Bryson

Testifying expert in this patent case involving peripheral device communication to remote servers.

Expert Testimony:

November 19, 2021	Expert Report on Invalidity
January 7, 2022	Expert Report on Non-Infringement
January 20-21, 2022	Deposition Testimony on Invalidity and Non-Infringement

Status: Case ongoing

11/2020 – Present **Client: Holland & Knight (representing Apple, Inc.)**

Case: Maxell v. Apple Inc. In the Matter of Certain Mobile Electronic Devices and Laptop Computers

U.S. Int'l Trade Commission Inv. No. 337-TA-1215

Location: UNITED STATES INTERNATIONAL TRADE COMMISSION – Administrative Law Judge Hon. Dee Lord

Testifying expert on 3GPP mobile device operation.

Expert Testimony:

February 24, 2020: Opening Expert Report Regarding Invalidity

Attorneys:	For Plaintiff:	Mayer Brown LLP
	For Defendant:	DLA Piper LLP

Status: Case ongoing

9/2020– 9/2021 **Client: DickinsonWright (representing Nippon Telegraph & Telephone Co. and Essential WiFi, LLC)**

Case: NTT Corp., et. al. v. MediaTek, Acer, and Texas Instruments

Civil Action No. 1:20-cv-00632-ADA. Hon. Alan D. Albright

Location: UNITED STATES DISTRICT COURT FOR THE WESTERN DISTRICT OF TEXAS AUSTIN DIVISION – Hon. Alan Albright

Testifying expert in this patent case involving MIMO technology.

Expert Testimony:

Status: Case closed

8/2020– Present **Client: Folio Law Group PLLC (representing Dali Wireless)**

Case: Dali Wireless, Inc. v. Corning Optical Communications, LLC,

Civil Action No. 3:20-cv-06469-EMC

Location: UNITED STATES DISTRICT COURT FOR THE WESTERN DISTRICT OF TEXAS – Hon. Edward M. Chen

Testifying expert in this patent case involving distributed antenna system networks.

Expert Testimony:

November 6, 2020: Declaration Regarding Interpretation of Asserted Claims

February 12, 2021: Declaration Regarding Interpretation of Asserted Claims

August 22, 2022: Deposition Testimony

Status: Case ongoing

3/2020– Present **Client: Folio Law Group PLLC (representing Dali Wireless)**

Case: Dali Wireless, Inc. v. CommScope Technologies, LLC and CommScope Holding Company, Inc..

Civil Action No. 1:19-cv-00952-MN

Location: UNITED STATES DISTRICT COURT FOR THE DISTRICT OF DELAWARE – Hon. Maryellen Noreika

Testifying expert in this patent case involving distributed antenna system networks.

Expert Testimony:

June 23, 2021: Expert report on infringement.

August 16, 2021: Reply Expert report on infringement of ’338 Patent

Status: Case ongoing

03/2020 – Present **Client: Sidley Austin LLP (representing Lenovo and Motorola)**

Case: InterDigital Technology Corporation, IPR Licensing, Inc., InterDigital Communications, Inc., InterDigital Holdings, Inc., and InterDigital, Inc. v. Lenovo Holding Company, Inc., Lenovo (United States) Inc., and Motorola Mobility LLC

Civil Action No. 19-1590-LPS

Location: UNITED STATES DISTRICT COURT FOR THE DISTRICT OF DELAWARE

Hon. Leonard P. Stark

Testifying expert in this patent case involving 3G and 4G cellular standards.

Expert Testimony:

June 16, 2022: Expert Report on Invalidity of 8,675,612 and 9,456,449 patents

June 16, 2022: Expert Report on Invalidity of 8,085,665 and 8,427,954 patents

August 8, 2022: Rebuttal Expert Report on Invalidity

Status: Case ongoing

3/2020– Present **Client: Finnegan, Henderson, Farabow, Garrett & Dunner LLC (representing Google)**

Case: Google, Inc. (Petitioner) v. Sonos, Inc.

Location: UNITED STATES PATENT AND TRADEMARK OFFICE BEFORE THE PATENT TRIAL AND APPEAL BOARD

Testifying expert in this IPR proceeding involving wireless home speaker systems.

Expert Testimony:

February 22, 2021: Filed declarations in support of Inter Partes Review.

Status: Case ongoing

08/2019 – Present **Client: Fish & Richardson (representing Finjan, Inc.)**

Case: Finjan, Inc. v. Cisco, Inc.

Civil Action No. 5:17-cv-00072-BLF-SVK

Location: UNITED STATES DISTRICT COURT FOR THE SOUTHERN DISTRICT OF CALIFORNIA SAN DIEGO DIVISION – Hon. Susan Van Keulen

As a testifying expert, provided a technology tutorial in this patent case involving internet security technology.

Expert Testimony:

August 14, 2019 Tutorial expert report on network security technology.

September 4, 2019 Deposition Testimony

Attorneys: For Plaintiff: Fish & Richardson

For Defendant:

Status: Case ongoing

8/2019 – 5/2020 **Client: Fish & Richardson (representing LG Electronics, Inc.)**

Case: Bell Northern Research, LLC v. LG Electronics, Inc., et. al.

USDC-SDCA Civil Action No. 18-cv-2864-CAB-BLM

Location: UNITED STATES DISTRICT COURT FOR THE SOUTHERN DISTRICT OF CALIFORNIA – Hon. Cathy Ann Bencivengo, Magistrate Judge: Hon. Barbara L. Major

Testifying expert on wired/wireless communication in gaming systems.

Expert Testimony:

November 20, 2019 Declaration ISO motion for summary judgment

Attorneys: For Plaintiff: Skiermont Derby LLP

For Defendant: Fish & Richardson

Status: Case closed

7/2019 – 05/2021 **Client: O'Melveny & Myers LLP (representing Apple Inc.)**

Case: Maxell, Ltd. v. Apple Inc.,

Case No. 5:19-cv-00036-RWS.

Location: UNITED STATES DISTRICT COURT FOR THE EASTERN DISTRICT OF TEXAS TEXARKANA DIVISION – Hon. Robert W. Schroeder III

Testifying expert on 3G cellular telephone technology.

Expert Testimony:

May 7, 2020: Opening Expert Report Regarding Invalidity

June 4, 2020: Rebuttal Expert Report on Non-Infringement

Deposition Testimony: June 24, 2020

Attorneys: For Plaintiff: Mayer Brown LLP

For Defendant: O'Melveny & Myers LLP

Status: Case settled.

4/2019 – Present **Client: Perkins Coie (representing Nintendo of America, Inc.)**

Case: Genuine Enabling Technology LLC v. Nintendo Company Ltd., and Nintendo of America, Inc., W.D. Wash.,

Civil Action No. 2:19-cv-00351-RSM

Location: UNITED STATES DISTRICT COURT FOR THE WESTERN DISTRICT OF WASHINGTON – Hon. Ricardo S. Martinez

Testifying expert on wired/wireless communication in gaming systems.

Expert Declarations:

October 23, 2019 Declaration ISO claim constructions

November 26, 2019 Sur-reply declaration ISO claim constructions

January 23, 2020 Declaration ISO motion for summary judgment

April 20, 2020 Opening Expert Report Regarding Invalidity

Expert Depositions:

December 19, 2019

Claim Construction Hearing Testimony:

February 24, 2020 Tutorial testimony on the technology of the Asserted Patents

Attorneys: For Plaintiff: Bayard, P.A.

For Defendant: Perkins Coie

Status: Case closed

12/2019 – 12/2019 **Client: Erise IP (representing Apple Inc.), Haynes and Boone, LLP (representing Ericsson Inc)**

Case: Ericsson Inc. (Petitioner) v. Uniloc 2017, LLC (Patent Owner)

Apple Inc. (Petitioner) v. Uniloc 2017, LLC (Patent Owner) Case No. IPR2020-00224

Location: UNITED STATES PATENT AND TRADEMARK OFFICE BEFORE THE PATENT TRIAL AND APPEAL BOARD

Testifying expert in this IPR proceeding involving ARQ data exchange on LTE networks.

Expert Declarations:

December 16, 2019 Declaration ISO Petition for Inter Partes Review of U. S. Patent No. 7,075,917

Attorneys: For Petitioner: Erise IP; Haynes and Boone, LLP

For Patent Owner:

Status: Case closed

6/2019 – Present **Client: Fish & Richardson (representing Microsoft Corporation)**

Case: Microsoft Corp. (Petitioner) v. Uniloc 2017, LLC (Patent Owner)

Uniloc 2017, LLC v. Microsoft Corp.

USDC Central District of California, Case Nos. 8:18-cv-2053, 8:18-cv-2054, 8:18-cv-2224; 8:19-cv-0428, 8:19-cv-0477, 8:19-cv-0196

Location: UNITED STATES PATENT AND TRADEMARK OFFICE BEFORE THE PATENT TRIAL AND APPEAL BOARD

Testifying expert in this IPR procedding involving 3GPP transport formats and channels.

Expert Declarations:

August 6, 2019 Declaration in support of claim construction

Attorneys: For Plaintiff: Feinberg Day LLP

For Defendant: Fish & Richardson

Status: Case ongoing

2/2019 – 5/2020 **Client: Klarquist Sparkman, LLP (representing Microsoft Corporation)**

Case: Uniloc 2017, LLC v. Microsoft Corp.

Location: UNITED STATES PATENT AND TRADEMARK OFFICE BEFORE THE PATENT TRIAL AND APPEAL BOARD

Testifying expert in this IPR proceeding involving ARQ data exchange on LTE networks.

Expert Declarations:

April 14, 2019 Declaration ISO Petition for Inter Partes Review of U. S. Patent No. 7,075,917

Attorneys: For Plaintiff:

For Defendant: Klarquist LLP

Status: Case ongoing

10/2018 – Present **Client: Kramer Levin Naftalis & Frankel, LLP (representing Finjan, Inc.)**

Case: Finjan, Inc. v. Eset, Inc.

Civil Action No. 3:17-cv-00183-CAB-BGS

Location: UNITED STATES DISTRICT COURT FOR THE SOUTHERN DISTRICT OF CALIFORNIA SAN DIEGO DIVISION – Hon. Cathy Ann Bencivengo

As a testifying expert, provided a technology tutorial in this patent case involving internet security technology.

Expert Declaration:

October 5, 2018 Tutorial expert report on network security technology.

March 11, 2020 Jury trial testimony.

Attorneys: For Plaintiff: Kramer Levin, Naftalis, & Frankel LLP

For Defendant:

Status: Jury Trial Mistrial due to COVID-19.

Case ongoing

9/2018 – Present **Client: Kramer Levin Naftalis & Frankel, LLP (representing Finjan, Inc.)**

Case: Finjan, Inc. v. Juniper, Inc.

Civil Action No. 15-cv-03295-BLF-SVK

Location: UNITED STATES DISTRICT COURT FOR THE NORTHERN DISTRICT OF CALIFORNIA SAN JOSE DIVISION – Hon. Beth L. Freeman

As a testifying expert, provided a technology tutorial in this patent case involving internet security technology.

Expert Declaration:

September, 11, 2018 Tutorial expert report on network security technology.

Videotaped Deposition:

November 7, 2018

Attorneys: For Plaintiff: Kramer Levin, Naftalis, & Frankel LLP

For Defendant:

Status: Case closed

9/2017 – 9/2018 **Client: (Covington & Burling representing Huawei Device USA, Inc.)**

Case: Optis Wireless Technology, LLC, et. al. v. Huawei Technologies Co. Ltd, et. al.

Civil Action No. 2:17-cv-123-JRG-RSP

Location: UNITED STATES DISTRICT COURT FOR THE EASTERN DISTRICT OF TEXAS MARSHALL DIVISION – Hon. Roy S. Payne

Testifying expert regarding 3G and LTE technology.

Expert Declarations and Reports:

November 3, 2017: Declaration regarding Claim Construction.

March 26, 2018: Initial Expert Report Regarding Invalidity

April 23, 2018: Rebuttal Expert Report on Non-Infringement

April 27, 2018: Rebuttal Expert Report on Secondary Considerations

Videotaped Deposition: May 10, 2018

May 14, 2018: Declaration in support of Motion for Partial Summary Judgment

Jury Trial Testimony: August 22, 2018 and August 23, 2018

Attorneys: For Plaintiff: McKool Smith

For Defendant: Covington & Burling

Status: Jury award

6/2017 – 4/2018 **Client: Kramer Levin Naftalis & Frankel, LLP (representing Finjan, Inc.)**

Case: Finjan, Inc. v. Symantec, Inc.

Civil Action No. 4:14-cv-02998-HSG

Location: UNITED STATES DISTRICT COURT FOR THE NORTHERN DISTRICT OF

CALIFORNIA OAKLAND DIVISION

As a testifying expert, provided a technology tutorial in this patent case involving internet security technology.

Expert Declaration:

July 27, 2017 Tutorial expert report on security technology.

Videotaped Deposition:

August 29, 2017

Attorneys: For Plaintiff: Kramer Levin, Naftalis, & Frankel LLP

For Defendant: Quinn Emmanuel

Status: Case settled

5/2017 – 3/2018 **Client: Barnes & Thornburg, LLP (representing Ooma, Inc.)**

Case: Ooma, Inc. (Petitioner) v. Deep Green Wireless, LLC (Patent Owner)

Location: UNITED STATES PATENT AND TRADEMARK OFFICE BEFORE THE PATENT TRIAL AND APPEAL BOARD

As a testifying expert, provided a technology tutorial in this patent case involving voice and data communications over wireless networks.

Expert Declaration:

June 8, 2017 Expert report on prior art wireless network technology.

Videotaped Deposition:

February 15, 2018

Attorneys: For Petitioner: Barnes & Thornburg LLP

For Defendant: Mischcon De Reya New York, LLP

Status: Case closed

3/2017 – 6/2019 **Client: Fish & Richardson (representing Apple, Inc.) / Gibson, Dunn & Crutcher LLP (representing Compal Electronics, et. al.)**

Case: Apple Inc. v. Qualcomm Inc.

Qualcomm Inc. v. Compal Electronics, Inc., et. al.

Civil Action No. 3:17-cv-00108 / Civil Action No. 3:17-cv-01010

Location: UNITED STATES DISTRICT COURT FOR THE SOUTHERN DISTRICT OF CALIFORNIA – Hon. Gonzalo P. Curiel, Magistrate Judge: Hon. Mitchell D. Dembin

Testifying expert regarding LTE technology.

Expert Declaration:

December 11, 2017: Declaration regarding Claim Construction.

Expert Report:

June 29, 2018: Opening Expert Report regarding invalidity

August 3, 2018: Expert Report on infringement

October 2, 2018: Rebuttal Expert Report on Invalidity

Videotaped Deposition:

October 25, 2018

None

Attorneys: For Apple: Fish & Richardson

For Qualcomm: Quinn Emanuel Urquhart & Sullivan LLP / Cravath, Swaine & Moore LLP

For Compal Electronics, Inc., et. al: Gibson, Dunn & Crutcher LLP

Status: Case settled.

3/2017 – 1/2018 **Client: Kramer Levin Naftalis & Frankel, LLP (representing Finjan, Inc.)**

Case: Finjan, Inc. v. Blue Coat Systems, LLC

Civil Action No. 15-cv-03295-BLF-SVK

Location: UNITED STATES DISTRICT COURT FOR THE NORTHERN DISTRICT OF CALIFORNIA SAN JOSE DIVISION – Hon. Beth L. Freeman

As a testifying expert, provided an opening technology tutorial at trial in this patent case involving internet security technology.

Expert Declaration:

March 29, 2017 Tutorial expert report on security technology.

Videotaped Deposition:

May 2, 2017

October 31 – November 2, 2017: Jury Trial Testimony

January 8-10, 2018: Jury Trial Testimony (retrial after mistrial):

Live Testimony on Network Security Technology Tutorial

Attorneys: For Plaintiff: Kramer Levin, Naftalis, & Frankel LLP

For Defendant: Morrison & Forrester & Quinn Emmanuel

Status: Jury award

1/2017 – 7/2017 **Client: Foster Pepper LLP (representing Dali Wireless)**

Case: Dali Wireless, Inc. (Petitioner) v. CommScope Technologies, LLC (Patent Owner)

Location: UNITED STATES PATENT AND TRADEMARK OFFICE BEFORE THE PATENT TRIAL AND APPEAL BOARD

Testifying expert in this patent case involving RF transport networks.

Expert Reports:

4-26-17 Declaration ISO petition for IPR

6-30-17 Declaration ISO Opening claim construction brief

Videotaped Deposition:

July 24, 2017

Status: Case closed

1/2017 – 6/2019 **Client: Dorsey & Whitney LLP (representing Dali Wireless)**

Case: CommScope Technologies, LLC (Plaintiff/Counterclaim Defendant) v. Dali Wireless, Inc. (Defendant/Counterclaim Plaintiff)

Civil Action No.: 3:16-cv-477

Location: UNITED STATES DISTRICT COURT FOR THE NORTHERN DISTRICT OF TEXAS DALLAS DIVISION – Hon. Barbara M. G. Lynn

Testifying expert in this patent case involving RF transport networks.

Expert Reports:

8-24-18 Expert Report regarding Invalidity of CommScope patents

8-24-18 Expert Report regarding Infringement of Dali Wireless patents

11-5-18 Expert Report regarding Validity of Dali Wireless patents

11-5-18 Expert Report regarding Non-Infringement of CommScope patents

1-9-19 Declaration ISO opposition to MSJ

1-18-19 Declaration ISO partial MSJ on Non-infringement and Invalidity

5-2-19 Declaration ISO Motion for Sanctions

Videotaped Deposition:

November 20, 2018

Live Testimony at Jury Trial:

June 10-13, 2019

Attorneys: For Plaintiff: Dorsey & Whitney, LLC

For Defendant: Carlson Caspers, P.A.

Status: Jury award.

11/2016 – 4/2019 **Client: Boies, Schiller & Flexner LLP (representing Apple Inc.)**

Case: Evolved Wireless, LLC v. Apple, Inc.

Civil Action No.: 1:15-cv-00542-SLR

Location: UNITED STATES DISTRICT COURT FOR THE DISTRICT OF DELAWARE – Hon. Sue L. Robinson

Testifying expert in this patent case involving LTE wireless networks.

Expert Reports:

11-06-17 Declaration ISO Summary Judgment of Validity

10-05-17 Declaration ISO Summary Judgment of Non-Infringment

10-03-17 Supplemental Expert Report on Non-Infringement

07-24-17 Supplemental Expert Report on Secondary Considerations of Non-Obviousness

6-26-17 Expert Report on Non-Infringement

5-22-17 Expert Report on Invalidity

Videotaped Deposition:

August 11, 2017

Live Testimony at Jury Trial:

March 29 - April 1, 2019

Attorneys: For Plaintiff: Boies, Schiller & Flexner LLP

For Defendant: Robins Kaplan LLP

Status: Jury verdict of non-infringement.

7/2016 – 4/2018 **Client: Jackson Walker LLP (representing D&M Holdings, Inc., *et. al.*)**

Case: Sonos, Inc., v. D&M Holdings, d/b/a The D+M Group, D&M Holdings U.S. Inc.,

and Denon Electronics (USA), LLC

Civil Action No.: 16-0141-RGA

D&M Holdings Inc., d/b/a The D+M Group, D&M Holdings U.S. Inc. v. Sonos, Inc.

Location: UNITED STATES DISTRICT COURT FOR THE DISTRICT OF DELAWARE – Hon. Richard G. Andrews

Testifying expert in this patent case involving wireless speaker networks.

Expert Testimony:

9-11-17 Expert Report on Infringement

6-29-22 Remote Videotaped Deposition

Attorneys: For Plaintiff: Jackson Walker LLP

For Defendant: Potter Anderson & Corroon LLP

Status: Case settled

7/2016 – 1/2018 **Client: Kramer Levin Naftalis & Frankel, LLP (representing Finjan, Inc.)**

Case: Palo Alto Networks, Inc. (Petitioner) v. Finjan, Inc. (Patent Owner)

Case IPR2015-02001, Case IPR2016-00157. US Patent No. 8,225,408 B2

Case IPR2015-01974

Location: UNITED STATES PATENT AND TRADEMARK OFFICE BEFORE THE PATENT TRIAL AND APPEAL BOARD

Testifying expert in this patent case involving wireless speaker networks.

Expert Declaration:

8-9-16 Expert Declaration, Patent 7,647,633

8-9-16 Expert Declaration, Patent 8,225,408

8-30-16 Supplemental Expert Declaration, 7,647,633

Status: Case settled

5/2016 – 7/2018 **Client: (Winston & Strawn LLP representing Atlantic Broadband Group, LLC, et. al.)**

Case: ChanBond LLC v. Atlantic Broadband Group, LLC, et. al.

Civil Action No: 15-842-RGA, 15-843-RGA, 15-844-RGA, , 15-845-RGA, , 15-846-RGA, , 15-847-RGA, , 15-848-RGA, , 15-849-RGA, , 15-850-RGA, , 15-851-RGA, , 15-852-RGA, , 15-853-RGA, , 15-854-RGA

Location: UNITED STATES DISTRICT COURT FOR THE DISTRICT OF DELAWARE – Hon. Richard G. Andrews

Testifying expert regarding digital cable technology.

Expert Report:

10-24-17 Expert Report on Invalidity

Videotaped Deposition:

None

Attorneys: For Plaintiff: Bayard, P.A.

For Defendant: Winston & Strawn LLP

Status: Case settled

5/2016 – 11/2019 **Client: (Torys LLP representing Telus, Bell, and Rogers)**

Case: Wi-LAN Inc. v Telus Communications Company, Rogers Communications Canada Inc., and Bell Mobility Inc.

Court File No. T-301-16; Court File No. T-303-16; Court File No. T-304-16

Location: CANADIAN FEDERAL COURT – Hon. Mandy Aylen

Testifying expert regarding LTE technology.

Expert Report:

June 14, 2019 Expert Report regarding invalidity

Videotaped Deposition:

None

Attorneys: For Plaintiff: Torys LLP

For Defendant:

Status: Case settled

12/2015 – 4/2016 **Client: Kramer Levin Naftalis & Frankel, LLP (representing Acceleration Bay, LLC.)**

Case: Activision Blizzard, Inc., Electronic Arts Inc., Take-Two Interactive Software, Inc., 2K Sports, Inc., Rockstar Games, Inc., and Bungie, Inc., Petitioner v. Acceleration Bay, LLC, Patent Owner.

Case IPR2015-01951, Case IPR2015-01953, Case IPR2015-01964, Case IPR2015-01970, Case IPR2015-01996, Case IPR2016-00724, Case IPR2016-00747

Location: UNITED STATES PATENT AND TRADEMARK OFFICE BEFORE THE PATENT TRIAL AND APPEAL BOARD

Testifying expert in this IPR patent case involving internet data broadcasting.

Expert Declaration:

January 4, 2017 Supplemental Declaration ISO Patent Owner's Response -- Case IPR2016-00724

January 4, 2017 Supplemental Declaration ISO Patent Owner's Response -- Case IPR2016-00747

December 7, 2016 Declaration ISO Patent Owner's Response – Case IPR2016-00724; Secondary Considerations of Non-Obviousness

December 7, 2016 Declaration ISO Patent Owner's Response – Case IPR2016-00747; Secondary Considerations of Non-Obviousness

July 17, 2016 Declaration ISO Patent Owner's Response – Patent 6,714,966; Secondary Considerations of Non-Obviousness

July 17, 2016 Declaration ISO Patent Owner's Response – Patent 6,829,634; Secondary Considerations of Non-Obviousness

July 17, 2016 Declaration ISO Patent Owner's Response – Patent 6,701,344; Secondary Considerations of Non-Obviousness

Videotaped Deposition:

February 7, 2017 and February 8, 2017

Attorneys: For Plaintiff: Kramer Levin, Naftalis, & Frankel LLP

For Defendant: DLA Piper

Status: Case closed

4/2016 – Present **Client: Kramer Levin Naftalis & Frankel, LLP (representing Acceleration Bay, LLC.)**

Case: Acceleration Bay, LLC v Activision Blizzard, Inc., Electronic Arts Inc., Take-Two Interactive Software, Inc.

Civil Action No.: 14-453 (RGA), 16-454 (RGA), 16-455 (RGA)

Location: UNITED STATES DISTRICT COURT FOR THE DISTRICT OF DELAWARE – Hon. Richard G. Andrews

Testifying expert in this IPR patent case involving internet data broadcasting.

Expert Declaration:

September 24, 2017: Expert Report Regarding Technology Benefits of the

Asserted Patents

Videotaped Deposition: January 4, 2018

July 17, 2018: Reply Report Regarding Technology Benefits of the Asserted Patents

Attorneys: For Plaintiff: Kramer Levin, Naftalis, & Frankel LLP

For Defendant: DLA Piper

Status: Ongoing

12/2015 – 9/2016 **Client: Kramer Levin Naftalis & Frankel, LLP (representing Finjan, Inc.)**

Case: Finjan, Inc. v. Sophos, Inc.

Civil Action No. 3:14-cv-01197-WHO

Location: UNITED STATES DISTRICT COURT FOR THE NORTHERN DISTRICT OF CALIFORNIA SAN FRANCISCO DIVISION – Hon. William H. Orrick

As a testifying expert, provided a technology tutorial in this patent case involving internet security technology.

Expert Declaration:

December 21, 2015 Tutorial expert report on network security technology.

Videotaped Deposition:

February 22, 2016

September 5 – 9, 2016 Jury Trial:

Live Testimony at Jury Trial regarding tutorial on network security

Attorneys: For Plaintiff: Kramer Levin, Naftalis, & Frankel LLP

For Defendant: DLA Piper

Status: Jury Trial

9/2015 – 2/2016 **Client: Brinks Gilson & Lione (representing LifeWatch Services, Inc., and Card Guard Scientific Survival, Ltd.)**

Case: Card Guard Scientific Survival Ltd.

Reexam Control No. 12/706,541

Location: UNITED STATES PATENT AND TRADEMARK OFFICE

Provided testimony in this Patent Office re-examination appeal.

Expert Declaration:

November 13, 2015 Declaration under 37 C.F.R §1.132.

February 13, 2016 Declaration ISO petition for IPR.

Attorneys: For Plaintiff: Brinks Gilson & Lione

Status: Re-examination appeal decision invalidated the patent.

9/2015 – 1/2017 **Client: Kramer Levin Naftalis & Frankel, LLP (representing Finjan, Inc.)**

Case: Finjan, Inc. v. Proofpoint, Inc. and Armorize Technologies, Inc.

Civil Action No. 13:cv-03999-BLF

Location: UNITED STATES DISTRICT COURT FOR THE NORTHERN DISTRICT OF CALIFORNIA SAN JOSE DIVISION – Hon. Howard R. Lloyd, Hon. Haywood S. Gilliam, Jr.

As a testifying expert, provided an opening technology tutorial report in this patent case involving internet security technology.

Expert Declaration:

October 7, 2015 Tutorial expert report on network security technology.

Videotaped Deposition:

November 6, 2015

Attorneys: For Plaintiff: Kramer Levin, Naftalis, & Frankel LLP

For Defendant: Quinn Emanuel

Status: Case settled

8/2015 – 12/2015 **Client: Brinks Gilson LLP (representing ZTE Corporation and ZTE (USA), Inc.)**

Case: Inter-System Handover of a Mobile Terminal Operable with a First and a Second Radio Access Network

ZTE v. Vringo Infrastructure, Inc.

Location: UNITED STATES PATENT AND TRADEMARK OFFICE BEFORE THE PATENT TRIAL AND APPEAL BOARD

Testifying expert in this IPR proceeding involving 3GPP cellular technology.

Expert Declarations:

08-28-15 Declaration ISO Petition for Inter Partes Review of U. S. Patent No. 7,126,940

09-04-15 Declaration ISO Petition for Inter Partes Review of U. S. Patent No. 7,242,943

09-04-15 Declaration ISO Petition for Inter Partes Review of U. S. Patent No. 7,558,283

09-04-15 Declaration ISO Petition for Inter Partes Review of U. S. Patent No. 8,812,000

09-04-15 Declaration ISO Petition for Inter Partes Review of U. S. Patent No. 7,724,720

10-12-15 Declaration ISO Petition for Inter Partes Review of U. S. Patent No. 7,242,933

Videotaped Deposition:

None

Attorneys: For Plaintiff:

For Defendant: Brinks Gilson, LLP

Status: Case settled.

11/2014 – Present **Client: Fish & Richardson (representing Regents of the University of Minnesota)**

Case: Regents of the University of Minnesota v. AT&T Mobility, LLC, Sprint Solutions, Inc., T-Mobile USA, Inc., Cellco Partnership d/b/a Verizon Wireless

Civil Action No. 14-cv-4666

Location: UNITED STATES DISTRICT COURT FOR THE DISTRICT OF MINNESOTA – Hon. Tony N. Leung

Testifying expert on 3GPP error correction coding, precoding, and modulation.

Expert Report:

None.

Attorneys: For Plaintiff: Fish & Richardson

For Defendant:

Status: Case ongoing

10/2014 – 2/2015 **Client: Alston & Bird (representing Microsoft Corporation)**

Case: Microsoft Corporation. v. IPR Licensing, Inc.

Location: UNITED STATES PATENT AND TRADEMARK OFFICE BEFORE THE PATENT TRIAL AND APPEAL BOARD

Testifying expert in this IPR proceeding involving cellular technology.

Expert Declarations:

10-16-14 Supplemental Declaration ISO Petition for Inter Partes Review of U. S. Patent No. 8,380,244

Attorneys: For Plaintiff: Alston & Bird LLP

For Defendant:

Status: Case settled

9/2014 – 4/2015 **Client: Reed & Scardino, LLP (representing Mobile Telecommunications Technologies, LLC)**

Case: Mobile Telecommunications Technologies LLC v. Amazon.com, Inc.

Civil Action No. 2:13-CV-883-JRG-RSP

Location: UNITED STATES DISTRICT COURT FOR THE EASTERN DISTRICT OF TEXAS MARSHALL DIVISION – Hon. Roy S. Payne

Testifying expert in this patent case involving package delivery notification systems.

Expert Reports:

4-06-15 Second Supplemental Expert Report on Infringement

2-10-15 Expert Report on Infringement

2-24-15 Supplemental Expert Report on Infringement

Videotaped Deposition:

2-25-15

Declaration:

3-20-15 Declaration ISO Response to Opposition Motion

Attorneys: For Plaintiff: Reed & Scardino LLP

For Defendant: Greenberg Traurig LLP

Status: Case settled

5/2014 – 7/2015 **Client: Kramer Levin Naftalis & Frankel, LLP (representing Finjan, Inc.)**

Case: Finjan, Inc. v. Blue Coat Systems, Inc.

Civil Action No. 3:13-cv-03999-BLF

Location: UNITED STATES DISTRICT COURT FOR THE NORTHERN DISTRICT OF CALIFORNIA SAN JOSE DIVISION – Hon. Beth L. Freeman

As a testifying expert, provided an opening technology tutorial at trial in this patent case involving internet security technology.

Expert Declaration:

January 12, 2015 Tutorial expert report on security technology.

Videotaped Deposition:

March 18, 2015

Live Jury Trial Testimony: July 20, 2015.

Live Bench Trial on Laches Testimony: September 8, 2015

Attorneys: For Plaintiff: Kramer Levin, Naftalis, & Frankel LLP

For Defendant: Wilson Sonsini

Status: Jury award.

4/2014 – 12/2014 **Client: Reed & Scardino, LLP (representing Mobile Telecommunications Technologies, LLC)**

Case: Mobile Telecommunications Technologies LLC v. United Parcel Service, Inc.

Civil Action No. 1:12-cv-03222-AT

Location: UNITED STATES DISTRICT COURT FOR THE NORTHERN DISTRICT OF GEORGIA ATLANTA DIVISION – Hon. Amy Totenberg

Testifying expert in this patent case involving package delivery notification systems.

Expert Reports:

7-3-14 Opening Expert Report regarding Infringement

8-11-14 Rebuttal Expert Report regarding Infringement

Videotaped Depositions:

10-7-14

Declaration:

11-24-14 Declaration ISO Response to MSJ

Attorneys: For Plaintiff: Reed & Scardino LLP

For Defendant: Alston & Bird LLP

Status: Case settled.

12/2013 – 9/2015 **Client: Brinks Gilson & Lione LLP (representing ZTE Corp, and ZTE (USA), Inc.)**

Case: ZTE Corporation and ZTE (USA) Inc. v. InterDigital Technology Corporation

Location: UNITED STATES PATENT AND TRADEMARK OFFICE BEFORE THE PATENT TRIAL AND APPEAL BOARD

Testifying expert in this IPR proceeding involving cellular technology.

Expert Declarations:

3-21-14 Declaration in support of the Petition for Inter Partes Review of U. S. Patent No. 8,380,244

Attorneys: For Plaintiff: Brinks Gilson & Lione

For Defendant: Latham & Watkins, LLP

Status: IPR Hearing before PTAB: All disputed claims are unpatentable.

12/2013 – 4/2014 **Client: Kramer Levin Naftalis & Frankel LLP (representing Sirius XM Radio Inc.)**

Case: Catch a Wave Technologies, Inc. v. Sirius XM Radio Inc.

Case No. 3:12-cv-05791-WHA

Location: UNITED STATES DISTRICT COURT FOR THE NORTHERN DISTRICT OF CALIFORNIA SAN FRANCISCO DIVISION – Hon. William Alsup

Testifying expert in this patent case involving satellite radio systems.

Expert Reports:

2-14-2014 Expert Report regarding non-infringement

Attorneys: For Plaintiff: Freitas Tseng & Kaufman LLP

For Defendant: Kramer Levin LLP

Status: Case settled

2/2013 – 7/2016 **Client: Reed & Scardino, LLP (representing Mobile Telecommunications Technologies, LLC)**

Case: Mobile Telecommunications Technologies LLC v. BlackBerry Corporation.

Civil Action No. 3:12-cv-1652-M

Location: UNITED STATES DISTRICT COURT FOR THE NORTHERN DISTRICT OF TEXAS DALLAS DIVISION – Hon. Barbara M. G. Lynn

Testifying expert in this patent case involving package delivery notification systems.

Expert Reports:

9-3-15 Expert Report on Infringement

Videotaped Depositions:

November 18, 2015

Live Testimony at Jury Trial: July 13, 2016.

Attorneys: For Plaintiff: Baker Botts, LLP

For Defendant: Reed & Scardino LLP

Status: Jury verdict of non-infringement.

9/2013 – 1/2014 **Client: Reed & Scardino, LLP (representing Mobile Telecommunications Technologies, LLC)**

Case: Mobile Telecommunications Technologies, LLC v Clearwire Corporation

Civil Action No. 2:12-CV-308

Location: UNITED STATES DISTRICT COURT FOR THE EASTERN DISTRICT OF TEXAS MARSHALL DIVISION – Hon. Roy S. Payne

Testifying expert in this patent case involving wireless networking signals.

Expert Reports:

11-11-13 Rebuttal report regarding validity

Videotaped Depositions:

12-5-13

Declarations:

1-23-14 Declaration before the Patent Trial and Appeal Board in Case IPR2013-00306

Attorneys: For Plaintiff: Reed & Scardino LLP

For Defendant: Shook, Hardy & Bacon, LLP

Status: Case settled

10/2013 – 5/2015 **Client: Foley & Lardner, LLP (representing Motorola Mobility, LLC)**

Case: University of Florida Research Foundation Inc., and Rapid Mobile Technologies, Inc. v Motorola Mobility, LLC.

Case No. 13-cv-61120-KMM-EGT

Location: UNITED STATES DISTRICT COURT FOR THE SOUTHERN DISTRICT OF FLORIDA FORT LAUDERDALE DIVISION – Hon. K. Michael Moore, Magistrate Judge: Hon. Edwin G. Torres

Testifying expert in this patent case involving mobile device testing systems.

Expert Reports:

None.

Declarations:

11-21-13 Declaration ISO Motorola's Responsive Claim Construction Brief

Attorneys: For Plaintiff: Meltzer & Meksraitis

For Defendant: Foley & Lardner LLP

Status: Case settled

7/2013 – 6/2015 **Client: WilmerHale (representing Broadcom)**

Case: Inter Partes Review of US Patent 6,424,625; 6,772,215; and 6,466,568 owned by Ericsson

Docket No. 0111168-0240

Location: UNITED STATES PATENT AND TRADEMARK OFFICE BEFORE THE PATENT TRIAL AND APPEAL BOARD

Testifying expert in this Inter Partes Review regarding ARQ mechanisms.

Expert Declarations:

9-19-13 Declaration regarding US Patent 6,772,215

9-19-13 Declaration regarding US Patent 6,466,568

9-29-13 Declaration regarding US Patent 6,424,625

Videotaped Deposition:

5-29-14, and 5-30-14

Attorneys: For Plaintiff: Meltzer & Mathis

For Defendant: Wilmer Cutler Pickering Hale and Dorr LLP

Status: IPR Petition granted. All claims invalidated

4/2013 – 4/2015 **Client: Kilpatrick Townsend & Stockton LLP (representing Google Inc. and Motorola Mobility LLC)**

Case: Fujifilm Corporation v. Motorola Mobility LLC

Case No. 3:12-cv-03587 WHO

Location: UNITED STATES DISTRICT COURT FOR THE NORTHERN DISTRICT OF CALIFORNIA SAN FRANCISCO DIVISION – Hon. Richard Seeborg

Testifying expert in this patent case involving smartphone technology.

Expert Declarations:

4-23-14 Declaration ISO Motion for Protective Order

12-9-14 Declaration ISO MSJ

Expert Reports:

10-3-14 Opening Expert Report Regarding Invalidity

10-31-14 Rebuttal Expert Report on non-infringement

10-31-14 Appendix A to Rebuttal Report of Dr. Alan Bovik

Videotaped Deposition:

11-19-14, and 11-20-14

Trial Testimony:

April 28, 2015 Non-infringement and invalidity of ’970 Patent

Attorneys: For Plaintiff: Morgan, Lewis & Bockius LLP

For Defendant: Kilpatrick Townsend & Stockton LLP

Status: Jury verdict: ’970 Patent claims not infringed and invalid.

2/2013 – 10/2013 **Client: Seyfarth Shaw LLP (representing Motorola Mobility LLC)**

Case: University of Florida Research Foundation, Inc. and Rapid Mobile Technologies, Inc. v. Motorola Mobility LLC

Civil Action No. 13-cv-61120-KMM-EGT

Location: UNITED STATES DISTRICT COURT FOR THE SOUTHERN DISTRICT OF FLORIDA – Hon. K. Michael Moore, Magistrate Judge: Hon. Edwin G. Torres

Testifying expert in this employment law case involving mobile device testing systems.

Expert Reports:

3-1-13 Expert Report regarding Non-Infringement

4-1-13 Declaration in Opposition to Plaintiff's MSJ

Attorneys: For Plaintiff: Meltzer & Mathis

For Defendant: Seyfarth Shaw LLP

Status: Case settled

5/2012 – 4/2013 **Client: Paul Hastings LLP (representing Apple, Inc.)**

Case: SmartPhone Technologies, LLC v Research in Motion Corporation, et. al.

Case No. 6:10-cv-00074

Location: UNITED STATES DISTRICT COURT FOR THE EASTERN DISTRICT OF TEXAS TYLER DIVISION – Hon. John D. Love

Testifying expert in this patent case involving 3GPP technology.

Expert Reports:

12-31-12 Appendix A to Rebuttal Expert Report of Dr. David Wilson

3-13-13 Appendix A to Supplemental Expert Report of Dr. David Wilson

Attorneys: For Plaintiff: Mintz Levin Cohn Ferris Glovsky and Popeo PC

For Defendant: Paul Hastings LLP

Status: Case settled

8/2012 – 9/2013 **Client: Reed & Scardino, LLP (representing EON Corp. IP Holdings, LLC)**

Case: EON Corp. IP Holdings, LLC v. SKYGUARD, LLC et. al.

Case No. 6:11-cv-00015-LED

Location: UNITED STATES DISTRICT COURT FOR THE EASTERN DISTRICT OF

TEXAS TYLER DIVISION – Hon. John D. Love

Testifying expert in this patent case involving RF technology for WiFi networking.

Expert Reports:

2-15-13 Expert Report regarding Infringement

Videotaped Deposition:

4-09-13

Attorneys: For Plaintiff: Reed & Scardino, LLP

For Defendant: K&L GATES LLP

Status: Case settled

5/2012 – 6/2014 **Client: Reed & Scardino LLP (representing Eon Corp. IP Holdings)**

Case: Eon Corp. IP Holdings, LLC v. Landis+Gyr, Inc., et. al.

Case No. 6:09-cv-00317-LED-JDL

Location: UNITED STATES DISTRICT COURT EASTERN DISTRICT OF TEXAS TYLER DIVISION – Hon. John D. Love

Testifying expert in this patent case involving two-way wireless networks, before Judge Love.

Expert Report:

7-8-13 Expert Report regarding Infringement by Silver Spring Networks, Inc.

7-8-13 Expert Report regarding Infringement by Itron, Inc.

Videotaped Deposition: September 12, 2013

Live Testimony at Jury Trial: June 2, 2014 – June 6-2014

Attorneys: For Plaintiff: Reed & Scardino LLP

For Defendant: Dentons, LLP

Status: Jury award. All patents found valid and infringed.

3/2012 – 3/2014 **Client: Perkins Coie (representing Intel Corporation)**

Case: Stragent LLC, et. al. v. Intel Corp.,

Case No. 6:11-cv-421-LED (E.D. Tex.)

Location: UNITED STATES DISTRICT COURT FOR THE EASTERN DISTRICT OF TEXAS TYLER DIVISION – Hon. Timothy Dyk, Hon. John D. Love

Testifying expert in this patent case involving the use of error detection technology in computer networking, before Judge Dyk.

Expert Reports:

08-23-13 Expert Report regarding Invalidity

09-23-13 Expert Report regarding Non-Infringement

Videotaped Deposition:

10-08-13, and 10-09-13

Jury trial testimony:

3-13-2014 Live trial testimony on non-infringement and invalidity before Judge Timothy Dyk

Attorneys: For Plaintiff: Nelson, Bumgardner & Casto

For Defendant: Perkins Coie

Status: Jury verdict for non-infringement and invalidity

2/2012 – 09/2015 **Client: Dewey & LeBoeuf LLP (representing Harris Corporation)**

Case: Harris Corporation v. Ruckus Wireless, Inc.

Case No. 6:11-cv-00618-CEM-CRS

Location: UNITED STATES DISTRICT COURT FOR THE MIDDLE DISTRICT OF FLORIDA ORLANDO DIVISION – Hon. Charlene Edwards Honeywell

Testifying expert in this patent case involving RF technology for WiFi networking.

Expert Reports:

3-5-12 Expert Report regarding Infringement

3-6-12 Supplemental Expert Report regarding Infringement

4-6-12 Expert Report regarding Validity

Declarations:

5-30-12 Declaration ISO Claim Construction

6-18-12 Declaration ISO Markman Motion

1-23-15 Declaration ISO Responsive Markman Brief

3-6-15 Supplemental Expert Report regarding Infringement

4-3-15 Rebuttal Expert Report regarding Validity

Videotaped Deposition:

4-30-12

Attorneys: For Plaintiff: Dewey & LeBeouf LLP

For Defendant: Lewis and Roca LLP

Status: Case settled

2/2012 – 2/2013 **Client: Common-Interest-Group (representing Nokia, Huawei, ZTE)**

Case: InterDigital Communications LLC, et. al. v. Huawei Tech Co., LTD., et. al.

Certain Wireless Devices With 3G Capabilities and Components Thereof

U.S. Int'l Trade Commission Inv. No. 337-TA-800

Location: UNITED STATES INTERNATIONAL TRADE COMMISSION – Administrative Law Judge Hon. David P. Shaw and Administrative Law Judge Hon. Theodore R. Essex

Testifying expert in this patent case involving 3G wireless, WiFi, and WCDMA technology.

Expert Reports:

11-30-12 Expert Report regarding Non-infringement

7-31-12 Expert Report regarding Invalidity

11-19-10 Rebuttal Expert Report regarding Validity

12-6-10 Supplemental Expert Report regarding Infringement

Videotaped Deposition:

12-14-12, 12-15-12

ITC Trial testimony:

2-6 through 2-15/13 Non-infringement and Invalidity witness statements, live testimony

Attorneys: For Plaintiff: Latham & Watkins, LLP

For Defendant: Alston & Bird, Covington & Burling, Brinks Hofer

Status: ITC hearing verdict: All patents not infringed and invalid

9/2010 – 4/2011 **Client: Reed & Scardino LLP (representing Eon Corp. IP Holdings)**

Case: Eon Corp. IP Holdings, LLC v. Sensus USA, Inc., et. al.

Case No. 6:09-cv-00116-LED-JDL

Location: UNITED STATES DISTRICT COURT EASTERN DISTRICT OF TEXAS

TYLER DIVISION – Hon. John D. Love

Testifying expert in this patent case involving two-way wireless networks

Expert Report:

10-22-10 Expert Report regarding Infringement (Sensus USA, Inc)

11-7-10 Expert Report regarding Infringement (Bell Industries)

11-19-10 Rebuttal Expert Report regarding Validity

12-6-10 Supplemental Expert Report regarding Infringement

Declaration:

12-28-10, 1-18-11

Videotaped Deposition:

12-8-10, 2-3-11

Attorneys: For Plaintiff: Reed & Scardino LLP

For Defendant: Jones Day

Status: Case settled

10/2009 – 2/2010 **Client: White & Case LLP (representing Marvell)**

Case: Marvell Semiconductor, Inc., et. al. v. Commonwealth Scientific Industrial Research Organisation

Case No. 6:07-CV-204 (LED)

Location: UNITED STATES DISTRICT COURT EASTERN DISTRICT OF TEXAS TYLER DIVISION – Hon. Leonard Davis

Testifying expert in this patent case involving wireless LAN protocols.

Expert Report:

11-24-09 Rebuttal Expert Report

Videotaped Deposition:

01-07-10

Attorneys: For Plaintiff: White & Case LLP

For Defendant: Townsend and Townsend and Crew LLP

Status: Case settled

9/2009 – 2/2010 **Client: Perkins Coie Brown & Bain PA (representing Intel)**

Case: Saxon Innovations, LLC v. Apple, Inc., et. al.

Case No. 6:08-cv-00265-LED

Location: UNITED STATES DISTRICT COURT FOR THE EASTERN DISTRICT OF TEXAS TYLER DIVISION – Hon. John D. Love

Testifying expert in this patent case involving wireless technology.

Declarations:

12-04-09 Declaration Regarding Claim Construction

Videotaped Deposition:

01-19-10

Attorneys: For Plaintiff: Susman Godfrey LLP

For Defendant: Perkins Coie Brown & Bain LLP

Status: Case settled

8/2008 – 10/2009 **Client: Reed & Scardino LLP (representing Eon Corp. IP Holdings)**

Case: Eon Corp. IP Holdings, LLC v. Verizon Clinton Center Drive Corp., et. al.

Case No. 6:08-cv-00385

Location: UNITED STATES DISTRICT COURT FOR THE EASTERN DISTRICT OF TEXAS TYLER DIVISION – Hon. John D. Love

Testifying expert in this patent case involving two-way wireless networks

Expert Report:

06-22-10 Expert Report
08-16-10 Supplemental Expert Report

Videotaped Depositions:
08-18-10, 08-26-10

Attorneys: For Plaintiff: Reed & Scardino LLP

For Defendant: Simpson Thacher & Bartlett LLP

Status: Case settled

4/2008 – 3/2009 **Client: McDermott, Will & Emery LLP (representing GE Licensing)**

Case: CIF Licensing, LLC d/b/a GE Licensing v. Agere Systems, Inc.

Case No. 07-170 (JJF)

Location: UNITED STATES DISTRICT COURT FOR THE DISTRICT OF DELAWARE

– Hon. Joseph. J. Farnan, Jr.

Testifying expert in this patent case involving modem technology.

Expert Report:

09-05-08 Rebuttal Expert Report

Non-videotaped Depositions:
9-24-08, 9-26-08

Jury trial testimony:

2-04-09

Attorneys: For Plaintiff: McDermott, Will & Emery LLP

For Defendant: Townsend and Townsend and Crew LLP

Status: Jury award. 2 patents infringed and valid, remaining 2 patents non-infringed

2/2008 – 5/2010, 2/2011 – 4/2011 **Client: Simpson Thacher & Bartlett LLP (representing Cisco Systems, Inc.)**

Case: Commil USA, LLC v. Cisco Systems, Inc., et. al.

Case No. 2:07-CV-341-DF-CE

Location: UNITED STATES DISTRICT COURT EASTERN DISTRICT OF TEXAS MARSHALL DIVISION – Hon. Charles Everingham IV

Testifying expert on invalidity regarding short range communication protocols.

Opening Expert Report

12-23-09

Videotaped Depositions:

02-09-10

Attorneys: For Plaintiff: Sayles Werbner

For Defendant: Simpson Thacher & Bartlett LLP

Status: Jury award for original trial and retrial: patents found valid and infringed.

6/2007 – 4/2009 **Client: Common Interest Group of Co-Defendants**
11/2010 – 4/2012 **Client: Common Interest Group of Co-Defendants**

Case: Commonwealth Scientific and Industrial Research Organisation v. Toshiba America Information Systems, Inc., et. al.

Case No. 6:06-cv-00550-LED

Case No. 6:09-CV-0399 (LED)

Location: UNITED STATES DISTRICT COURT EASTERN DISTRICT OF TEXAS TYLER DIVISION – Hon. Leonard Davis

Testifying expert in this patent case involving wireless LAN technology.

Declarations:

06-05-08 Regarding claim construction

12-17-08 Supporting opposition to summary judgment

04-05-09 Supporting motion for reconsideration

02-24-12 Supporting opposition to summary judgment

Expert Reports:

10-08-08 Rebuttal Expert Reports- Re: TI Chips, Re: Marvell Chips, Re: Airgo Chips, Re: Broadcom Chips, Re: Conexant Chips, Re: Ralink Chips, Re: Atheros Chips

01-27-12 Rebuttal Expert Reports- Re: TI Chips, Re: Broadcom Chips, Re: Ralink Chips, Re: Atheros Chips

Videotaped Depositions:
11-1-08, 11-2-08, 02-14-12

Attorneys: For Plaintiff: Townsend & Townsend LLP

For Defendant: Keker & Van Nest, LLP

Status: Jury trial: patents found valid and infringed.

10/2006 – 8/2009 **Client: Keker & Van Nest (representing Comcast Corporation)**

Case: Rembrandt Technologies, Inc. v. Comcast Corporation

Case No. 2-05-CV-000443 (TJW)

Location: UNITED STATES DISTRICT COURT EASTERN DISTRICT OF TEXAS MARSHALL DIVISION – Hon. T. John Ward

Testifying expert in this patent case involving physical layer and data link layer communication protocols for cable networks.

Declaration:

01-10-07 Support of Claim Construction Brief

Videotaped Deposition:

12-22-06 Regarding claim construction opinions

Attorneys: For Plaintiff: McKool Smith

For Defendant: Keker & Van Nest

Status: Case settled

3/2007 – 5/2007 **Client: Niro, Scavone, Haller and Niro (representing MLR, LLC)**

Case: MLR, LLC v. Kyocera Wireless Corporation and Novatel Wireless, Inc.

Case No. 05-CV-0935 B (AJB)

Location: UNITED STATES DISTRICT COURT SOUTHERN DISTRICT OF CALIFORNIA

Testifying expert in this patent case involving cellular phone technology.

Expert Report:

04-20-07 Expert Report regarding infringement

Attorneys: For Plaintiff: Niro, Scavone, Haller, and Niro

For Defendant: Hogan & Hartson, LLP

Status: Case settled

6/2006 – 10/2006 **Client: Thompson & Knight (representing Ericsson, Inc.)**

Case: Fenner Investments, Ltd., v. Juniper Networks, Inc. et. al.
Case No. 2:05–CV–05 JDL

Location: UNITED STATES DISTRICT COURT EASTERN DISTRICT OF TEXAS MARSHALL DIVISION

Testifying expert in this patent case involving wireless communications services.

Expert report regarding infringement and invalidity

5-23-06 Rebuttal expert report regarding infringement and invalidity

Attorneys: For Plaintiff: Fulbright & Jaworski

For Defendant Ericsson: Thompson & Knight

Status: Case settled

12/2003 – 5/2006 **Client: Howrey LLP/ Winston & Strawn LLP (representing McKesson Information Solutions, Inc.)**

Case: McKesson Information Solutions, Inc. vs. Bridge Medical, Inc.
Case No. CIV S-02-2669 FCD KJM

Location: UNITED STATES DISTRICT COURT EASTERN DISTRICT OF CALIFORNIA – Hon. Peter A. Nowinski

Testifying expert in this patent case involving a patient on a patient identification and verification system that incorporates wireless technology.

Inequitable Conduct Trial live testimony:
5-04-06

Markman Hearing live testimony:
6-29/30-05

Videotaped Depositions:
2-14-04, 6-3-05

Declarations:
12-1-03 Dec. in support of MISI's Opening/Opposition re Claim Construction
12-24-04 Dec. in support of MISI's Motion for Preliminary Injunction
3-1-04 Dec. in support of Claim Construction
6-29-04 Dec. re meaning of "Communication"
7/15/05 Dec. in support of MISI's Opposition to Bridge's Motion for Summary Judgment

Attorneys: For Defendant: Morrison & Foerster

For Plaintiff: Howrey Simon, Winston & Strawn, Morgan Lewis

Status: Bench trial on inequitable conduct: Verdict found inequitable conduct.

07/2003–02/2006 **Client: Heller Ehrman LLP (representing Texas Instruments, Inc.)**

Case: Texas Instruments, Inc. and Stanford University vs. GlobespanVirata, Inc.

Provided discovery of evidence used at trial, concerning the structure and operation of Globespan's ADSL products, and supported litigators in depositions of Globespan engineers.

Attorneys: For Plaintiff: Heller Ehrman

For Defendant: Covington & Burling, LLP

Status: Jury award.

Patents

Patent Number	Date Issued	Title

10,332,121	June 25, 2019	Light-based Data Entry for Personal Inventory and Product Support System
9,978,037	May 22, 2018	Personal inventory and product support system
8,995,996	March 31, 2015	Methods and apparatus for performance optimization of heterogeneous wireless system communities
8,935,580	January 13, 2015	Multimedia-aware quality-of-service and error correction provisioning
8,468,426	June 18, 2013	Multimedia-aware quality-of-service and error correction provisioning
8,189,538	May 29, 2012	Reconfiguration of a communication system
8,144,640	March 27, 2012	Location tracking in a wireless communication system using power levels of packets received by repeaters
8,064,380	November 22, 2011	Reconfiguration of a communication system
8,027,637	September 27, 2011	Single frequency wireless communication system
7,957,741	June 7, 2011	Token-based receiver diversity
7,876,704	January 25, 2011	Tunneling protocols for wireless communications
7,689,210	March 30, 2010	Plug-n-playable wireless communication system
7,672,274	March 2, 2010	Mobility support via routing
7,668,542	February 23, 2010	Token-based receiver diversity
7,515,557	Apr 7, 2009	Reconfiguration of a communication system
7,236,470	Jun 26, 2007	Tracking multiple interface connections by mobile stations
7,149,196	Dec 12, 2006	Location tracking in a wireless communication system using power levels of packets received by repeater
6,965,769	Nov 15, 2005	Testing Center
6,862,448	Mar 1, 2005	Token-based receiver diversity
6,788,658	Sep 7, 2004	Wireless communication system architecture having split MAC layer
6,760,318	Jul 6, 2004	Receiver diversity in a communication system
6,557,134	Apr 29, 2003	ARQ method for wireless communication
6,259,911	Jul 10, 2001	Network operations center hardware and software design

Education

Year	College/University	Degree
1993	Stanford University	PhD, Electrical Engineering Thesis: "Trellis Coding for Multi-Level, Partial-Response Continuous Phase Modulation with Precoding"
1988	Stanford University	MS, Electrical Engineering
1985	Rensselaer Polytechnic Institute	BS, Computer and Systems Engineering

Publications

Goldhamer, M., Grandblaise, D., Bims, H., Feng, S., Piggin, P., Sydor, J., and Wu, X. "Coexistence between 802.16 Systems Operating in Shared Bands", *Radio Resource Management in WiMAX,* John Wiley & Sons, 2009.

Bims, Harry. "Surveying the Wireless LANdscape. Or Why Large Wi-Fi Networks Require Good Planning." Xchange. [Online] Available http://www.xchangemag.com/articles/391supsys1.html, September 1, 2003.

Bims, Harry. "Building Voice-Ready Wireless LANs" Wireless Week. [Online] Available http://www.wirelessweek.com/article/CA319429.html?spacedesc=Departments, September 1, 2003.

Bims, Harry. "Enabling Voice over WLANs". White Paper. [Online] Available. **http://airflownetworks.com/solutions/pdf/vowlan_wp.pdf.** September 2003.

Bims, Harry. "Securing Enterprise WLANs". White Paper. [Online] Available. http://web.archive.org/web/20040303212529/airflownetworks.com/solutions/pdf/securing_wlans_wp.pdf. August 2003.

Bims, H. and Cioffi. J. "Trellis Coding for Full-Response CPM", *Third Generation Wireless Information Networks*, Kluwer Academic Publishers, 1992.

Bims, H. and Cioffi. J. "Trellis Coding for Full-Response CPM", *WINLAB WORKSHOP*, East Brunswick, NJ. October 18-19, 1990.

Bims, H. and Cioffi, J. "Trellis Coding for Partial-Response CPM", *1991 International Symposium on Information Theory*, Budapest, Hungary. June 24-28, 1991.

Bims, H. and Cioffi, J. "Trellis Coding with M-ary MSK Constraints", *GLOBECOM '89*, Dallas TX. Nov. 1989.

Professional Associations and Achievements

- Jan 2009 – Present Vice-Chair and Board of Directors, Menlo Park Chamber of Commerce
- Nov 2007 – Sep 2010 Vice-Chair and Secretary, IEEE 802.16h License Exempt Group
- Feb 2002 – Jan 2011 Member, City of Menlo Park Planning Commission (2006 Chairperson, 2005 Vice-Chairperson)
- Feb 2012 – Present Senior Member, IEEE
- Jan 2000 – Dec 2000 Chair, IEEE Engineering Management Society – Silicon Valley Chapter
- Jun 1985 - Jun 1991 AT&T Bell Laboratories Cooperative Research Fellow