UNITED STATES PATENT AND TRADEMARK OFFICE

BEFORE THE PATENT TRIAL AND APPEAL BOARD

SAMSUNG ELECTRONICS CO., LTD. AND
SAMSUNG ELECTRONICS AMERICA, INC.,

Petitioners,

v.

APEX BEAM TECHNOLOGIES LLC,

Patent Owner.

Patent No. 10,568,113
Filing Date: August 9. 2018
Issue Date: February 18, 2020

Inventor: Xiaobo Zhang
Title: METHOD AND DEVICE IN UE AND BASE STATION
USED FOR WIRELESS COMMUNICATION

PATENT OWNER'S RESPONSE

Case No. IPR2023-00602

TABLE OF CONTENTS

Page(s)

I. INTRODUCTION 1

II. THE '113 PATENT 3

III. THE ALLEGED PRIOR ART 4

A. U.S. Patent Application Publication No. 2018/0367374 ("Liu") 4

B. U.S. Patent Application Publication No. 2015/0141026 ("Jover") 10

IV. CLAIM CONSTRUCTION 11

A. "triggering the transmission" 11

B. "first time window"; "second time window"; and "third time window" 13

1. A time interval during which an activity may take place. Also, a time interval during which an activity must take place. 14

V. LEVEL OF ORDINARY SKILL IN THE ART 17

VI. REQUIREMENTS UNDER 35 U.S.C. § 103 18

VII. PETITIONER HAS NOT PROVED INVALIDITY OF THE CHALLENGED CLAIMS BY A PREPONDERANCE OF THE EVIDENCE 20

A. Liu Alone or in Combination with Jover Does Not Render Claims 1-5 Obvious 20

1. Liu in Combination with Jover Does Not Render Obvious "*transmitting a second radio signal on a second channel*," as Required by Claim 1, or "*The method according to claim 1, wherein the first channel is a first type of physical layer channel, the second channel is a second type of physical layer channel, and the first type*

of physical layer channel and the second type of physical layer channel are two different types of physical layer channels," as Required by Claim 3 20

2. Liu in Combination with Jover Does Not Render Obvious "*wherein a measurement for the target radio signal obtains a target measurement value, the target measurement value, when higher than a target threshold is used for triggering the transmission of the first radio signal and the second radio signal*," as Required by Claim 1 26

3. Liu in Combination with Jover Does Not Render Obvious "*a time domain resource occupied by the first radio signal is used for determining a second time window,*" "*a time domain resource occupied by the second radio signal is within the second time window, and the second time window is within the first time window,"* and *"the second time window and the third time window have overlapped time domain resource(s)*," as Required by Claim 1 28

B. Liu in Combination with Jover Does Not Render Claims 2-20 Obvious 29

C. There is No Motivation to Combine Liu with Jover 30

VIII. CONCLUSION 32

TABLE OF AUTHORITIES

Page(s)

Cases

Apple Inc. v. Firstface Co.,
No. 2021-1001, 2021 WL 4156323 (Fed. Cir. Sept. 13, 2021).....12

Apple, Inc. v. Contentguard Holdings, Inc.,
IPR2015-00355, Paper 9 (P.T.A.B. June 26, 2015) 18

Broadcom Corp. v. Emulex Corp.,
732 F.3d 1325 (Fed. Cir. 2013) 19

CAE Screenplates Inc. v. Heinrich Fiedler GmbH & Co. KG,
224 F.3d 1308 (Fed. Cir. 2000) 12

Graham v. John Deere Co. of Kansas City,
383 U.S. 1 (1966).....18

Innogenetics, N.V. v. Abbott Lab'ys.,
512 F.3d 1363 (Fed. Cir. 2008) 19

Intelligent Bio-Sys., Inc. v. Illumina Cambridge Ltd.,
821 F.3d 1359 (Fed. Cir. 2016) 19

Los Angeles Biomedical Rsch. Inst. At Harbor-UCLA Med. Ctr. V. Eli Lilly Co.,
849 F.3d 1049 (Fed. Cir. 2017) 19

Neville v. Found. Constructors, Inc.,
972 F.3d 1350 (Fed. Cir. 2020) 12

Pers. Web Techs., LLC v. Apple, Inc.,
848 F.3d 987 (Fed. Cir. 2017) 19

Realtime Data, LLC v. Iancu,
912 F.3d 1368 (Fed. Cir. 2019) 13

Statutes

35 U.S.C. § 103 18

35 U.S.C. § 112(f) 11

Other Authorities

37 C.F.R. § 42.104 11

37 C.F.R. § 42.104(b)(3) 11

EXHIBIT LIST

Exhibit No.	Description of Document
2001	Defendants' Patent L.R. 3-3 Invalidity Contentions and Subject Matter Ineligibility Contentions, *Apex Beam Technologies LLC v. Samsung Electronics Co., Ltd. et al.,* Case No. 2:22-cv-00188-JRG, served March 2, 2023
2002	Docket Control Order, Dkt. 37, *Apex Beam Technologies LLC v. Samsung Electronics Co., Ltd., et al.*, Case No. 2:22-cv-00188-JRG (E.D. Tex. February 6, 2023)
2003	Order Denying Motion to Stay Pending *Inter Partes* Review, Dkt. 55, *Apex Beam Technologies LLC v. Samsung Electronics Co., Ltd, et al.*, Case No. 2:22-cv-00188-JRG (E.D. Tex. June 14, 2023)
2004	Redline Comparison of the Declaration of Harry R. Bims, Jr., Ph.D. (Ex. 1003) to the Petition
2005	Declaration of Miguel Gomez ("Gomez Decl."), dated December 26, 2023 and Exhibit A, Curriculum Vitae of Miguel Gomez.
2006	Deposition of Harry Bims, taken in *Samsung Elecs. Co., v. Apex Beam Techs. LLC*, IPR2023-00601 and IPR2023-00602, on December 13, 2023. ("Bims Depo.")

I. INTRODUCTION

The Board should issue a Final Written Decision finding Claims 1-20 (the "Challenged Claims") of the U.S. Patent No. 10,568,113 (Ex. 1001, the "'113 Patent") not unpatentable because Samsung Electronics Co., Ltd. and Samsung Electronics America, Inc. (collectively, "Petitioner" or "Samsung") fail to show that the Challenged Claims are obvious (1) over U.S. Patent Publication No. 2018/0367374 to Liu *et al.*, published December 20, 2018 (Exhibit 1007, "Liu"); or (2) over Liu in view of U.S. Patent Application Publication No. 2015/0141026 to Jover, published May 21, 2015 (Exhibit 1005, "Jover").

Petitioner does not assert any grounds of anticipation, but asserts one ground of obviousness. The combination of Liu and Jover does not teach key claim elements of the '113 Patent's Challenged Claims, such as transmitting a second radio signal on a second channel," "the method according to claim 1, wherein the first channel is a first type of physical layer channel, the second channel is a second type of physical layer channel, and the first type of physical layer channel and the second type of physical layer channel are two different types of physical layer channels," "wherein a measurement for the target radio signal obtains a target measurement value, the target measurement value, when higher than a target threshold is used for triggering the transmission of the first radio signal and the second radio signal," "a time domain resource occupied by the first radio signal is used for determining a second time

window," and "a time domain resource occupied by the second radio signal is within the second time window, and the second time window is within the first time window," "the second time window and the third time window have overlapped time domain resource(s)." Notably, the combination of Liu and Jover does not render obvious any of the Challenged Claims because a person of ordinary skill would not have been motivated to combine Liu with Jover since Jover's disclosure is inapposite to the claims of the '113 Patent.

Petitioner also (i) incorrectly construes "triggering the transmission" to merely mean "transmission" instead of "causing a transmission" and (ii) incorrectly construes "second time window" as the period of time that a first radio signal waits for a responsive signal rather than the period of time from the first radio signal in which to transmit the second radio signal.

Patent Owner respectfully submits that Petitioner's deficient arguments, Patent Owner's arguments presented herein, and the additional evidence submitted herewith, such as the Declaration of Miguel Gomez, and the deposition testimony of Dr. Harry Bims, demonstrate that the Challenged Claims are patentable. Accordingly, the Board should issue a Final Written Decision finding all the Challenged Claims of the '113 Patent not unpatentable.

II. THE ’113 PATENT

The ’113 Patent discloses and claims “transmission schemes of radio signals in wireless communication systems and, in particular, to a method and a device for a User Equipment (UE) to autonomously determine transmission of information.”’113 Patent, at 1:17-21.

The ’113 Patent describes why such schemes are necessary in view of the “low utilization of the time-frequency resource configured for transmitting the beam recovery request,” as in the prior art:

> The inventor finds through researches that: if a UE, after using one channel to transmit a beam recovery request, cannot transmit the beam recovery request again during the time window of waiting a response, then a time-frequency resource configured within the time window of waiting the response to transmit a beam recovery request cannot be used by the UE to transmit a beam recovery request, which consequently results in a low utilization of the time-frequency resource configured for transmitting the beam recovery request.
>
> In view of the above problems, the present disclosure provides a solution.

Id. at 1:43-54.

The application that issued as the ’113 Patent was filed on August 9, 2018, and claimed priority to a foreign application CN 201710686330.4 filed on August 11, 2017. Ex. 1003, 3, 68.

During prosecution of the ’113 Patent, the Examiner rejected the claims, finding that the prior art disclosed the methods and systems recited in original

independent Claims 1, 6, 11, and 16. *Id.*, 122-142. In response, applicant amended Claims 1, 6, 11, and 16 by adding various amendments, including that the target radio signal "obtains a target measurement value" that triggers transmission of the first and second radio signal "when higher than a target threshold" and clarifying various time windows in relation to the transmitted first and second radio signals. *Id.*, 153-161. The Examiner subsequently allowed the claims. *Id.*, 172-182. Specifically, the Examiner stated:

> The instant invention is related to a UE receives a target radio signal, transmits a first radio signal on a first channel, transmits a second radio signal on a second channel, and monitors a third radio signal in a first time window. A measurement for the target radio signal is used for triggering the transmission of the first radio signal and the second radio signal; a time resource occupied by the first radio signal is used for determining the start time of the first time window; and a time resource occupied by the second radio signal is used for determining the end time of the first time window. The application of the present disclosure can make full use of the allocated aerial resources, and improve the utilization of the aerial resources configured to transmit a report request that is determined autonomously by the UE.

Id., at 177.

III. THE ALLEGED PRIOR ART

A. U.S. Patent Application Publication No. 2018/0367374 ("Liu")

Liu is directed to "technology for technology for beam failure recovery in user equipment. The user equipment sends a beam failure recovery request to the base

station upon detection of a beam failure between the base station and the user equipment, and monitors one or more candidate beams in which to receive the beam failure recovery request response from the base station, based on an association between a beam failure recovery request response and a beam failure recovery request." Ex. 1007 at Abstract. Liu discloses the problem it tries to solve, as well as an exemplary embodiment of its proposed solution, as follows:

> User equipment and base stations establish a connections using downlink and uplink beam pairs. Often times, for example as a result of blockage or user equipment rotation or displacement, the connection between the user equipment and the base station is disrupted, resulting in a beam failure. To overcome such failure, a beam failure recovery mechanism may help to improve high frequency link performance.
>
> In one embodiment, in order to recover the connection, a beam failure recovery request (BFRR) is sent by the user equipment in an attempt to reestablish the connection with the base station when a beam failure occurs. Using spatially quasi co-located information between a downlink beam pair and an uplink beam pair provided by the base station, the user equipment may monitor candidate beams in which to receive a BFRR response from the base station, where the BFRR response is associated with the BFRR and the downlink beam(s) is in a time slot with a time offset to the BFRR.

Id., at [0053]-[0054].

The disclosed advantage of Liu is sending multiple beam pairs (transmitting and receiving beams) on the same channel to determine the best beam pair from all

possible beam pairs for maximum beamforming efficiency on that specific channel, as indicated by the patent specification of Liu.

> A misalignment between transmitting (Tx) and receiving (Rx) beams may cause a significant loss in the received power, especially for systems with narrow beams, and result in beam failure. To avoid such beam failure, beam alignment in mm-wave communication systems is necessary to ***find the best beam pair from all possible beam pairs for maximum beamforming efficiency***.

Id. at [0004] (emphasis added.

> In the embodiment of FIG. 4A, a single or unidirectional transmission and reception beam pair are illustrated, whereas in FIG. 4B, multiple directions or omnidirectional transmission and ***reception beam pairs are illustrated***. In either case, the system may ***determine the "best" beam pair(s) (e.g., the beam with the strongest signal, fastest DL/UL speed, etc.) for transmission and reception among the various reception and transmission directions***. In this regard, a signal received from the base station 402 from a particular receive direction can be identified as having a corresponding transmit direction to transmit to the base station 402.

Id. at [0080] (emphasis added). Liu sends the same BFRR radio signal twice on the same channel. Liu's patent specification and claims are replete with examples where the BFRR uses PUCCH ***or*** PRACH, but never both in one system.

> ***In one embodiment***, when PRACH is used, the BFRR is a preamble sequence. ***In another embodiment***, when PUCCH or PUCCH-like channel is used, the response may include a new beam index/quality and/or failed beam index.

Id. at [0085] (emphasis added).

> With reference to FIG. 6A, when a beam failure is detected by the user equipment llOA-llOC, the user equipment 110A-110B sends a beam failure recovery request (BFRR) to the servicing base station 170A-170B. ***In one embodiment, the BFRR uses the PUCCH*** to report the BFRR to the base station 170A-170B. ***In another embodiment, the BFRR uses PRACH*** or PRACH-like channel to report the BFRR to the base station 170A-170B.
>
> FIG. 6B illustrates a flow diagram of identifying a downlink beam pair. At 606, the user equipment 110A-110C sends a BFRR using a PUCCH, PRACH ***or*** PRACH-like channel, such that the user equipment 110A-110C may identify a DL beam pair for the corresponding base station 170A-170B to send the BFRR response in the UL beam pair at 608.

Id. at [0103]-[0104] (emphasis added).

That the method of Liu only sends BFRRs on one channel is also indicated by Liu's dependent claims, which are separated according to channel type.

> 5. The method of claim 1, wherein upon detection of the beam failure, the BFRR is sent using a physical uplink control channel (PUCCH) in the uplink beam pair.
>
> 6. The method of claim 5, wherein when the BFRR is sent using the PUCCH, the user equipment identifies a downlink beam pair for the base station to send the BFRR response in the uplink beam pair.
>
> 7. The method of claim 1, wherein upon detection of the beam failure, the BFRR is sent using a physical random access channel (PRACH) or a PRACH-like channel in the uplink beam pair.

Id. at Claims 5-7. As demonstrated by Liu's FIG. 5B, there are only two time offsets disclosed in Liu.

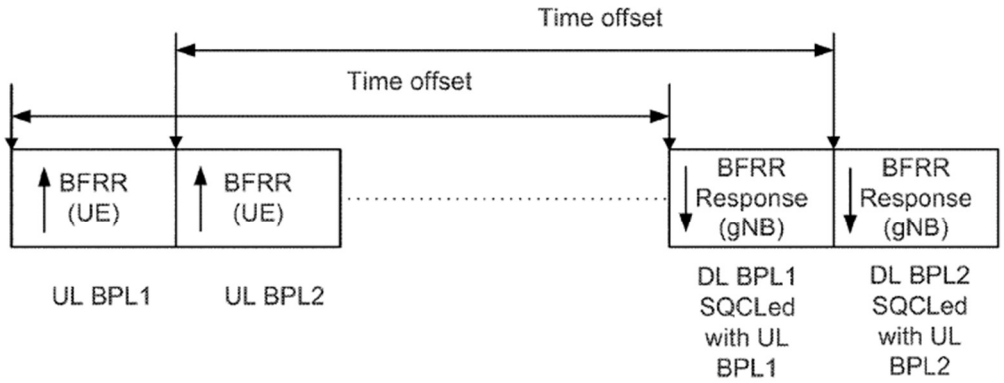

FIG. 5B

Ex. 1007, at FIG. 5B. FIG. 5B of Liu shows (1) a first time window that starts from the first BFRR awaiting a corresponding BFRR response; and (2) a second time window starts from the second BFRR awaiting a corresponding BFRR response. These time windows are noted by the "time offset" labels in Petitioner's annotated graphic. Such an understanding is confirmed by Liu itself:

> Optionally, in any of the preceding aspects, the association between ***the BFRR response and received BFRR is represented by a time offset from the BFRR reception to the starting position of a time window within which to transmit the BFRR response***.

Id. at [0035] (emphasis added).

> Optionally, in any of the preceding aspects, the association is represented by ***a time offset from the BFRR reception to the ending position of a time window within which to transmit the BFRR response***.

Id. at [0038] (emphasis added).

> In one embodiment, in order to recover the connection, a beam failure recovery request (BFRR) is sent by the user equipment in an attempt to reestablish the connection with the base station when a beam failure occurs. Using spatially quasi co-located information between a downlink beam pair and an uplink beam pair provided by the base station, the user equipment may ***monitor candidate beams in which to receive a BFRR response from the base station, where the BFRR response is associated with the BFRR and the downlink beam(s) is in a time slot with a time offset to the BFRR***.

Id. at [0054] (emphasis added).

> As explained in the example of FIGS. 4A and 4B, in the event of a beam failure, the user equipment 404 sends a BFRR in the UL beam pair (UL BPL) to the base station 402. In return, the base station 402 responds with a BFRR response in the DL beam pair (DL BPL) that is SQCL'ed with the UL beam pair used for BFRR transmission by the user equipment 404. In order to implement the BFRR and BFRR response procedure, a transmission occasion association between the BFRR (sent by the user equipment 404) and the BFRR response (sent by the base station 2402) is used to monitor the DL beams. In one embodiment, the transmission occasion association is indicated by a ***time offset such that UE should monitor the DL beams for the BFRR response from the base station*** 402, which is SQCL'ed with the BFRR from the user equipment 404, in a time slot with a time offset relative to the BFRR, as illustrated. Here ***the time slot is a time window for UE monitoring BFRR response and the time offset indicates the starting position of the response monitoring window relative to the BFRR.***

Id. at [0096] (emphasis added).

> FIG. 6D illustrates a flow diagram in which new candidate beams are received and identified by a base station. At 612, the base station 170A-170B receives a BFRR from

> user equipment 110A-110C identifying a new candidate beam, and transmits a BFRR response associated with the received BFRR at 614. In one embodiment, ***the association between the BFRR response and the received BFRR is represented by a time offset from the BFRR reception to the BFRR response transmission***. In another embodiment, ***the association between the BFRR response and the received BFRR is represented by a time offset from the BFRR reception to the starting position of a time window within which to transmit the BFRR response.***

Id. at [0106] (emphasis added).

B. U.S. Patent Application Publication No. 2015/0141026 ("Jover")

Jover "relate[s] to detecting jamming attacks at an endpoint device and techniques to minimize the effects of such jamming attacks." Ex. 1005 at [0001].

Jover's exemplary embodiment includes a method that "detects the communication impairment, performs a sweep to locate a direction of the source of the communication impairment, wherein the sweep is performed in response to the detecting the communication impairment at the endpoint device, and generates a null in the direction of the source of the communication impairment." *Id.* at [0003].

One way in which Jover decides to initiate its beam sweeping procedure is through monitoring a threshold condition, such as where BER is above a certain threshold or SNR is below a certain threshold.

> For example, wireless channel sensing engine 320 may detect a threshold drop in the SNR or SINR *(e.g.*, a 20 percent drop as compared to a preceding time period) an increase in the BER (*e.g.*, when the BER increases beyond

> one percent), and so forth. In one embodiment, when the wireless channel sensing engine 320 determines that one or more of such threshold conditions are met, the wireless channel sensing engine 320 may signal to the beam-forming engine 310 to begin the beam sweeping procedure.

Id. at [0040].

IV. CLAIM CONSTRUCTION

37 C.F.R. § 42.104 governs the required content of the petition. 37 C.F.R. § 42.104(b)(3) specifically requires the Petitioner to point out "[h]ow the challenged claim is to be construed" and also "[w]here the claim to be construed contains a means-plus-function or step-plus-function limitation as permitted under 35 U.S.C. § 112(f), the construction of the claim must identify the specific portions of the specification that describe the structure, material, or acts corresponding to each claimed function." 37 C.F.R. § 42.104(b)(3).

A. "triggering the transmission"

Despite the Parties not proposing any claim constructions during the Institution phase, Petitioner has apparently improperly construed "triggering the transmission" in the same way as "transmission". *See infra* Section VII.A.2; Ex. 2005, ¶ 34. Patent Owner proposes the following claim construction: "triggering the transmission" should be construed to mean "cause the transmission." *Id.*

Petitioner's construction of this term to read out the word "triggering" runs contrary to the general assumption that different terms have different meanings, and

therefore should be rejected. *CAE Screenplates Inc. v. Heinrich Fiedler GmbH & Co. KG*, 224 F.3d 1308, 1317 (Fed. Cir. 2000) ("In the absence of any evidence to the contrary, we must presume that the use of these different terms in the claims connotes different meanings."); *Neville v. Found. Constructors, Inc.*, 972 F.3d 1350, 1357 (Fed. Cir. 2020) (rejecting argument that "end plate" can be an indistinguishable part of the "protrusion" where claimed protrusion extends outwardly from an end plate; "While the 'protrusion' and 'end plate' structures must be connected in some fashion, the use of these 'two terms in a claim requires that they connote different meanings.'"); *Apple Inc. v. Firstface Co.*, No. 2021-1001, 2021 WL 4156323, at *1–*2 (Fed. Cir. Sept. 13, 2021) (aff'g PTAB non-obviousness; that one claim uses both "perform" and "initiate" reinforces that "performing" (without additional user input) means full performance of the function (without additional user input) not just initiating it).

A person of ordinary skill in the art would understand that the patent specification points to no specific meaning of the word "triggering" other than the plain and ordinary meaning of the term, which can be ascertained from any dictionary:

> "cause to happen"

Ex. 2005, ¶ 34 (https://www.thesaurus.com/browse/triggering).

> "to cause something to start"

Id. (https://dictionary.cambridge.org/us/dictionary/english/trigger).

As a result of Petitioner's improper construction of "triggering the transmission," as noted below (*see infra* Section VII.A.2), Patent Owner requests that the Board provide an express claim construction that "triggering the transmission" is different than mere "transmission" and that "triggering the transmission" means "causing the transmission." *Id.* at ¶ 35.

B. "first time window"; "second time window"; and "third time window"

In order to more fully establish the non-obviousness of the challenged claims, Patent Owner believes that the Board would benefit from an express construction of the terms, "first time window," "second time window," and "third time window" to make clear its bounds in the context of Petitioner's arguments. *Realtime Data, LLC v. Iancu*, 912 F.3d 1368, 1375 (Fed. Cir. 2019) (alteration in original) (quoting *Vivid Techs., Inc. v. Am. Sci. & Eng'g, Inc.*, 200 F.3d 795, 803 (Fed. Cir. 1999)) ("The Board is required to construe 'only those terms . . . that are in controversy, and only to the extent necessary to resolve the controversy.'").

Therefore, Patent Owner proposes the following claim constructions:

> "first time window": a period of time from the first radio signal in which to receive a third radio signal (*i.e.*, a response to either the first or second radio signals)
>
> "second time window": "a period of time from the first radio signal in which to transmit the second radio signal"

> "third time window": "a period of time from the second radio signal in which to receive a third radio signal (*i.e.*, a response to either the first or second radio signals)"

Ex. 2005, ¶ 36.

A person of ordinary skill in the art would understand that each of the claimed time windows are "a period time," as Petitioner's own expert admits:

> Q. Right, and Figure 6 shows time windows; my question is what is a time window?
>
> A. A time window as shown in Figure 6 is ***a period of time*** on the time axis.

Ex. 2006, 75:6-11 (emphases added); Ex. 2005, ¶ 37.

Petitioner's expert's definition of "time windows" comports with the plain and ordinary meaning identified by Wiley Electrical and Electronics Engineering Dictionary:

> **window**:
>
> **1.** A time interval during which an activity may take place. Also, a time interval during which an activity must take place.

Steven M. Kaplan, Wiley Electrical and Electronics Engineering Dictionary, 2006. *Id.* ¶ 38. The Petition does not engage with "which [] activity [may]/[must] take place" in the first, second, and third "periods of time," rendering the time window terms arbitrary without further construction. Ex. 2005, ¶ 38.

Embodiment 6 "illustrates an example of a first time window, a second time

window and a third time window, as shown in FIG. 6." '113 Patent, 22:44-46.

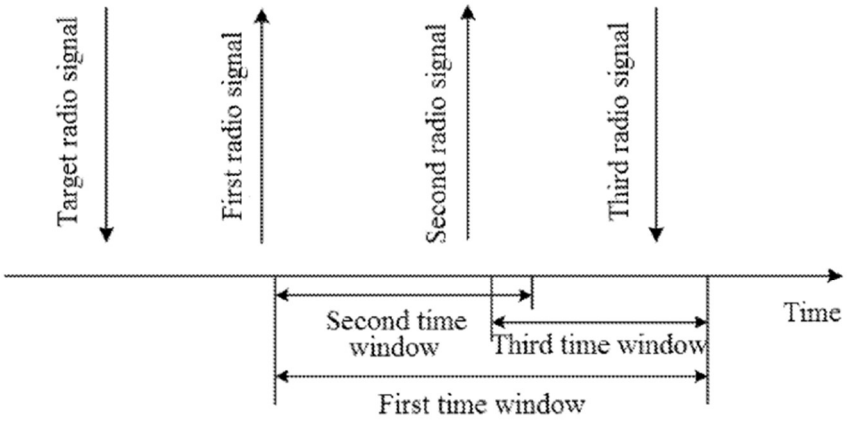

FIG.6

Id. at FIG. 6. In combination with the claim language, which recites "monitoring a third radio signal in a first time window," the first time window (which includes both the second and third time window) is a period of time allocated in order to receive a response to the signal requests of the first and second radio signals, where the response is indicated by the monitored third radio signal, as shown in Fig. 6 above. Ex. 2005, ¶ 39.

The "first time window" is also described by the patentee as below:

> The inventor finds through researches that: if a UE, after using one channel to transmit a beam recovery request, cannot transmit the beam recovery request again during ***the time window of waiting a response***, then a time-frequency resource configured within ***the time window of waiting the response to transmit a beam recovery request*** cannot be used by the UE to transmit a beam recovery request, which consequently results in a low utilization of

> the time-frequency resource configured for transmitting the beam recovery request.

'113 Patent, 1:43-52 (emphasis added); Ex. 2005, ¶ 40. The "third time window" is related to the "first time window" because it is a portion of the first time window starting from the second radio signal in which to receive a third radio signal. *See, e.g.,* Claim 1 ("a time domain resource occupied by the second radio signal is used for determining a third time window, and the end time of the third time window is the end time of the first time window); Ex. 2005, ¶ 40.

The "second time window" of Claims 1, 6, 11, and 16 is described with respect to Embodiment 6. It has a different function than the first and third time windows, as the '113 patent specifies:

> The UE conducts monitoring of the third radio signal in a ***time interval between the start time of the first time window and the time domain resource occupied by the second radio signal***, but does not detect the third radio signal. The third radio signal is transmitted after the second radio signal.

'113 Patent, 22:56-60 (emphasis added); Ex. 2005, ¶ 41. Namely, the '113 Patent describes the second time window as a time interval or period of time between the start of the first time window and the time domain resource occupied by the second radio signal (the same time domain resource that is used to determine a third time window, as indicated in Claim 1). Ex. 2005, ¶ 41. While it is possible that a "third radio signal" (*e.g.*, a signal responsive to the request of the first radio signal) is

received during this second time window (part of the first time window) and before the third time window, Fig. 6 shows the scenario where the third radio signal is received in the third time window. *Id.* The '113 Patent specification further confirms that the second time window is defined as the period of time from the first radio signal in which to receive the second radio signal because it explicitly states that "[the]/[a] time domain resource occupied by the second radio signal is within the second time window." '113 Patent, 22:53-54; Claim 1; *id.* A person of ordinary skill in the art would understand that, if the second time window was merely a period of time from the first radio signal in which to receive a responsive signal (*i.e.*, a third radio signal), it would be possible to reach a scenario that a second radio signal falls outside the second time window, which defies the limitations of the claim. Ex. 2005, ¶ 41.

V. LEVEL OF ORDINARY SKILL IN THE ART

In its Preliminary Response, Patent Owner utilized Petitioner's proposed level of skill in the art— a person of ordinary skill in the art ("POSITA") would have had "at least a master's degree in electrical engineering or a similar field and at least two years of experience working with telecommunications systems . . ." and that "[a]dditional relevant work experience can compensate for less education, and *vice versa*." Pet. At 13; Ex. 2005, ¶ 27. The Board noted that "Petitioner's last sentence regarding additional relevant work experience compensating for less education and

vice versa, [] is vague" Inst. At 11; Ex. 2005, ¶ 27. In view of the Board's guidance, Patent Owner proposes that a POSITA would have had either (i) at least a master's degree in electrical engineering or a similar field and at least two years of experience working with telecommunications systems; or (ii) at least a bachelor's degree in electrical engineering or a similar field and at least five years of experience working with telecommunications systems. Ex. 2005, ¶ 27.

VI. REQUIREMENTS UNDER 35 U.S.C. § 103

The question of obviousness is resolved on the basis of underlying factual determinations, including: (1) the scope and content of the prior art, (2) any differences between the claimed subject matter and the prior art, (3) the level of skill in the art, and (4) where in evidence, so called secondary considerations. *See Graham v. John Deere Co. of Kansas City*, 383 U.S. 1, 17–18 (1966). Failure to identify the differences between the claimed subject matter and the prior art is fatal to an obviousness challenge. *See Apple, Inc. v. Contentguard Holdings, Inc.*, IPR2015-00355, Paper 9 at 9-10 (P.T.A.B. June 26, 2015).

To arrive at obviousness, the Board must sufficiently explain and support the conclusions that the prior art references disclose all the elements recited in the Challenged Claims and a relevant skilled artisan not only could have made but would

have been motivated to combine all the prior art references in the way the patent claims. *See Pers. Web Techs., LLC v. Apple, Inc*., 848 F.3d 987, 994 (Fed. Cir. 2017).

Even if all the claim elements are found across a number of references, an obviousness determination must consider whether a POSITA would have been motivated to combine those references. *See Intelligent Bio-Sys., Inc. v. Illumina Cambridge Ltd*., 821 F.3d 1359, 1368 (Fed. Cir. 2016); *Los Angeles Biomedical Rsch. Inst. At Harbor-UCLA Med. Ctr. V. Eli Lilly Co*., 849 F.3d 1049, 1067 (Fed. Cir. 2017).

The Supreme Court explained in *KSR Int'l Co. v. Teleflex Inc.* that "[o]ften, it will be necessary for a court to look to interrelated teachings of multiple patents; the effects of demands known to the design community or present in the marketplace; and the background knowledge possessed by a person having ordinary skill in the art, all in order to determine whether there was an apparent reason to combine the known elements in the fashion claimed by the patent at issue. To facilitate review, this analysis should be made explicit." 550 U.S. 398, 418 (2007). This combination determination, as supported by an articulated motivation to combine, requires a plausible rationale as to why those prior art references would have worked together. *See Broadcom Corp. v. Emulex Corp*., 732 F.3d 1325, 1335 (Fed. Cir. 2013). Additionally, "knowledge of a problem and motivation to solve it are entirely different from motivation to combine particular references." *See Innogenetics, N.V.*

v. Abbott Lab'ys., 512 F.3d 1363, 1373 (Fed. Cir. 2008).

VII. PETITIONER HAS NOT PROVED INVALIDITY OF THE CHALLENGED CLAIMS BY A PREPONDERANCE OF THE EVIDENCE

As set forth below, and in view of both the Petition ("Paper No. 1" or "Pet.") and the Board's Institution Decision ("Paper No. 11" or "Inst."), Petitioner has failed to demonstrate by a preponderance of the evidence that the Challenged Claims are obvious in view of the asserted prior art.

A. Liu Alone or in Combination with Jover Does Not Render Claims 1-5 Obvious

1. Liu in Combination with Jover Does Not Render Obvious "*transmitting a second radio signal on a second channel*," as Required by Claim 1, or "*The method according to claim 1, wherein the first channel is a first type of physical layer channel, the second channel is a second type of physical layer channel, and the first type of physical layer channel and the second type of physical layer channel are two different types of physical layer channels*," as Required by Claim 3

Claim 1 recites the limitation "transmitting a second radio signal on a second channel." Petitioner only relies on Liu to render obvious these claim limitations. Ex. 2005, ¶ 42.

Petitioner cannot show that Liu teaches "transmitting a second radio signal on a second channel" because Petitioner relies on the same signal sent twice over the same channel to meet the first signal and second signal limitations. *Id.* ¶ 43.

Liu sends the BFRR radio signals ***on the same channel***. *Id.* ¶ 44. Liu's patent specification and claims are replete with examples where the BFRR uses PUCCH ***or*** PRACH, but never both in one system:

> Optionally, in any of the preceding aspects, upon detection of the beam failure, the BFRR is sent using a physical uplink control channel (PUCCH) in the uplink beam pair.
>
> **…**
>
> Optionally, in any of the preceding aspects, upon detection of the beam failure, the BFRR is sent using a physical random access channel (PRACH) or a PRACH-like channel in the uplink beam pair.

Id. (citing Ex. 1007 at [0009]-[0011]).

> ***In one embodiment***, when PRACH is used, the BFRR is a preamble sequence. ***In another embodiment***, when PUCCH or PUCCH-like channel is used, the response may include a new beam index/quality and/or failed beam index.

Id. (citing Ex. 1007 at [0085] (emphasis added)).

> With reference to FIG. 6A, when a beam failure is detected by the user equipment 110A-110C, the user equipment 110A-110B sends a beam failure recovery request (BFRR) to the servicing base station 170A-170B. ***In one embodiment, the BFRR uses the PUCCH*** to report the BFRR to the base station 170A-170B. ***In another embodiment, the BFRR uses PRACH*** or PRACH-like channel to report the BFRR to the base station 170A-170B.
>
> FIG. 6B illustrates a flow diagram of identifying a downlink beam pair. At 606, the user equipment 110A-110C sends a BFRR using a PUCCH, PRACH ***or*** PRACH-like channel, such that the user equipment 110A-110C may identify a DL beam pair for the corresponding

> base station 170A-170B to send the BFRR response in the UL beam pair at 608.

Id. (citing Ex. 1007 at [0103]-[0104] (emphasis added)).

That the method of Liu only sends BFRRs on one channel is also indicated by Liu's dependent claims, which are separate according to channel type.

> 5. The method of claim 1, wherein upon detection of the beam failure, the BFRR is sent using a physical uplink control channel (PUCCH) in the uplink beam pair.
>
> 6. The method of claim 5, wherein when the BFRR is sent using the PUCCH, the user equipment identifies a downlink beam pair for the base station to send the BFRR response in the uplink beam pair.
>
> 7. The method of claim 1, wherein upon detection of the beam failure, the BFRR is sent using a physical random access channel (PRACH) or a PRACH-like channel in the uplink beam pair.

Id. ¶ 45 (citing Ex. 1007, Claims 5-7).

It would not be obvious at all to modify the system of Liu to have one BFRR sent by PUCCH and one sent by PRACH because the disclosed advantage of Liu is sending multiple beam pairs (transmitting and receiving beams) on the same channel to determine the best beam pair from all possible beam pairs for maximum beamforming efficiency on that specific channel, as indicated by the patent specification of Liu:

> A misalignment between transmitting (Tx) and receiving (Rx) beams may cause a significant loss in the received power, especially for systems with narrow beams, and

> result in beam failure. To avoid such beam failure, beam alignment in mm-wave communication systems is necessary to ***find the best beam pair from all possible beam pairs for maximum beamforming efficiency***.

Id. ¶ 46 (citing Ex. 1007, [0004] (emphasis added)).

Based on the aforementioned examples, the Board correctly noted that "it is unclear on this record whether it can be read to explicitly teach transmitting BFRR signals on two different channels. Elsewhere, as Patent Owner notes, Liu appears to describe using the PUCCH and PRACH as alternatives." Paper No. 11, at 18-19; Ex. 2005, ¶ 47. However, the Board incorrectly assumed that "the modification [from transmitting BFRRs on one channel to BFRRs on two different channels] would have been straightforward" with "a reasonable expectation of success." Ex. 2005, ¶ 47. As Petitioner's expert acknowledges, several design modifications would have to be made that would require a level beyond that of a person of ordinary skill in the art. *Id.* For example, the design modification (obtained only through hindsight) could take place on either the hardware or software side. *Id.*

On the hardware side, to modify a system that transmits a pair of BFRRs on the same channel to a system that transmits a pair of BFRRs, with each BFRR on different channels, "a person of ordinary skill would use well-known techniques to add additional logic gates that would redirect the message to the PRACH circuitry that was added to the system." Ex. 2006, 72:15-25; Ex. 2005, ¶ 48. Dr. Bims continues that "the techniques could be applied in a VLSI design by adding logic

gates that will receive information from a hardware component and those logic gates would direct the received signal to a portion of the hardware circuitry designed to transmit information on the PRACH and that would occur using transistor logic to redirect the message." Ex. 2006, 73:1-14; Ex. 2005, ¶ 48.

On the software side, "what would be required is a modification to the source code that would send the information on the PUCCH to instead designate the information be sent on the PRACH, which may be something as simple as changing the function that gets called to transmit the message." Ex. 2006, 69:13-70:9; Ex. 2005, ¶ 49. Yet, Dr. Bims, Petitioner's expert was unable to name or describe such a function with specificity. *See generally* Ex. 2006, 66:17-73:14; Ex. 2005, ¶ 50.

A person of ordinary skill in the art would have understood Liu to not disclose sending two BFRRs, each BFRR on a different channel, and would not have been motivated to combine the system of Liu with their knowledge of the existence of two channels in order to create a system where each BFRR was transmitted on a different channel in view of the deep technical expertise required to re-design the system of Liu in either hardware, software, or a mix of both. Ex. 2005, ¶ 51. Petitioner's expert's inability to articulate design implementations with specificity demonstrates this point, as noted above. *Id.*

A person of ordinary skill in the art at the time of the invention of the '113 Patent would have known that using two BFRRs, each from PUCCH and PRACH,

is also not traditionally done as the two protocols, PUCCH and PRACH are used at different times and for somewhat different purposes. *Id.* ¶ 52. PRACH generally has lower reliability, and is intended to be used during initial network entry whereas PUCCH is used once PUCCH resources are allocated. *Id.* Therefore, a person of ordinary skill in the art would not find it obvious to use a channel intended to setup resources in place of a channel that requires allocated resources or the two channels in conjunction with each other. *Id.* At the time of the invention of the ’113 Patent, a person of ordinary skill in the art would have found it more common to utilize the best channel for its intended purpose and then fall back to lower reliable services on a different channel if, and only if, required. *Id.* That is the way the conventional protocol was designed, and is the protocol described in Liu. *Id.* A person of ordinary skill in the art would have found that the ’113 patent teaches a different mechanism than Liu because the ’113 Patent is trying to solve a resource utilization problem in a different way (*i.e.*, transmitting a beam recovery request on a different channel than another beam recovery request within a common time window) than envisioned by the conventional systems, such as Liu. *Id.*

> The inventor finds through researches that: if ***a UE, after using one channel to transmit a beam recovery request, cannot transmit the beam recovery request again during the time window of waiting a response***, then a time-frequency resource configured within the time window of waiting the response to transmit a beam recovery request cannot be used by the UE to transmit a beam recovery request, which ***consequently results in a low utilization of***

> ***the time-frequency resource configured for transmitting the beam recovery reques***t.
>
> In view of the above problems, the present disclosure provides a solution.

'113 Patent, at 1:43-54 (emphasis added); *id.*

Therefore, Claim 1 is not rendered obvious by Liu in combination with Jover. *Id.*

2. Liu in Combination with Jover Does Not Render Obvious "*wherein a measurement for the target radio signal obtains a target measurement value, the target measurement value, when higher than a target threshold is used for triggering the transmission of the first radio signal and the second radio signal*," as Required by Claim 1

Claim 1 recites the limitation "wherein a measurement for the target radio signal obtains a target measurement value, the target measurement value, when higher than a target threshold is used for triggering the transmission of the first radio signal and the second radio signal."

Petitioner relies on Jover for showing that BER could be used as a target measurement value. Pet. at 24-27; Ex. 2005, ¶ 54. Petitioner proceeds to cite to its expert declaration which, in turn, cites to various other alleged prior art references that it used in the District Court Litigation, including "Pandey" and "Vembu," to show the use of BER in determining whether beam failure occurred. *Id.*; *see* Ex. 2001, at 55-56.

However, the context in which Jover's threshold condition for an increase in

BER is not used for triggering a transmission of the first and second radio signal, as required by this claim limitation:

> For example, wireless channel sensing engine 320 may detect a threshold drop in the SNR or SINR (e.g., a 20 percent drop as compared to a preceding time period) an increase in the BER (e.g., when the BER increases beyond one percent), and so forth. In one embodiment, when the wireless channel sensing engine 320 determines that one or more of such threshold conditions are met, the wireless channel sensing engine 320 ***may signal to the beam-forming engine 310 to begin the beam sweeping procedure***.

Ex. 1005, at [0040] (emphasis added); Ex. 2005, ¶ 54.

A person of ordinary skill in the art would not understanding "the beam sweeping procedure" to be the transmission of the first and second radio signals. *Id.*, ¶ 55. Petitioner avoids addressing whether Liu, Jover, or any of the other references cited would use BER as a threshold for "causing" or "triggering the transmission of the first radio signal and the second radio signal." *Id.* As noted above, a person of ordinary skill in the art would understand that "causing the transmission" requires causality between the threshold being exceeded and transmitting the first and second radio signal. *Id.* The required link of causality is missing from Jover. *Id.*

In view of Petitioner's incorrect construction of this claim limitation that reads out the term "triggering" in the claim language, Petitioner cannot prove that this claim limitation is rendered obvious by Liu alone or in combination with Jover by a preponderance of the evidence. *Id.* ¶ 56.

3. Liu in Combination with Jover Does Not Render Obvious "*a time domain resource occupied by the first radio signal is used for determining a second time window,*" "*a time domain resource occupied by the second radio signal is within the second time window, and the second time window is within the first time window,*" and "*the second time window and the third time window have overlapped time domain resource(s),*" as Required by Claim 1.

Claim 1 recites the limitations "a time domain resource occupied by the first radio signal is used for determining a second time window," "a time domain resource occupied by the second radio signal is within the second time window, and the second time window is within the first time window," and "the second time window and the third time window have overlapped time domain resource(s)." Petitioner only relies on Liu to render obvious these claim limitations. *Id.* ¶ 57.

Petitioner relies on an annotated version of Liu's Fig. 5B to render obvious the claimed "second time window," as shown below:

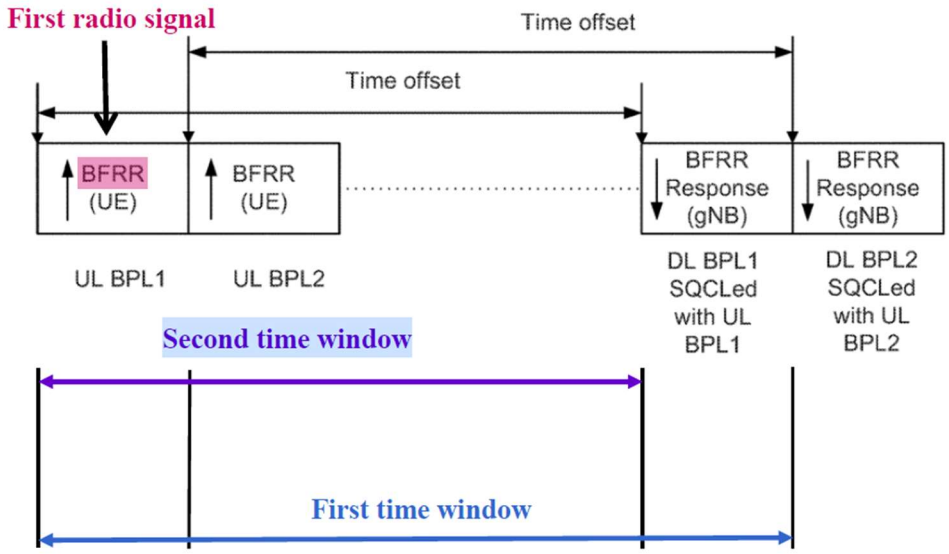

Pet. at 29 (citing Ex. 1007, FIG. 5B); Ex. 2005, ¶ 57. In particular, Petitioner argues that the second time window is the designated time offset from the first BFRR (UE) to the first BFRR Response (gNB). *Id.* Petitioner's argument contradicts the proper construction of the "second time window" as "a period of time from the first radio signal in which to transmit the second radio signal," as described in Section IV.B because Petitioner's proposed second time window from Liu completely ignores when the second radio signal (*i.e.*, allegedly Liu's second BFRR (UE)) is transmitted. *Id.*

As noted in Section IV.B, the purpose of a second time window is ensuring that the second radio signal is transmitted within a certain period of time from the first radio signal which overlaps with the period of time from the second radio signal to receive a responsive third radio signal. *Id.* ¶ 58. In that way, the other elements of the claim can be met: "A time domain resource occupied by the second radio signal is within the second time window" and "and the second time window and the third time window have overlapped time domain resource(s)." *Id.*

Therefore, Claim 1 is not rendered obvious by Liu in combination with Jover.

B. Liu in Combination with Jover Does Not Render Claims 2-20 Obvious

Claims 2-5 depend upon Claim 1, and for at least the same reasons as Claim 1, Liu in combination with Jover fails to obviate Claims 2-5. Ex. 2005, ¶ 60.

Claims 6-10 recites "[a] method in a base station for wireless communication"

that mirrors the claim limitations of Claims 1-5, which recites "[a] method in a User Equipment (UE) for wireless communication." *Id.* ¶ 61. In other words, Claims 6-10 disclose a method from the perspective of the base station that is in communication with the UE in Claims 1-5. *Id.* For at least the same reasons as Claims 1-5, Liu in combination with Jover fails to obviate Claims 6-10. *Id.*

Claims 11-15 recite "[a] UE for wireless communication," which are the apparatus claims of Claims 1-5. *Id.*, ¶ 62. For at least the same reasons as Claims 1-5, Liu in combination with Jover fails to obviate Claims 11-15. *Id.*

Claims 16-20 recite "[a] base station device for wireless communication" that mirrors the claim limitations of Claims 11-15, which recites "[a] UE for wireless communication." *Id.* ¶ 63. In other words, Claims 16-20 discloses the base station device that is in communication with the UE in Claims 11-15. *Id.* For at least the same reasons as Claim 11, Liu in combination with Jover fails to obviate Claims 16-20. *Id.*

C. There is No Motivation to Combine Liu with Jover

A person of ordinary skill in the art would not have looked to combine Liu with Jover or look to Jover at all since Jover is directed to the opposite objective of the '113 Patent or Liu. *Id.* ¶ 64.

Where Liu looks to employ a beam failure reporting and recovery mechanism that entails finding the best beam pair from all possible beam pairs (*see* Ex. 1007, at

[0004]-[0006]), Jover looks to solve a channel impairment specific to a region in space, such as jamming, by steering beams to ignore signals from a certain area (*i.e.*, "beam steering and null generation"):

> In particular, the present disclosure relates to any cellular network suitable for use with endpoint devices having multiple antennas/directional antennas for beam steering and null generation.

See, e.g., Ex. 1005, at [0033]; *id.* ¶ 65. As another example, Jover's exemplary embodiment includes a method that "detects the communication impairment, performs a sweep to locate a direction of the source of the communication impairment, wherein the sweep is performed in response to the detecting the communication impairment at the endpoint device, and generates a null in the direction of the source of the communication impairment." Ex. 1005, [0003]; Ex. 2005, ¶ 65.

A person of ordinary skill in the art would not understand Jover to describe, or be related to, the beam recovery request methodology of the '113 Patent. Ex. 2005, ¶ 66. Instead, Jover teaches away from the methods related to Beam Recovery Requests disclosed in the '113 Patent that seek to maximize aerial resources by transmitting multiple beam recovery requests within the same time window to increase signal strength. '113 Patent, 1:25-59; *id.* ¶ 66. Jover provides no attempt to improve the beam strength, but rather ignores it through beam sweeping or nullify it, in contrast to the purpose of the '113 Patent. Ex. 2005, ¶ 66.

Because Petitioner's sole ground for obviousness is the combination of Liu and Jover, Petitioner cannot prove that Challenged Claims are rendered obvious. *Id.* ¶ 66.

VIII. CONCLUSION

Petitioner's combinations fail to render obvious any Challenged Claim. The Board should issue a Final Written Decision finding the Challenged Claims not unpatentable.

Respectfully submitted,

Dated: December 26, 2023 By: */Vincent J. Rubino, III /*

Vincent J. Rubino, III (Reg. No. 68,594)
Lead Counsel for Patent Owner
FABRICANT LLP
411 Theodore Fremd Avenue
Suite 206 South
Rye, New York 10580
Tel. 212-257-5797
Fax. 212-257-5796
Email: vrubino@fabricantllp.com

CERTIFICATE OF WORD COUNT

The undersigned hereby certifies that the portions of the above-captioned PATENT OWNER'S RESPONSE specified in 37 C.F.R. § 42.24 has 7,603 words in compliance with the 14,000 word limit set forth in 37 C.F.R. § 42.24. This word count was prepared using Microsoft Word for Office 365.

Respectfully submitted,

December 26, 2023 By: */Vincent J. Rubino, III /*

Vincent J. Rubino, III (Reg. No. 68,594)
Lead Counsel for Patent Owner
FABRICANT LLP
411 Theodore Fremd Avenue
Suite 206 South
Rye, New York 10580
Tel. 212-257-5797
Fax. 212-257-5796
Email: vrubino@fabricantllp.com

CERTIFICATE OF SERVICE

A copy of the foregoing Patent Owner's Response and Exhibit 2005 to 2006 have been served on Petitioner's counsel of record as follows:

Joshua L. Goldberg
Email: joshua.goldberg@finnegan.com
Nicholas A. Cerulli
Email: nicholas.cerulli@finnegan.com
Mingji Jin
Email: mingji.jin@finnegan.com
Chen Zang
Email: chen.zang@finnegan.com
FINNEGAN, HENDERSON, FARABOW,
GARRETT & DUNNER, LLP
901 New York Avenue, NW
Washington, DC 20001-4413

Kevin D. Rodkey
Email: kevin.rodkey@finnegan.com
FINNEGAN, HENDERSON, FARABOW,
GARRETT & DUNNER, LLP
271 17th Street NW, Suite 1400
Atlanta, GA 30363-6209

Yi Yu
Email: yi.yu@finnegan.com
FINNEGAN, HENDERSON, FARABOW,
GARRETT & DUNNER, LLP
1875 Explorer Street
Reston, VA 20190-6023

Attorneys for Samsung Electronics Co., Ltd. and
Samsung Electronics America, Inc.

December 26, 2023 By: */Vincent J. Rubino, III /*

Vincent J. Rubino, III (Reg. No. 68,594)
Lead Counsel for Patent Owner
FABRICANT LLP
411 Theodore Fremd Avenue,
Suite 206 South
Rye, New York 10580
Tel. 212-257-5797
Fax. 212-257-5796
Email: vrubino@fabricantllp.com