US 20100202560A1

(19) United States

(12) Patent Application Publication

Luo et al.

(10) Pub. No.: US 2010/0202560 A1

(43) Pub. Date: Aug. 12, 2010

(54) ANTENNA VIRTUALIZATION IN A WIRELESS COMMUNICATION ENVIRONMENT

(75) Inventors: **Xiliang Luo**, San Diego, CA (US); **Amir Farajidana**, San Diego, CA (US); **Xiaoxia Zhang**, San Diego, CA (US); **Juan Montojo**, San Diego, CA (US)

Correspondence Address:
**QUALCOMM INCORPORATED**
**5775 MOREHOUSE DR.**
**SAN DIEGO, CA 92121 (US)**

(73) Assignee: **QUALCOMM INCORPORATED**, San Diego, CA (US)

(21) Appl. No.: **12/697,689**

(22) Filed: **Feb. 1, 2010**

**Related U.S. Application Data**

(60) Provisional application No. 61/149,325, filed on Feb. 2, 2009.

**Publication Classification**

(51) **Int. Cl.**
*H04L 27/00* (2006.01)

(52) **U.S. Cl.** ..... **375/295**

(57) **ABSTRACT**

Systems and methodologies are described that facilitate performing antenna virtualization in a wireless communication environment. A set of physical transmit antennas can be partitioned into a plurality of groups of physical transmit antennas. Further, a precoding vector for a particular group of physical transmit antennas from the plurality of groups of physical transmit antennas can be formulated. Moreover, the particular group of physical transmit antennas can form a particular virtual antenna. By way of another example, a disparate precoding vector for a disparate group of physical transmit antennas from the plurality of groups of physical transmit antennas can be formulated, and the disparate group of physical transmit antennas can form a disparate virtual antenna. The precoding vector can be applied to a signal for transmission over the particular virtual antenna, and the disparate precoding vector can be applied to a disparate signal for transmission over the disparate virtual antenna.

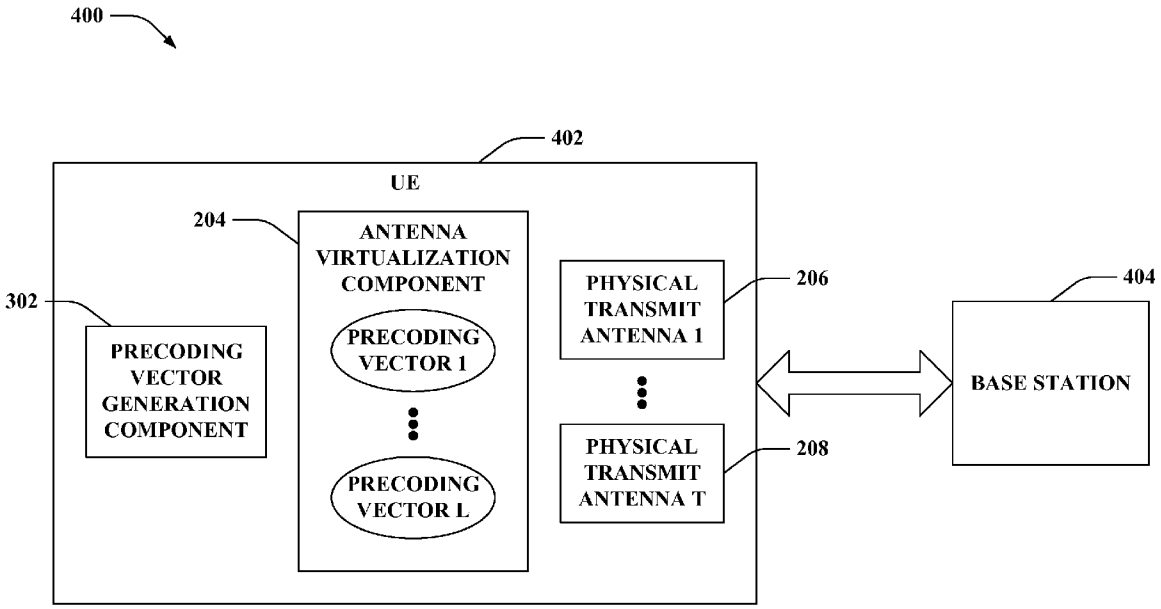

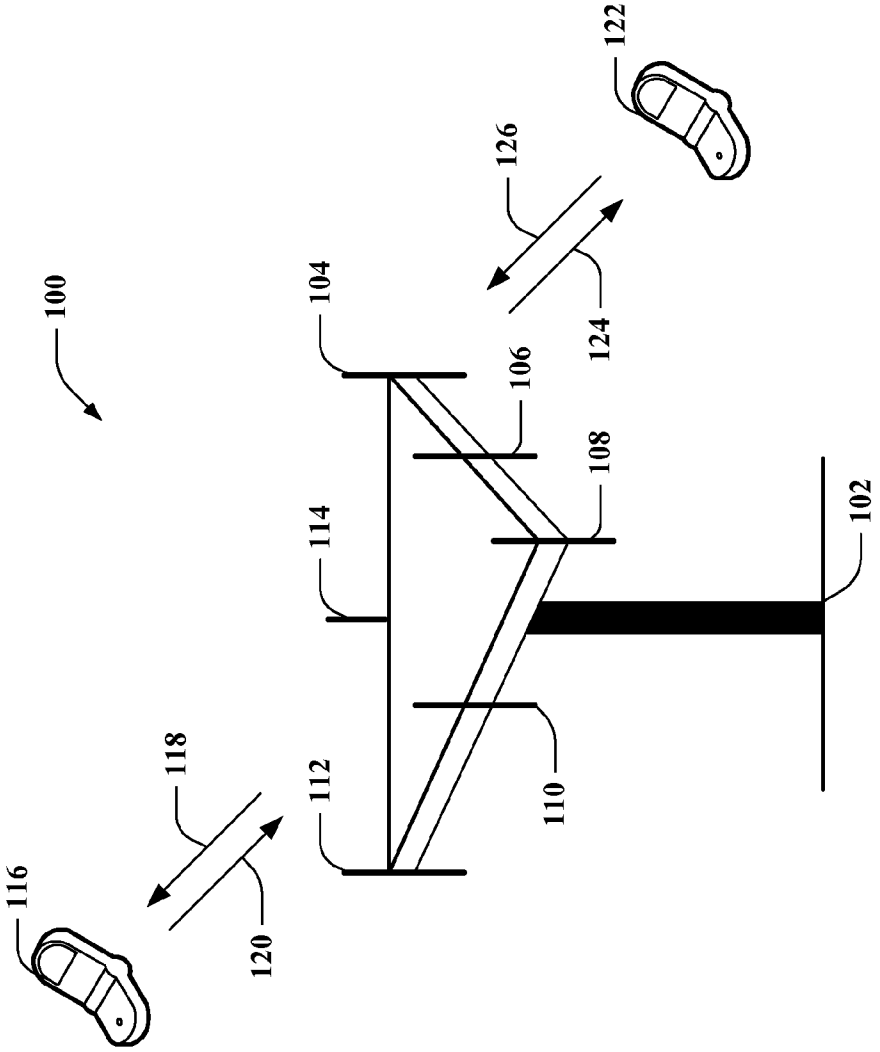


FIG. 1

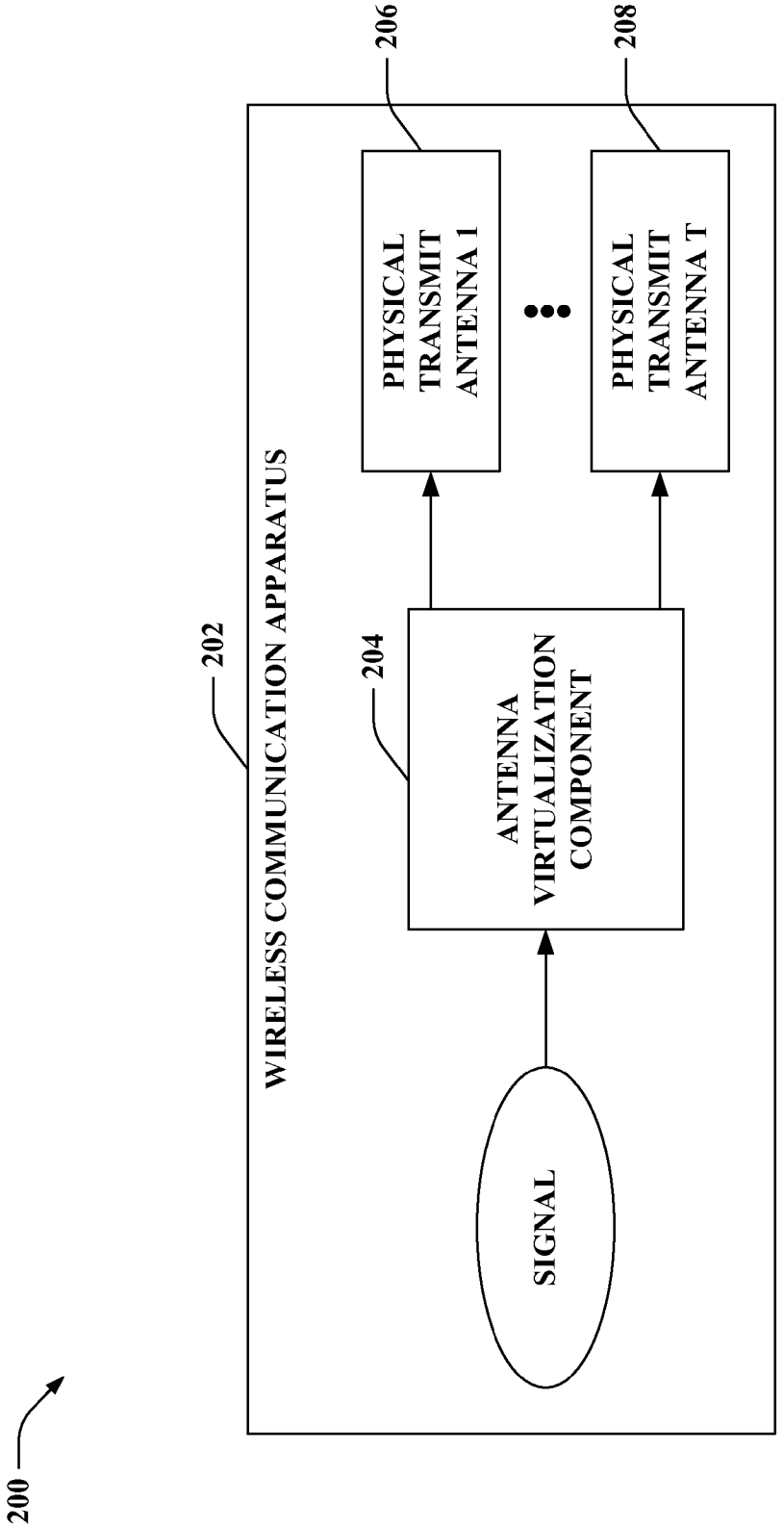
200
202
WIRELESS COMMUNICATION APPARATUS
204
ANTENNA VIRTUALIZATION COMPONENT
206
PHYSICAL TRANSMIT ANTENNA 1
208
PHYSICAL TRANSMIT ANTENNA T
SIGNAL

FIG. 2

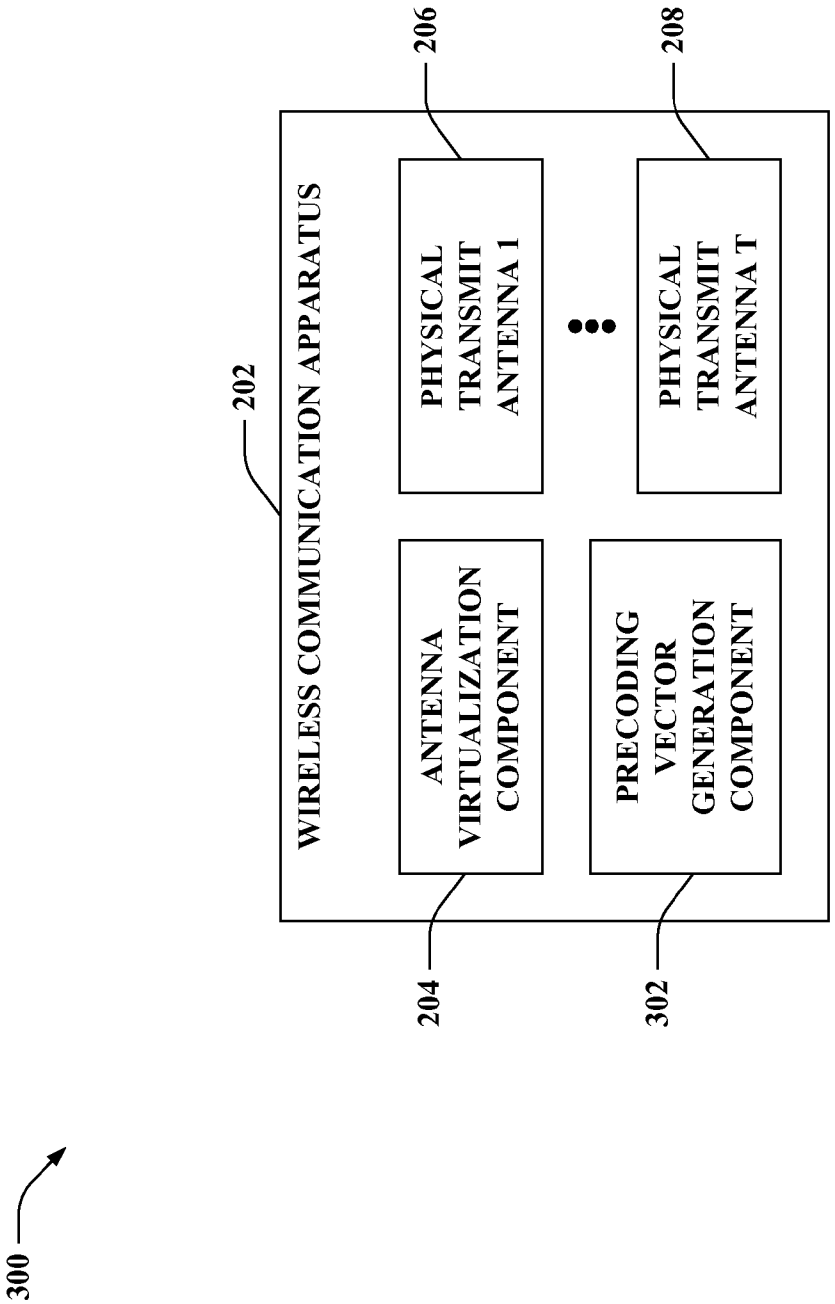
300
202
WIRELESS COMMUNICATION APPARATUS
204
ANTENNA VIRTUALIZATION COMPONENT
206
PHYSICAL TRANSMIT ANTENNA 1
208
PHYSICAL TRANSMIT ANTENNA T
302
PRECODING VECTOR GENERATION COMPONENT

FIG. 3

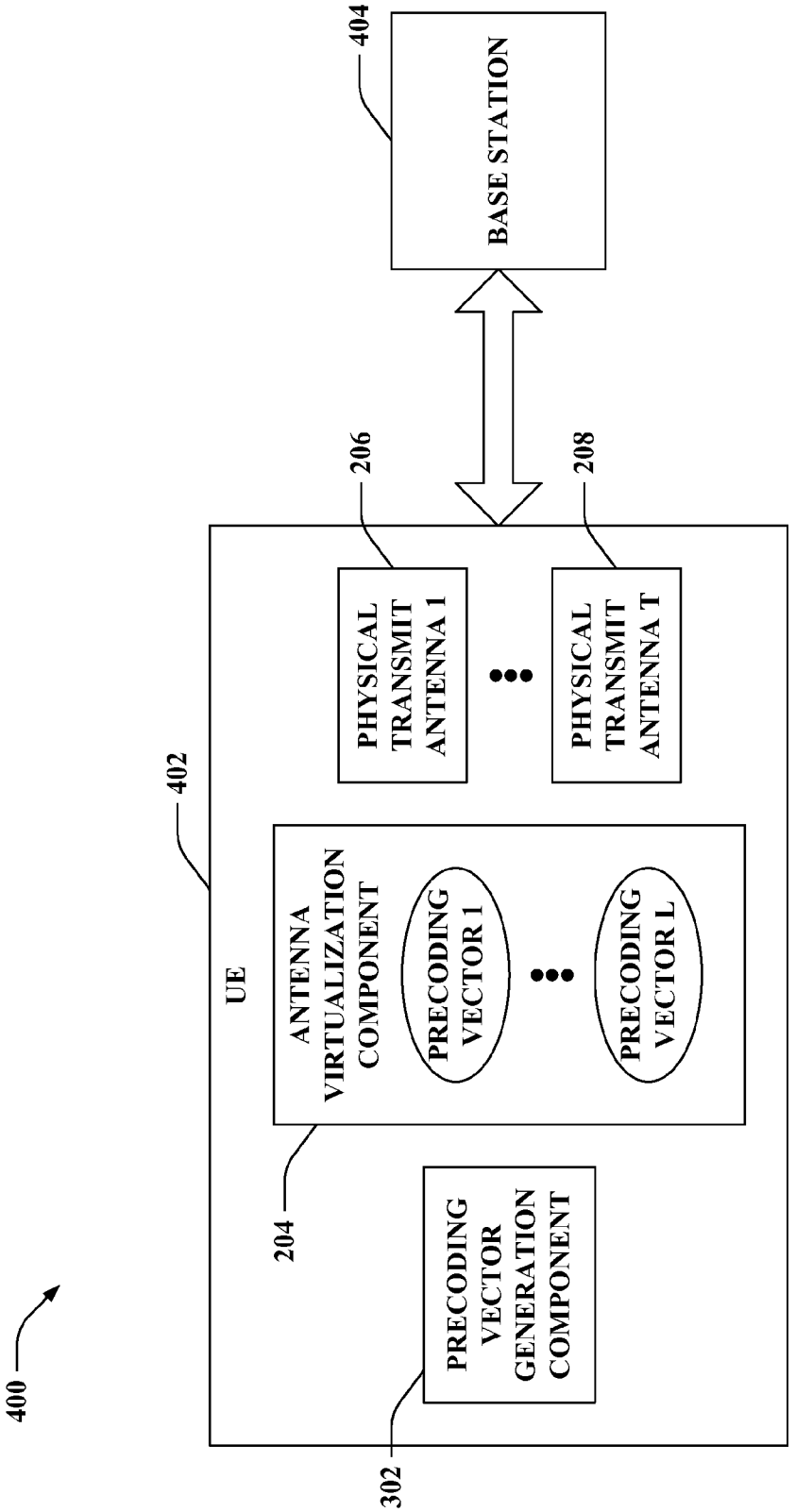
400
402
UE
404
BASE STATION
206
PHYSICAL TRANSMIT ANTENNA 1
208
PHYSICAL TRANSMIT ANTENNA T
204
ANTENNA VIRTUALIZATION COMPONENT
PRECODING VECTOR 1
PRECODING VECTOR L
302
PRECODING VECTOR GENERATION COMPONENT

FIG. 4

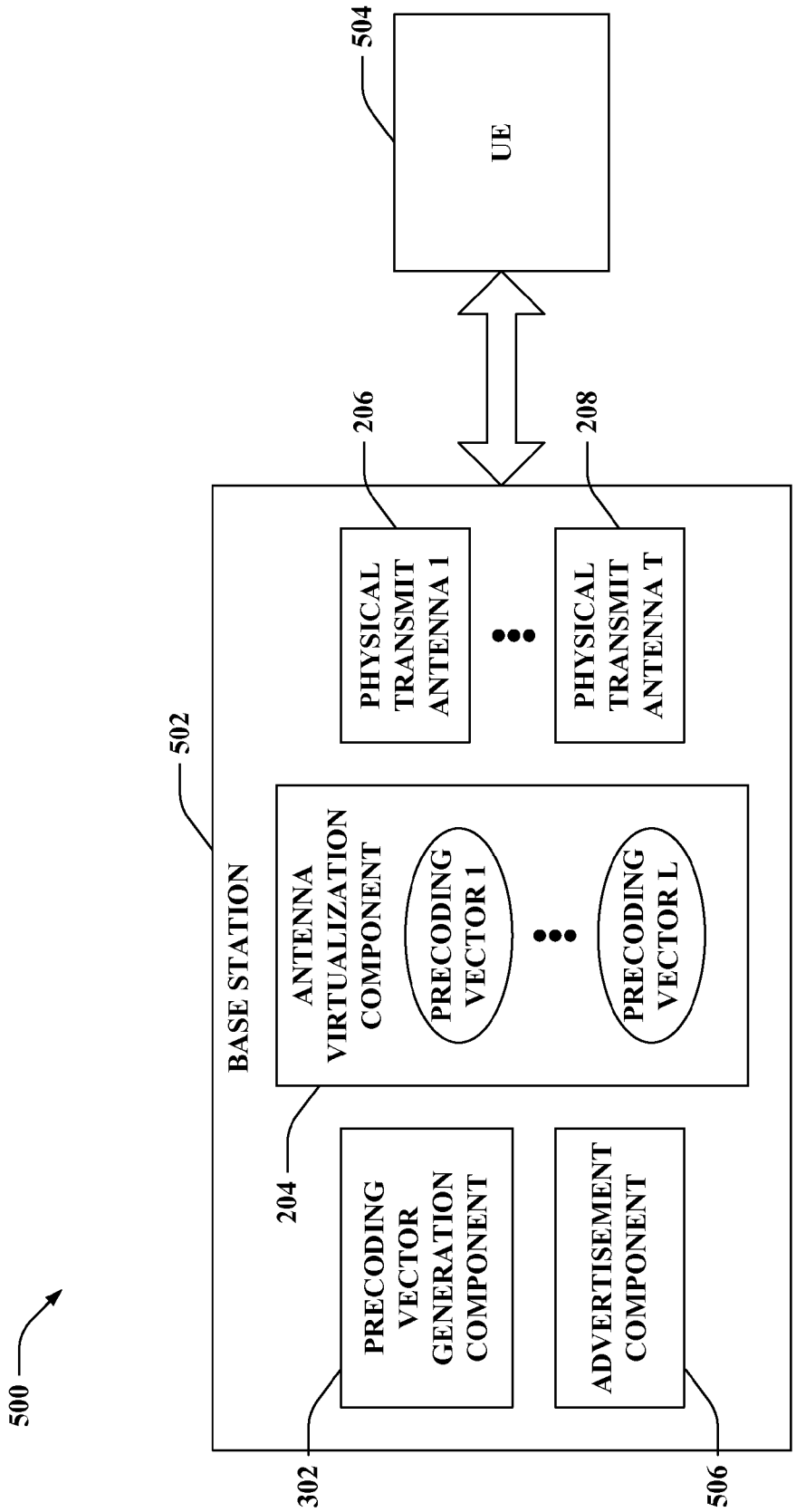
500
502
BASE STATION
204
ANTENNA VIRTUALIZATION COMPONENT
PRECODING VECTOR 1
PRECODING VECTOR L
PRECODING VECTOR GENERATION COMPONENT
ADVERTISEMENT COMPONENT
302
506
206
PHYSICAL TRANSMIT ANTENNA 1
208
PHYSICAL TRANSMIT ANTENNA T
504
UE

FIG. 5

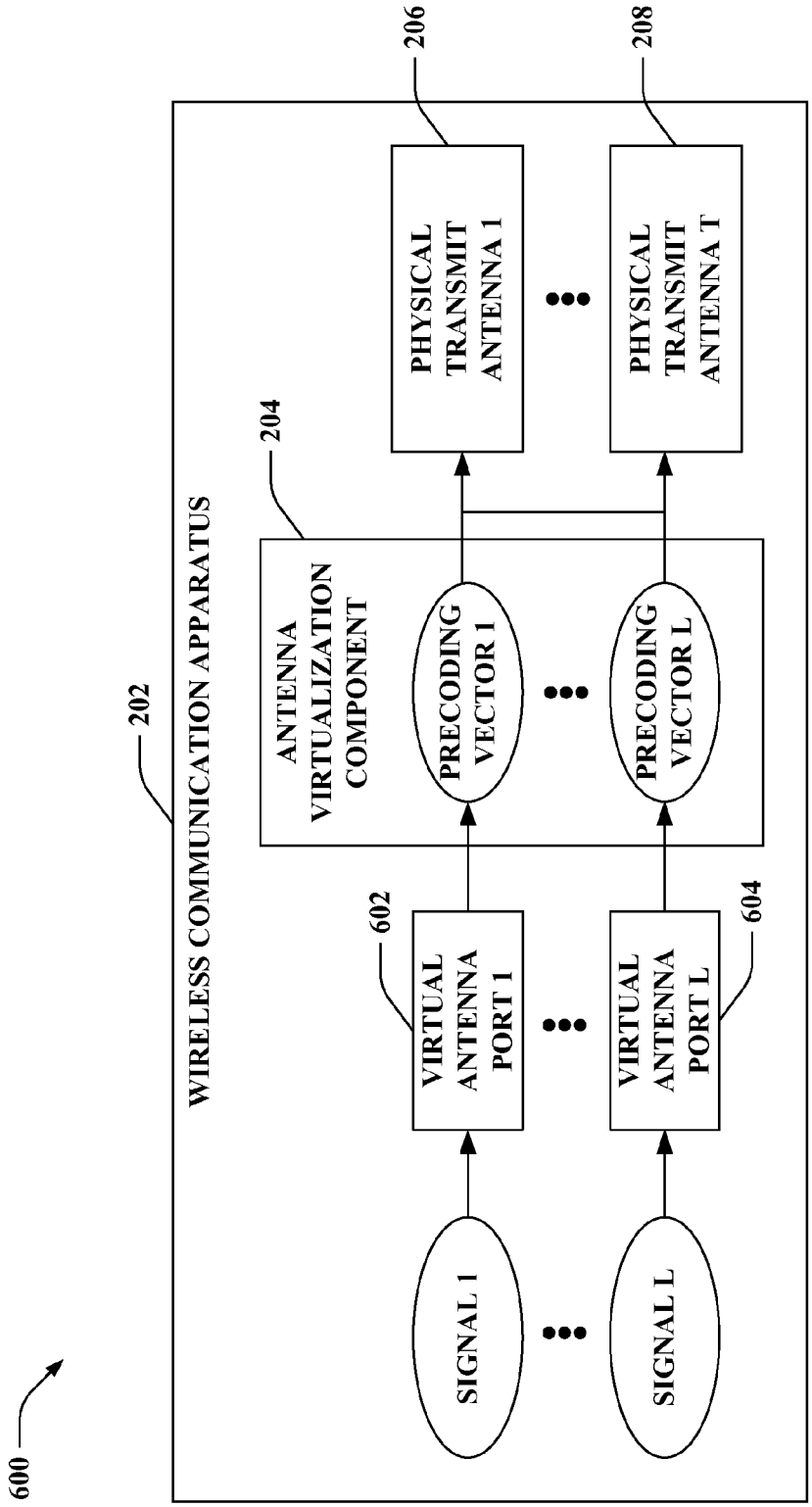
600
202
WIRELESS COMMUNICATION APPARATUS
204
ANTENNA VIRTUALIZATION COMPONENT
206
PHYSICAL TRANSMIT ANTENNA 1
208
PHYSICAL TRANSMIT ANTENNA T
PRECODING VECTOR 1
PRECODING VECTOR L
602
VIRTUAL ANTENNA PORT 1
604
VIRTUAL ANTENNA PORT L
SIGNAL 1
SIGNAL L

FIG. 6

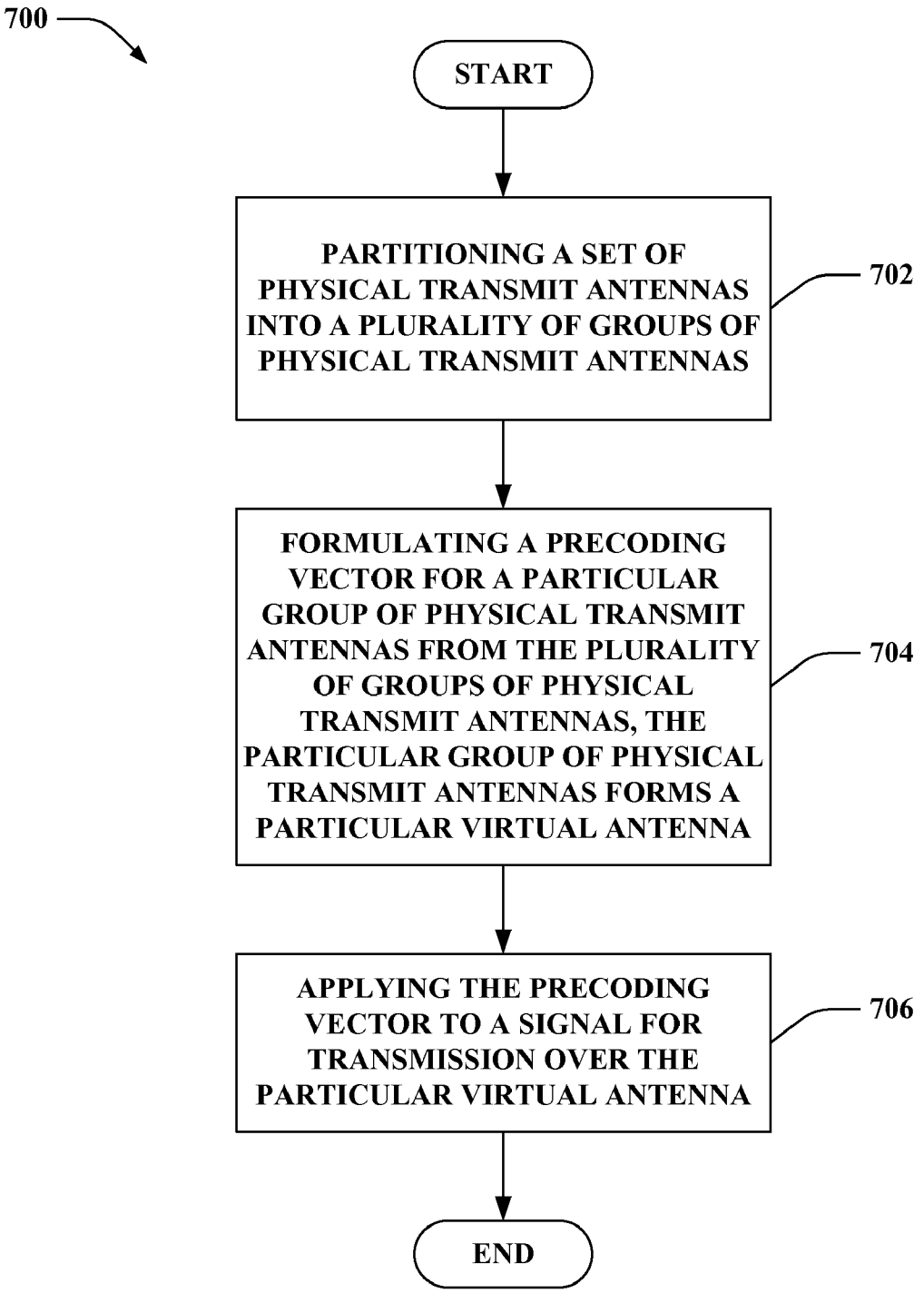
700
START
PARTITIONING A SET OF PHYSICAL TRANSMIT ANTENNAS INTO A PLURALITY OF GROUPS OF PHYSICAL TRANSMIT ANTENNAS
702
FORMULATING A PRECODING VECTOR FOR A PARTICULAR GROUP OF PHYSICAL TRANSMIT ANTENNAS FROM THE PLURALITY OF GROUPS OF PHYSICAL TRANSMIT ANTENNAS, THE PARTICULAR GROUP OF PHYSICAL TRANSMIT ANTENNAS FORMS A PARTICULAR VIRTUAL ANTENNA
704
APPLYING THE PRECODING VECTOR TO A SIGNAL FOR TRANSMISSION OVER THE PARTICULAR VIRTUAL ANTENNA
706
END

FIG. 7

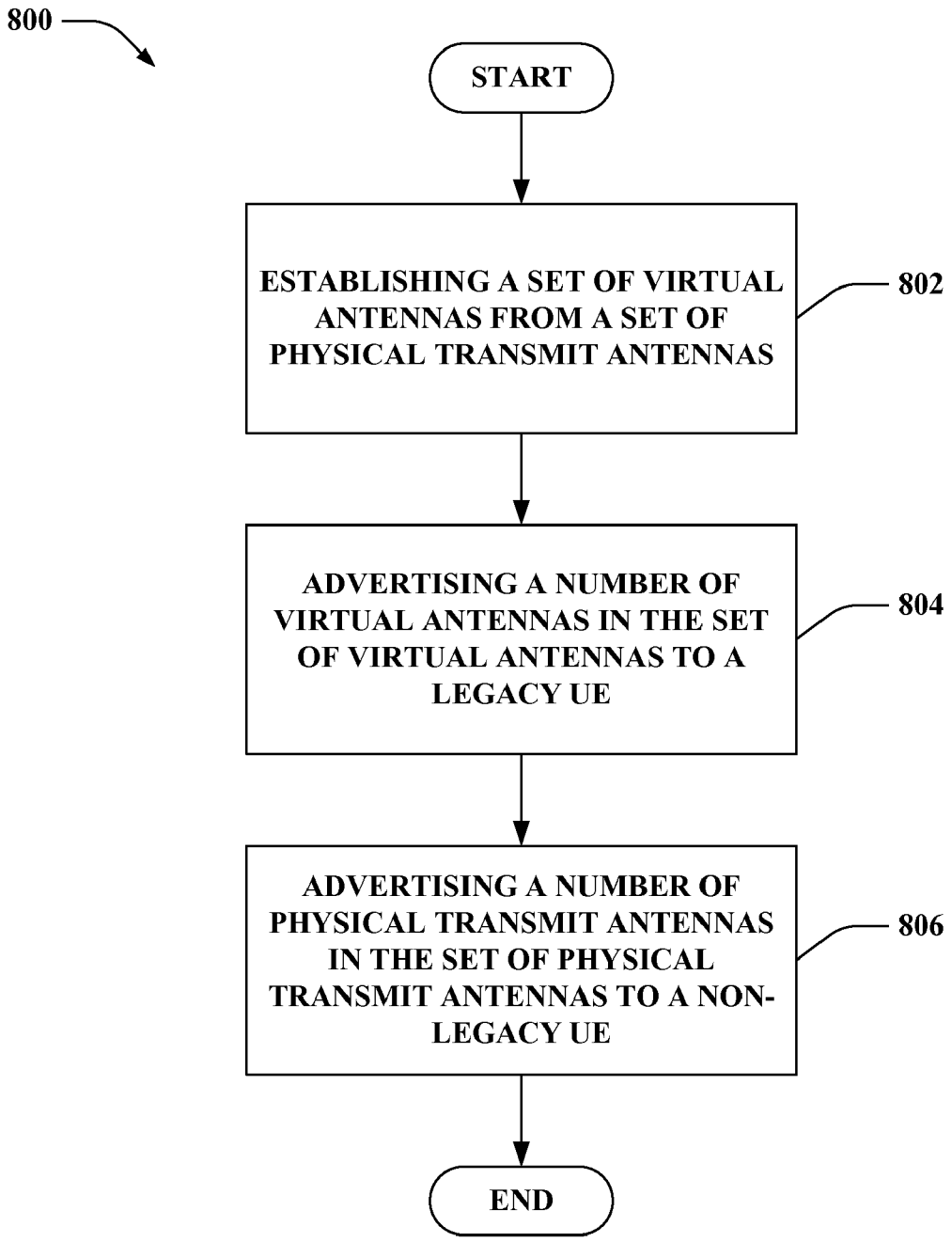
800
START
ESTABLISHING A SET OF VIRTUAL ANTENNAS FROM A SET OF PHYSICAL TRANSMIT ANTENNAS
802
ADVERTISING A NUMBER OF VIRTUAL ANTENNAS IN THE SET OF VIRTUAL ANTENNAS TO A LEGACY UE
804
ADVERTISING A NUMBER OF PHYSICAL TRANSMIT ANTENNAS IN THE SET OF PHYSICAL TRANSMIT ANTENNAS TO A NON-LEGACY UE
806
END

FIG. 8

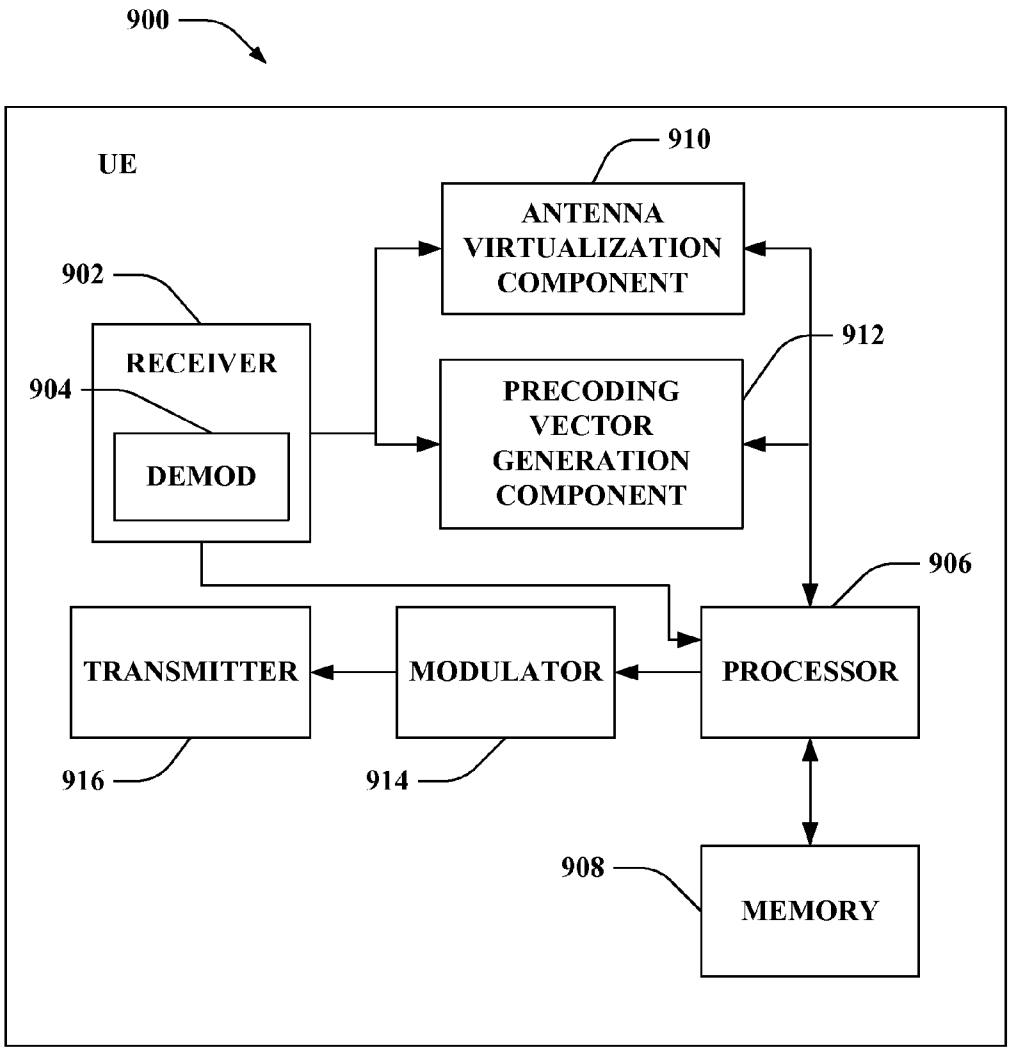
900
UE
910
ANTENNA VIRTUALIZATION COMPONENT
902
RECEIVER
904
DEMOD
912
PRECODING VECTOR GENERATION COMPONENT
906
TRANSMITTER
MODULATOR
PROCESSOR
916
914
908
MEMORY

FIG. 9

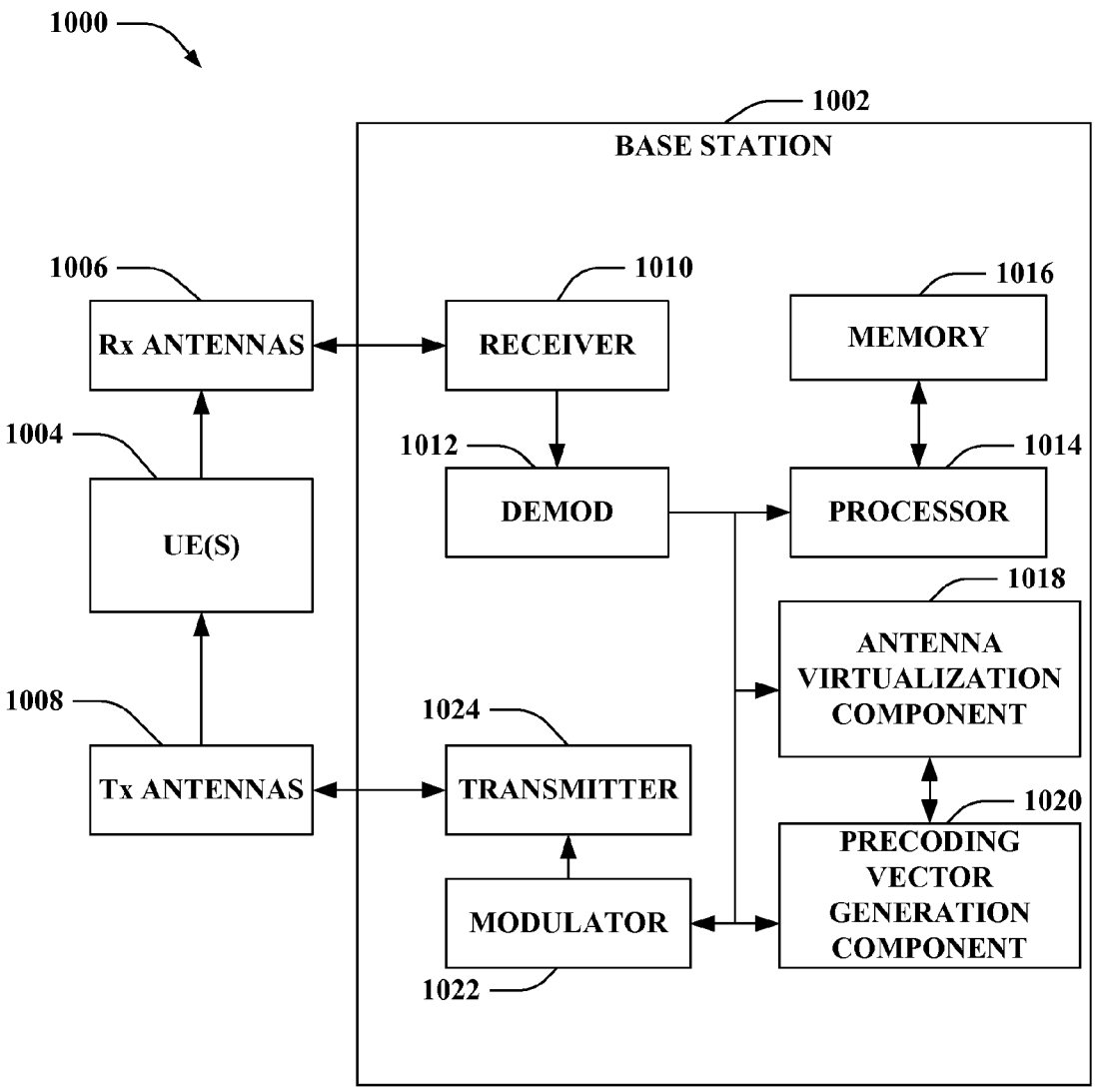
1000
1002
BASE STATION
1006
Rx ANTENNAS
1010
RECEIVER
1016
MEMORY
1004
UE(S)
1012
DEMOD
1014
PROCESSOR
1018
ANTENNA VIRTUALIZATION COMPONENT
1008
Tx ANTENNAS
1024
TRANSMITTER
1020
PRECODING VECTOR GENERATION COMPONENT
MODULATOR
1022

FIG. 10

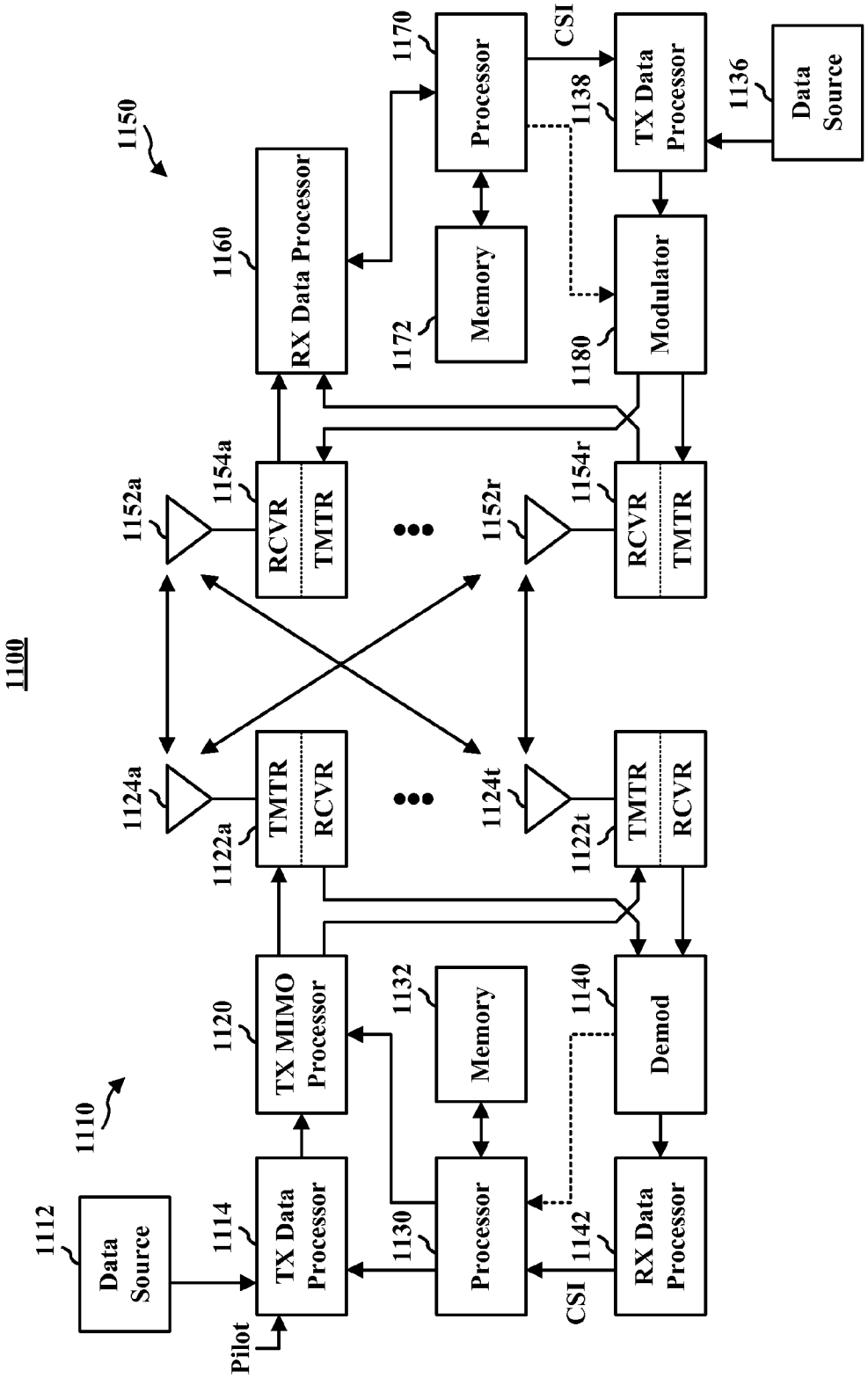
1100
1110
1112
Data Source
1114
TX Data Processor
Pilot
1120
TX MIMO Processor
1122a
TMTR
RCVR
1124a
1130
Processor
1132
Memory
1140
Demod
1142
RX Data Processor
CSI
1122t
TMTR
RCVR
1124t
1150
1152a
1154a
RCVR
TMTR
1152r
1154r
RCVR
TMTR
1160
RX Data Processor
1170
Processor
CSI
1172
Memory
1138
1180
Modulator
TX Data Processor
1136
Data Source

FIG. 11

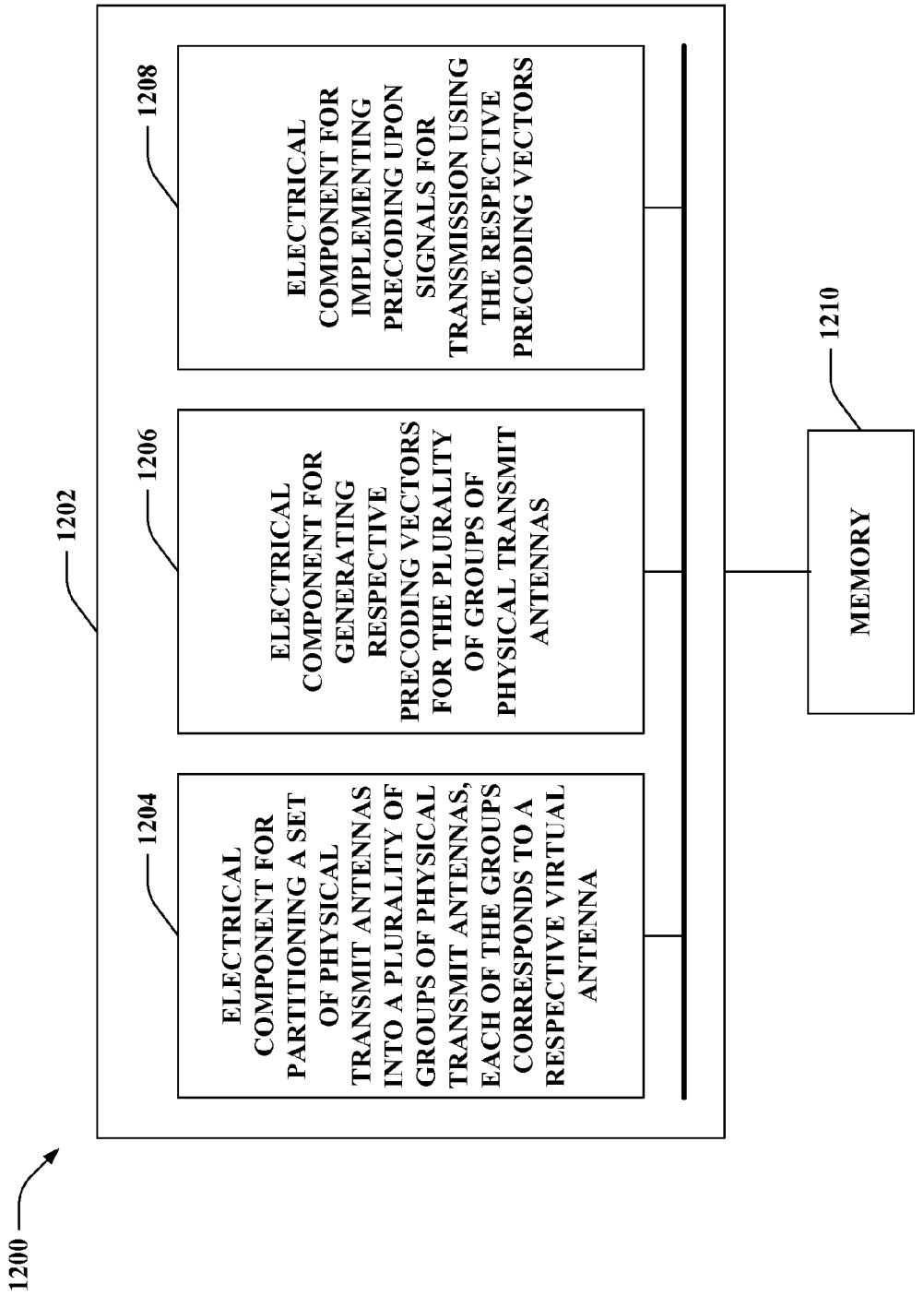
1200
1202
1204
ELECTRICAL COMPONENT FOR PARTITIONING A SET OF PHYSICAL TRANSMIT ANTENNAS INTO A PLURALITY OF GROUPS OF PHYSICAL TRANSMIT ANTENNAS, EACH OF THE GROUPS CORRESPONDS TO A RESPECTIVE VIRTUAL ANTENNA
1206
ELECTRICAL COMPONENT FOR GENERATING RESPECTIVE PRECODING VECTORS FOR THE PLURALITY OF GROUPS OF PHYSICAL TRANSMIT ANTENNAS
1208
ELECTRICAL COMPONENT FOR IMPLEMENTING PRECODING UPON SIGNALS FOR TRANSMISSION USING THE RESPECTIVE PRECODING VECTORS
1210
MEMORY

FIG. 12

# ANTENNA VIRTUALIZATION IN A WIRELESS COMMUNICATION ENVIRONMENT

## CROSS-REFERENCE TO RELATED APPLICATIONS

**[0001]** This application claims the benefit of U.S. Provisional Patent Application Ser. No. 61/149,325 entitled "A METHOD AND APPARATUS FOR MAPPING VIRTUAL ANTENNA'S IN A WIRELESS COMMUNICATION SYSTEM" which was filed Feb. 2, 2009. The entirety of the aforementioned application is herein incorporated by reference.

## BACKGROUND

**[0002]** I. Field

**[0003]** The following description relates generally to wireless communications, and more particularly to implementing antenna virtualization in a wireless communication system.

**[0004]** II. Background

**[0005]** Wireless communication systems are widely deployed to provide various types of communication; for instance, voice and/or data can be provided via such wireless communication systems. A typical wireless communication system, or network, can provide multiple users access to one or more shared resources (e.g., bandwidth, transmit power, . . . ). For instance, a system can use a variety of multiple access techniques such as Frequency Division Multiplexing (FDM), Time Division Multiplexing (TDM), Code Division Multiplexing (CDM), Orthogonal Frequency Division Multiplexing (OFDM), and others.

**[0006]** Generally, wireless multiple-access communication systems can simultaneously support communication for multiple user equipments (UEs). Each UE can communicate with one or more base stations via transmissions on forward and reverse links. The forward link (or downlink) refers to the communication link from base stations to UEs, and the reverse link (or uplink) refers to the communication link from UEs to base stations. This communication link can be established via a single-in-single-out, a multiple-in-single-out or a multiple-in-multiple-out (MIMO) system.

**[0007]** MIMO systems commonly employ multiple ($N_T$) transmit antennas and multiple ($N_R$) receive antennas for data transmission. A MIMO channel formed by the $N_T$ transmit and $N_R$ receive antennas can be decomposed into $N_S$ independent channels, which can be referred to as spatial channels, where $N_S \leqq \{N_T, N_R\}$. Each of the $N_S$ independent channels corresponds to a dimension. Moreover, MIMO systems can provide improved performance (e.g., increased spectral efficiency, higher throughput and/or greater reliability) if the additional dimensionalities created by the multiple transmit and receive antennas are utilized.

**[0008]** MIMO systems can support various duplexing techniques to divide forward and reverse link communications over a common physical medium. For instance, frequency division duplex (FDD) systems can utilize disparate frequency regions for forward and reverse link communications. Further, in time division duplex (TDD) systems, forward and reverse link communications can employ a common frequency region so that the reciprocity principle allows estimation of the forward link channel from the reverse link channel.

**[0009]** Wireless communication systems oftentimes employ one or more base stations that provide a coverage area. A typical base station can transmit multiple data streams for broadcast, multicast and/or unicast services, wherein a data stream may be a stream of data that can be of independent reception interest to a UE. A UE within the coverage area of such base station can be employed to receive one, more than one, or all the data streams carried by the composite stream. Likewise, a UE can transmit data to the base station or another UE.

**[0010]** A wireless communication apparatus (e.g., UE, base station, . . . ) can be equipped with a plurality of physical transmit antennas. Oftentimes, respective signals are provided to utilize the plurality of physical transmit antennas. Thus, for instance, four signals can be provided to employ four physical transmit antennas (e.g., each physical transmit antenna sends a respective one of the four signals, . . . ). However, significant overhead can result from the foregoing. Moreover, employment of a subset of the plurality of physical transmit antennas can result in inefficient utilization of the physical transmit antennas, power amplifiers (PAs) associated with the physical transmit antennas, and so forth. According to another illustration, a receiving wireless communication apparatus (e.g., UE, base station, . . . ) can be unable to receive and/or process the plurality of signals sent by the plurality of physical transmit antennas. Following this illustration, the number of physical transmit antennas with which the wireless communication apparatus is equipped can exceed a number of physical transmit antennas supported by the receiving wireless communication apparatus.

## SUMMARY

**[0011]** The following presents a simplified summary of one or more embodiments in order to provide a basic understanding of such embodiments. This summary is not an extensive overview of all contemplated embodiments, and is intended to neither identify key or critical elements of all embodiments nor delineate the scope of any or all embodiments. Its sole purpose is to present some concepts of one or more embodiments in a simplified form as a prelude to the more detailed description that is presented later.

**[0012]** In accordance with one or more embodiments and corresponding disclosure thereof, various aspects are described in connection with facilitating performance of antenna virtualization in a wireless communication environment. A set of physical transmit antennas can be partitioned into a plurality of groups of physical transmit antennas. Further, a precoding vector for a particular group of physical transmit antennas from the plurality of groups of physical transmit antennas can be formulated. Moreover, the particular group of physical transmit antennas can form a particular virtual antenna. By way of another example, a disparate precoding vector for a disparate group of physical transmit antennas from the plurality of groups of physical transmit antennas can be formulated, and the disparate group of physical transmit antennas can form a disparate virtual antenna. The precoding vector can be applied to a signal for transmission over the particular virtual antenna, and the disparate precoding vector can be applied to a disparate signal for transmission over the disparate virtual antenna.

**[0013]** According to related aspects, a method that facilitates implementing antenna virtualization in a wireless communication environment is described herein. The method can include partitioning a set of physical transmit antennas into a plurality of groups of physical transmit antennas. Further, the method can include formulating a precoding vector for a

particular group of physical transmit antennas from the plurality of groups of physical transmit antennas, the particular group of physical transmit antennas forms a particular virtual antenna. Moreover, the method can comprise applying the precoding vector to a signal for transmission over the particular virtual antenna.

**[0014]** Another aspect relates to a wireless communications apparatus. The wireless communications apparatus can include a memory that retains instructions related to partitioning a set of physical transmit antennas into a plurality of groups of physical transmit antennas, generating a precoding vector for a particular group of physical transmit antennas from the plurality of groups of physical transmit antennas, wherein the particular group of physical transmit antennas forms a particular virtual antenna, and applying the precoding vector to a signal for transmission over the particular virtual antenna. Further, the wireless communications apparatus can include a processor, coupled to the memory, configured to execute the instructions retained in the memory.

**[0015]** Yet another aspect relates to a wireless communications apparatus that enables effectuating antenna virtualization in a wireless communication environment. The wireless communications apparatus can include means for partitioning a set of physical transmit antennas into a plurality of groups of physical transmit antennas, each of the groups corresponds to a respective virtual antenna. Further, the wireless communications apparatus can comprise means for generating respective precoding vectors for the plurality of groups of physical transmit antennas. Moreover, the wireless communications apparatus can include means for implementing precoding upon signals for transmission using the respective precoding vectors.

**[0016]** Still another aspect relates to a computer program product that can comprise a computer-readable medium. The computer-readable medium can include code for partitioning a set of physical transmit antennas into a plurality of groups of physical transmit antennas, each of the groups corresponds to a respective virtual antenna. Moreover, the computer-readable medium can include code for generating respective precoding vectors for the plurality of groups of physical transmit antennas. Further, the computer-readable medium can include code for implementing precoding upon signals for transmission using the respective precoding vectors.

**[0017]** In accordance with another aspect, a wireless communications apparatus can include a processor, wherein the processor can be configured to partition a set of physical transmit antennas into a plurality of groups of physical transmit antennas. Moreover, the processor can be configured to formulate a precoding vector for a particular group of physical transmit antennas from the plurality of groups of physical transmit antennas, the particular group of physical transmit antennas forms a particular virtual antenna. Further, the processor can be configured to apply the precoding vector to a signal for transmission over the particular virtual antenna.

**[0018]** Toward the accomplishment of the foregoing and related ends, the one or more embodiments comprise the features hereinafter fully described and particularly pointed out in the claims. The following description and the annexed drawings set forth herein detail certain illustrative aspects of the one or more embodiments. These aspects are indicative, however, of but a few of the various ways in which the principles of various embodiments can be employed and the described embodiments are intended to include all such aspects and their equivalents.

## BRIEF DESCRIPTION OF THE DRAWINGS

**[0019]** FIG. **1** is an illustration of a wireless communication system in accordance with various aspects set forth herein.

**[0020]** FIG. **2** is an illustration of an example system that employs antenna virtualization in a wireless communication environment.

**[0021]** FIG. **3** is an illustration of an example system that formulates a precoding vector corresponding to a virtual antenna in a wireless communication environment.

**[0022]** FIG. **4** is an illustration of an example system that performs antenna virtualization at a UE in a wireless communication environment.

**[0023]** FIG. **5** is an illustration of example system that performs antenna virtualization at a base station in a wireless communication environment.

**[0024]** FIG. **6** is an illustration of an example system that employs virtual antenna ports for sending signals in a wireless communication environment.

**[0025]** FIG. **7** is an illustration of an example methodology that facilitates implementing antenna virtualization in a wireless communication environment.

**[0026]** FIG. **8** is an illustration of an example methodology that facilitates allowing for legacy compatible design by leveraging antenna virtualization in a wireless communication environment.

**[0027]** FIG. **9** is an illustration of an example UE that employs antenna virtualization in a wireless communication system.

**[0028]** FIG. **10** is an illustration of an example system that establishes and utilizes virtual antennas in a wireless communication environment.

**[0029]** FIG. **11** is an illustration of an example wireless network environment that can be employed in conjunction with the various systems and methods described herein.

**[0030]** FIG. **12** is an illustration of an example system that enables effectuating antenna virtualization in a wireless communication environment.

## DETAILED DESCRIPTION

**[0031]** Various embodiments are now described with reference to the drawings, wherein like reference numerals are used to refer to like elements throughout. In the following description, for purposes of explanation, numerous specific details are set forth in order to provide a thorough understanding of one or more embodiments. It may be evident, however, that such embodiment(s) may be practiced without these specific details. In other instances, well-known structures and devices are shown in block diagram form in order to facilitate describing one or more embodiments.

**[0032]** As used in this application, the terms "component," "module," "system," and the like are intended to refer to a computer-related entity, either hardware, firmware, a combination of hardware and software, software, or software in execution. For example, a component can be, but is not limited to being, a process running on a processor, a processor, an object, an executable, a thread of execution, a program, and/or a computer. By way of illustration, both an application running on a computing device and the computing device can be a component. One or more components can reside within a

process and/or thread of execution and a component can be localized on one computer and/or distributed between two or more computers. In addition, these components can execute from various computer readable media having various data structures stored thereon. The components can communicate by way of local and/or remote processes such as in accordance with a signal having one or more data packets (e.g., data from one component interacting with another component in a local system, distributed system, and/or across a network such as the Internet with other systems by way of the signal).

**[0033]** The techniques described herein can be used for various wireless communication systems such as code division multiple access (CDMA), time division multiple access (TDMA), frequency division multiple access (FDMA), orthogonal frequency division multiple access (OFDMA), single carrier-frequency division multiple access (SC-FDMA) and other systems. The terms "system" and "network" are often used interchangeably. A CDMA system can implement a radio technology such as Universal Terrestrial Radio Access (UTRA), CDMA2000, etc. UTRA includes Wideband-CDMA (W-CDMA) and other variants of CDMA. CDMA2000 covers IS-2000, IS-95 and IS-856 standards. A TDMA system can implement a radio technology such as Global System for Mobile Communications (GSM). An OFDMA system can implement a radio technology such as Evolved UTRA (E-UTRA), Ultra Mobile Broadband (UMB), IEEE 802.11 (Wi-Fi), IEEE 802.16 (WiMAX), IEEE 802.20, Flash-OFDM, etc. UTRA and E-UTRA are part of Universal Mobile Telecommunication System (UMTS). 3GPP Long Term Evolution (LTE) is an upcoming release of UMTS that uses E-UTRA, which employs OFDMA on the downlink and SC-FDMA on the uplink. UTRA, E-UTRA, UMTS, LTE and GSM are described in documents from an organization named "3rd Generation Partnership Project" (3GPP). Additionally, CDMA2000 and UMB are described in documents from an organization named "3rd Generation Partnership Project 2" (3GPP2). Further, such wireless communication systems can additionally include peer-to-peer (e.g., mobile-to-mobile) ad hoc network systems often using unpaired unlicensed spectrums, 802.xx wireless LAN, BLUETOOTH and any other short- or long- range, wireless communication techniques.

**[0034]** Single carrier frequency division multiple access (SC-FDMA) utilizes single carrier modulation and frequency domain equalization. SC-FDMA has similar performance and essentially the same overall complexity as those of an OFDMA system. A SC-FDMA signal has lower peak-to-average power ratio (PAPR) because of its inherent single carrier structure. SC-FDMA can be used, for instance, in uplink communications where lower PAPR greatly benefits UEs in terms of transmit power efficiency. Accordingly, SC-FDMA can be implemented as an uplink multiple access scheme in 3GPP Long Term Evolution (LTE) or Evolved UTRA.

**[0035]** Furthermore, various embodiments are described herein in connection with a user equipment (UE). A UE can also be called a system, subscriber unit, subscriber station, mobile station, mobile, remote station, remote terminal, mobile device, user terminal, terminal, wireless communication device, user agent, user device, or access terminal A UE can be a cellular telephone, a cordless telephone, a Session Initiation Protocol (SIP) phone, a wireless local loop (WLL) station, a personal digital assistant (PDA), a handheld device having wireless connection capability, computing device, or other processing device connected to a wireless modem. Moreover, various embodiments are described herein in connection with a base station. A base station can be utilized for communicating with UE(s) and can also be referred to as an access point, Node B, Evolved Node B (eNodeB, eNB) or some other terminology.

**[0036]** Moreover, the term "or" is intended to mean an inclusive "or" rather than an exclusive "or." That is, unless specified otherwise, or clear from the context, the phrase "X employs A or B" is intended to mean any of the natural inclusive permutations. That is, the phrase "X employs A or B" is satisfied by any of the following instances: X employs A; X employs B; or X employs both A and B. In addition, the articles "a" and "an" as used in this application and the appended claims should generally be construed to mean "one or more" unless specified otherwise or clear from the context to be directed to a singular form.

**[0037]** Various aspects or features described herein can be implemented as a method, apparatus, or article of manufacture using standard programming and/or engineering techniques. The term "article of manufacture" as used herein is intended to encompass a computer program accessible from any computer-readable device, carrier, or media. For example, computer-readable media can include but are not limited to magnetic storage devices (e.g., hard disk, floppy disk, magnetic strips, etc.), optical disks (e.g., compact disk (CD), digital versatile disk (DVD), etc.), smart cards, and flash memory devices (e.g., EPROM, card, stick, key drive, etc.). Additionally, various storage media described herein can represent one or more devices and/or other machine-readable media for storing information. The term "machine-readable medium" can include, without being limited to, wireless channels and various other media capable of storing, containing, and/or carrying instruction(s) and/or data.

**[0038]** Referring now to FIG. **1**, a system **100** is illustrated in accordance with various embodiments presented herein. System **100** comprises a base station **102** that can include multiple antenna groups. For example, one antenna group can include antennas **104** and **106**, another group can comprise antennas **108** and **110**, and an additional group can include antennas **112** and **114**. Two antennas are illustrated for each antenna group; however, more or fewer antennas can be utilized for each group. Base station **102** can additionally include a transmitter chain and a receiver chain, each of which can in turn comprise a plurality of components associated with signal transmission and reception (e.g., processors, modulators, multiplexers, demodulators, demultiplexers, antennas, etc.), as will be appreciated by one skilled in the art.

**[0039]** Base station **102** can communicate with one or more user equipments (UEs) such as UE **116** and UE **122**; however, it is to be appreciated that base station **102** can communicate with substantially any number of UEs similar to UEs **116** and **122**. UEs **116** and **122** can be, for example, cellular phones, smart phones, laptops, handheld communication devices, handheld computing devices, satellite radios, global positioning systems, PDAs, and/or any other suitable device for communicating over system **100**. As depicted, UE **116** is in communication with antennas **112** and **114**, where antennas **112** and **114** transmit information to UE **116** over a forward link **118** and receive information from UE **116** over a reverse link **120**. Moreover, UE **122** is in communication with antennas **104** and **106**, where antennas **104** and **106** transmit information to UE **122** over a forward link **124** and receive information from UE **122** over a reverse link **126**. In a frequency

division duplex (FDD) system, forward link **118** can utilize a different frequency band than that used by reverse link **120**, and forward link **124** can employ a different frequency band than that employed by reverse link **126**, for example. Further, in a time division duplex (TDD) system, forward link **118** and reverse link **120** can utilize a common frequency band and forward link **124** and reverse link **126** can utilize a common frequency band.

**[0040]** Each group of antennas and/or the area in which they are designated to communicate can be referred to as a sector of base station **102**. For example, antenna groups can be designed to communicate to UEs in a sector of the areas covered by base station **102**. In communication over forward links **118** and **124**, the transmitting antennas of base station **102** can utilize beamforming to improve signal-to-noise ratio of forward links **118** and **124** for UEs **116** and **122**. Also, while base station **102** utilizes beamforming to transmit to UEs **116** and **122** scattered randomly through an associated coverage, UEs in neighboring cells can be subject to less interference as compared to a base station transmitting through a single antenna to all its UEs.

**[0041]** According to an example, a UE (e.g., UE **116**, UE **122**, . . . ) can include multiple physical transmit antennas. Conventional UEs oftentimes include one physical transmit antenna; thus, such common UEs typically send a signal over the one physical transmit antenna. In contrast, UE **116** and/or UE **122** can include multiple physical transmit antennas (e.g., two, four, any integer greater than 1, . . . ). For instance, UE **116** and/or UE **122** can be Long Term Evolution—Advanced (LTE-A) UEs, which include the multiple physical transmit antennas.

**[0042]** UE **116** and/or UE **122** can create virtual antenna(s) by implementing precoding. Establishing virtual antenna(s) by applying precoding can enable utilizing power amplifiers (PAs) associated with the multiple physical transmit antennas efficiently while transmitting over the virtual antenna(s). By way of illustration, a UE (e.g., UE **116**, UE **122**, . . . ) can include two physical transmit antennas, each of which can be associated with a respective PA. If a virtual antenna is not established and the UE has one signal to send over one of the two physical transmit antennas, then one of the two PAs is utilized while the other PA remains unused; hence, resources of the UE are inefficiently employed. Instead, the UE can virtualize the two physical transmit antennas to be a single virtual antenna. Further, the UE can send one signal over the single virtual antenna, which leads to the signal being transmitted over the two physical transmit antennas using the two PAs associated therewith. Accordingly, resources of the UE can be more efficiently utilized as compared to conventional techniques that fail to leverage virtual antenna(s). Moreover, the two physical transmit antennas that form the virtual antenna can appear to be a single antenna from an offsite point of view (e.g., from a perspective of base station **102** which receives the signal from the UE, . . . ). It is to be appreciated, however, that the claimed subject matter is not limited to the aforementioned illustration.

**[0043]** By way of another example, base station **102** can include multiple physical transmit antennas. The number of physical transmit antennas of base station **102** can be larger than a number of antennas advertised to UE **116** and/or UE **122** (e.g., legacy UE(s), LTE-A UE(s), . . . ). Thus, base station **102** can implement antenna virtualization to benefit from full power utilization of PAs associated with the multiple physical transmit antennas and to allow for legacy compatible design.

**[0044]** As set forth herein, a wireless communication apparatus (e.g., base station **102**, UE **116**, UE **122**, . . . ) can establish virtual antenna(s) from a plurality of physical transmit antennas. Moreover, antenna virtualization can be transparent to a receiving wireless communication apparatus (e.g., UE **116**, UE **122**, base station **102**, . . . ); thus, the receiving wireless communication apparatus can be unaware of antenna virtualization being effectuated by the wireless communication apparatus, precoding performed by the wireless communication apparatus, and the like. For example, formation of virtual antenna(s) by base station **102** can be transparent to UE **116** and/or UE **122**. Similarly, for instance, establishment of virtual antenna(s) by a UE (e.g., UE **116**, UE **122**, . . . ) can be transparent to base station **102**.

**[0045]** By way of another example, antenna virtualization can be non-transparent. Thus, the wireless communication apparatus that forms the virtual antenna(s) can indicate that antenna virtualization is employed, specify precoding that is utilized, etc. to the receiving wireless communication apparatus. Additionally or alternatively, the receiving wireless communication apparatus can control virtualization details (e.g., via signaling, . . . ), and hence, can be aware of the virtualization details implemented by the wireless communication apparatus that forms the virtual antenna(s).

**[0046]** Now turning to FIG. **2**, illustrated is a system **200** that employs antenna virtualization in a wireless communication environment. System **200** includes a wireless communication apparatus **202** that transmits information, signals, data, instructions, commands, bits, symbols, and the like over a channel (e.g., uplink, downlink, . . . ) to a receiving wireless communication apparatus (not shown). Wireless communication apparatus **202**, for instance, can be a base station (e.g., base station **102** of FIG. **1**, . . . ), a UE (e.g., UE **116** of FIG. **1**, UE **122** of FIG. **1**, . . . ), or the like. Moreover, the receiving wireless communication apparatus can be, for example, a UE (e.g., UE **116** of FIG. **1**, UE **122** of FIG. **1**, . . . ), a base station (e.g., base station **102** of FIG. **1**, . . . ), etc.

**[0047]** Wireless communication apparatus **202** can further include an antenna virtualization component **204** and a plurality of physical transmit antennas. Wireless communication apparatus **202** can include T physical transmit antennas (e.g., a physical transmit antenna **1 206**, . . . , and a physical transmit antenna T **208**), where T can be substantially any integer greater than 1. The T physical transmit antennas, including physical transmit antenna **1 206**, . . . , and physical transmit antenna T **208**, is hereinafter referred to as physical transmit antennas **206-208**. Further, antenna virtualization component **204** can support a number of virtual antennas. For instance, the number of virtual antennas provided by antenna virtualization component **204** can be less than or equal to the number of physical transmit antennas **206-208** (e.g., the number of virtual antennas is an integer less than or equal to T, . . . ).

**[0048]** Antenna virtualization component **204** can implement precoding to efficiently utilize physical transmit antennas **206-208**, as well as PAs respectively associated with physical transmit antennas **206-208**. For example, antenna virtualization component **204** can employ a corresponding precoding vector for a virtual antenna supported thereby. Thus, if two virtual antennas are formed, then antenna virtualization component **204** can utilize two precoding vectors, where each of the virtual antennas is associated with a respective one of the precoding vectors; however, it is to be appreciated that the claimed subject matter is not so limited. A precoding vector can be used to formulate a virtual antenna

from a plurality of physical transmit antennas **206-208** (e.g., the set of physical transmit antennas **206-208**, a subset from the set of physical transmit antennas **206-208**, . . . ).

**[0049]** By way of example, wireless communication apparatus **202** can include two physical transmit antennas (e.g., physical transmit antenna **1 206** and physical transmit antenna T **208**, . . . ). Moreover, antenna virtualization component **204** can support one virtual antenna formed from the two physical transmit antennas, and thus, can employ one precoding vector. For instance, the precoding vector for the virtual antenna can be a 2-by-1 vector such as [$\alpha$ $\beta$]. Following this example, a signal, X, to be sent upon the virtual antenna can be received by antenna virtualization component **204**. Antenna virtualization component **204** can apply the precoding vector to the signal, X. Thus, antenna virtualization component **204** can multiply the signal, X, times $\alpha$ to yield a first output signal to be sent upon a first physical transmit antenna (e.g., physical transmit antenna **1 206**, . . . ). Moreover, antenna virtualization component **204** can multiply the signal, X, times $\beta$ to yield a second output signal to be sent upon a second physical transmit antenna (e.g., physical transmit antenna T **208**, . . . ). At a receiver side, a receiving wireless communication apparatus (not shown) can effectively see one transmit antenna after channel combining (e.g., if the receiving wireless communication apparatus has one receive antenna, . . . ). It is contemplated, however, that the claimed subject matter is not limited to the foregoing example.

**[0050]** With reference to FIG. **3**, illustrated is a system **300** that formulates a precoding vector corresponding to a virtual antenna in a wireless communication environment. System **300** includes wireless communication apparatus **202**, which can send signal(s) over a channel (e.g., uplink, downlink, . . . ). Wireless communication apparatus **202** can include antenna virtualization component **204** and a plurality of physical transmit antennas (e.g., physical transmit antenna **1 206**, . . . , and physical transmit antenna T **208**).

**[0051]** Wireless communication apparatus **202** can further include a precoding vector generation component **302** that can formulate a precoding vector for a virtual antenna. For example, precoding vector generation component **302** can select a number of virtual antennas to be formed from the T physical transmit antennas **206-208**. Moreover, precoding vector generation component **302** can generate a respective precoding vector for each virtual antenna to be formed.

**[0052]** According to an illustration where wireless communication apparatus **202** is a UE, virtualization details including the number of virtual antennas to be formed and the precoding vector for each virtual antenna can be initiated by the UE itself by precoding vector generation component **302**. Additionally or alternatively, such virtualization details can be semi-statically signaled by a base station and received by the UE (e.g., wireless communication apparatus **202**, . . . ). Thus, precoding vector generation component **302** (and/or antenna virtualization component **204**, . . . ) can collect received information specifying the number of virtual antennas to be formed and/or the precoding vector for each virtual antenna.

**[0053]** Pursuant to another illustration, wireless communication apparatus **202** can be a base station. Accordingly, the base station can employ precoding vector generation component **302** to yield the virtualization details including the number of virtual antennas to be formed and the precoding vector for each virtual antenna.

**[0054]** Although not shown, precoding vector(s) yielded, collected, etc. by precoding vector generation component **302** can be retained in memory of wireless communication apparatus **202**. Further, the precoding vector(s) can be retrieved by antenna virtualization component **204** when implementing precoding as described herein. Memory can store data to be transmitted, received data, and any other suitable information related to performing the various actions and functions set forth herein. It will be appreciated that the data store (e.g., memory, . . . ) described herein can be either volatile memory or nonvolatile memory, or can include both volatile and nonvolatile memory. By way of illustration, and not limitation, nonvolatile memory can include read only memory (ROM), programmable ROM (PROM), electrically programmable ROM (EPROM), electrically erasable PROM (EEPROM), or flash memory. Volatile memory can include random access memory (RAM), which acts as external cache memory. By way of illustration and not limitation, RAM is available in many forms such as synchronous RAM (SRAM), dynamic RAM (DRAM), synchronous DRAM (SDRAM), double data rate SDRAM (DDR SDRAM), enhanced SDRAM (ESDRAM), Synchlink DRAM (SLDRAM), and direct Rambus RAM (DRRAM). Memory of the subject systems and methods is intended to comprise, without being limited to, these and any other suitable types of memory.

**[0055]** Now turning to FIG. **4**, illustrated is a system **400** that performs antenna virtualization at a UE in a wireless communication environment. System **400** includes a UE **402** (e.g., wireless communication apparatus **202** of FIG. **2**, . . . ) and a base station **404** (e.g., a receiving wireless communication apparatus, . . . ). UE **402** can transmit and/or receive information, signals, data, instructions, commands, bits, symbols, and the like. UE **402** can communicate with base station **404** via the forward link and/or reverse link. Base station **404** can transmit and/or receive information, signals, data, instructions, commands, bits, symbols, and the like. Moreover, although not shown, it is contemplated that any number of UEs similar to UE **402** can be included in system **400** and/or any number of base stations similar to base station **404** can be included in system **400**.

**[0056]** UE **402** includes multiple physical transmit antennas (e.g., physical transmit antenna **1 206**, . . . , and physical transmit antennas T **208**). Further, UE **402** can include precoding vector generation component **302** and antenna virtualization component **204**. According to an example, virtual antenna(s) can be created by precoding vector generation component **302** by yielding precoding vector(s). For instance, L precoding vectors can be established by precoding vector generation component **302** (e.g., precoding vector **1**, . . . , and precoding vector L), where L can be substantially any integer less than or equal to T (e.g., where T is the number of physical transmit antennas **206-208**, . . . ). Although not shown, it is contemplated that one precoding vector can be created by precoding vector generation component **302**. The precoding vector(s) provided by precoding vector generation component **302** can enable utilizing PAs efficiently while transmitting over the virtual antenna(s).

**[0057]** According to an example, virtualization details including the number of virtual antennas to be formed and the precoding vector for each virtual antenna can be initiated by UE **402** itself via employing precoding vector generation component **302**. Additionally or alternatively, such virtualization details can be semi-statically signaled by base station **404** to UE **402**. Hence, precoding vector generation compo-

nent **302** (and/or antenna virtualization component **204**, . . . ) can collect received information specifying the number of virtual antennas to be formed and/or the precoding vector for each virtual antenna.

**[0058]** By way of a further example, details on the precoding to form virtual antenna(s) can be transparent to base station **404**. Thus, UE **402** can employ virtual antenna(s) by implementing precoding without indicating to base station **404** that such virtualization is being effectuated. However, it is also contemplated that antenna virtualization performed by UE **402** can be non-transparent to base station **404**, and thus, base station **404** can have knowledge of the antenna virtualization performed by UE **402**.

**[0059]** UE **402** can transmit information, signals, data, instructions, commands, bits, symbols, and the like over the uplink to base station **404**. The uplink waveform can be a Discrete Fourier Transform (DFT)-precoded OFDM waveform (e.g., a single carrier FDM (SC-FDM) waveform, . . . ). A single carrier waveform can have a lower peak-to-average power ratio compared to a multi-carrier waveform, which can result in higher efficiency of a PA. Thus, precoding vector generation component **302** can try to reduce a chance of generating a multi-carrier waveform at physical transmit antennas **206-208** as much as possible while forming the virtual antenna(s). Accordingly, precoding vector generation component **302** can adopt various rules as described herein for yielding antenna-selection based precoding vector(s).

**[0060]** Precoding vector generation component **302** can form group(s) from physical transmit antennas **206-208** as follows, where a group corresponds to a particular virtual antenna. Assume that precoding vector generation component **302** is to form L virtual antennas from T physical transmit antennas **206-208**. Thus, precoding vector generation component **302** can partition the T physical transmit antennas **206-208** into L groups. Group i determines physical transmit antenna(s) from the T physical transmit antennas **206-208** (e.g., a subset of the T physical transmit antennas **206-208**, . . . ) that are used to form a virtual antenna i, where i is an index and i=0, 1, . . . , L−1.

**[0061]** Moreover, precoding vector generation component **302** can formulate precoding vector(s) for the group(s). Precoding vector generation component **302** can yield a precoding vector in accordance with a particular group, where the precoding vector is a unit norm T-by-1 vector with non-zero entries corresponding to physical transmit antennas in the particular group that participate in forming a particular virtual antenna.

**[0062]** According to an example, assume that two virtual antennas (e.g., L=2, . . . ) are to be formed from four physical transmit antennas **206-208** (e.g., T=4, . . . ). The two virtual antennas can include virtual antenna **1** and virtual antenna **2**, and the four physical transmit antennas can include physical transmit antenna **1**, physical transmit antenna **2**, physical transmit antenna **3**, and physical transmit antennas **4**. Following this example, an example grouping that can be formed by precoding vector generation component **302** can be {{3, 4} {1, 2}}, where a first group corresponding to virtual antenna **1** includes physical transmit antenna **3** and physical transmit antenna **4**, and a second grouping corresponding to virtual antenna **2** includes physical transmit antenna **1** and physical transmit antenna **2**. Further, precoding vector generation component **302** can formulate a first precoding vector (e.g., precoding vector **1**, . . . ) for virtual antenna **1** such as: $[0\ 0\ e^{jD1}\ e^{jD2}]$/sqrt(2), and a second precoding vector (e.g., precoding vector **2**, . . . ) for virtual antenna **2** such as: $[e^{jD3}\ e^{jD4}\ 0\ 0]$/sqrt(2), where phase values can be different for different frequency tones (e.g., resources, . . . ) and/or can change in time. It is to be appreciated, however, that the claimed subject matter is not limited to the foregoing example.

**[0063]** By way of another example, two virtual antennas (e.g., L=2, . . . ) can be formed from four physical transmit antennas **206-208** (e.g., T=4, . . . ). Again, the two virtual antennas can include virtual antenna **1** and virtual antenna **2**, and the four physical transmit antennas can include physical transmit antenna **1**, physical transmit antenna **2**, physical transmit antenna **3**, and physical transmit antennas **4**. For instance, precoding vector generation component **302** can yield two precoding vectors, each with a size of T-by-1 (e.g., 4-by-1, . . . ). A precoding vector **1** for virtual antenna **1** formulated by precoding vector generation component **302** can be [α β γ δ], and a precoding vector **2** for virtual antennas **2** formulated by precoding vector generation component **302** can be [a b c d]. Moreover, a first signal, X, can be sent over virtual antenna **1**, which uses precoding vector **1**, [α β γ δ], while a second signal, Y, can be simultaneously sent over virtual antenna **1**, which uses precoding vector **2**, [a b c d]. Thus, antenna virtualization component **204** can implement precoding upon the first signal, X, and the second signal, Y, utilizing precoding vector **1** and precoding vector **2**. Accordingly, X times α plus Y times a can be sent over physical transmit antenna **1**, X times β plus Y times b can be sent over physical transmit antenna **2**, X times γ plus Y times c can be sent over physical transmit antenna **3**, and X times δ plus Y times d can be sent over physical transmit antenna **4**. To maintain the single carrier nature of the DFT-precoded OFDM waveform transmitted over the uplink by UE **402** to base station **404**, a or α is zero, β or b is zero, γ or c is zero, and δ or d is zero. Accordingly, each physical transmit antenna **206-208** can be used for one virtual antenna (e.g., virtual antenna **1** or virtual antenna **2** in the aforementioned example, . . . ) so that transmission of multiple signals over one physical transmit antenna can be avoided; hence, each physical transmit antenna **206-208** can transmit a single carrier waveform regardless whether different signals are simultaneously transmitted over different virtual antennas. It is to be appreciated, however, that the claimed subject matter is not limited to the foregoing example.

**[0064]** Precoding vector generation component **302** can cause a virtual antenna that is formed to occupy a subset of physical transmit antennas **206-208**. Over all physical transmit antenna(s), non-zero value(s) can be included at corresponding position(s) corresponding to the subset of physical transmit antenna(s) within a precoding vector formed for the virtual antenna. Moreover, for physical transmit antenna(s) that are not included in the subset, zero value(s) can be included at corresponding position(s) within the precoding vector formed for the virtual antenna.

**[0065]** Moreover, after virtual antennas have been formed, the virtual antennas can be considered to be physical transmit antennas from a point of view of data, a reference signal, and control. For instance, if UE **402** has four physical transmit antennas **206-208**, precoding vector generation component **302** can virtualize the four physical transmit antennas **206-208** into two virtual antennas. After effectuating the virtualization, UE **402** can be treated as having two transmit antennas (e.g., two virtual antennas, . . . ) even though it actually has four physical transmit antennas **206-208**. Further, base station **404** can view UE **402** as having two transmit antennas (e.g.,

two virtual antennas, . . . ), and different reference signals, control, data, etc. can be received from the two transmit antennas of UE **402**.

**[0066]** Referring to FIG. **5**, illustrated is a system **500** that performs antenna virtualization at a base station in a wireless communication environment. System **500** includes a base station **502** (e.g., wireless communication apparatus **202** of FIG. **2**, base station **404** of FIG. **4**, . . . ) and a UE **504** (e.g., a receiving wireless communication apparatus, UE **402** of FIG. **4**, . . . ). Base station **502** can transmit and/or receive information, signals, data, instructions, commands, bits, symbols, and the like. Base station **502** can communicate with UE **504** via the forward link and/or reverse link. UE **504** can transmit and/or receive information, signals, data, instructions, commands, bits, symbols, and the like. Moreover, although not shown, it is contemplated that any number of base stations similar to base station **502** can be included in system **500** and/or any number of UEs similar to UE **504** can be included in system **500**.

**[0067]** Base station **502** includes multiple physical transmit antennas (e.g., physical transmit antenna **1 206**, . . . , and physical transmit antennas T **208**). Further, base station **502** can include precoding vector generation component **302** and antenna virtualization component **204**. According to an example, virtual antenna(s) can be created by precoding vector generation component **302** by yielding precoding vector (s). For instance, L precoding vectors can be established by precoding vector generation component **302** (e.g., precoding vector **1**, . . . , and precoding vector L), where L can be substantially any integer less than or equal to T (e.g., where T is the number of physical transmit antennas **206-208**, . . . ). Although not shown, it is contemplated that one precoding vector can be created by precoding vector generation component **302**. The precoding vector(s) provided by precoding vector generation component **302** can enable utilizing PAs efficiently while transmitting over the virtual antenna(s), allowing base station **502** to benefit from full power utilization of the PAs.

**[0068]** Moreover, base station **502** can include an advertisement component **506** that can indicate a number of antennas to UE **504**. For instance, the indicated number of antennas can be a number of virtual antennas formed by precoding vector generation component **302** and/or utilized by antenna virtualization component **204**. A number of physical transmit antennas **206-208** included in base station **502** can be larger than a number of antennas advertised by advertisement component **506** to UE **504** (e.g., a legacy UE, a LTE-A UE, . . . ). For instance, in LTE Release 8, a maximum number of downlink physical transmit antennas can be four, while in LTE-A, a maximum number of downlink physical transmit antennas can be eight. Thus, if UE **504** is a legacy UE (e.g., LTE Release 8 UE, . . . ) operating in an LTE-A network where base station **502** includes eight physical transmit antennas **206-208** (e.g., T=8, . . . ), then advertisement component **506** can signal to UE **504** that base station **502** includes four transmit antennas (or fewer than four transmit antennas). Hence, antenna virtualization can support legacy UEs by providing for legacy compatible design. It is to be appreciated, however, that the claimed subject matter is not limited to the aforementioned illustration.

**[0069]** Further, legacy UE(s) and non-legacy UE(s) (e.g., LTE-A UE(s), . . . ) can coexist and operate in a common network. Antenna virtualization can be employed for legacy UE(s) (e.g., forming four or fewer virtual antennas from eight physical transmit antennas **206-208** of base station **502** for legacy UE(s), . . . ). According to an example, antenna virtualization can be employed for non-legacy UE(s) (e.g., forming four or fewer virtual antennas from eight physical transmit antennas **206-208** of base station **502** for non-legacy UE(s), . . . ). By way of another example, antenna virtualization need not be employed for non-legacy UE(s), while antenna virtualization is utilized for legacy UE(s). Thus, advertisement component **506** can indicate the number of physical transmit antennas **206-208** of base station **502** or the number of virtual antennas formulated by precoding vector generation component **302** and implemented by antenna virtualization component **204** to a non-legacy UE (e.g., UE **504**, . . . ). Following the above illustration where advertisement component **506** signals to a legacy UE that base station **502** includes four (or fewer) transmit antennas (e.g., four or fewer virtual antennas, . . . ) rather than eight physical transmit antennas **206-208**, advertisement component **506** can further signal to a non-legacy UE that base station **502** includes four (or fewer) transmit antennas (e.g., four or fewer virtual antennas, . . . ) or eight transmit antennas (e.g., eight physical transmit antennas **206-208**, . . . ).

**[0070]** Further, for a downlink scenario, virtualization can be transparent to UE **504**. Thus, UE **504** can lack knowledge of virtualization details employed by base station **502** such as, for instance, that virtualization is effectuated, precoding vector(s) employed, how precoding vector(s) are generated, and the like.

**[0071]** A waveform employed for the downlink can be an OFDM waveform. Thus, constraints utilized in connection with uplink antenna virtualization (as described in connection with FIG. **4**) need not be employed in system **500**. For instance, multiple signals can be transmitted simultaneously over a particular physical transmit antenna (e.g., from physical transmit antennas **206-208**, . . . ), and hence, the waveform need not be a single carrier waveform. However, it is to be appreciated that the claimed subject matter is not so limited.

**[0072]** Precoding vector generation component **302** can virtualize physical transmit antennas **206-208** as follows. For instance, a mapping from physical transmit antennas **206-208** to virtual antenna(s) can be any unit norm precoding vector. The precoding vector(s) can be designed such that a dimensionality of a virtual channel is not reduced beyond a number of desired virtual antenna(s). For example, precoding vector generation component **302** can partition physical transmit antennas **206-208** into groups, where each group corresponds to one virtual antenna. Precoding vector generation component **302** can yield a precoding vector for each group. For instance, a precoding vector for a particular group can be a unit norm vector with non-zero entries corresponding to physical transmit antennas in the particular group that participate in that virtual antenna. By way of another illustration, precoding vector generation component **302** can utilize fixed precoding vectors (e.g., different columns of a DFT matrix as precoding vectors for virtual antennas, . . . ).

**[0073]** Moreover, after virtual antennas have been formed, the virtual antennas can be considered to be physical transmit antennas from a point of view of data, a reference signal, and control. For instance, if base station **502** has four physical transmit antennas **206-208**, precoding vector generation component **302** can virtualize the four physical transmit antennas **206-208** into two virtual antennas. After effectuating the virtualization, base station **502** can be treated as having two transmit antennas (e.g., two virtual antennas, . . . )

even though it actually has four physical transmit antennas **206-208**. Further, UE **504** can view base station **502** as having two transmit antennas (e.g., two virtual antennas, . . . ), and different reference signals, control, data, etc. can be received from the two transmit antennas of base station **502**.

**[0074]** Now referring to FIG. **6**, illustrated is a system **600** that employs virtual antenna ports for sending signals in a wireless communication environment. System **600** includes wireless communication apparatus **202** (e.g., UE **402** of FIG. **4**, base station **502** of FIG. **5**, . . . ). Wireless communication apparatus **202** can further include antenna virtualization component **204** and multiple physical transmit antennas (e.g., physical transmit antenna **1 206**, . . . , and physical transmit antenna T **208**). Moreover, L virtual antennas can be formed from the multiple physical transmit antennas **206-208** (e.g., by precoding vector generation component **302** of FIG. **3**, . . . ). Thus, wireless communication apparatus **202** can include L virtual antenna ports (e.g., virtual antenna port **1 602**, . . . , and virtual antenna port L **604**), which can be used to send respective signals.

**[0075]** According to an illustration, wireless communication apparatus **202** can include four physical transmit antennas **206-208** (e.g., T=4, . . . ). Moreover, two virtual antennas (e.g., L=2, . . . ) can be formed from the four physical transmit antennas **206-208**. Thus, wireless communication apparatus **202** can include two virtual antenna ports **602-604**. Further, a first signal to be sent over a first virtual antenna can be provided to a first virtual antenna port (e.g., virtual antenna port **1 602**, . . . ) and a second signal to be sent over a second virtual antenna can be provided to a second virtual antenna port (e.g., virtual antenna port L **604**, . . . ). Antenna virtualization component **204** can apply a first precoding vector (e.g., precoding vector **1**, . . . ) to the first signal obtained by the first virtual antenna port and can apply a second precoding vector (e.g., precoding vector L, . . . ) to the second signal obtained by the second virtual antenna port. Accordingly, two signals can be sent over the four physical transmit antennas **206-208** following the aforementioned illustration (e.g., which can lead to reduced overhead since fewer reference signals need to be generated by wireless communication apparatus **202** for transmission, . . . ).

**[0076]** Moreover, precoding vectors described herein need not be constant over frequency. Virtualization can be a frequency dependent mapping to provide additional frequency diversity for frequency flat scenarios. Schemes like cyclic delay diversity (CDD) or frequency-dependent phase offset within each group are examples of frequency dependent mapping. Moreover, if wireless communication apparatus **202** is a base station (e.g., base station **502** of FIG. **5**, . . . ), then in order to provide a legacy UE (not shown) (e.g., UE **504** of FIG. **5**, . . . ) with reasonable channel estimation of the virtual antennas, the frequency dependent mapping can be smooth and may not change rapidly over frequency. Thus, to make a virtual antenna appear similar to a physical transmit antenna, a precoding vector can change smoothly over tones rather than arbitrarily changing over tones.

**[0077]** Referring to FIGS. **7-8**, methodologies relating to employing antenna virtualization in a wireless communication environment are illustrated. While, for purposes of simplicity of explanation, the methodologies are shown and described as a series of acts, it is to be understood and appreciated that the methodologies are not limited by the order of acts, as some acts can, in accordance with one or more embodiments, occur in different orders and/or concurrently with other acts from that shown and described herein. For example, those skilled in the art will understand and appreciate that a methodology could alternatively be represented as a series of interrelated states or events, such as in a state diagram. Moreover, not all illustrated acts can be required to implement a methodology in accordance with one or more embodiments.

**[0078]** With reference to FIG. **7**, illustrated is a methodology **700** that facilitates implementing antenna virtualization in a wireless communication environment. At **702**, a set of physical transmit antennas can be partitioned into a plurality of groups of physical transmit antennas. For example, the set of physical transmit antennas can include T physical transmit antennas, where T can be substantially any integer. Moreover, the set of T physical transmit antennas can be partitioned into L groups, where L can be substantially any integer less than or equal to T.

**[0079]** At **704**, a precoding vector can be formulated for a particular group of physical transmit antennas from the plurality of groups of physical transmit antennas. The particular group of physical transmit antennas can form a particular virtual antenna. Further, if the set of T physical transmit antennas are partitioned into L groups, then L precoding vectors can be formulated. Moreover, the L precoding vectors can correspond to L virtual antennas. According to an example, a disparate precoding vector for a disparate group of physical transmit antennas from the plurality of groups of physical transmit antennas can be formulated, wherein the disparate group of physical transmit antennas can form a disparate virtual antenna. At **706**, the precoding vector can be applied to a signal for transmission over the particular virtual antenna. Moreover, disparate precoding vector(s) corresponding to disparate virtual antenna(s) can be applied to disparate signal(s) for transmission over the disparate virtual antenna(s).

**[0080]** According to an example, the set of physical transmit antennas can be associated with a user equipment (UE), and the signal can be for transmission over an uplink to a base station. For instance, a number of virtual antennas to form can be selected (e.g., by the UE, . . . ), where the number of virtual antennas can be a number of the groups into which the set of physical transmit antennas is partitioned. Further, the precoding vector for the particular group (and/or disparate precoding vector(s) for disparate group(s)) can be chosen (e.g., by the UE, . . . ). By way of another illustration, an indication that specifies at least one of a number of virtual antennas to form (e.g., where the number of virtual antennas can be a number of the groups into which the set of physical transmit antennas is partitioned, . . . ) or the precoding vector for the particular group (and/or disparate precoding vector(s) for disparate group(s)) can be received from the base station. Moreover, information related to antenna virtualization can be transparent to the base station. Further, a waveform sent over the uplink can be a single carrier waveform (e.g., a Discrete Fourier Transform (DFT)-precoded orthogonal frequency division multiplexing (OFDM) waveform, . . . ). By way of another example, the precoding vector can be a unit norm vector of size T-by-1 with non-zero entries corresponding to physical transmit antennas in the particular group that forms the particular virtual antenna, where T is a number of physical transmit antennas in the set. Further, a remainder of entries in the T-by-1 unit norm vector (e.g., corresponding to physical transmit antennas not included in the particular group, corresponding to physical transmit antennas associated with a

differing virtual antenna, . . . ) can be zero. Moreover, non-zero entries in the precoding vector can be constant. Further, non-zero entries in the precoding vector can be frequency dependent and/or time dependent.

**[0081]** By way of another example, the set of physical transmit antennas can be associated with a base station, and the signal can be for transmission over a downlink to a user equipment (UE). For instance, information related to antenna virtualization can be transparent to the UE. Pursuant to an example, the precoding vector can be a unit norm vector. In accordance with another example, the precoding vector can be a unit norm vector with non-zero entries corresponding to physical transmit antennas in the particular group that participate in the particular virtual antenna. Yet another example relates to the precoding vector being a particular column of a Discrete Fourier Transform (DFT) matrix, where different column(s) of the DFT matrix are utilized for disparate virtual antenna(s). Moreover, non-zero entries in the precoding vector can be constant. Further, non-zero entries in the precoding vector can be frequency dependent and/or time dependent.

**[0082]** Turning to FIG. **8**, illustrated is a methodology **800** that facilitates allowing for legacy compatible design by leveraging antenna virtualization in a wireless communication environment. At **802**, a set of virtual antennas can be established from a set of physical transmit antennas. For instance, the set of virtual antennas can be established by a base station. Moreover, the set of physical transmit antennas associated with the base station can include a larger number of physical transmit antennas as compared to a maximum number of physical transmit antennas that can be employed by a legacy base station. By way of example, the set of physical transmit antennas associated with the base station can include eight physical transmit antennas, while a maximum number of physical transmit antennas that can be employed by the legacy base station can be four physical transmit antennas; however, it is to be appreciated that the claimed subject matter is not so limited. At **804**, a number of virtual antennas in the set of virtual antennas can be advertised to a legacy user equipment (UE). At **806**, a number of physical transmit antennas in the set of physical transmit antennas can be advertised to a non-legacy UE (e.g., Long Term Evolution—Advanced (LTE-A) UE, . . . ). Thus, virtualization can be employed for the legacy UE (e.g., when advertising the number of virtual antennas in the set of virtual antennas, . . . ), while virtualization need not be employed for the non-legacy UE. However, it is further contemplated that the number of virtual antennas in the set of virtual antennas can be advertised to the non-legacy UE and/or virtualization can be employed for the non-legacy UE.

**[0083]** It will be appreciated that, in accordance with one or more aspects described herein, inferences can be made pertaining to implementing antenna virtualization in a wireless communication environment. As used herein, the term to "infer" or "inference" refers generally to the process of reasoning about or inferring states of the system, environment, and/or user from a set of observations as captured via events and/or data. Inference can be employed to identify a specific context or action, or can generate a probability distribution over states, for example. The inference can be probabilistic—that is, the computation of a probability distribution over states of interest based on a consideration of data and events. Inference can also refer to techniques employed for composing higher-level events from a set of events and/or data. Such inference results in the construction of new events or actions from a set of observed events and/or stored event data, whether or not the events are correlated in close temporal proximity, and whether the events and data come from one or several event and data sources.

**[0084]** FIG. **9** is an illustration of a UE **900** that employs antenna virtualization in a wireless communication system. UE **900** comprises a receiver **902** that receives a signal from, for instance, a receive antenna (not shown), and performs typical actions thereon (e.g., filters, amplifies, downconverts, etc.) the received signal and digitizes the conditioned signal to obtain samples. Receiver **902** can be, for example, an MMSE receiver, and can comprise a demodulator **904** that can demodulate received symbols and provide them to a processor **906** for channel estimation. Processor **906** can be a processor dedicated to analyzing information received by receiver **902** and/or generating information for transmission by a transmitter **916**, a processor that controls one or more components of UE **900**, and/or a processor that both analyzes information received by receiver **902**, generates information for transmission by transmitter **916**, and controls one or more components of UE **900**.

**[0085]** UE **900** can additionally comprise memory **908** that is operatively coupled to processor **906** and that can store data to be transmitted, received data, and any other suitable information related to performing the various actions and functions set forth herein. Memory **908**, for instance, can store protocols and/or algorithms associated with partitioning a plurality of physical transmit antennas into multiple groups, formulating respective precoding vectors for the multiple groups, and the like. Moreover, memory **908** can maintain precoding vectors.

**[0086]** It will be appreciated that the data store (e.g., memory **908**) described herein can be either volatile memory or nonvolatile memory, or can include both volatile and nonvolatile memory. By way of illustration, and not limitation, nonvolatile memory can include read only memory (ROM), programmable ROM (PROM), electrically programmable ROM (EPROM), electrically erasable PROM (EEPROM), or flash memory. Volatile memory can include random access memory (RAM), which acts as external cache memory. By way of illustration and not limitation, RAM is available in many forms such as static RAM (SRAM), dynamic RAM (DRAM), synchronous DRAM (SDRAM), double data rate SDRAM (DDR SDRAM), enhanced SDRAM (ESDRAM), Synchlink DRAM (SLDRAM), and direct Rambus RAM (DRRAM). The memory **908** of the subject systems and methods is intended to comprise, without being limited to, these and any other suitable types of memory.

**[0087]** Processor **906** can be operatively coupled to an antenna virtualization component **910** and/or a precoding vector generation component **912**. Antenna virtualization component **910** can be substantially similar to antenna virtualization component **204** of FIG. **2** and/or precoding vector generation component **912** can be substantially similar to precoding vector generation component **302** of FIG. **3**. Precoding vector generation component **912** can yield precoding vector(s) associated with virtual antenna(s) formed from a plurality of physical transmit antennas (not shown) of UE **900**. Moreover, antenna virtualization component **910** can implement precoding (e.g., using the precoding vector(s) yielded by precoding vector generation component **912**, . . . ) to send signal(s) for transmission over the virtual antenna(s). UE **900** still further comprises a modulator **914** and a transmitter **916** that transmits data, signals, etc. to a base station.

Although depicted as being separate from the processor **906**, it is to be appreciated that antenna virtualization component **910**, precoding vector generation component **912**, and/or modulator **914** can be part of processor **906** or a number of processors (not shown).

**[0088]** FIG. **10** is an illustration of a system **1000** that establishes and utilizes virtual antennas in a wireless communication environment. System **1000** comprises a base station **1002** (e.g., access point, . . . ) with a receiver **1010** that receives signal(s) from one or more UEs **1004** through a plurality of receive antennas **1006**, and a transmitter **1024** that transmits to the one or more UEs **1004** through a plurality of transmit antennas **1008**. Receiver **1010** can receive information from receive antennas **1006** and is operatively associated with a demodulator **1012** that demodulates received information. Demodulated symbols are analyzed by a processor **1014** that can be similar to the processor described above with regard to FIG. **9**, and which is coupled to a memory **1016** that stores data to be transmitted to or received from UE(s) **1004** and/or any other suitable information related to performing the various actions and functions set forth herein. Processor **1014** is further coupled to an antenna virtualization component **1018** and/or a precoding vector generation component **1020**. Antenna virtualization component **1018** can be substantially similar to antenna virtualization component **204** of FIG. **2** and/or precoding vector generation component **1020** can be substantially similar to precoding vector generation component **302** of FIG. **3**. Precoding vector generation component **1020** can yield precoding vector(s) associated with virtual antenna(s) formed from the plurality of physical transmit antennas **1008** of base station **1002**. Moreover, antenna virtualization component **1018** can implement precoding (e.g., using the precoding vector(s) yielded by precoding vector generation component **1020**, . . . ) to send signal(s) for transmission over the virtual antenna(s). Although not shown, it is contemplated that base station **1002** can further include an advertisement component, which can be substantially similar to advertisement component **506** of FIG. **5**. Base station **1002** can further include a modulator **1022**. Modulator **1022** can multiplex a frame for transmission by a transmitter **1024** through antennas **1008** to UE(s) **1004** in accordance with the aforementioned description. Although depicted as being separate from the processor **1014**, it is to be appreciated that antenna virtualization component **1018**, precoding vector generation component **1020**, and/or modulator **1022** can be part of processor **1014** or a number of processors (not shown).

**[0089]** FIG. **11** shows an example wireless communication system **1100**. The wireless communication system **1100** depicts one base station **1110** and one UE **1150** for sake of brevity. However, it is to be appreciated that system **1100** can include more than one base station and/or more than one UE, wherein additional base stations and/or UEs can be substantially similar or different from example base station **1110** and UE **1150** described below. In addition, it is to be appreciated that base station **1110** and/or UE **1150** can employ the systems (FIGS. **1-6**, **9-10**, and **12**) and/or methods (FIGS. **7-8**) described herein to facilitate wireless communication there between.

**[0090]** At base station **1110**, traffic data for a number of data streams is provided from a data source **1112** to a transmit (TX) data processor **1114**. According to an example, each data stream can be transmitted over a respective antenna. TX data processor **1114** formats, codes, and interleaves the traffic data stream based on a particular coding scheme selected for that data stream to provide coded data.

**[0091]** The coded data for each data stream can be multiplexed with pilot data using orthogonal frequency division multiplexing (OFDM) techniques. Additionally or alternatively, the pilot symbols can be frequency division multiplexed (FDM), time division multiplexed (TDM), or code division multiplexed (CDM). The pilot data is typically a known data pattern that is processed in a known manner and can be used at UE **1150** to estimate channel response. The multiplexed pilot and coded data for each data stream can be modulated (e.g., symbol mapped) based on a particular modulation scheme (e.g., binary phase-shift keying (BPSK), quadrature phase-shift keying (QPSK), M-phase-shift keying (M-PSK), M-quadrature amplitude modulation (M-QAM), etc.) selected for that data stream to provide modulation symbols. The data rate, coding, and modulation for each data stream can be determined by instructions performed or provided by processor **1130**.

**[0092]** The modulation symbols for the data streams can be provided to a TX MIMO processor **1120**, which can further process the modulation symbols (e.g., for OFDM). TX MIMO processor **1120** then provides $N_T$ modulation symbol streams to $N_T$ transmitters (TMTR) **1122***a* through **1122***t*. In various embodiments, TX MIMO processor **1120** applies beamforming weights to the symbols of the data streams and to the antenna from which the symbol is being transmitted.

**[0093]** Each transmitter **1122** receives and processes a respective symbol stream to provide one or more analog signals, and further conditions (e.g., amplifies, filters, and upconverts) the analog signals to provide a modulated signal suitable for transmission over the MIMO channel. Further, $N_T$ modulated signals from transmitters **1122***a* through **1122***t* are transmitted from $N_T$ antennas **1124***a* through **1124***t*, respectively.

**[0094]** At UE **1150**, the transmitted modulated signals are received by $N_R$ antennas **1152***a* through **1152***r* and the received signal from each antenna **1152** is provided to a respective receiver (RCVR) **1154***a* through **1154***r*. Each receiver **1154** conditions (e.g., filters, amplifies, and downconverts) a respective signal, digitizes the conditioned signal to provide samples, and further processes the samples to provide a corresponding "received" symbol stream.

**[0095]** An RX data processor **1160** can receive and process the $N_R$ received symbol streams from $N_R$ receivers **1154** based on a particular receiver processing technique to provide $N_T$ "detected" symbol streams. RX data processor **1160** can demodulate, deinterleave, and decode each detected symbol stream to recover the traffic data for the data stream. The processing by RX data processor **1160** is complementary to that performed by TX MIMO processor **1120** and TX data processor **1114** at base station **1110**.

**[0096]** A processor **1170** can periodically determine which available technology to utilize as discussed above. Further, processor **1170** can formulate a reverse link message comprising a matrix index portion and a rank value portion.

**[0097]** The reverse link message can comprise various types of information regarding the communication link and/or the received data stream. The reverse link message can be processed by a TX data processor **1138**, which also receives traffic data for a number of data streams from a data source **1136**, modulated by a modulator **1180**, conditioned by transmitters **1154***a* through **1154***r*, and transmitted back to base station **1110**.

**[0098]** At base station **1110**, the modulated signals from UE **1150** are received by antennas **1124**, conditioned by receivers **1122**, demodulated by a demodulator **1140**, and processed by a RX data processor **1142** to extract the reverse link message transmitted by UE **1150**. Further, processor **1130** can process the extracted message to determine which precoding matrix to use for determining the beamforming weights.

**[0099]** Processors **1130** and **1170** can direct (e.g., control, coordinate, manage, etc.) operation at base station **1110** and UE **1150**, respectively. Respective processors **1130** and **1170** can be associated with memory **1132** and **1172** that store program codes and data. Processors **1130** and **1170** can also perform computations to derive frequency and impulse response estimates for the uplink and downlink, respectively.

**[0100]** In an aspect, logical channels are classified into Control Channels and Traffic Channels. Logical Control Channels can include a Broadcast Control Channel (BCCH), which is a DL channel for broadcasting system control information. Further, Logical Control Channels can include a Paging Control Channel (PCCH), which is a DL channel that transfers paging information. Moreover, the Logical Control Channels can comprise a Multicast Control Channel (MCCH), which is a Point-to-multipoint DL channel used for transmitting Multimedia Broadcast and Multicast Service (MBMS) scheduling and control information for one or several MTCHs. Generally, after establishing a Radio Resource Control (RRC) connection, this channel is only used by UEs that receive MBMS (e.g., old MCCH+MSCH). Additionally, the Logical Control Channels can include a Dedicated Control Channel (DCCH), which is a Point-to-point bi-directional channel that transmits dedicated control information and can be used by UEs having a RRC connection. In an aspect, the Logical Traffic Channels can comprise a Dedicated Traffic Channel (DTCH), which is a Point-to-point bi-directional channel dedicated to one UE for the transfer of user information. Also, the Logical Traffic Channels can include a Multicast Traffic Channel (MTCH) for Point-to-multipoint DL channel for transmitting traffic data.

**[0101]** In an aspect, Transport Channels are classified into DL and UL. DL Transport Channels comprise a Broadcast Channel (BCH), a Downlink Shared Data Channel (DL-SDCH) and a Paging Channel (PCH). The PCH can support UE power saving (e.g., Discontinuous Reception (DRX) cycle can be indicated by the network to the UE, . . . ) by being broadcasted over an entire cell and being mapped to Physical layer (PHY) resources that can be used for other control/traffic channels. The UL Transport Channels can comprise a Random Access Channel (RACH), a Request Channel (REQCH), a Uplink Shared Data Channel (UL-SDCH) and a plurality of PHY channels.

**[0102]** The PHY channels can include a set of DL channels and UL channels. For example, the DL PHY channels can include: Common Pilot Channel (CPICH); Synchronization Channel (SCH); Common Control Channel (CCCH); Shared DL Control Channel (SDCCH); Multicast Control Channel (MCCH); Shared UL Assignment Channel (SUACH); Acknowledgement Channel (ACKCH); DL Physical Shared Data Channel (DL-PSDCH); UL Power Control Channel (UPCCH); Paging Indicator Channel (PICH); and/or Load Indicator Channel (LICH). By way of further illustration, the UL PHY Channels can include: Physical Random Access Channel (PRACH); Channel Quality Indicator Channel (CQICH); Acknowledgement Channel (ACKCH); Antenna Subset Indicator Channel (ASICH); Shared Request Channel (SREQCH); UL Physical Shared Data Channel (UL-PSDCH); and/or Broadband Pilot Channel (BPICH).

**[0103]** It is to be understood that the embodiments described herein can be implemented in hardware, software, firmware, middleware, microcode, or any combination thereof. For a hardware implementation, the processing units can be implemented within one or more application specific integrated circuits (ASICs), digital signal processors (DSPs), digital signal processing devices (DSPDs), programmable logic devices (PLDs), field programmable gate arrays (FPGAs), processors, controllers, micro-controllers, microprocessors, other electronic units designed to perform the functions described herein, or a combination thereof.

**[0104]** When the embodiments are implemented in software, firmware, middleware or microcode, program code or code segments, they can be stored in a machine-readable medium, such as a storage component. A code segment can represent a procedure, a function, a subprogram, a program, a routine, a subroutine, a module, a software package, a class, or any combination of instructions, data structures, or program statements. A code segment can be coupled to another code segment or a hardware circuit by passing and/or receiving information, data, arguments, parameters, or memory contents. Information, arguments, parameters, data, etc. can be passed, forwarded, or transmitted using any suitable means including memory sharing, message passing, token passing, network transmission, etc.

**[0105]** For a software implementation, the techniques described herein can be implemented with modules (e.g., procedures, functions, and so on) that perform the functions described herein. The software codes can be stored in memory units and executed by processors. The memory unit can be implemented within the processor or external to the processor, in which case it can be communicatively coupled to the processor via various means as is known in the art.

**[0106]** With reference to FIG. **12**, illustrated is a system **1200** that enables effectuating antenna virtualization in a wireless communication environment. For example, system **1200** can reside within a UE. By way of another example, system **1200** can reside at least partially within a base station. It is to be appreciated that system **1200** is represented as including functional blocks, which can be functional blocks that represent functions implemented by a processor, software, or combination thereof (e.g., firmware). System **1200** includes a logical grouping **1202** of electrical components that can act in conjunction. For instance, logical grouping **1202** can include an electrical component for partitioning a set of physical transmit antennas into a plurality of groups of physical transmit antennas **1204**. Further, each of the groups can correspond to a respective virtual antenna. Moreover, logical grouping **1202** can include an electrical component for generating respective precoding vectors for the plurality of groups of physical transmit antennas **1206**. Further, logical grouping **1202** can include an electrical component for implementing precoding upon signals for transmission using the respective precoding vectors **1208**. Additionally, system **1200** can include a memory **1210** that retains instructions for executing functions associated with electrical components **1204**, **1206**, and **1208**. While shown as being external to memory **1210**, it is to be understood that one or more of electrical components **1204**, **1206**, and **1208** can exist within memory **1210**.

**[0107]** What has been described above includes examples of one or more embodiments. It is, of course, not possible to describe every conceivable combination of components or methodologies for purposes of describing the aforementioned embodiments, but one of ordinary skill in the art may recognize that many further combinations and permutations of various embodiments are possible. Accordingly, the described embodiments are intended to embrace all such alterations, modifications and variations that fall within the spirit and scope of the appended claims. Furthermore, to the extent that the term "includes" is used in either the detailed description or the claims, such term is intended to be inclusive in a manner similar to the term "comprising" as "comprising" is interpreted when employed as a transitional word in a claim.

What is claimed is:

**1**. A method that facilitates implementing antenna virtualization in a wireless communication environment, comprising:

partitioning a set of physical transmit antennas into a plurality of groups of physical transmit antennas;

formulating a precoding vector for a particular group of physical transmit antennas from the plurality of groups of physical transmit antennas, the particular group of physical transmit antennas forms a particular virtual antenna; and

applying the precoding vector to a signal for transmission over the particular virtual antenna.

**2**. The method of claim **1**, wherein the set of physical transmit antennas includes T physical transmit antennas, and the set of the T physical transmit antennas is partitioned into L groups of physical transmit antennas, wherein T is an integer and L is an integer less than or equal to T.

**3**. The method of claim **2**, wherein L precoding vectors corresponding to L virtual antennas are formulated.

**4**. The method of claim **1**, further comprising:

formulating a disparate precoding vector for a disparate group of physical transmit antennas from the plurality of groups of physical transmit antennas, the disparate group of physical transmit antennas forms a disparate virtual antenna; and

applying the disparate precoding vector to a disparate signal for transmission over the disparate virtual antenna.

**5**. The method of claim **1**, wherein the set of physical transmit antennas is associated with a user equipment (UE), and the signal is for transmission over an uplink to a base station.

**6**. The method of claim **5**, further comprising selecting a number of virtual antennas to form, wherein the number of virtual antennas is a number of the groups into which the set of physical transmit antennas is partitioned.

**7**. The method of claim **5**, further comprising choosing the precoding vector for the particular group.

**8**. The method of claim **5**, further comprising receiving an indication from the base station that specifies at least one of a number of virtual antennas to form or the precoding vector for the particular group.

**9**. The method of claim **5**, wherein information related to antenna virtualization is transparent to the base station.

**10**. The method of claim **5**, wherein the precoding vector is a unit norm vector of size T-by-1 with non-zero entries corresponding to physical transmit antennas in the particular group that forms the particular virtual antenna, wherein T is a number of physical transmit antennas in the set.

**11**. The method of claim **10**, wherein a remainder of entries in the precoding vector corresponding to physical transmit antennas associated with a differing virtual antenna are zero.

**12**. The method of claim **10**, wherein the non-zero entries in the precoding vector are constant.

**13**. The method of claim **10**, wherein the non-zero entries in the precoding vector are at least one of frequency dependent or time dependent.

**14**. The method of claim **1**, wherein the set of physical transmit antennas is associated with a base station, and the signal is for transmission over a downlink to a user equipment (UE).

**15**. The method of claim **14**, wherein information related to antenna virtualization is transparent to the UE.

**16**. The method of claim **14**, wherein the precoding vector is a unit norm vector.

**17**. The method of claim **14**, wherein the precoding vector is a unit norm vector with non-zero entries corresponding to physical transmit antennas in the particular group that participate in the particular virtual antenna.

**18**. The method of claim **14**, wherein the precoding vector is a particular column of a Discrete Fourier Transform (DFT) matrix, wherein a disparate column of the DFT matrix is utilized for a disparate virtual antenna.

**19**. The method of claim **14**, further comprising:

establishing a set of virtual antennas from the set of physical transmit antennas;

advertising a number of the virtual antennas in the set of virtual antennas to a legacy UE; and

advertising a number of physical transmit antennas in the set of physical transmit antennas to a non-legacy UE.

**20**. A wireless communications apparatus, comprising:

a memory that retains instructions related to partitioning a set of physical transmit antennas into a plurality of groups of physical transmit antennas, generating a precoding vector for a particular group of physical transmit antennas from the plurality of groups of physical transmit antennas, wherein the particular group of physical transmit antennas forms a particular virtual antenna, and applying the precoding vector to a signal for transmission over the particular virtual antenna; and

a processor, coupled to the memory, configured to execute the instructions retained in the memory.

**21**. The wireless communications apparatus of claim **20**, wherein information related to antenna virtualization is transparent to a receiving wireless communication apparatus.

**22**. The wireless communications apparatus of claim **20**, wherein the set of physical transmit antennas is associated with a user equipment (UE), and the signal is for transmission over an uplink to a base station.

**23**. The wireless communications apparatus of claim **22**, wherein the memory further retains instructions related to selecting a number of virtual antennas to form, wherein the number of virtual antennas is a number of the groups into which the set of physical transmit antennas is partitioned, and selecting the precoding vector for the particular group.

**24**. The wireless communications apparatus of claim **22**, wherein the memory further retains instructions related to receiving an indication from the base station that specifies at least one of a number of virtual antennas to form, wherein the number of virtual antennas is a number of the groups into which the set of physical transmit antennas is partitioned, or the precoding vector for the particular group.

**25**. The wireless communications apparatus of claim **22**, wherein the precoding vector is a unit norm vector of size T-by-1 with non-zero entries corresponding to physical transmit antennas in the particular group that forms the particular virtual antenna, wherein T is a number of physical transmit antennas in the set and a remainder of entries in the precoding vector are zero.

**26**. The wireless communications apparatus of claim **20**, wherein the set of physical transmit antennas is associated with a base station, and the signal is for transmission over a downlink to a user equipment (UE).

**27**. The wireless communications apparatus of claim **26**, wherein the precoding vector is a unit norm vector with non-zero entries corresponding to physical transmit antennas in the particular group that participate in the particular virtual antenna.

**28**. The wireless communications apparatus of claim **27**, wherein the non-zero entries in the precoding vector are constant.

**29**. The wireless communications apparatus of claim **27**, wherein the non-zero entries in the precoding vector are at least one of frequency dependent or time dependent.

**30**. The wireless communications apparatus of claim **26**, wherein the precoding vector is a particular column of a Discrete Fourier Transform (DFT) matrix, wherein a disparate column of the DFT matrix is utilized for a disparate virtual antenna.

**31**. The wireless communications apparatus of claim **26**, wherein the memory further retains instructions related to advertising a number of virtual antennas corresponding to a number of the groups to a legacy UE, and advertising a number of physical transmit antennas in the set of physical transmit antennas to a non-legacy UE.

**32**. A wireless communications apparatus that enables effectuating antenna virtualization in a wireless communication environment, comprising:

means for partitioning a set of physical transmit antennas into a plurality of groups of physical transmit antennas, each of the groups corresponds to a respective virtual antenna;

means for generating respective precoding vectors for the plurality of groups of physical transmit antennas; and

means for implementing precoding upon signals for transmission using the respective precoding vectors.

**33**. The wireless communications apparatus of claim **32**, wherein the respective precoding vectors are respective unit norm vectors of size T-by-1 with non-zero entries corresponding to physical transmit antennas that respectively form each respective virtual antenna, wherein T is a number of physical transmit antennas in the set.

**34**. The wireless communications apparatus of claim **32**, wherein the respective precoding vectors are respective unit norm vectors.

**35**. The wireless communications apparatus of claim **32**, wherein the respective precoding vectors are respective columns of a Discrete Fourier Transform (DFT) matrix.

**36**. The wireless communications apparatus of claim **32**, wherein information related to antenna virtualization is transparent to a receiving wireless communication apparatus.

**37**. A computer program product, comprising:

a computer-readable medium comprising:

code for partitioning a set of physical transmit antennas into a plurality of groups of physical transmit antennas, each of the groups corresponds to a respective virtual antenna;

code for generating respective precoding vectors for the plurality of groups of physical transmit antennas; and

code for implementing precoding upon signals for transmission using the respective precoding vectors.

**38**. The computer program product of claim **37**, wherein the respective precoding vectors are respective unit norm vectors of size T-by-1 with non-zero entries corresponding to physical transmit antennas that respectively form each respective virtual antenna, wherein T is a number of physical transmit antennas in the set.

**39**. The computer program product of claim **37**, wherein the respective precoding vectors are respective columns of a Discrete Fourier Transform (DFT) matrix.

**40**. The computer program product of claim **37**, wherein information related to antenna virtualization is transparent to a receiving wireless communication apparatus.

**41**. A wireless communications apparatus, comprising:

a processor configured to:

partition a set of physical transmit antennas into a plurality of groups of physical transmit antennas;

formulate a precoding vector for a particular group of physical transmit antennas from the plurality of groups of physical transmit antennas, the particular group of physical transmit antennas forms a particular virtual antenna; and

apply the precoding vector to a signal for transmission over the particular virtual antenna.

* * * * *