US 20110038330A1

(19) United States

(12) Patent Application Publication

(10) Pub. No.: US 2011/0038330 A1

(43) Pub. Date: Feb. 17, 2011

Luo et al.

(54) **ROBUST DECODING OF COMP TRANSMISSIONS**

(75) Inventors: **Tao Luo**, San Diego, CA (US); **Durga Prasad Malladi**, San Diego, CA (US); **Juan Montojo**, San Diego, CA (US); **Ke Liu**, San Diego, CA (US); **Xiaoxia Zhang**, San Diego, CA (US); **Yongbin Wei**, San Diego, CA (US)

Correspondence Address:
QUALCOMM INCORPORATED
5775 MOREHOUSE DR.
SAN DIEGO, CA 92121 (US)

(73) Assignee: **QUALCOMM INCORPORATED**, San Diego, CA (US)

(21) Appl. No.: **12/846,640**

(22) Filed: **Jul. 29, 2010**

Related U.S. Application Data

(60) Provisional application No. 61/230,068, filed on Jul. 30, 2009.

Publication Classification

(51) **Int. Cl.**
H04W 72/04 (2009.01)
H04W 4/00 (2009.01)

(52) **U.S. Cl.** **370/329**; 370/328

(57) **ABSTRACT**

Techniques for transmitting data and resource signals (RS) are provided. According to certain aspects, an access point may determine RS resource locations related to one or more access points in a CoMP set transmitting a common reference signal (CRS), map data transmissions initially over resources other than those related to the RS resource locations, and map remaining data transmissions over resources related to the RS resource locations. According to certain aspects, a wireless device may receive a signal from access points in a coordinated multiple point (CoMP) communication set comprising a common reference signal (CRS) superimposed over data, determine CRS locations in the signal that correspond to the CRS, and decode data from the signal based at least in part on the determined CRS locations.

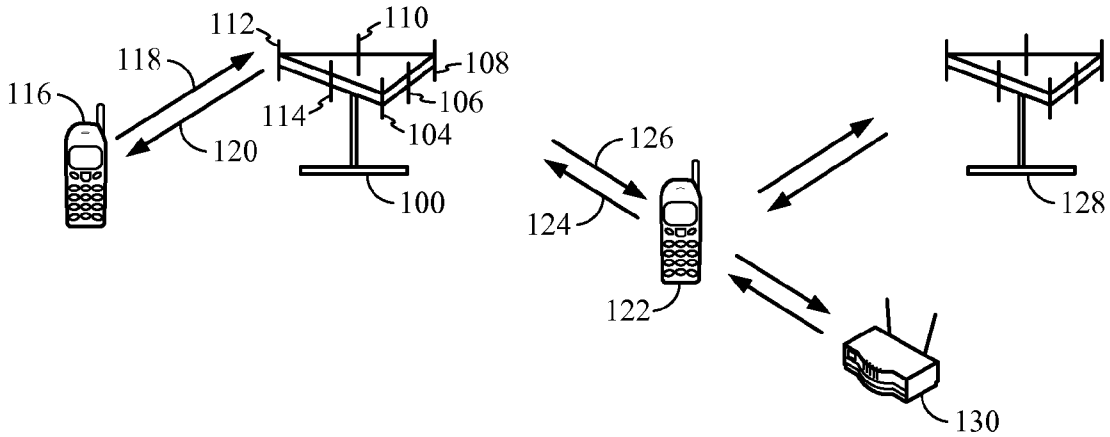

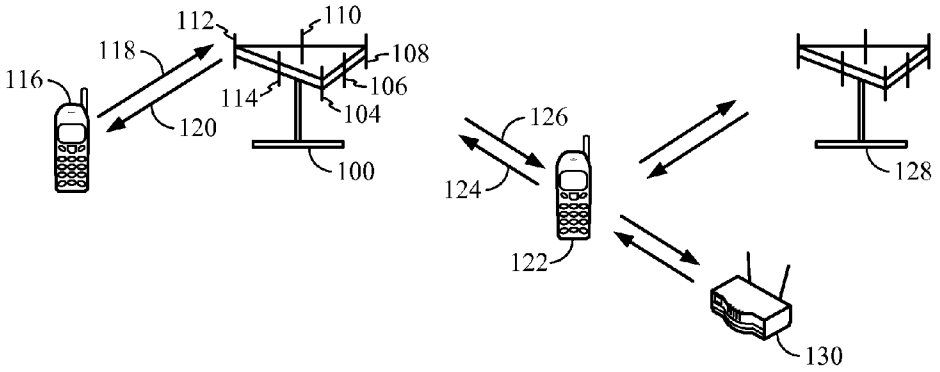
112
110
118
108
116
106
114
104
120
100
126
124
128
122
130

FIG. 1

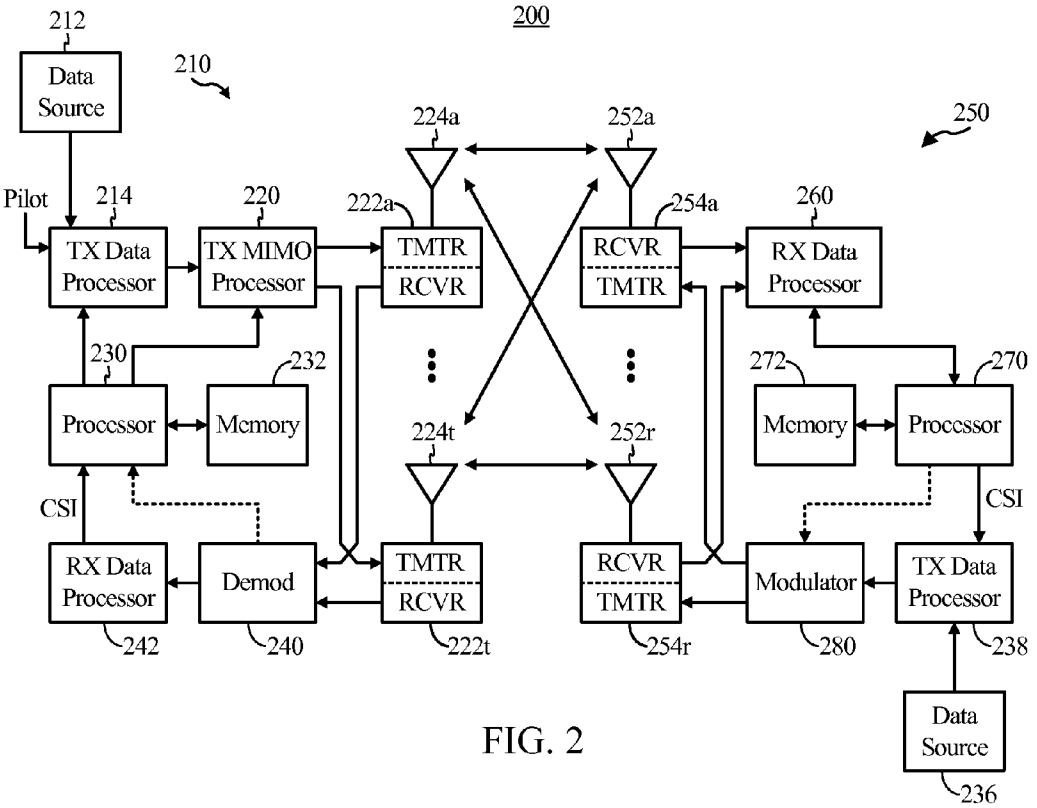
200
212
Data Source
210
224a
252a
250
Pilot
214
220
222a
254a
260
TX Data Processor
TX MIMO Processor
TMTR
RCVR
RCVR
TMTR
RX Data Processor
230
232
272
270
Processor
Memory
224t
252r
Memory
Processor
CSI
CSI
RX Data Processor
Demod
TMTR
RCVR
RCVR
TMTR
Modulator
TX Data Processor
242
240
222t
254r
280
238
Data Source
236

FIG. 2

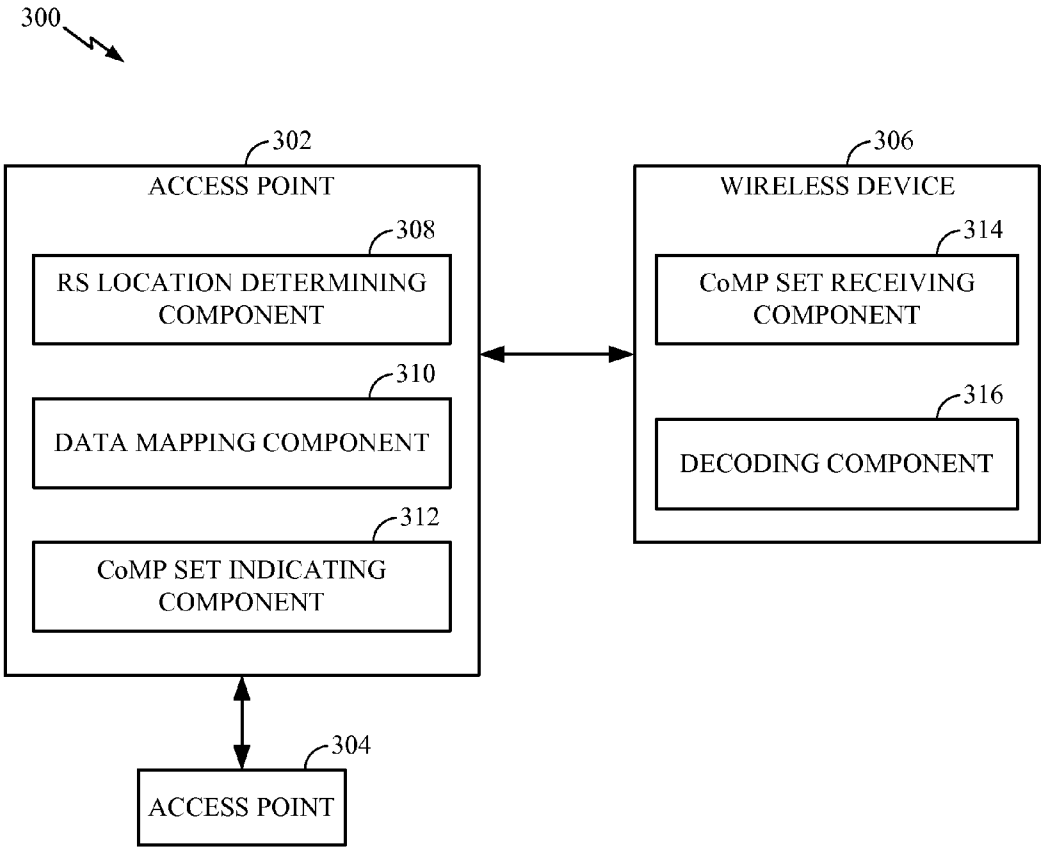
300
302
ACCESS POINT
308
RS LOCATION DETERMINING COMPONENT
310
DATA MAPPING COMPONENT
312
CoMP SET INDICATING COMPONENT
306
WIRELESS DEVICE
314
CoMP SET RECEIVING COMPONENT
316
DECODING COMPONENT
304
ACCESS POINT

FIG. 3

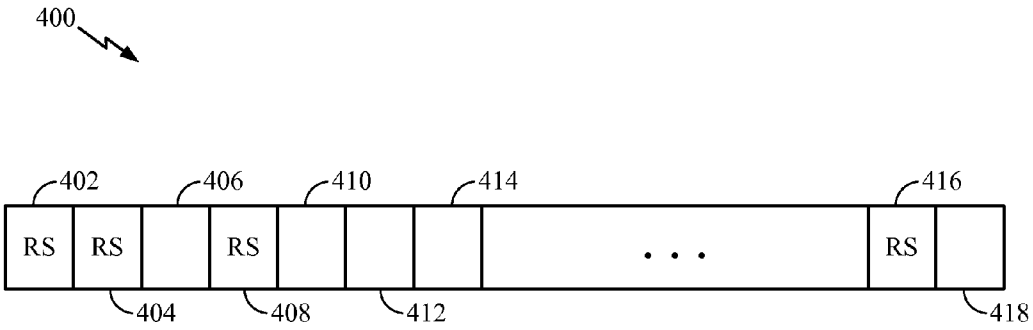
400
402
406
410
414
416
RS
RS
RS
RS
404
408
412
418

FIG. 4

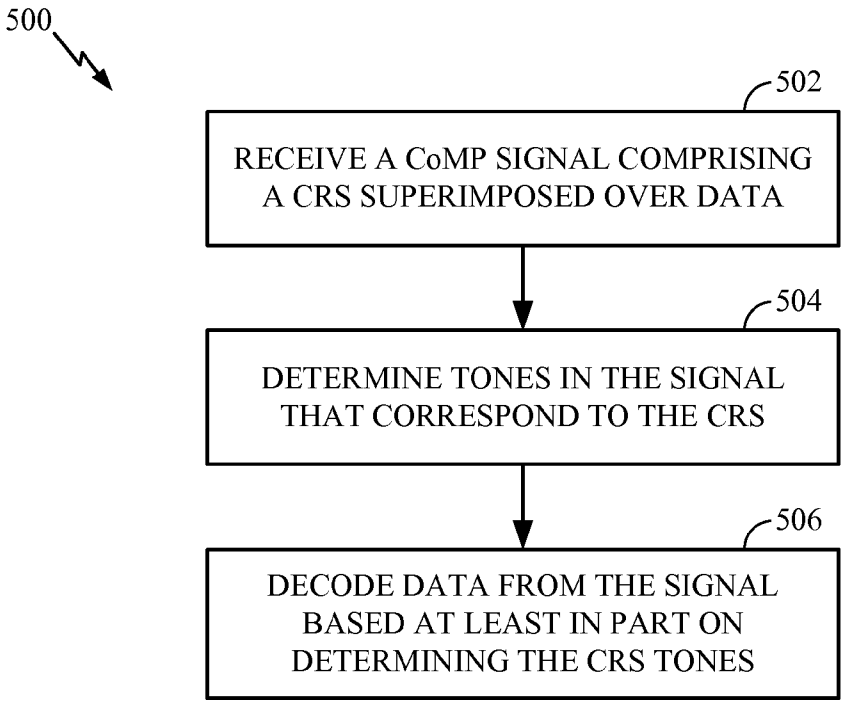
500
502
RECEIVE A CoMP SIGNAL COMPRISING A CRS SUPERIMPOSED OVER DATA
504
DETERMINE TONES IN THE SIGNAL THAT CORRESPOND TO THE CRS
506
DECODE DATA FROM THE SIGNAL BASED AT LEAST IN PART ON DETERMINING THE CRS TONES

FIG. 5

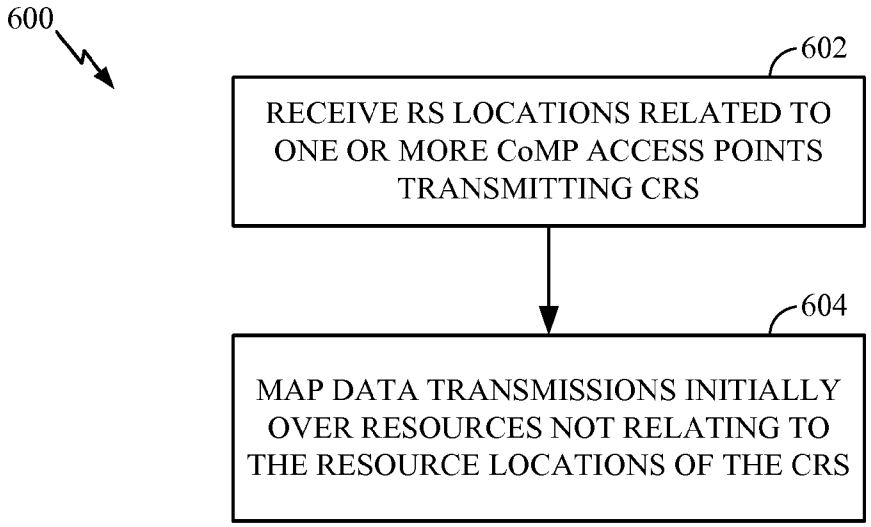
600
602
RECEIVE RS LOCATIONS RELATED TO ONE OR MORE CoMP ACCESS POINTS TRANSMITTING CRS
604
MAP DATA TRANSMISSIONS INITIALLY OVER RESOURCES NOT RELATING TO THE RESOURCE LOCATIONS OF THE CRS

FIG. 6

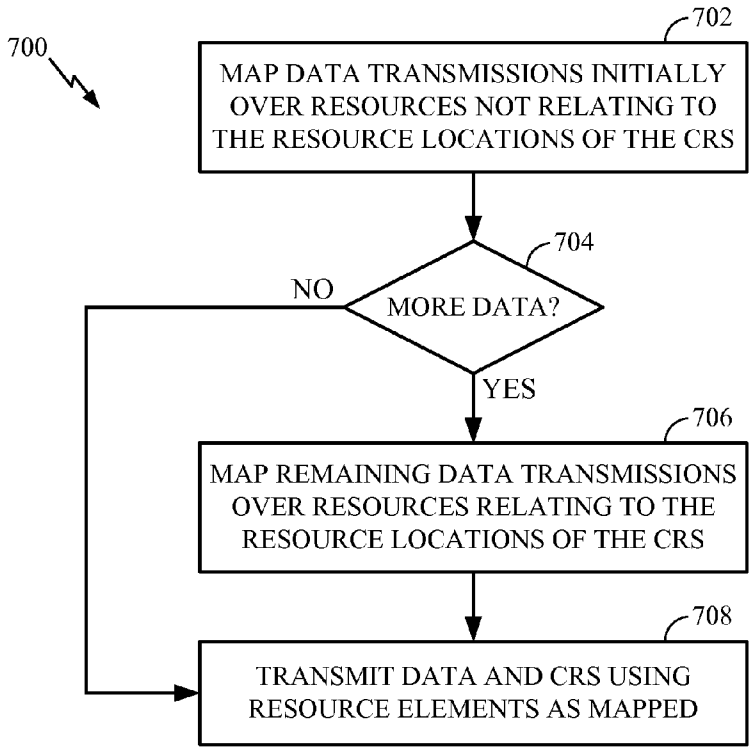

FIG. 7

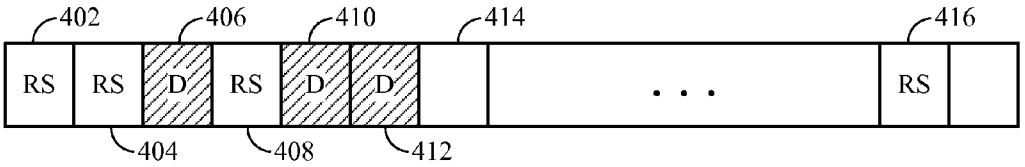

FIG. 8

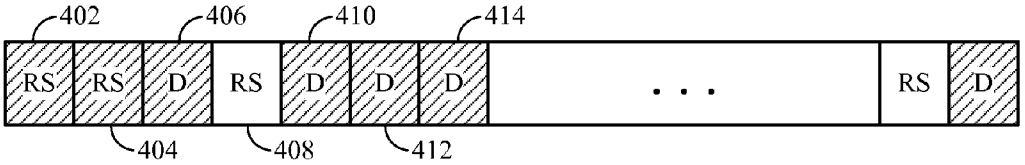

FIG. 9

ROBUST DECODING OF COMP TRANSMISSIONS

CLAIM OF PRIORITY UNDER 35 U.S.C. §119

[0001] The present application for patent claims benefit of U.S. Provisional Patent Application No. 61/230,068, entitled, "Robust Decoding of CoMP Transmissions," filed Jul. 30, 2009, and assigned to the assignee hereof and hereby expressly incorporated by reference herein.

BACKGROUND

Field

[0002] Wireless communication systems are widely deployed to provide various types of communication content such as voice, data, and so on. These systems may be multiple-access systems capable of supporting communication with multiple users by sharing the available system resources (e.g., bandwidth and transmit power). Examples of such multiple-access systems include code division multiple access (CDMA) systems, time division multiple access (TDMA) systems, frequency division multiple access (FDMA) systems, 3GPP Long Term Evolution (LTE) systems, and orthogonal frequency division multiple access (OFDMA) systems.

[0003] Generally, a wireless multiple-access communication system can simultaneously support communication for multiple wireless terminals. Each terminal communicates with one or more base stations via transmissions on the forward and reverse links. The forward link (or downlink) refers to the communication link from the base stations to the terminals, and the reverse link (or uplink) refers to the communication link from the terminals to the base stations. This communication link may be established via a single-in-single-out, multiple-in-signal-out or a multiple-in-multiple-out (MIMO) system.

[0004] A MIMO system employs multiple (N_T) transmit antennas and multiple (N_R) receive antennas for data transmission. A MIMO channel formed by the N_T transmit and N_R receive antennas may be decomposed into N_S independent channels, which are also referred to as spatial channels, where $N_S \leqq \min\{N_T, N_R\}$. Each of the N_S independent channels corresponds to a dimension. The MIMO system can provide improved performance (e.g., higher throughput and/or greater reliability) if the additional dimensionalities created by the multiple transmit and receive antennas are utilized.

[0005] In addition, in coordinated multiple point (CoMP) configurations, multiple base stations can transmit to and/or receive from a given mobile terminal, facilitating increased throughput and/or signal quality in communicating with the mobile terminal. In one example, base stations cooperating using CoMP can transmit substantially the same data, during substantially the same time periods, to a given mobile terminal.

SUMMARY

[0006] Certain aspects of the present disclosure provide a method for wireless communications. The method generally includes receiving a signal from access points in a coordinated multiple point (CoMP) communication set, the signal comprising a common reference signal (CRS) superimposed over data, determining CRS locations in the signal that correspond to the CRS, and decoding data from the signal based at least in part on the determined CRS locations.

[0007] Certain aspects of the present disclosure provide a method for wireless communications. The method generally includes determining reference signal (RS) resource locations related to one or more access points in a coordinated multiple point (CoMP) set transmitting a common reference signal (CRS), mapping data transmissions initially over a first set of resources that do not correspond to determined RS resource locations, and mapping remaining data transmissions over a second set of resources that correspond to determined RS resource locations.

[0008] Certain aspects of the present disclosure provide an apparatus for wireless communications. The apparatus generally includes at least one processor configured to receive a signal from access points in a coordinated multiple point (CoMP) communication set, the signal comprising a common reference signal (CRS) superimposed over data, determine CRS locations in the signal that correspond to the CRS, and decode data from the signal based at least in part on the determined CRS locations, and a memory coupled to the at least one processor.

[0009] Certain aspects of the present disclosure provide an apparatus for wireless communications. The apparatus generally includes at least one processor configured to determine reference signal (RS) resource locations related to one or more access points in a coordinated multiple point (CoMP) set transmitting a common reference signal (CRS), map data transmissions initially over a first set of resources that do not correspond to determined RS resource locations, and map remaining data transmissions over a second set of resources that correspond to determined RS resource locations, and a memory coupled to the at least one processor.

[0010] Certain aspects of the present disclosure provide an apparatus for wireless communications. The apparatus generally includes means for receiving a signal from access points in a coordinated multiple point (CoMP) communication set, the signal comprising a common reference signal (CRS) superimposed over data, means for determining CRS locations in the signal that correspond to the CRS, and means for decoding data from the signal based at least in part on the determined CRS locations.

[0011] Certain aspects of the present disclosure provide an apparatus for wireless communications. The apparatus generally includes means for determining reference signal (RS) resource locations related to one or more access points in a coordinated multiple point (CoMP) set transmitting a common reference signal (CRS), means for mapping data transmissions initially over a first set of resources that do not correspond to determined RS resource locations, and means for mapping remaining data transmissions over a second set of resources that correspond to determined RS resource locations.

[0012] Certain aspects provide a computer-program product for wireless communications, comprising a computer readable medium having instructions stored thereon, the instructions being executable by one or more processors. The instructions generally include instructions for receiving a signal from access points in a coordinated multiple point (CoMP) communication set, the signal comprising a common reference signal (CRS) superimposed over data, instructions for determining CRS locations in the signal that correspond to the CRS, and instructions for decoding data from the signal based at least in part on the determined CRS locations.

[0013] Certain aspects provide a computer-program product for wireless communications, comprising a computer readable medium having instructions stored thereon, the instructions being executable by one or more processors. The instructions generally include instructions for determining reference signal (RS) resource locations related to one or more access points in a coordinated multiple point (CoMP) set transmitting a common reference signal (CRS), instructions for mapping data transmissions initially over a first set of resources that do not correspond to determined RS resource locations, and instructions for mapping remaining data transmissions over a second set of resources that correspond to determined RS resource locations.

BRIEF DESCRIPTION OF THE DRAWINGS

[0014] The features, nature, and advantages of the present disclosure will become more apparent from the detailed description set forth below when taken in conjunction with the drawings in which like reference characters identify correspondingly throughout and wherein:

[0015] FIG. **1** illustrates a multiple access wireless communication system according to one embodiment.

[0016] FIG. **2** illustrates a block diagram of a communication system.

[0017] FIG. **3** illustrates an example system that facilitates mapping and decoding data in light of common reference signal (CRS) transmissions.

[0018] FIG. **4** illustrates an example portion of resource blocks that are allocated for data and CRS transmissions.

[0019] FIG. **5** illustrates an example methodology that facilitates decodes data over resources additionally used for CRS transmissions.

[0020] FIG. **6** illustrates an example methodology that facilitates initially mapping data over resources not utilized for CRS transmissions.

[0021] FIG. **7** illustrates an example methodology that facilitates initially mapping data over resources not utilized for CRS transmissions.

[0022] FIG. **8** illustrates an example portion of resource blocks that are allocated for data transmission, initially avoiding resource blocks used for CRS transmissions

[0023] FIG. **9** illustrates an example portion of resource blocks that are allocated for data transmission, utilizing resource blocks used for CRS transmissions.

DESCRIPTION

[0024] The techniques described herein may be used for various wireless communication networks such as Code Division Multiple Access (CDMA) networks, Time Division Multiple Access (TDMA) networks, Frequency Division Multiple Access (FDMA) networks, Orthogonal FDMA (OFDMA) networks, Single-Carrier FDMA (SC-FDMA) networks, etc. The terms "networks" and "systems" are often used interchangeably. A CDMA network may implement a radio technology such as Universal Terrestrial Radio Access (UTRA), cdma2000, etc. UTRA includes Wideband-CDMA (W-CDMA) and Low Chip Rate (LCR). cdma2000 covers IS-2000, IS-95 and IS-856 standards. A TDMA network may implement a radio technology such as Global System for Mobile Communications (GSM). An OFDMA network may implement a radio technology such as Evolved UTRA (E-UTRA), IEEE 802.11, IEEE 802.16, IEEE 802.20, Flash-OFDM®, etc. UTRA, E-UTRA and GSM are part of Universal Mobile Telecommunication System (UMTS). Long Term Evolution (LTE) is an upcoming release of UMTS that uses E-UTRA. UTRA, E-UTRA, GSM, UMTS and LTE are described in documents from an organization named "3rd Generation Partnership Project" (3GPP). cdma2000 is described in documents from an organization named "3rd Generation Partnership Project 2" (3GPP2). These various radio technologies and standards are known in the art. For clarity, certain aspects of the techniques are described below for LTE, and LTE terminology is used in much of the description below.

[0025] Single carrier frequency division multiple access (SC-FDMA), which utilizes single carrier modulation and frequency domain equalization is a technique. SC-FDMA has similar performance and essentially the same overall complexity as those of OFDMA system. SC-FDMA signal has lower peak-to-average power ratio (PAPR) because of its inherent single carrier structure. SC-FDMA has drawn great attention, especially in the uplink communications where lower PAPR greatly benefits the mobile terminal in terms of transmit power efficiency. It is currently a working assumption for uplink multiple access scheme in 3GPP Long Term Evolution (LTE), or Evolved UTRA.

[0026] Referring to FIG. **1**, a multiple access wireless communication system according to one embodiment is illustrated. An access point **100** (AP) includes multiple antenna groups, one including 104 and 106, another including 108 and 110, and an additional including 112 and 114. In FIG. **1**, only two antennas are shown for each antenna group, however, more or fewer antennas may be utilized for each antenna group. Access terminal **116** (AT) is in communication with antennas **112** and **114**, where antennas **112** and **114** transmit information to access terminal **116** over forward link **120** and receive information from access terminal **116** over reverse link **118**. Access terminal **122** is in communication with antennas **106** and **108**, where antennas **106** and **108** transmit information to access terminal **122** over forward link **126** and receive information from access terminal **122** over reverse link **124**. In a FDD system, communication links **118**, **120**, **124** and **126** may use different frequency for communication. For example, forward link **120** may use a different frequency then that used by reverse link **118**.

[0027] Each group of antennas and/or the area in which they are designed to communicate is often referred to as a sector of the access point. In the embodiment, antenna groups each are designed to communicate to access terminals in a sector of the areas covered by access point **100**.

[0028] In communication over forward links **120** and **126**, the transmitting antennas of access point **100** utilize beamforming in order to improve the signal-to-noise ratio of forward links for the different access terminals **116** and **124**. Also, an access point using beamforming to transmit to access terminals scattered randomly through its coverage causes less interference to access terminals in neighboring cells than an access point transmitting through a single antenna to all its access terminals.

[0029] An access point may be a fixed station used for communicating with the terminals and may also be referred to as an access point, a Node B, or some other terminology. An access terminal may also be called an access terminal, user equipment (UE), a wireless communication device, terminal, access terminal or some other terminology. Moreover, an access point may be a macrocell access point, femtocell access point, picocell access point, and/or the like.

[0030] In one example, as depicted, access terminal **122** can similarly communicate with access points **128** and/or **130**. In one example, access point **128** can be a macrocell access point and access point **130** can be a smaller scale access point, such as a femtocell access point; however, it is to be appreciated that these access points **128** and **130** can, as well, be substantially any sort of access point. Access points **100**, **128** and/or **130** can communicate with access terminal **122** in a coordinated multiple point (CoMP) mode such that access points **100**, **128**, and/or **130** transmit substantially the same data at substantially the same time to the access terminal **122**. Similarly, the access points **100**, **128** and/or **130** can receive transmissions from the access terminal **122**. It is to be appreciated that access points **100**, **128**, and/or **130** can also communicate with one another, over a backhaul link (e.g., through a core wireless network or otherwise), over the air, and/or the like to facilitate CoMP communications.

[0031] In addition, access points **100**, **128** and **130** can transmit a dedicated reference signal (DRS) to access terminal **122**, which can be substantially the same DRS in CoMP communications. Access points **100**, **128**, and **130** can also transmit a common reference signal (CRS), which can be mapped over resources selected based on an identifier of a cell provided by the given access point. Access points **100**, **128**, and **130**, and/or access terminal **122** can mitigate possible interference caused by CRS transmissions. In one example, access points **100**, **128** and **130** can first map data transmissions over resource elements not used for transmitting CRS. In another example, access points **100**, **128**, and/or **130** can indicate the CoMP set of cells to the access terminal **122**, and the access terminal **122** can determine when CRSs are transmitted based on identifiers of the cells and use this information in decoding. In yet another example, access points **100**, **128** and **130** can transmit CRSs superimposed on data transmissions from other cells, and the access terminal **122** can utilize joint detection, interference cancellation, and/or the like to decode data transmissions.

[0032] FIG. **2** is a block diagram of an embodiment of a transmitter system **210** (also known as the access point) and a receiver system **250** (also known as access terminal) in a MIMO system **200**. At the transmitter system **210**, traffic data for a number of data streams is provided from a data source **212** to a transmit (TX) data processor **214**.

[0033] In an embodiment, each data stream is transmitted over a respective transmit antenna. TX data processor **214** formats, codes, and interleaves the traffic data for each data stream based on a particular coding scheme selected for that data stream to provide coded data.

[0034] The coded data for each data stream may be multiplexed with pilot data using OFDM techniques. The pilot data is typically a known data pattern that is processed in a known manner and may be used at the receiver system to estimate the channel response. The multiplexed pilot and coded data for each data stream is then modulated (i.e., symbol mapped) based on a particular modulation scheme (e.g., BPSK, QPSK, M-PSK, or M-QAM) selected for that data stream to provide modulation symbols. The data rate, coding and modulation for each data stream may be determined by instructions performed by processor **230**.

[0035] The modulation symbols for all data streams are then provided to a TX MIMO processor **220**, which may further process the modulation symbols (e.g., for OFDM). TX MIMO processor **220** then provides N_T modulation symbol streams to N_T transmitters (TMTR) **222***a* through **222***t*. In certain embodiments, TX MIMO processor **220** applies beamforming weights to the symbols of the data streams and to the antenna from which the symbol is being transmitted.

[0036] Each transmitter **222** receives and processes a respective symbol stream to provide one or more analog signals, and further conditions (e.g., amplifies, filters, and upconverts) the analog signals to provide a modulated signal suitable for transmission over the MIMO channel. N_T modulated signals from transmitters **222***a* through **222***t* are then transmitted from N_T antennas **224***a* through **224***t*, respectively.

[0037] At receiver system **250**, the transmitted modulated signals are received by N_R antennas **252***a* through **252***r* and the received signal from each antenna **252** is provided to a respective receiver (RCVR) **254***a* through **254***r*. Each receiver **254** conditions (e.g., filters, amplifies, and downconverts) a respective received signal, digitizes the conditioned signal to provide samples, and further processes the samples to provide a corresponding "received" symbol stream.

[0038] An RX data processor **260** then receives and processes the N_R received symbol streams from N_R receivers **254** based on a particular receiver processing technique to provide N_T "detected" symbol streams. The RX data processor **260** then demodulates, deinterleaves and decodes each detected symbol stream to recover the traffic data for the data stream. The processing by RX data processor **260** is complementary to that performed by TX MIMO processor **220** and TX data processor **214** at transmitter system **210**.

[0039] A processor **270** periodically determines which precoding matrix to use (discussed below). Processor **270** formulates a reverse link message comprising a matrix index portion and a rank value portion.

[0040] The reverse link message may comprise various types of information regarding the communication link and/or the received data stream. The reverse link message is then processed by a TX data processor **238**, which also receives traffic data for a number of data streams from a data source **236**, modulated by a modulator **280**, conditioned by transmitters **254***a* through **254***r*, and transmitted back to transmitter system **210**.

[0041] At transmitter system **210**, the modulated signals from receiver system **250** are received by antennas **224**, conditioned by receivers **222**, demodulated by a demodulator **240** and processed by a RX data processor **242** to extract the reserve link message transmitted by the receiver system **250**. Processor **230** then determines which pre-coding matrix to use for determining the beamforming weights then processes the extracted message.

[0042] In an aspect, logical channels are classified into Control Channels and Traffic Channels. Logical Control Channels comprise Broadcast Control Channel (BCCH) which is DL channel for broadcasting system control information. Paging Control Channel (PCCH) which is DL channel that transfers paging information. Multicast Control Channel (MCCH) which is Point-to-multipoint DL channel used for transmitting Multimedia Broadcast and Multicast Service (MBMS) scheduling and control information for one or several MTCHs. Generally, after establishing RRC connection this channel is only used by UEs that receive MBMS (Note: old MCCH+MSCH). Dedicated Control Channel (DCCH) is Point-to-point bi-directional channel that transmits dedicated control information and used by UEs having an RRC connection. In aspect, Logical Traffic Channels comprises a Dedicated Traffic Channel (DTCH) which is Point-

to-point bi-directional channel, dedicated to one UE, for the transfer of user information. Also, a Multicast Traffic Channel (MTCH) for Point-to-multipoint DL channel for transmitting traffic data.

[0043] In an aspect, Transport Channels are classified into DL and UL. DL Transport Channels comprise a Broadcast Channel (BCH), Downlink Shared Data Channel (DL-SDCH) and a Paging Channel (PCH), the PCH for support of UE power saving (DRX cycle is indicated by the network to the UE), broadcasted over entire cell and mapped to PHY resources which can be used for other control/traffic channels. The UL Transport Channels comprises a Random Access Channel (RACH), a Request Channel (REQCH), an Uplink Shared Data Channel (UL-SDCH) and plurality of PHY channels. The PHY channels comprise a set of DL channels and UL channels.

[0044] The DL PHY channels comprise:

[0045] Common Pilot Channel (CPICH)

[0046] Synchronization Channel (SCH)

[0047] Common Control Channel (CCCH)

[0048] Shared DL Control Channel (SDCCH)

[0049] Multicast Control Channel (MCCH)

[0050] Shared UL Assignment Channel (SUACH)

[0051] Acknowledgement Channel (ACKCH)

[0052] DL Physical Shared Data Channel (DL-PSDCH)

[0053] UL Power Control Channel (UPCCH)

[0054] Paging Indicator Channel (PICH)

[0055] Load Indicator Channel (LICH)

[0056] The UL PHY Channels comprise:

[0057] Physical Random Access Channel (PRACH)

[0058] Channel Quality Indicator Channel (CQICH)

[0059] Acknowledgement Channel (ACKCH)

[0060] Antenna Subset Indicator Channel (ASICH)

[0061] Shared Request Channel (SREQCH)

[0062] UL Physical Shared Data Channel (UL-PSDCH)

[0063] Broadband Pilot Channel (BPICH)

[0064] In an aspect, a channel structure is provided that preserves low PAR (at any given time, the channel is contiguous or uniformly spaced in frequency) properties of a single carrier waveform.

[0065] For the purposes of the present document, the following abbreviations apply:

[0066] AM Acknowledged Mode

[0067] AMD Acknowledged Mode Data

[0068] ARQ Automatic Repeat Request

[0069] BCCH Broadcast Control CHannel

[0070] BCH Broadcast CHannel

[0071] C- Control-

[0072] CCE Control Channel Element

[0073] CCCH Common Control CHannel

[0074] CCH Control CHannel

[0075] CCTrCH Coded Composite Transport Channel

[0076] CP Cyclic Prefix

[0077] CQI Channel Quality Indicator

[0078] CRC Cyclic Redundancy Check

[0079] CRS Common Reference Signal

[0080] CTCH Common Traffic CHannel

[0081] DCCH Dedicated Control CHannel

[0082] DCH Dedicated CHannel

[0083] DCI Downlink Control Information

[0084] DL DownLink

[0085] DRS Dedicated Reference Signal

[0086] DSCH Downlink Shared CHannel

[0087] DTCH Dedicated Traffic CHannel

[0088] E-CID Enhanced Cell IDentification

[0089] FACH Forward link Access CHannel

[0090] FDD Frequency Division Duplex

[0091] FSTD Frequency Switched Transmit Diversity

[0092] L1 Layer 1 (physical layer)

[0093] L2 Layer 2 (data link layer)

[0094] L3 Layer 3 (network layer)

[0095] LI Length Indicator

[0096] LLR Log-Likelihood Ratio

[0097] LSB Least Significant Bit

[0098] MAC Medium Access Control

[0099] MBMS Multimedia Broadcast Multicast Service

[0100] MCCH MBMS point-to-multipoint Control CHannel

[0101] MRW Move Receiving Window

[0102] MSB Most Significant Bit

[0103] MSCH MBMS point-to-multipoint Scheduling CHannel

[0104] MTCH MBMS point-to-multipoint Traffic CHannel

[0105] PCCH Paging Control CHannel

[0106] PCH Paging CHannel

[0107] PDU Protocol Data Unit

[0108] PHY PHYsical layer

[0109] PhyCH Physical CHannels

[0110] PMI Precoding Matrix Indicator

[0111] PRACH Physical Random Access CHannel

[0112] RACH Random Access CHannel

[0113] RLC Radio Link Control

[0114] RRC Radio Resource Control

[0115] RE Resource Element

[0116] RS Reference Signal

[0117] RTT Round Trip Time

[0118] Rx Receive

[0119] SAP Service Access Point

[0120] SDU Service Data Unit

[0121] SFBC Space Frequency Block Code

[0122] SHCCH SHared channel Control CHannel

[0123] SN Sequence Number

[0124] SUFI SUper FIeld

[0125] TA Timing Advance

[0126] TCH Traffic CHannel

[0127] TDD Time Division Duplex

[0128] TFI Transport Format Indicator

[0129] TM Transparent Mode

[0130] TMD Transparent Mode Data

[0131] TTI Transmission Time Interval

[0132] Tx Transmit

[0133] U- User-

[0134] UE User Equipment

[0135] UL UpLink

[0136] UM Unacknowledged Mode

[0137] UMD Unacknowledged Mode Data

[0138] UMTS Universal Mobile Telecommunications System

[0139] UTRA UMTS Terrestrial Radio Access

[0140] UTRAN UMTS Terrestrial Radio Access Network

[0141] MBSFN multicast broadcast single frequency network

[0142] MCE MBMS coordinating entity

[0143] MCH multicast channel

[0144] DL-SCH downlink shared channel

[0145] MSCH MBMS control channel

[0146] PDCCH physical downlink control channel

[0147] PDSCH physical downlink shared channel

[0148] FIG. **3** illustrates a system **300** that may transmit data and CRSs together, in accordance with certain aspects of the present disclosure. As will be described in greater detail below, the data may be initially mapped to resource elements (REs) that do not contain CRS for any base stations in a CoMP set. After this initial mapping (e.g., after exhausting the REs that are not used for CRS), data may be mapped to REs that are used for CRS. Such mapping may facilitate effectively communicating data in a CoMP configuration despite transmission of CRSs.

[0149] As illustrated, system **300** may includes access points **302** and **304** that can each be a base station, femtocell access point, picocell access point, relay node, mobile base station, mobile device operating in a peer-to-peer communications modes, and/or the like, for example, that provide access to a wireless network.

[0150] Access points **302** and **304** may provide CoMP network access to wireless device **306**. In one example, access points **302** and **304** can be in a CoMP set, which refers to a collection of access points that transmit to a given wireless device using CoMP. Wireless device **306** can be a mobile device, portion thereof, or substantially any device that can receive access to a wireless network. In addition, access points **302** and **304** can communicate with one another to provide the CoMP access (e.g., over a backhaul through a wireless network, over the air, etc.). It is to be appreciated, in an example, that access point **304** can comprise the components described in connection with access point **302** to provide similar functionality.

[0151] Access point **302** can include an RS location determining component **308** that receives (e.g., via a backhaul connection with other access points) or otherwise determines resource locations of RSs for access points in a CoMP set. The access point **302** may also include a data mapping component **310** that may be configured to select resource elements (REs) over which to map data transmissions. The AP **302** may also include a CoMP set indicating component **312** that may be configured to provide information regarding access points in a CoMP set to one or more wireless devices, including wireless device **306**.

[0152] Wireless device **306** may include components configured to perform complementary operations to those components of the AP **302**. As an example, the wireless device **306** may include a CoMP set receiving component **314** configured to receive information regarding a CoMP set of access points. The wireless device **306** may also include a decoding component **316** configured to decode data transmitted by the CoMP access points over a set of resources.

[0153] According to an example, the RS location determining component **308** may receive information regarding RS locations for other access points or related cells in a CoMP set, such as access point **304**. The RS location determining component **308**, for example, may receive this information from the access points, from a core wireless network, from wireless devices previously communicating with the access point **304**, and/or the like. In another example, RS location determining component **308** may compute RS locations for the access points based on an identifier thereof and/or of a related cell.

[0154] In any case, the data mapping component **310** may initially map data to selected REs that do not correspond to RS locations (of any access point in the CoMP set). If, after this initial mapping, there is still data to transmit, this remaining data may be mapped to REs that do correspond to RS locations. In this regard, much of the data can be transmitted without interference from RSs transmitted by access point in the CoMP set.

[0155] According to certain aspects, the CoMP set indicating component **312** can provide information regarding access points of the CoMP set to wireless device **306** (such as identifiers of the access points and/or related cells).

[0156] CoMP set receiving component **314** can obtain the CoMP set information and determine one or more RS locations related to the access points in the CoMP set. For example, CoMP set receiving component **314** can determine RS locations based at least in part on access point or related cell identifiers (e.g., by applying the same algorithm used by the access point to determine when to transmit the RS, by providing the identifier to a core network component that assigns resources for transmitting RSs, etc.).

[0157] The decoding component **316** can decode data based at least in part on knowing the RS resource locations, such that it can decode the RS and data over the RS resource locations, for example. According to certain aspects, the decoding component **316** may derive rate matching schemes for tones located in the symbols comprising CRS tones and decode data based on determining the CRS tones.

[0158] According to yet another example, access points **302** and **304** may transmit data regardless of the CRS transmissions such that when CRSs are transmitted, data resources are superimposed with the CRS. With knowledge of the CRS locations (e.g., determined based on the participating access points), the wireless device **306** may, thus, apply joint detection or interference cancellation (or other techniques) to decode those data tones overlapping with CRS tones from other cells participating in CoMP data transmissions.

[0159] FIG. **4** illustrates an example portion of resource blocks **400** in a communication frame. Access points in a CoMP set, as described, can transmit CRSs over resources selected as a function of cell identifier. In this example, access points in the CoMP set can transmit RSs over resource blocks **402**, **404**, **408** and **416**. As described in one example, an access point can receive information regarding RS locations for access points in the CoMP set.

[0160] As will be described in greater detail below, the access point may initially map data transmissions over resource blocks **406**, **410**, **412**, **414** and **418** to avoid mapping during CRS transmissions, as described. In this example, devices receive data transmissions over the resource elements that are free from CRS interference in resource blocks **406**, **410**, **412**, **414** and **418**. It is to be appreciated that where additional resource blocks are needed, the access point can then map over the resource blocks corresponding to RS locations.

[0161] FIG. **5** illustrates a methodology **500** that decodes data from signals received from CoMP access points. The operations may be performed, for example, by the receiving and decoding components **314** and **316** of the wireless device **306**.

[0162] At **502**, a CoMP signal comprising a CRS superimposed over data can be received. The CoMP signal can be received from various CoMP access points, as described. At **504**, tones in the signal that correspond to the CRS can be determined.

[0163] As described above, the tones may be determined using joint detection, interference cancellation, and/or the like. In another example, the tones can be determined based at least in part on computing resource locations of the CRS based on received access point or related cell identifiers, as described. Moreover, for example, rate matching schemes related to the CRS tones can be derived or decoded based on

the determined CRS resource locations. At **506**, data can be decoded from the signal based at least in part on determining the CRS tones.

[0164] FIG. **6** illustrates a methodology **600** that facilitates mapping data for transmission over resources other than those used for transmitting CRS. The operations may be performed, for example, by the RS location determining and data mapping components **310** and **312** of the access point **302**.

[0165] At **602**, RS locations related to one or more CoMP access points transmitting CRS can be received. As described, the RS locations can be received from the CoMP access points, a wireless network, etc., and/or computed based on identifiers of access point in the CoMP set. At **604**, data transmissions can be initially mapped over resources not relating to the resource locations of the CRS. Thus, for example, data can be mapped to initially avoid such resources to mitigate interference from the CRS of access points in the CoMP set.

[0166] FIG. **7** illustrates example operations **700** that may be performed, for example, by the access point **302**, to transmit data superimposed with CRS. The operations may be described with reference to FIGS. **8** and **9**.

[0167] The operations begin, at **702**, by mapping data transmissions initially over resources not relating to the resource locations of the CRS. For example, as illustrated in FIG. **8**, data (illustrated with a label "D" and cross-hatching) may be first mapped to REs **406** and **410** that do not relate to REs for CRS.

[0168] If there is not more data to map, as determined at block **704**, the data may be transmitted (at **708**) without using resources related to REs for CRS. On the other hand, if there is more data, at **706**, the remaining data transmissions may be mapped over resources relating to the resource locations of the CRS.

[0169] For example, as illustrated in FIG. **9**, the additional data may be mapped to REs **402** and **404** that do relate to REs for CRS. According to certain aspects, in order to mitigate interference, a serving access point may first map data to RE locations related to CRS for other access points in a CoMP set.

[0170] It is understood that the specific order or hierarchy of steps in the processes disclosed is an example of exemplary approaches. Based upon design preferences, it is understood that the specific order or hierarchy of steps in the processes may be rearranged while remaining within the scope of the present disclosure. The accompanying method claims present elements of the various steps in a sample order, and are not meant to be limited to the specific order or hierarchy presented.

[0171] Those of skill in the art would understand that information and signals may be represented using any of a variety of different technologies and techniques. For example, data, instructions, commands, information, signals, bits, symbols and chips that may be referenced throughout the above description may be represented by voltages, currents, electromagnetic waves, magnetic fields or particles, optical fields or particles, or any combination thereof.

[0172] Those of skill would further appreciate that the various illustrative logical blocks, modules, circuits and algorithm steps described in connection with the embodiments disclosed herein may be implemented as electronic hardware, computer software, or combinations of both. To clearly illustrate this interchangeability of hardware and software, various illustrative components, blocks, modules, circuits and steps have been described above generally in terms of their functionality. Whether such functionality is implemented as hardware or software depends upon the particular application and design constraints imposed on the overall system. Skilled artisans may implement the described functionality in varying ways for each particular application, but such implementation decisions should not be interpreted as causing a departure from the scope of the present disclosure.

[0173] The various illustrative logical blocks, modules, and circuits described in connection with the embodiments disclosed herein may be implemented or performed with a general purpose processor, a digital signal processor (DSP), an application specific integrated circuit (ASIC), a field programmable gate array (FPGA) or other programmable logic device, discrete gate or transistor logic, discrete hardware components, or any combination thereof designed to perform the functions described herein. A general purpose processor may be a microprocessor, but in the alternative, the processor may be any conventional processor, controller, microcontroller or state machine. A processor may also be implemented as a combination of computing devices, e.g., a combination of a DSP and a microprocessor, a plurality of microprocessors, one or more microprocessors in conjunction with a DSP core, or any other such configuration.

[0174] The steps of a method or algorithm described in connection with the embodiments disclosed herein may be embodied directly in hardware, in a software module executed by a processor, or in a combination of the two. A software module may reside in RAM memory, flash memory, ROM memory, EPROM memory, EEPROM memory, registers, hard disk, a removable disk, a CD-ROM or any other form of storage medium known in the art. An exemplary storage medium is coupled to the processor such the processor can read information from, and write information to, the storage medium. In the alternative, the storage medium may be integral to the processor. The processor and the storage medium may reside in an ASIC. The ASIC may reside in a user terminal. In the alternative, the processor and the storage medium may reside as discrete components in a user terminal.

[0175] The previous description of the disclosed embodiments is provided to enable any person skilled in the art to make or use the present disclosure. Various modifications to these embodiments will be readily apparent to those skilled in the art, and the generic principles defined herein may be applied to other embodiments without departing from the spirit or scope of the disclosure. Thus, the present disclosure is not intended to be limited to the embodiments shown herein but is to be accorded the widest scope consistent with the principles and novel features disclosed herein.

What is claimed is:

1. A method for wireless communications, comprising:

receiving a signal from access points in a coordinated multiple point (CoMP) communication set, the signal comprising a common reference signal (CRS) superimposed over data;

determining CRS locations in the signal that correspond to the CRS; and

decoding data from the signal based at least in part on the determined CRS locations.

2. The method of claim **1**, wherein the decoding comprises:

utilizing joint detection, based on knowledge of the determined CRS locations, over the signal to extract tones related to the CRS.

3. The method of claim **2**, further comprising:

receiving an indication of access points participating in CoMP; and

determining the CRS locations based on the indication.

4. The method of claim **3**, further comprising:
deriving rate matching schemes for CRS tone locations of non-serving access points in the CoMP set, based on a serving cell CRS transmission; and
decoding data superimposed on CRS tone locations of the non-serving access points.

5. The method of claim **1**, wherein the decoding comprises utilizing interference cancelation over the signal to cancel tones related to the CRS.

6. A method for wireless communications, comprising:
determining reference signal (RS) resource locations related to one or more access points in a coordinated multiple point (CoMP) set transmitting a common reference signal (CRS);
mapping data transmissions initially over a first set of resources that do not correspond to determined RS resource locations; and
mapping remaining data transmissions over a second set of resources that correspond to determined RS resource locations.

7. The method of claim **6**, wherein mapping remaining data transmissions comprises mapping remaining data transmissions over resources that correspond to determined RS resource locations only after exhausting resource locations that do not correspond to determined RS resource locations.

8. The method of claim **6**, wherein mapping remaining data transmissions comprises mapping remaining data transmissions initially to resource elements that correspond to determined RS resource locations used by access points in the CoMP set other than a serving access point.

9. The method of claim **6**, wherein the determining the RS resource locations comprises computing the RS resource locations based at least in part on identifiers of the one or more access points or related cells.

10. The method of claim **6**, further comprising providing an indication to one or more access points of access points participating in coordinated multiple point (CoMP) communication.

11. The method of claim **10**, wherein the indication is provided via a physical downlink control channel (PDCCH).

12. An apparatus for wireless communications, comprising:
at least one processor configured to:
receive a signal from access points in a coordinated multiple point (CoMP) communication set, the signal comprising a common reference signal (CRS) superimposed over data,
determine CRS locations in the signal that correspond to the CRS, and
decode data from the signal based at least in part on the determined CRS locations; and
a memory coupled to the at least one processor.

13. The apparatus of claim **12**, wherein the at least one processor configured to decode is further configured to:
utilize joint detection, based on knowledge of the determined CRS locations, over the signal to extract tones related to the CRS.

14. The apparatus of claim **13**, wherein the at least one processor is further configured to:
receive an indication of access points participating in CoMP; and
determine the CRS locations based on the indication.

15. The apparatus of claim **14**, wherein the at least one processor is further configured to:
derive rate matching schemes for CRS tone locations of non-serving access points in the CoMP set, based on a serving cell CRS transmission; and
decode data superimposed on CRS tone locations of the non-serving access points.

16. The apparatus of claim **12**, wherein the at least one processor configured to decode is further configured to utilize interference cancelation over the signal to cancel tones related to the CRS.

17. An apparatus for wireless communications, comprising:
at least one processor configured to:
determine reference signal (RS) resource locations related to one or more access points in a coordinated multiple point (CoMP) set transmitting a common reference signal (CRS),
map data transmissions initially over a first set of resources that do not correspond to determined RS resource locations, and
map remaining data transmissions over a second set of resources that correspond to determined RS resource locations; and
a memory coupled to the at least one processor.

18. The apparatus of claim **17**, wherein the at least one processor configured to map remaining data transmissions is also configured to map remaining data transmissions over resources that correspond to determined RS resource locations only after exhausting resource locations that do not correspond to determined RS resource locations.

19. The apparatus of claim **17**, wherein the at least one processor configured to map remaining data transmissions is further configured to map remaining data transmissions initially to resource elements that correspond to determined RS resource locations used by access points in the CoMP set other than a serving access point.

20. The apparatus of claim **17**, wherein the at least one processor configured to determine the RS resource locations is further configured to compute the RS resource locations based at least in part on identifiers of the one or more access points or related cells.

21. The apparatus of claim **17**, the at least one processor is further configured to provide an indication to one or more access points of access points participating in coordinated multiple point (CoMP) communication.

22. The apparatus of claim **21**, wherein the indication is provided via a physical downlink control channel (PDCCH).

23. An apparatus for wireless communications, comprising:
means for receiving a signal from access points in a coordinated multiple point (CoMP) communication set, the signal comprising a common reference signal (CRS) superimposed over data;
means for determining CRS locations in the signal that correspond to the CRS; and
means for decoding data from the signal based at least in part on the determined CRS locations.

24. The apparatus of claim **23**, wherein the means for decoding comprises:
means for utilizing joint detection, based on knowledge of the determined CRS locations, over the signal to extract tones related to the CRS.

25. The apparatus of claim **24**, further comprising:
means for receiving an indication of access points participating in CoMP; and

means for determining the CRS locations based on the indication.

26. The apparatus of claim **25**, further comprising:

means for deriving rate matching schemes for CRS tone locations of non-serving access points in the CoMP set, based on a serving cell CRS transmission; and

means for decoding data superimposed on CRS tone locations of the non-serving access points.

27. The apparatus of claim **23**, wherein the means for decoding comprises means for utilizing interference cancelation over the signal to cancel tones related to the CRS.

28. An apparatus for wireless communications, comprising:

means for determining reference signal (RS) resource locations related to one or more access points in a coordinated multiple point (CoMP) set transmitting a common reference signal (CRS);

means for mapping data transmissions initially over a first set of resources that do not correspond to determined RS resource locations; and

means for mapping remaining data transmissions over a second set of resources that correspond to determined RS resource locations.

29. The apparatus of claim **28**, wherein the means for mapping remaining data transmissions comprises means for mapping remaining data transmissions over resources that correspond to determined RS resource locations only after exhausting resource locations that do not correspond to determined RS resource locations.

30. The apparatus of claim **28**, wherein the means for mapping remaining data transmissions comprises means for mapping remaining data transmissions initially to resource elements that correspond to determined RS resource locations used by access points in the CoMP set other than a serving access point.

31. The apparatus of claim **28**, wherein the means for determining the RS resource locations comprises means for computing the RS resource locations based at least in part on identifiers of the one or more access points or related cells.

32. The apparatus of claim **28**, further comprising:

means for providing an indication to one or more access points of access points participating in coordinated multiple point (CoMP) communication.

33. The apparatus of claim **32**, wherein the indication is provided via a physical downlink control channel (PDCCH).

34. A computer-program product for wireless communications, comprising a computer readable medium having instructions stored thereon, the instructions being executable by one or more processors and the instructions comprising:

instructions for receiving a signal from access points in a coordinated multiple point (CoMP) communication set, the signal comprising a common reference signal (CRS) superimposed over data;

instructions for determining CRS locations in the signal that correspond to the CRS; and

instructions for decoding data from the signal based at least in part on the determined CRS locations.

35. The computer-program product of claim **34**, wherein the instructions for decoding comprise:

instructions for utilizing joint detection, based on knowledge of the determined CRS locations, over the signal to extract tones related to the CRS.

36. The computer-program product of claim **35**, further comprising:

instructions for receiving an indication of access points participating in CoMP; and

instructions for determining the CRS locations based on the indication.

37. The computer-program product of claim **36**, further comprising:

instructions for deriving rate matching schemes for CRS tone locations of non-serving access points in the CoMP set, based on a serving cell CRS transmission; and

instructions for decoding data superimposed on CRS tone locations of the non-serving access points.

38. The computer-program product of claim **34**, wherein the instructions for decoding comprise instructions for utilizing interference cancelation over the signal to cancel tones related to the CRS.

39. A computer-program product for wireless communications, comprising a computer readable medium having instructions stored thereon, the instructions being executable by one or more processors and the instructions comprising:

instructions for determining reference signal (RS) resource locations related to one or more access points in a coordinated multiple point (CoMP) set transmitting a common reference signal (CRS);

instructions for mapping data transmissions initially over a first set of resources that do not correspond to determined RS resource locations; and

instructions for mapping remaining data transmissions over a second set of resources that correspond to determined RS resource locations.

40. The computer-program product of claim **39**, wherein the instructions for mapping remaining data transmissions comprise instructions for mapping remaining data transmissions over resources that correspond to determined RS resource locations only after exhausting resource locations that do not correspond to determined RS resource locations.

41. The computer-program product of claim **39**, wherein the instructions for mapping remaining data transmissions comprise instructions for mapping remaining data transmissions initially to resource elements that correspond to determined RS resource locations used by access points in the CoMP set other than a serving access point.

42. The computer-program product of claim **39**, wherein the instructions for determining the RS resource locations comprise instructions for computing the RS resource locations based at least in part on identifiers of the one or more access points or related cells.

43. The computer-program product of claim **39**, further comprising:

instructions for providing an indication to one or more access points of access points participating in coordinated multiple point (CoMP) communication.

44. The computer-program product of claim **43**, wherein the indication is provided via a physical downlink control channel (PDCCH).

* * * * *