US 20110176519A1

(19) United States

(12) Patent Application Publication

Vitthaladevuni et al.

(10) Pub. No.: US 2011/0176519 A1

(43) Pub. Date: Jul. 21, 2011

(54) **SIGNALLING OF MULTIPLE-USER MULTIPLE-INPUT AND MULTIPLE-OUTPUT TRANSMISSIONS IN HIGH-SPEED PACKET ACCESS SYSTEMS**

(76) Inventors: **Pavan Kumar Vitthaladevuni**, San Diego, CA (US); **Daniu Zhang**, San Deigo, CA (US); **Rohit Kapoor**, San Diego, CA (US); **Jilei Hou**, Carlsbad, CA (US); **Stefan Brueck**, Nurembeng (DE); **Josef J. Blanz**, Forst (DE)

(21) Appl. No.: **12/946,705**

(22) Filed: **Nov. 15, 2010**

Related U.S. Application Data

(60) Provisional application No. 61/262,115, filed on Nov. 17, 2009.

Publication Classification

(51) **Int. Cl.**
H04W 72/04 (2009.01)
H04W 4/00 (2009.01)

(52) **U.S. Cl.** **370/336**; 370/328; 370/329

(57) **ABSTRACT**

A method for signaling multiple-user multiple-input and multiple-output in a high speed packet access system is described. A multiple-user multiple-input and multiple-output parameter is determined. A message that includes the multiple-user multiple-input and multiple-output parameter is determined. The message is sent to a wireless device. The method may be performed by a user equipment, a Node B or a radio network controller.

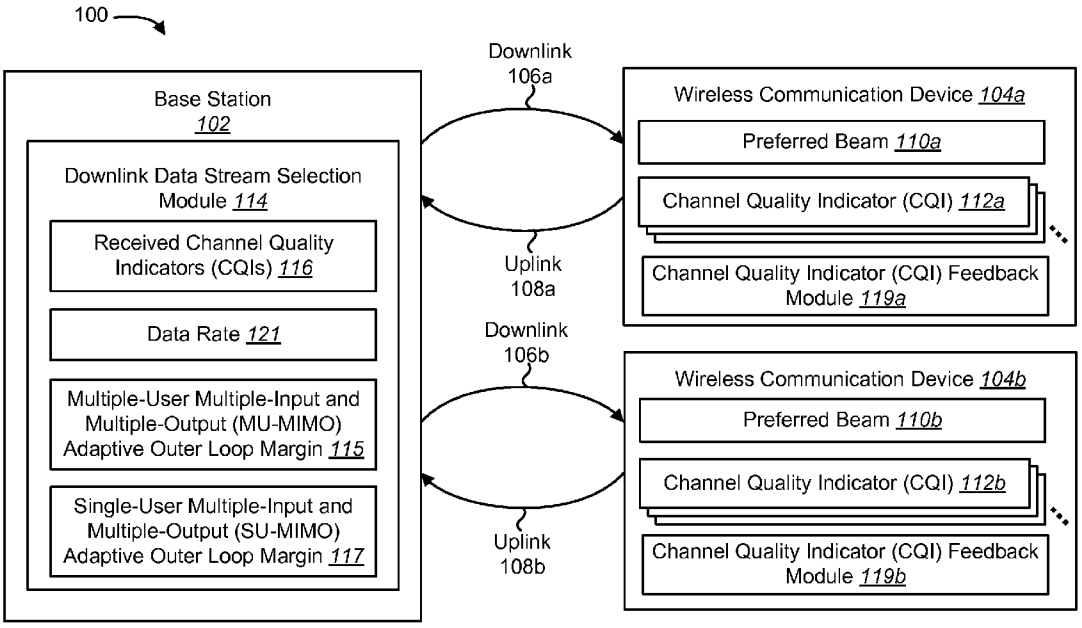

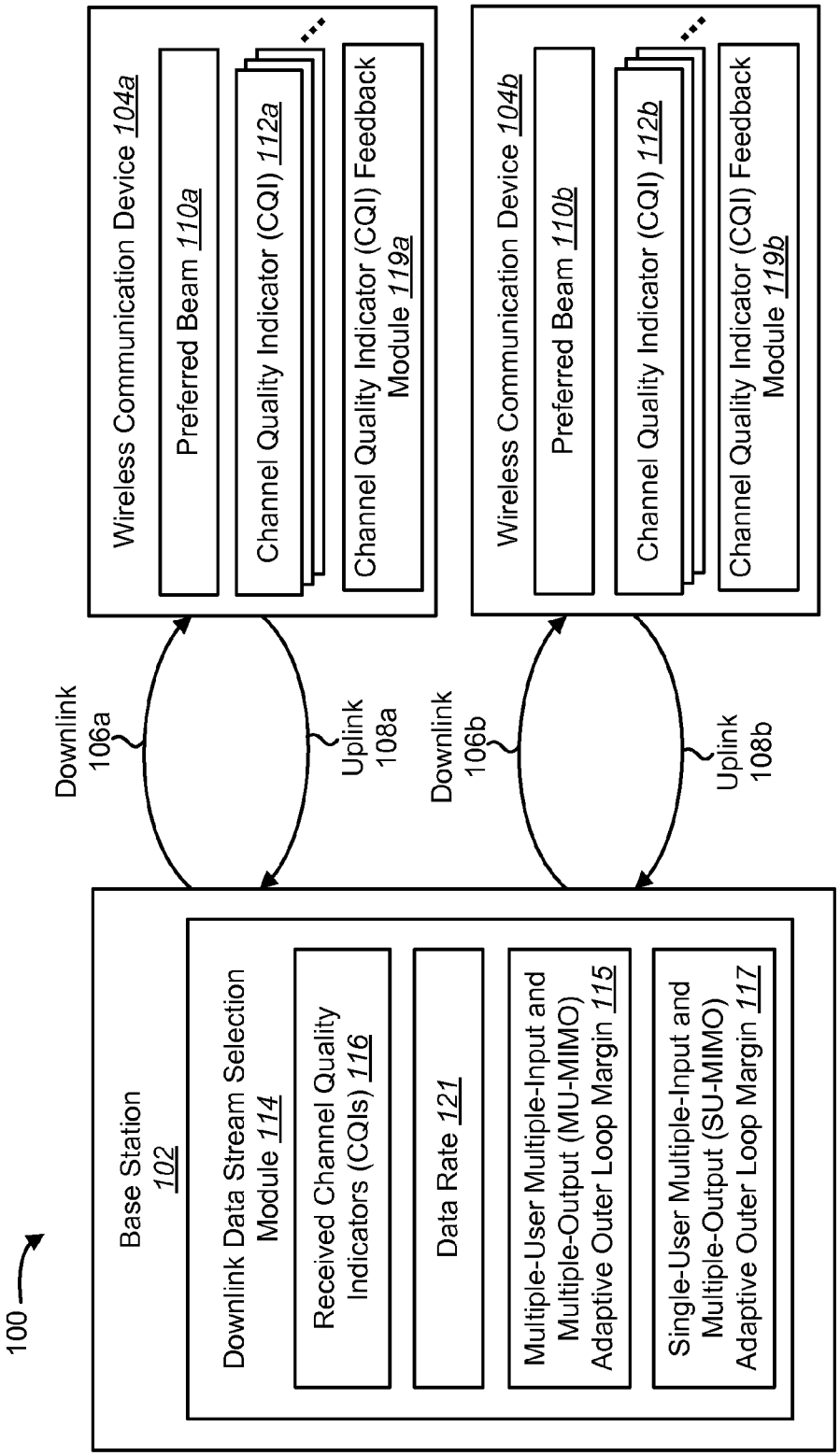
100
Base Station 102
Downlink Data Stream Selection Module 114
Received Channel Quality Indicators (CQIs) 116
Data Rate 121
Multiple-User Multiple-Input and Multiple-Output (MU-MIMO) Adaptive Outer Loop Margin 115
Single-User Multiple-Input and Multiple-Output (SU-MIMO) Adaptive Outer Loop Margin 117
Downlink 106a
Uplink 108a
Downlink 106b
Uplink 108b
Wireless Communication Device 104a
Preferred Beam 110a
Channel Quality Indicator (CQI) 112a
Channel Quality Indicator (CQI) Feedback Module 119a
Wireless Communication Device 104b
Preferred Beam 110b
Channel Quality Indicator (CQI) 112b
Channel Quality Indicator (CQI) Feedback Module 119b

FIG. 1

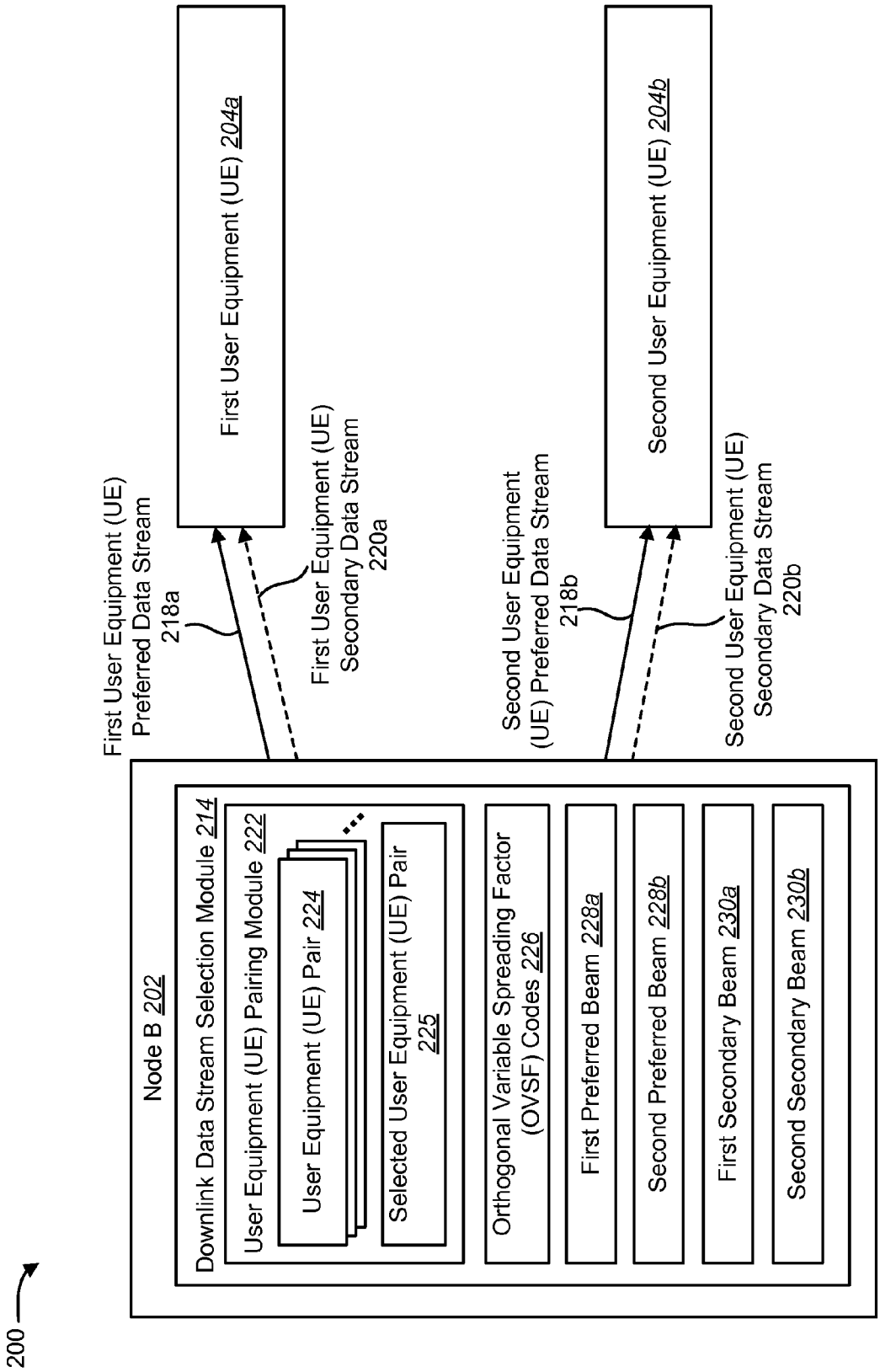
200
Node B 202
Downlink Data Stream Selection Module 214
User Equipment (UE) Pairing Module 222
User Equipment (UE) Pair 224
Selected User Equipment (UE) Pair 225
Orthogonal Variable Spreading Factor (OVSF) Codes 226
First Preferred Beam 228a
Second Preferred Beam 228b
First Secondary Beam 230a
Second Secondary Beam 230b
First User Equipment (UE) Preferred Data Stream 218a
First User Equipment (UE) Secondary Data Stream 220a
Second User Equipment (UE) Preferred Data Stream 218b
Second User Equipment (UE) Secondary Data Stream 220b
First User Equipment (UE) 204a
Second User Equipment (UE) 204b

FIG. 2

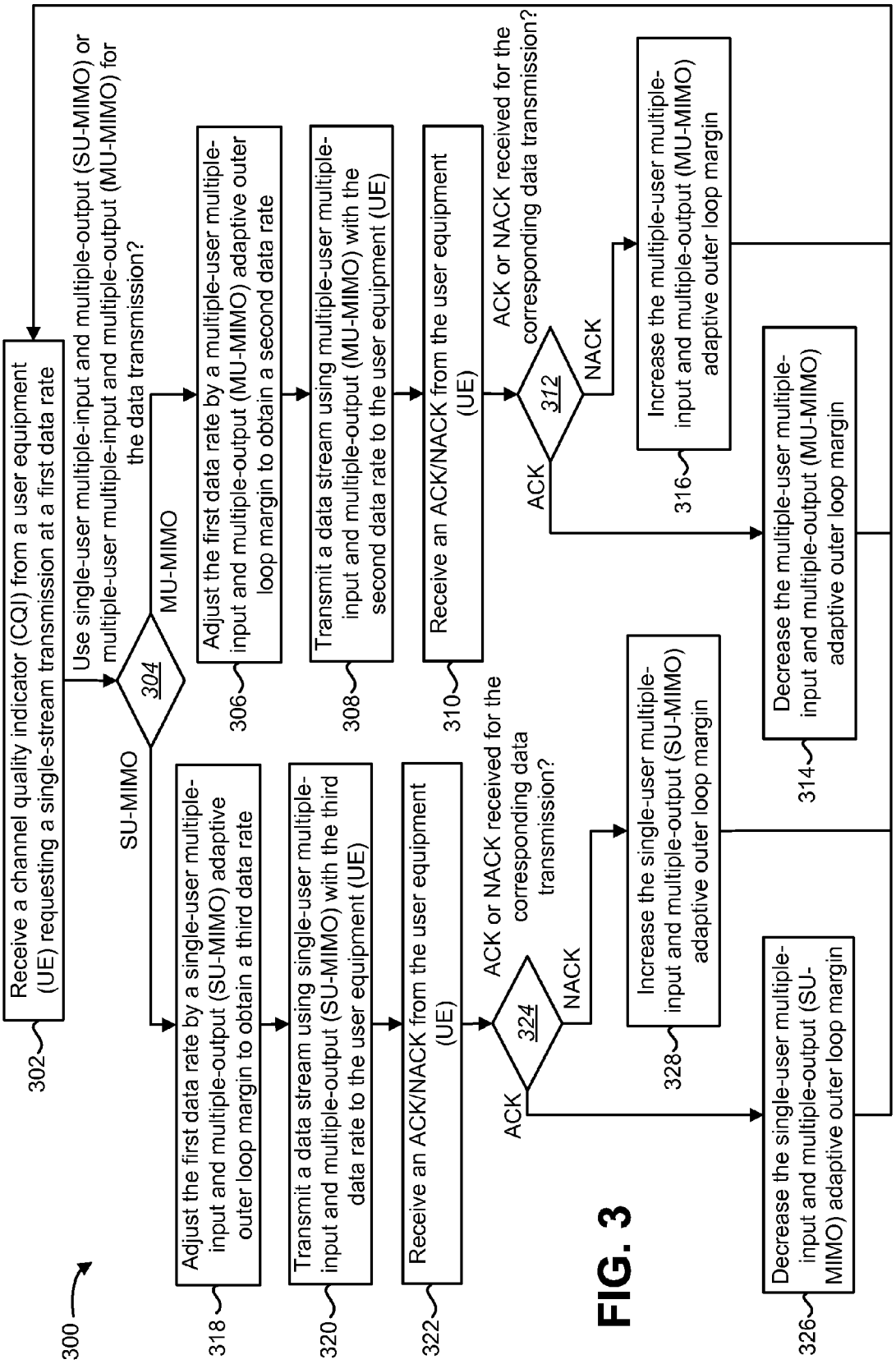
300
302
Receive a channel quality indicator (CQI) from a user equipment (UE) requesting a single-stream transmission at a first data rate
Use single-user multiple-input and multiple-output (SU-MIMO) or multiple-user multiple-input and multiple-output (MU-MIMO) for the data transmission?
304
SU-MIMO
MU-MIMO
306
Adjust the first data rate by a multiple-user multiple-input and multiple-output (MU-MIMO) adaptive outer loop margin to obtain a second data rate
308
Transmit a data stream using multiple-user multiple-input and multiple-output (MU-MIMO) with the second data rate to the user equipment (UE)
310
Receive an ACK/NACK from the user equipment (UE)
ACK or NACK received for the corresponding data transmission?
312
ACK
NACK
316
Increase the multiple-user multiple-input and multiple-output (MU-MIMO) adaptive outer loop margin
314
Decrease the multiple-user multiple-input and multiple-output (MU-MIMO) adaptive outer loop margin
318
Adjust the first data rate by a single-user multiple-input and multiple-output (SU-MIMO) adaptive outer loop margin to obtain a third data rate
320
Transmit a data stream using single-user multiple-input and multiple-output (SU-MIMO) with the third data rate to the user equipment (UE)
322
Receive an ACK/NACK from the user equipment (UE)
ACK or NACK received for the corresponding data transmission?
324
ACK
NACK
328
Increase the single-user multiple-input and multiple-output (SU-MIMO) adaptive outer loop margin
326
Decrease the single-user multiple-input and multiple-output (SU-MIMO) adaptive outer loop margin

FIG. 3

	UE1 404a	UE2 404b	UE3 404c	UE4 404d	UE5 404e
UE1 404a		Non-Orthogonal	Non-Orthogonal	Orthogonal (User Equipment (UE) Pair) 432a	Non-Orthogonal
UE2 404b	Non-Orthogonal		Orthogonal (User Equipment (UE) Pair) 432b	Non-Orthogonal	Non-Orthogonal
UE3 404c	Non-Orthogonal	Orthogonal (User Equipment (UE) Pair) 432b		Non-Orthogonal	Non-Orthogonal
UE4 404d	Orthogonal (User Equipment (UE) Pair) 432a	Non-Orthogonal	Non-Orthogonal		Non-Orthogonal
UE5 404e	Non-Orthogonal	Non-Orthogonal	Non-Orthogonal	Non-Orthogonal	

FIG. 4

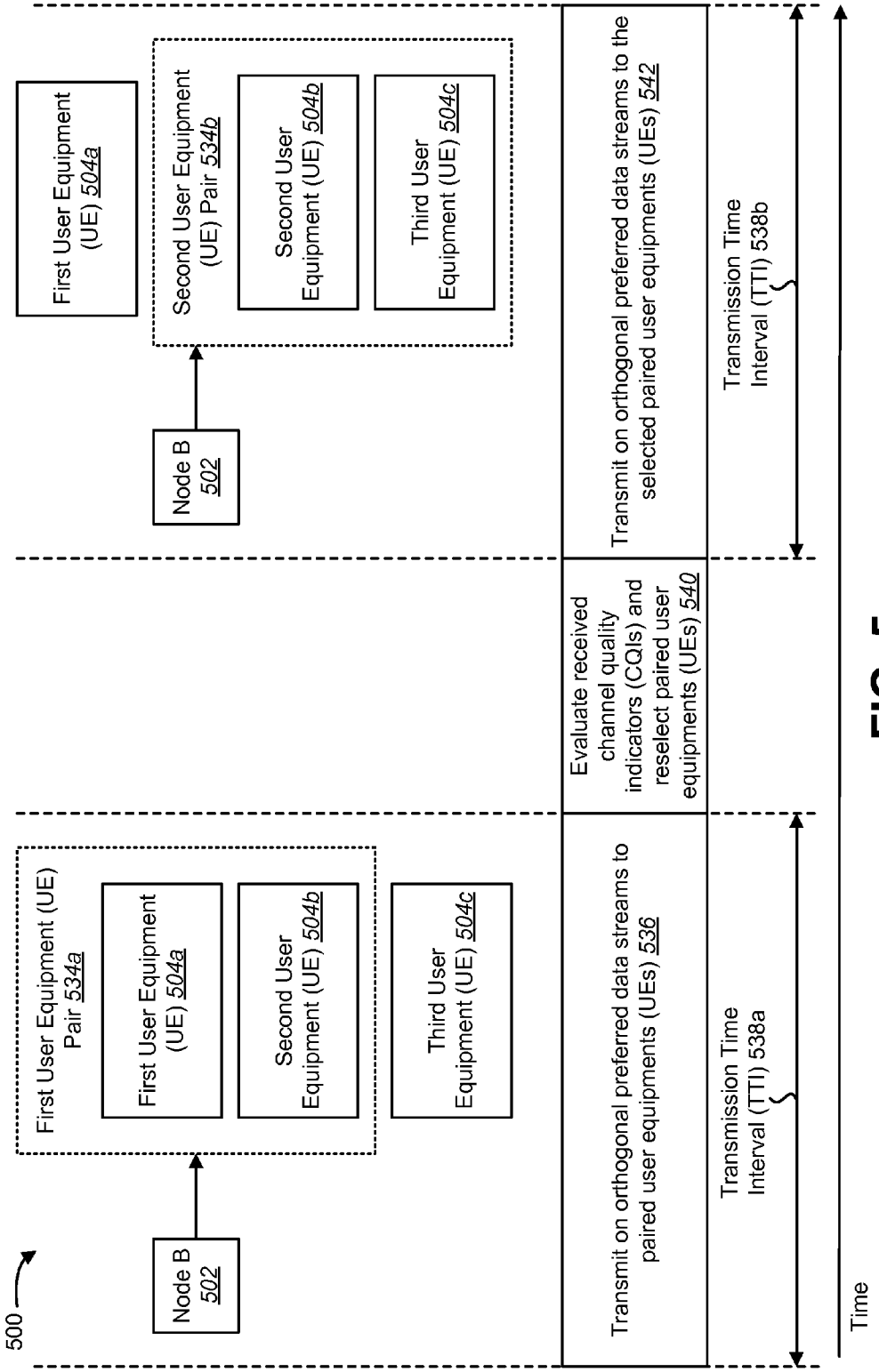
500
Node B 502
First User Equipment Pair 534a
First User Equipment (UE) 504a
Second User Equipment (UE) 504b
Third User Equipment (UE) 504c
Transmit on orthogonal preferred data streams to paired user equipments (UEs) 536
Transmission Time Interval (TTI) 538a
Evaluate received channel quality indicators (CQIs) and reselect paired user equipments (UEs) 540
Node B 502
First User Equipment (UE) 504a
Second User Equipment (UE) Pair 534b
Second User Equipment (UE) 504b
Third User Equipment (UE) 504c
Transmit on orthogonal preferred data streams to the selected paired user equipments (UEs) 542
Transmission Time Interval (TTI) 538b
Time

FIG. 5

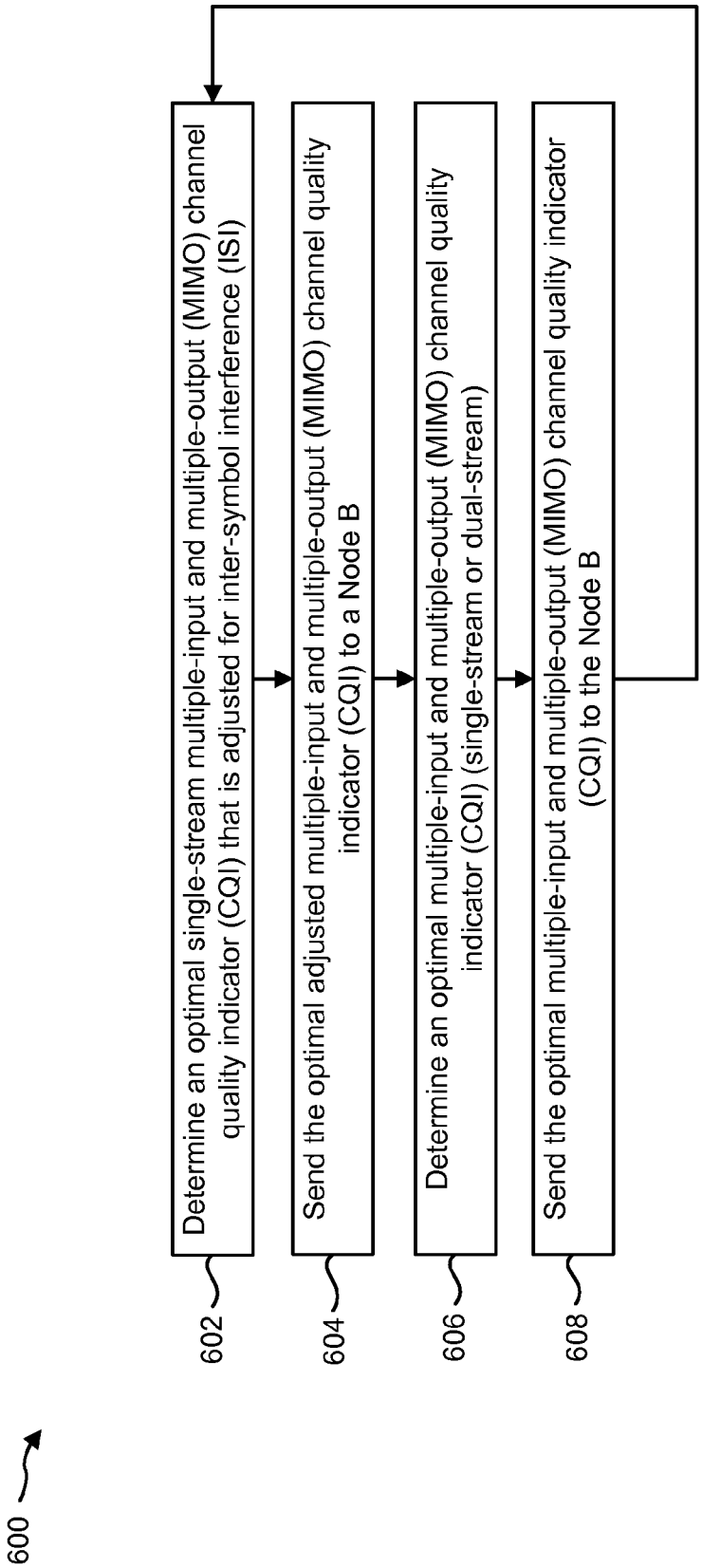
Determine an optimal single-stream multiple-input and multiple-output (MIMO) channel quality indicator (CQI) that is adjusted for inter-symbol interference (ISI)
Send the optimal adjusted multiple-input and multiple-output (MIMO) channel quality indicator (CQI) to a Node B
Determine an optimal multiple-input and multiple-output (MIMO) channel quality indicator (CQI) (single-stream or dual-stream)
Send the optimal multiple-input and multiple-output (MIMO) channel quality indicator (CQI) to the Node B
602
604
606
608
600

FIG. 6

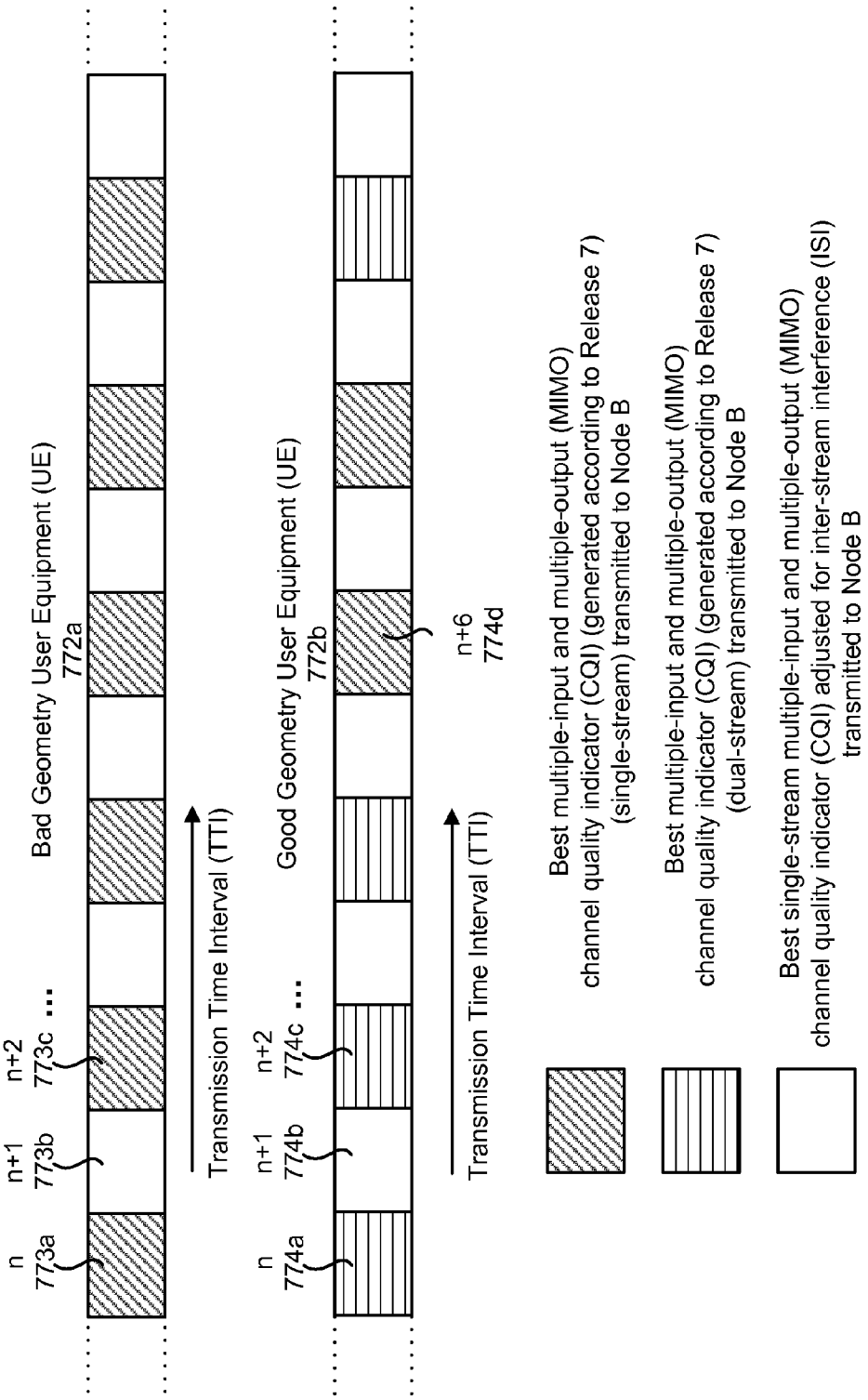
Bad Geometry User Equipment (UE)
772a
n
773a
n+1
773b
n+2
773c
...
Transmission Time Interval (TTI)
Good Geometry User Equipment (UE)
772b
n
774a
n+1
774b
n+2
774c
...
n+6
774d
Transmission Time Interval (TTI)
Best multiple-input and multiple-output (MIMO) channel quality indicator (CQI) (generated according to Release 7) (single-stream) transmitted to Node B
Best multiple-input and multiple-output (MIMO) channel quality indicator (CQI) (generated according to Release 7) (dual-stream) transmitted to Node B
Best single-stream multiple-input and multiple-output (MIMO) channel quality indicator (CQI) adjusted for inter-stream interference (ISI) transmitted to Node B

FIG. 7

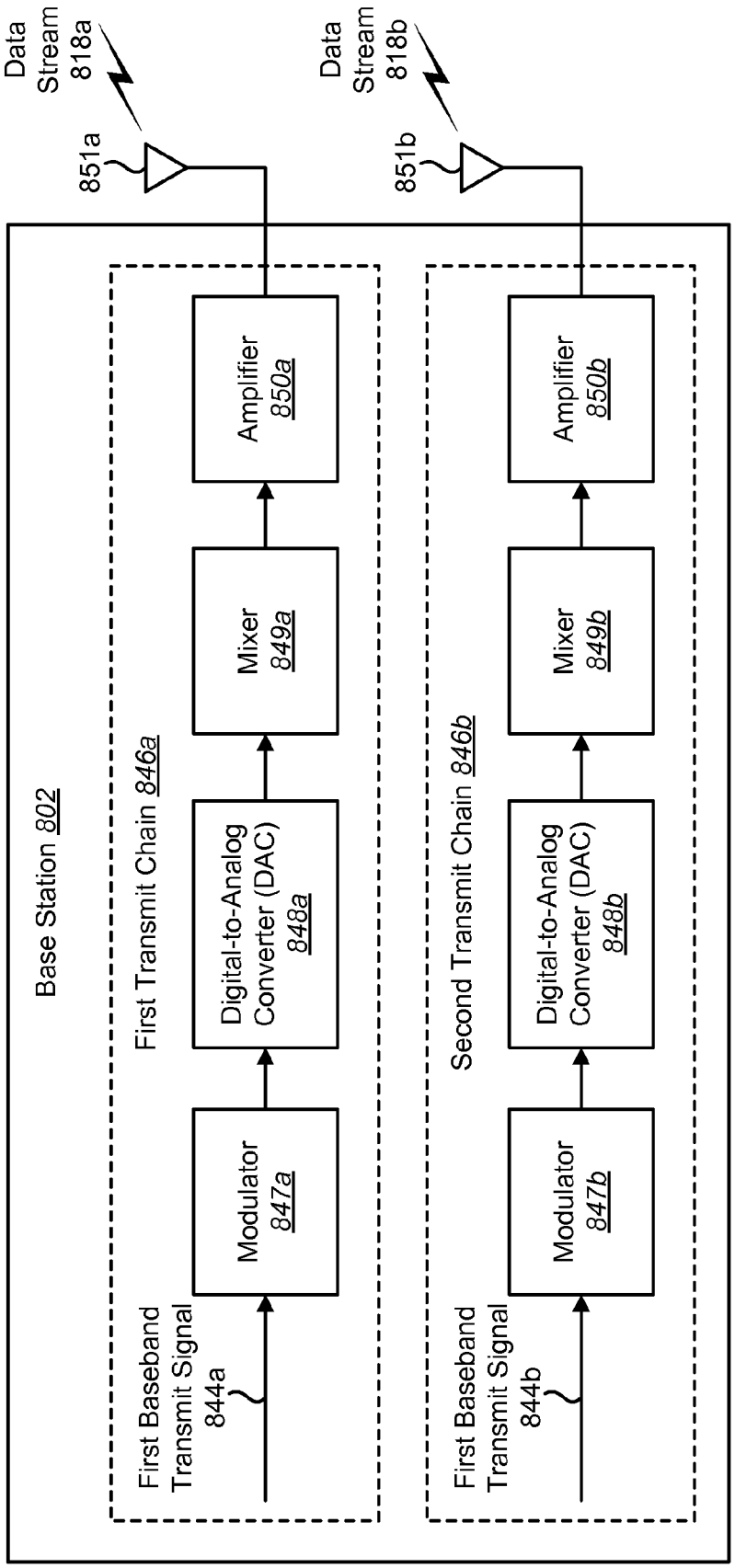
Base Station 802
First Transmit Chain 846a
Second Transmit Chain 846b
First Baseband Transmit Signal 844a
First Baseband Transmit Signal 844b
Modulator 847a
Modulator 847b
Digital-to-Analog Converter (DAC) 848a
Digital-to-Analog Converter (DAC) 848b
Mixer 849a
Mixer 849b
Amplifier 850a
Amplifier 850b
851a
851b
Data Stream 818a
Data Stream 818b

FIG. 8

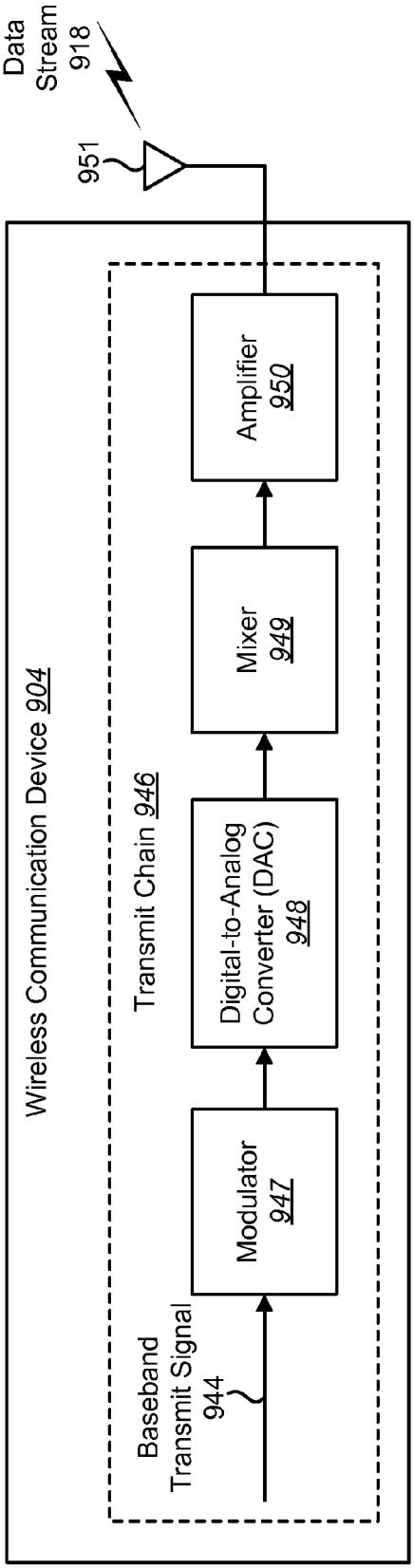
Wireless Communication Device 904
Transmit Chain 946
Baseband Transmit Signal 944
Modulator 947
Digital-to-Analog Converter (DAC) 948
Mixer 949
Amplifier 950
951
Data Stream 918

FIG. 9

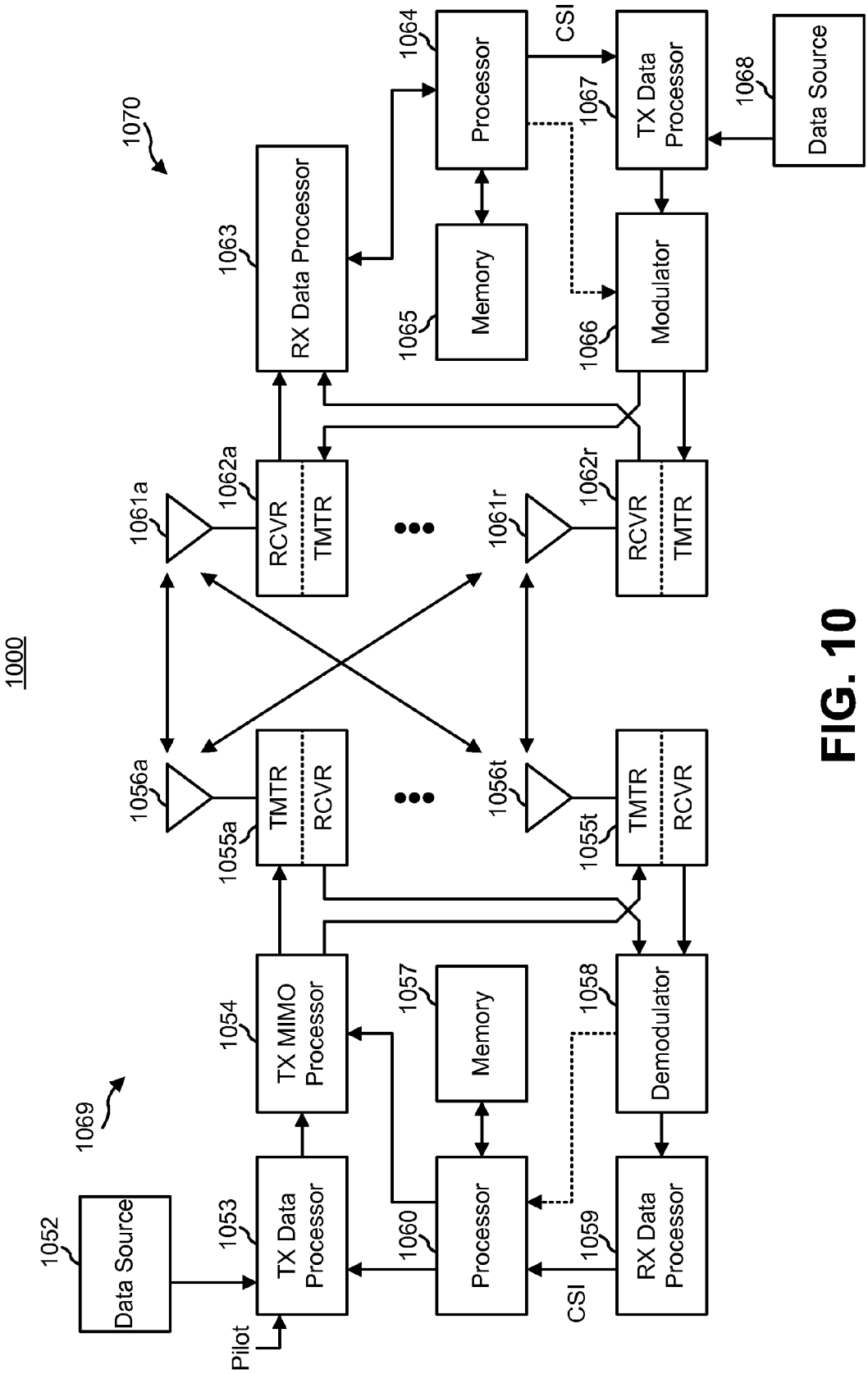
1000
1052
Data Source
1053
TX Data Processor
Pilot
1054
TX MIMO Processor
1069
1056a
1055a
TMTR
RCVR
1061a
1062a
RCVR
TMTR
1063
RX Data Processor
1070
1064
Processor
CSI
1065
Memory
1067
TX Data Processor
1068
Data Source
1066
Modulator
1056t
1055t
TMTR
RCVR
1061r
1062r
RCVR
TMTR
1060
Processor
1057
Memory
CSI
1059
RX Data Processor
1058
Demodulator

FIG. 10

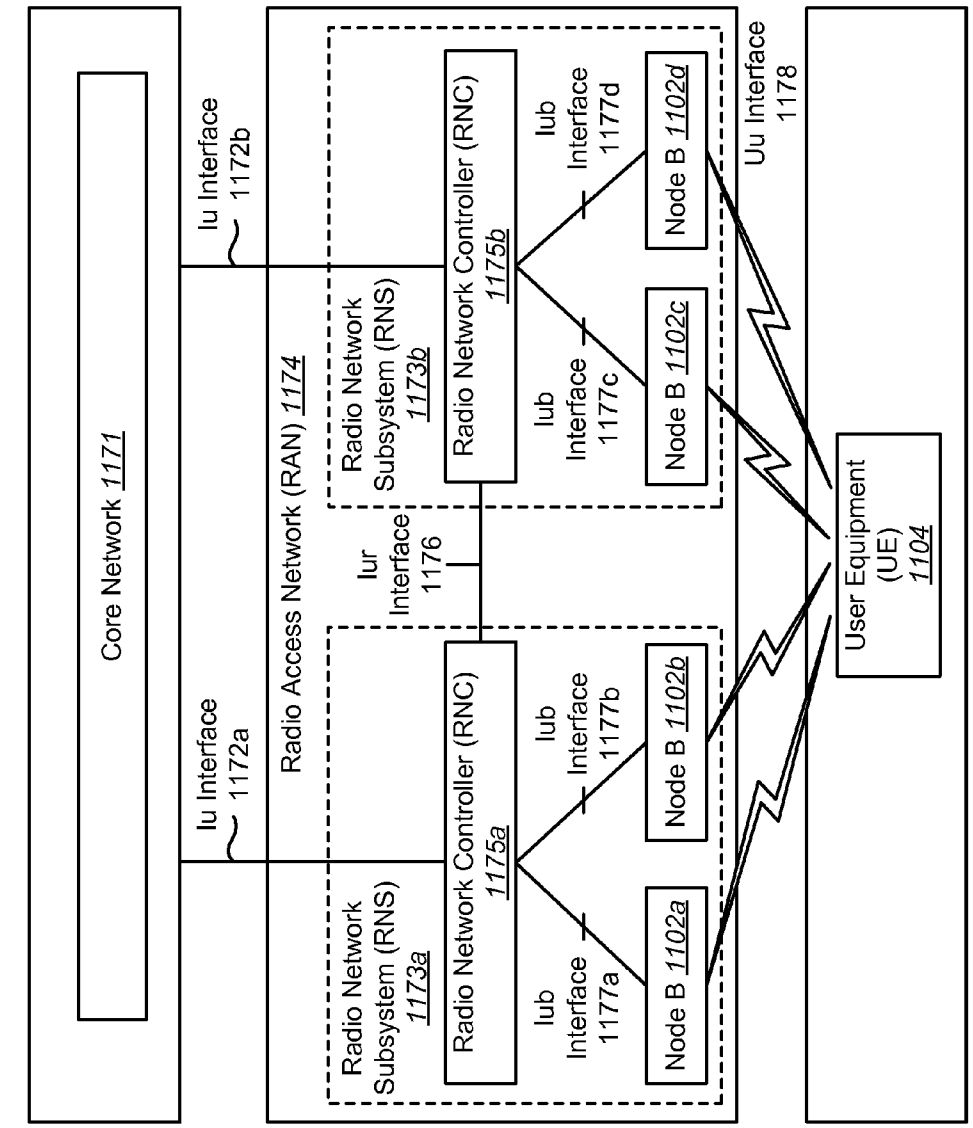
Core Network 1171
Iu Interface 1172a
Iu Interface 1172b
Radio Access Network (RAN) 1174
Radio Network Subsystem (RNS) 1173a
Radio Network Subsystem (RNS) 1173b
Radio Network Controller (RNC) 1175a
Radio Network Controller (RNC) 1175b
Iur Interface 1176
Iub Interface 1177a
Iub Interface 1177b
Iub Interface 1177c
Iub Interface 1177d
Node B 1102a
Node B 1102b
Node B 1102c
Node B 1102d
Uu Interface 1178
User Equipment (UE) 1104
1100

FIG. 11

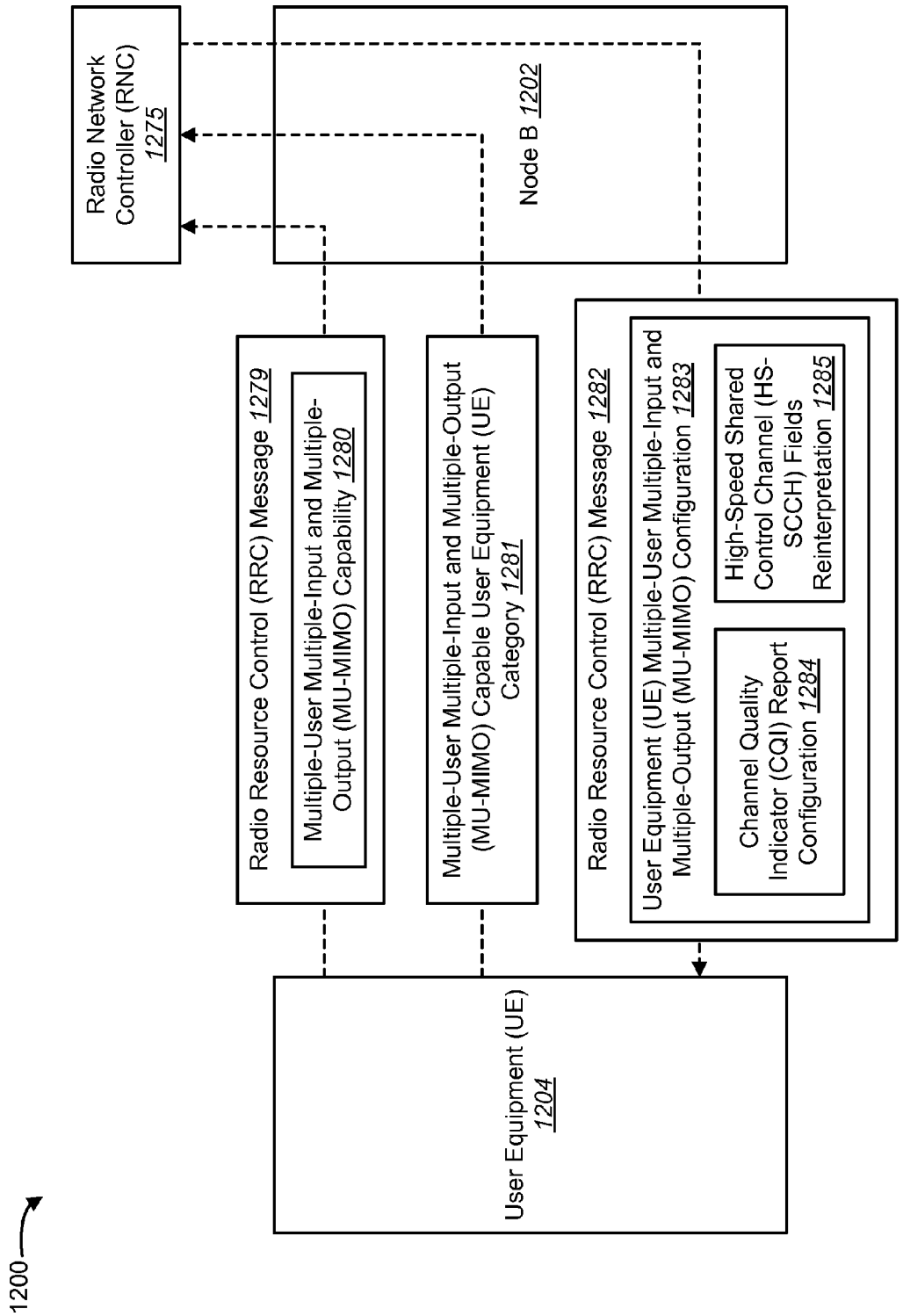
1200
Radio Network Controller (RNC) 1275
Node B 1202
Radio Resource Control (RRC) Message 1279
Multiple-User Multiple-Input and Multiple-Output (MU-MIMO) Capability 1280
Multiple-User Multiple-Input and Multiple-Output (MU-MIMO) Capable User Equipment (UE) Category 1281
Radio Resource Control (RRC) Message 1282
User Equipment (UE) Multiple-User Multiple-Input and Multiple-Output (MU-MIMO) Configuration 1283
Channel Quality Indicator (CQI) Report Configuration 1284
High-Speed Shared Control Channel (HS-SCCH) Fields Reinterpretation 1285
User Equipment (UE) 1204

FIG. 12

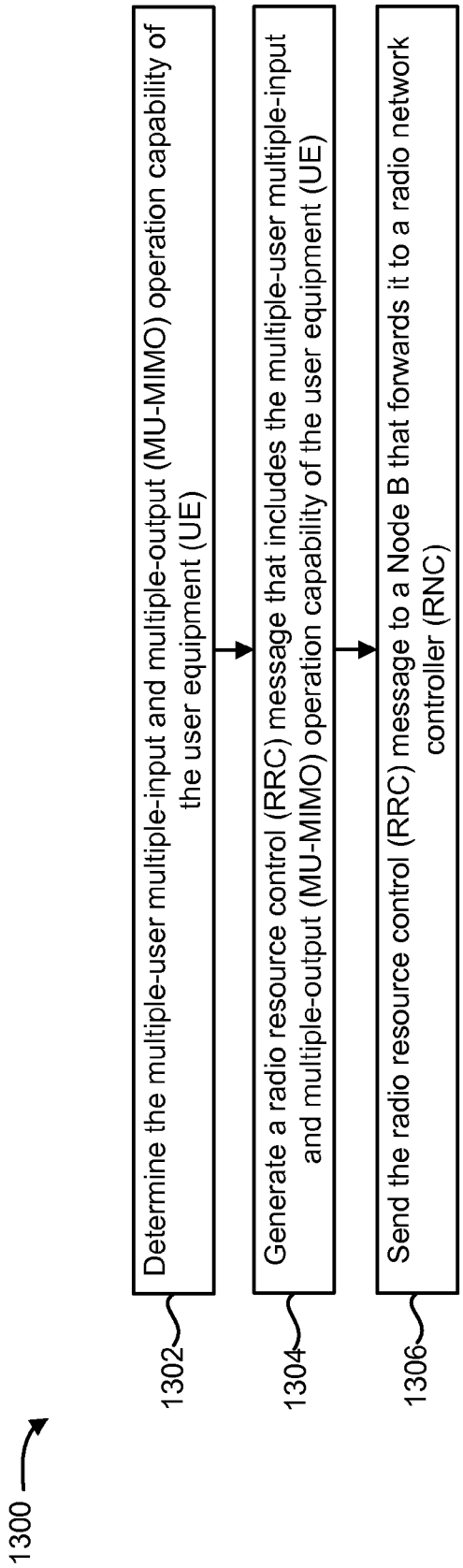
1300
1302
Determine the multiple-user multiple-input and multiple-output (MU-MIMO) operation capability of the user equipment (UE)
1304
Generate a radio resource control (RRC) message that includes the multiple-user multiple-input and multiple-output (MU-MIMO) operation capability of the user equipment (UE)
1306
Send the radio resource control (RRC) message to a Node B that forwards it to a radio network controller (RNC)

FIG. 13

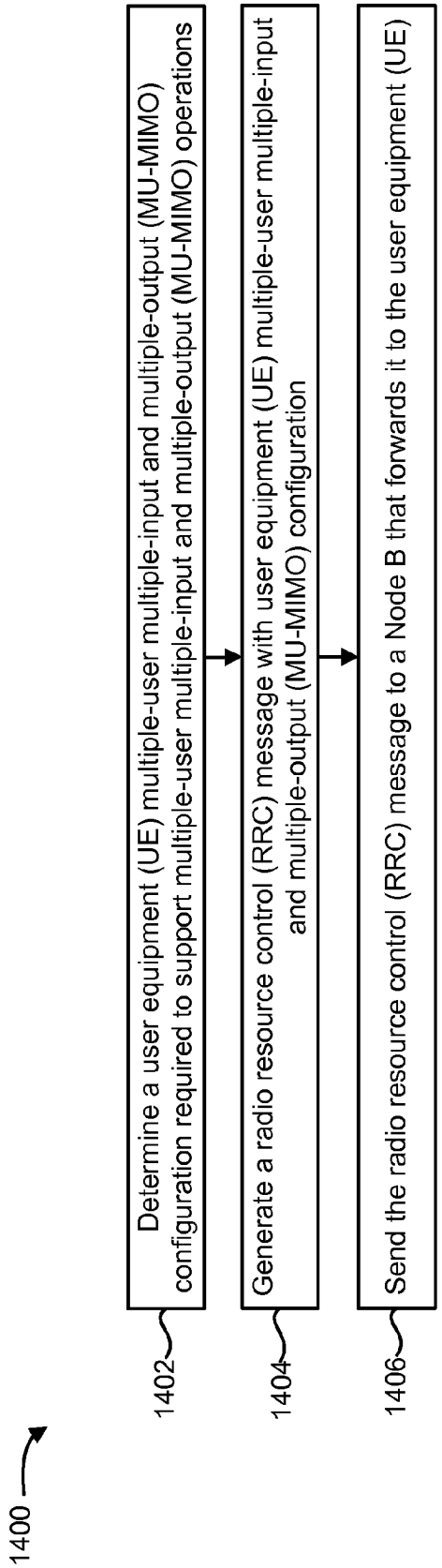
1400
1402
Determine a user equipment (UE) multiple-user multiple-input and multiple-output (MU-MIMO) configuration required to support multiple-user multiple-input and multiple-output (MU-MIMO) operations
1404
Generate a radio resource control (RRC) message with user equipment (UE) multiple-user multiple-input and multiple-output (MU-MIMO) configuration
1406
Send the radio resource control (RRC) message to a Node B that forwards it to the user equipment (UE)

FIG. 14

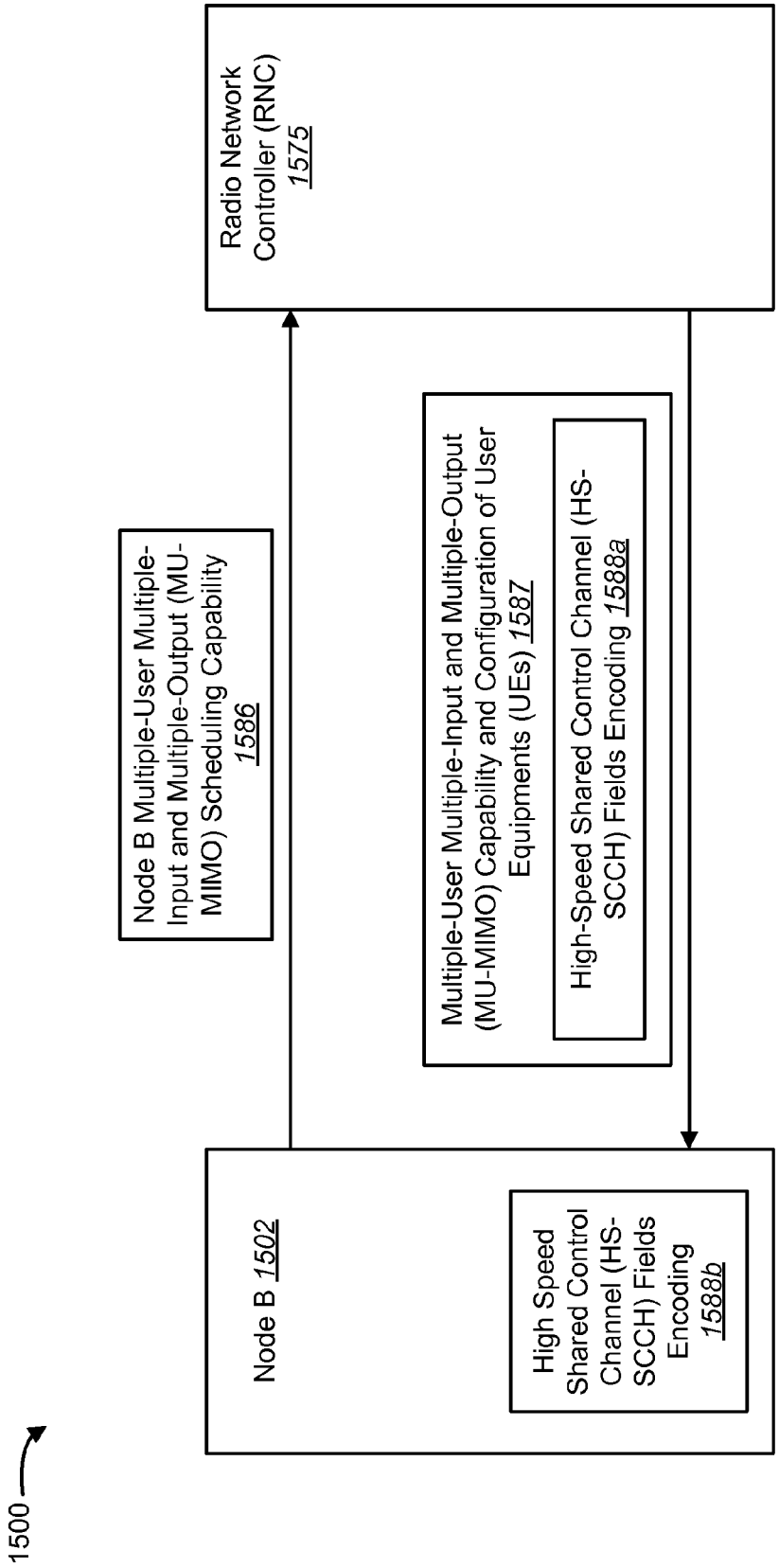
1500
Node B 1502
High Speed Shared Control Channel (HS-SCCH) Fields Encoding 1588b
Node B Multiple-User Multiple-Input and Multiple-Output (MU-MIMO) Scheduling Capability 1586
Multiple-User Multiple-Input and Multiple-Output (MU-MIMO) Capability and Configuration of User Equipments (UEs) 1587
High-Speed Shared Control Channel (HS-SCCH) Fields Encoding 1588a
Radio Network Controller (RNC) 1575

FIG. 15

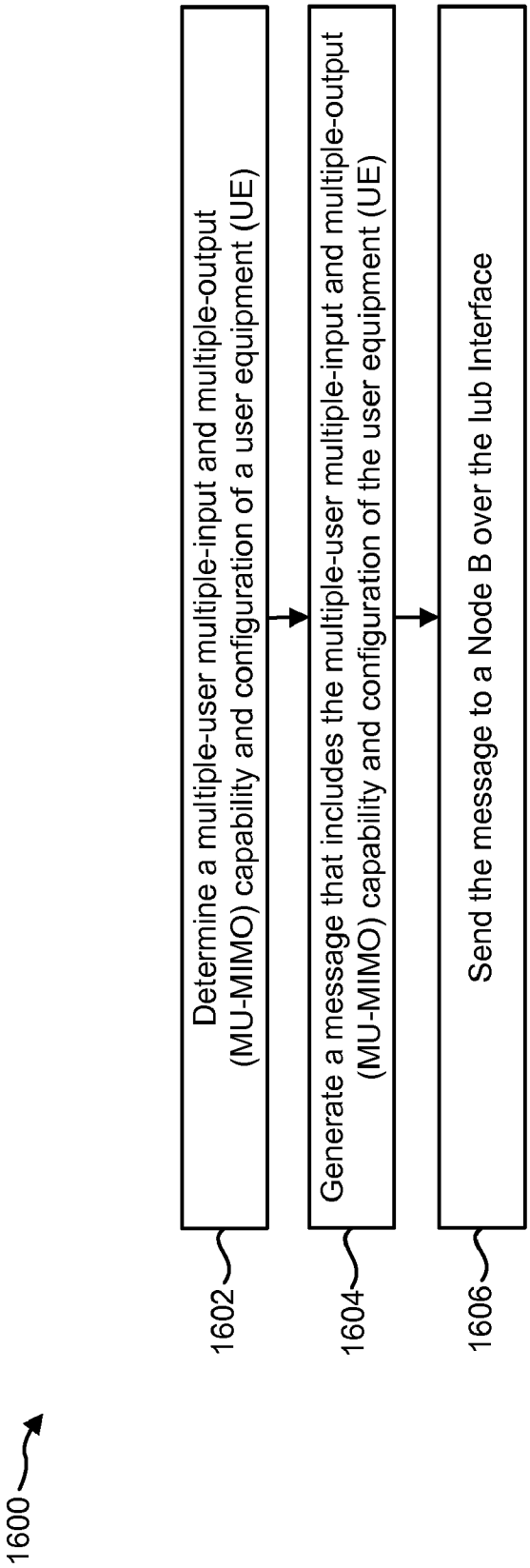
1600
1602
Determine a multiple-user multiple-input and multiple-output (MU-MIMO) capability and configuration of a user equipment (UE)
1604
Generate a message that includes the multiple-user multiple-input and multiple-output (MU-MIMO) capability and configuration of the user equipment (UE)
1606
Send the message to a Node B over the Iub Interface

FIG. 16

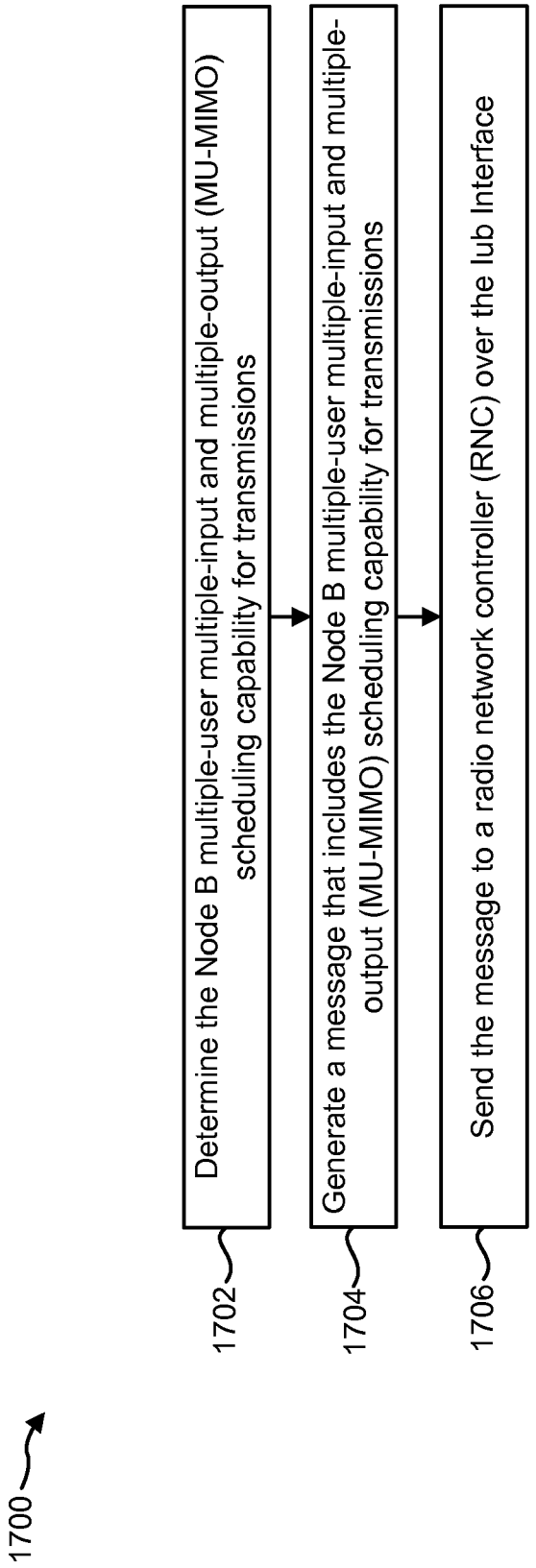
1700
1702
Determine the Node B multiple-user multiple-input and multiple-output (MU-MIMO) scheduling capability for transmissions
1704
Generate a message that includes the Node B multiple-user multiple-input and multiple-output (MU-MIMO) scheduling capability for transmissions
1706
Send the message to a radio network controller (RNC) over the Iub Interface

FIG. 17

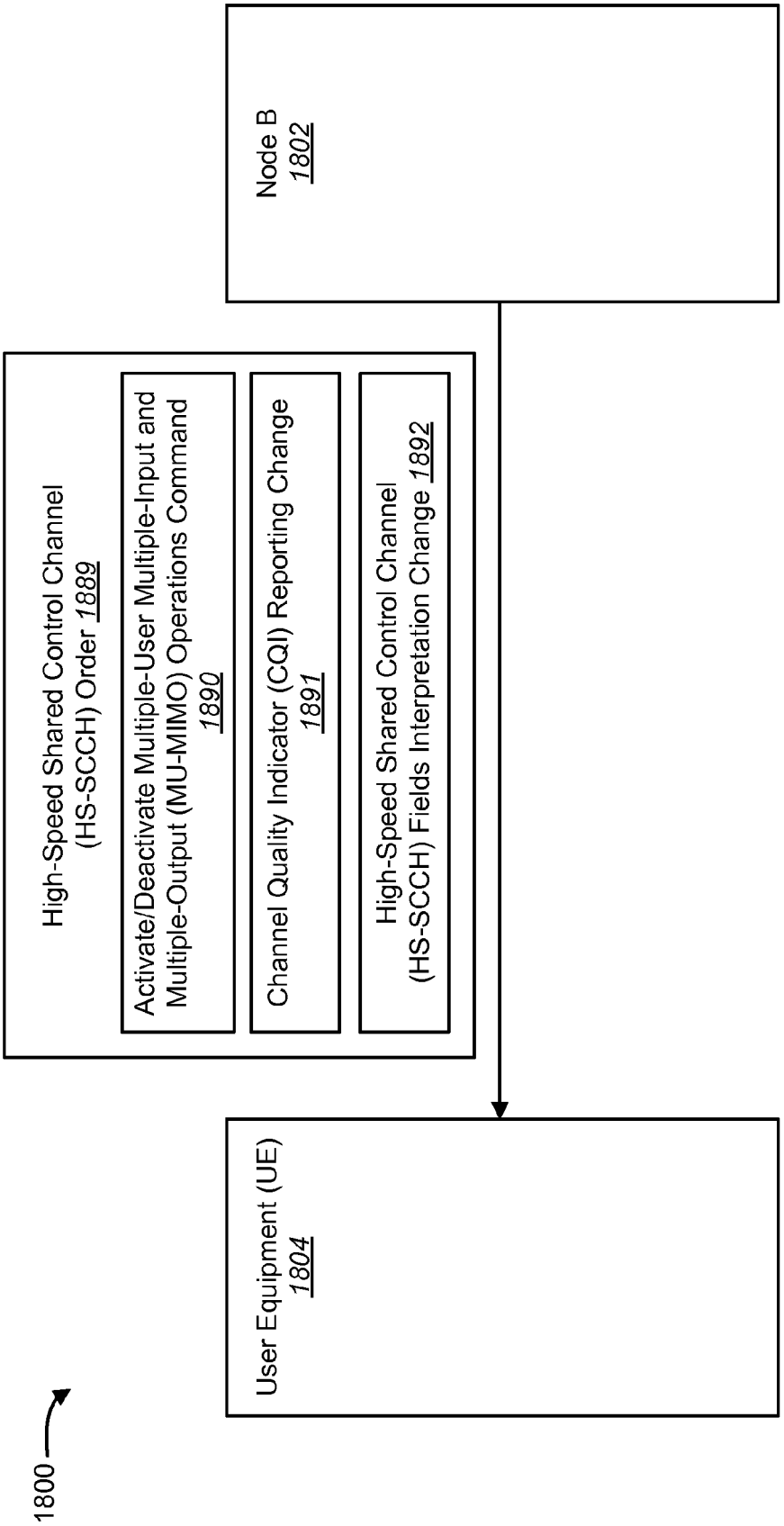
1800
User Equipment (UE)
1804
High-Speed Shared Control Channel
(HS-SCCH) Order 1889
Activate/Deactivate Multiple-User Multiple-Input and
Multiple-Output (MU-MIMO) Operations Command
1890
Channel Quality Indicator (CQI) Reporting Change
1891
High-Speed Shared Control Channel
(HS-SCCH) Fields Interpretation Change 1892
Node B
1802

FIG. 18

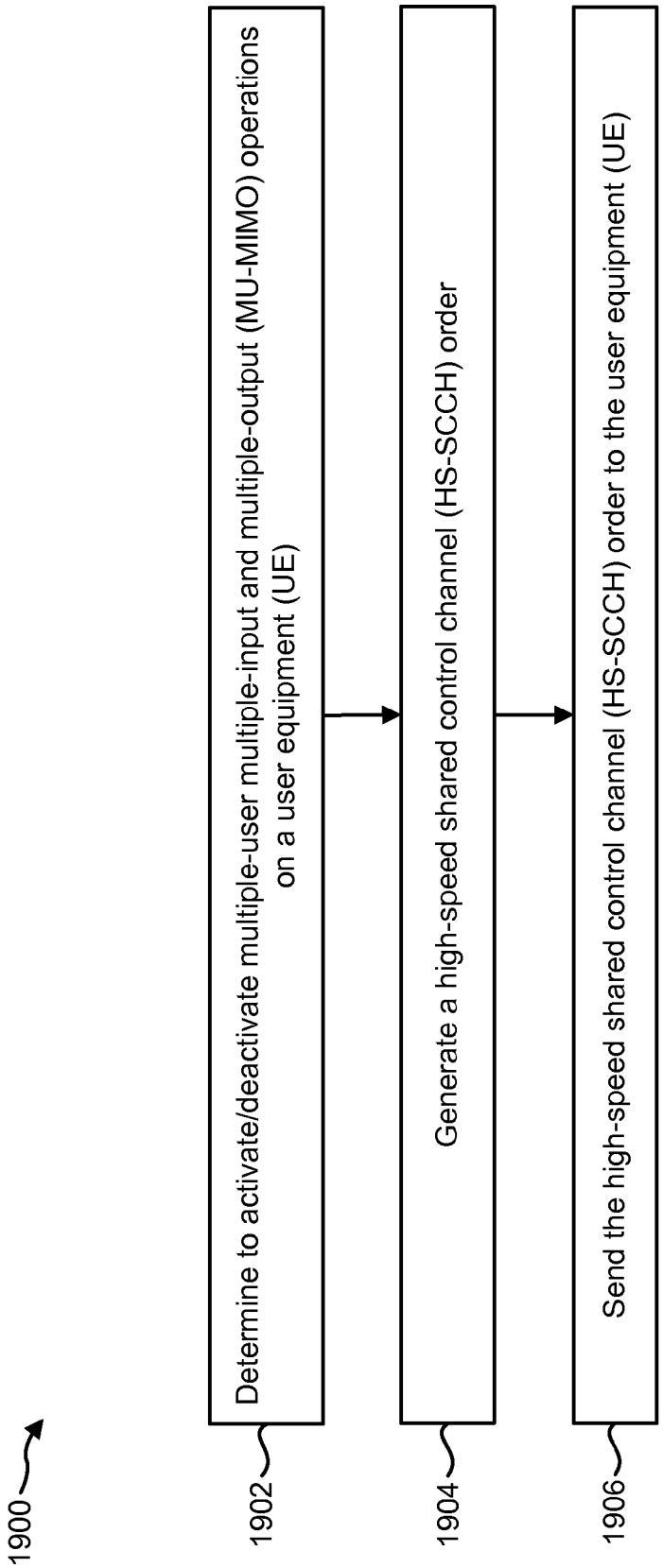
1900
1902
Determine to activate/deactivate multiple-user multiple-input and multiple-output (MU-MIMO) operations on a user equipment (UE)
1904
Generate a high-speed shared control channel (HS-SCCH) order
1906
Send the high-speed shared control channel (HS-SCCH) order to the user equipment (UE)

FIG. 19

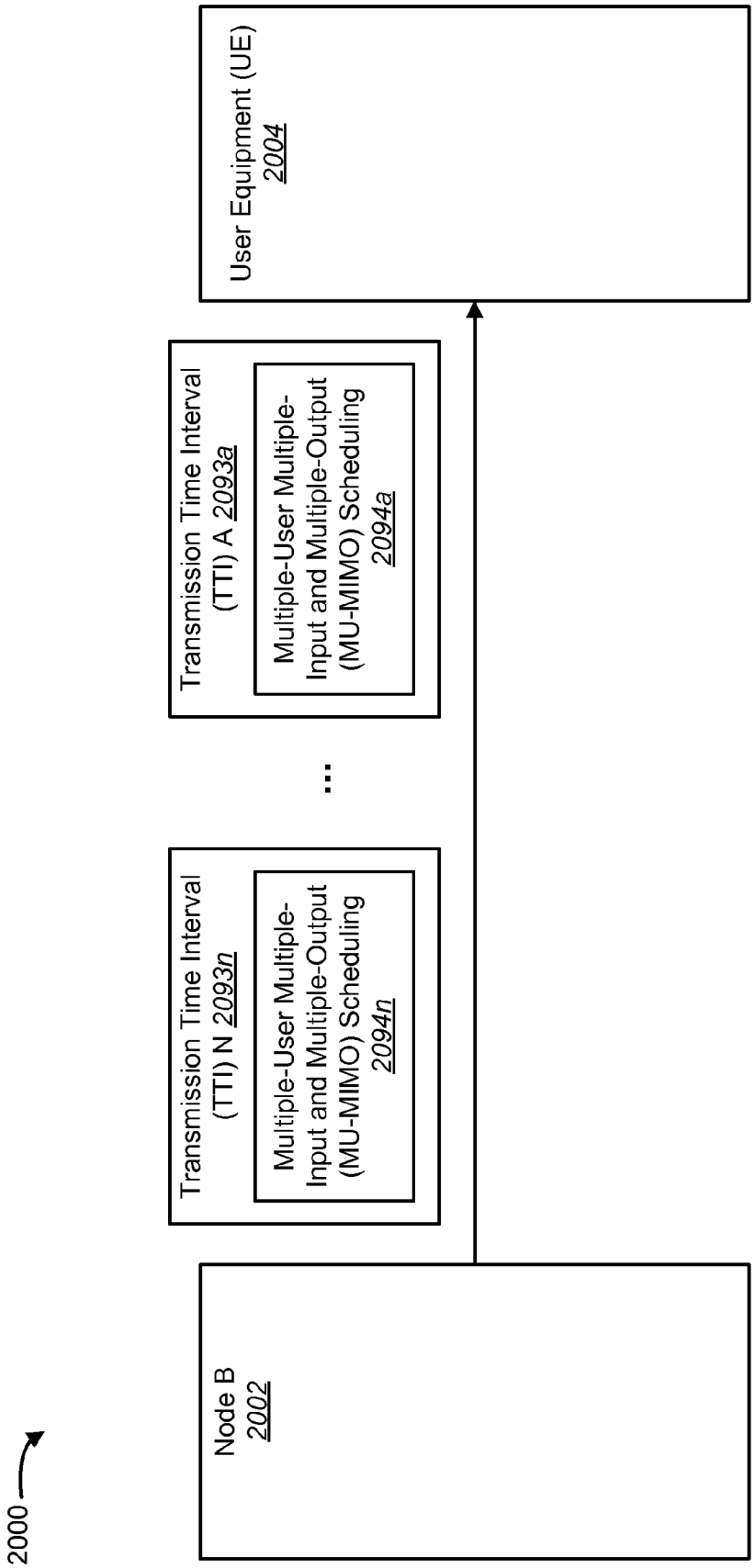
2000
Node B
2002
Transmission Time Interval (TTI) N 2093n
Multiple-User Multiple-Input and Multiple-Output (MU-MIMO) Scheduling 2094n
...
Transmission Time Interval (TTI) A 2093a
Multiple-User Multiple-Input and Multiple-Output (MU-MIMO) Scheduling 2094a
User Equipment (UE) 2004

FIG. 20

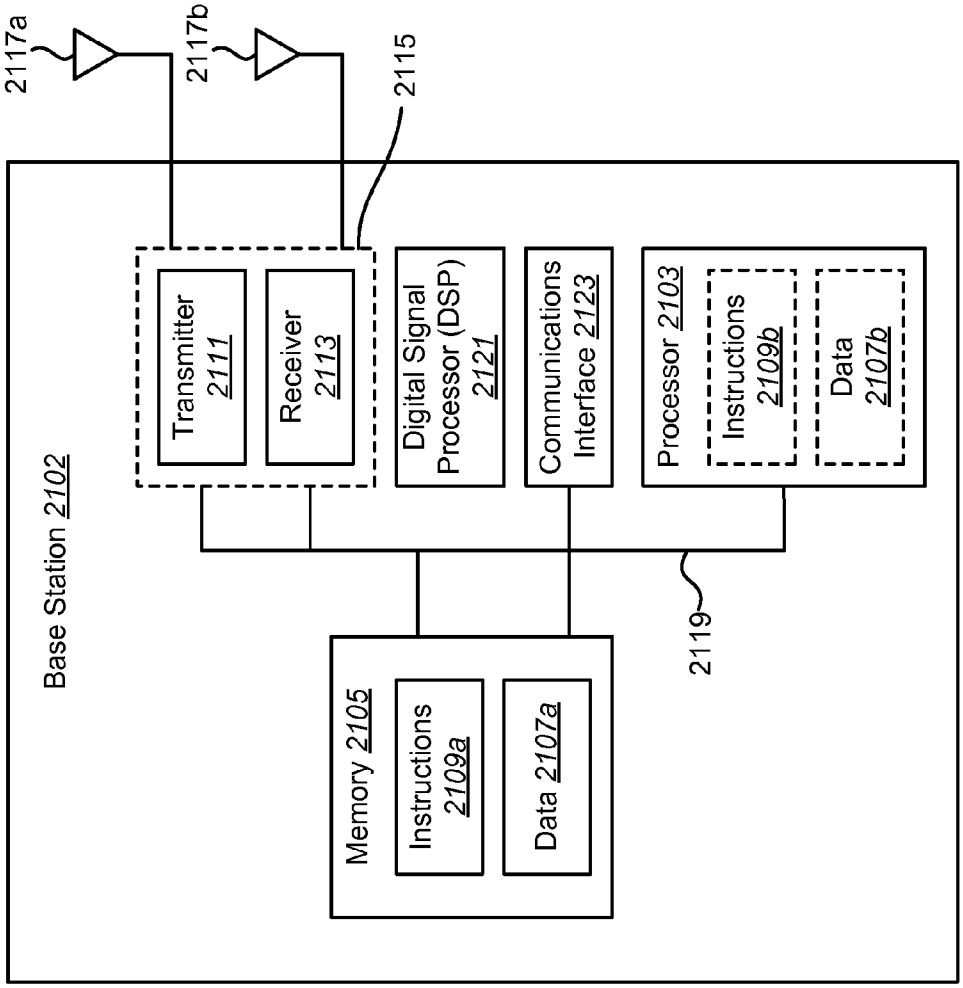
2117a
2117b
2115
Base Station 2102
Transmitter 2111
Receiver 2113
Digital Signal Processor (DSP) 2121
Communications Interface 2123
Processor 2103
Instructions 2109b
Data 2107b
2119
Memory 2105
Instructions 2109a
Data 2107a

FIG. 21

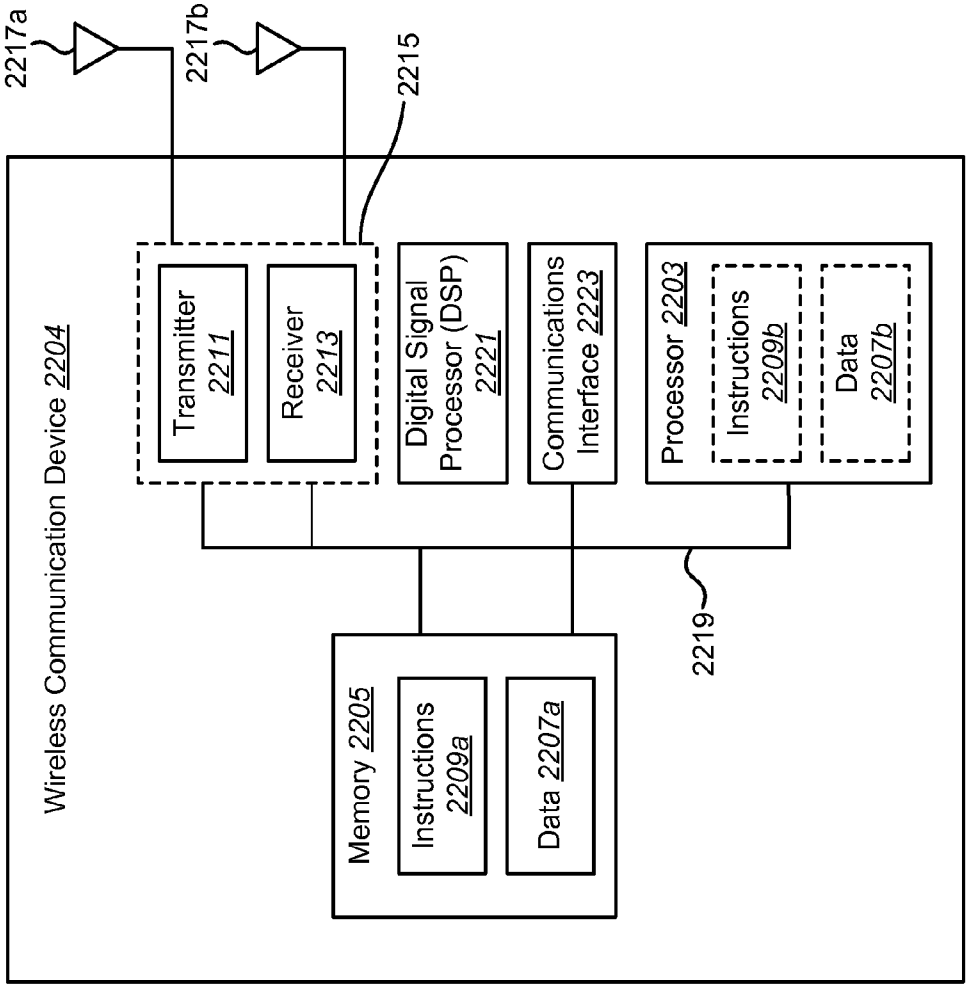
2217a
2217b
2215
Wireless Communication Device 2204
Transmitter 2211
Receiver 2213
Digital Signal Processor (DSP) 2221
Communications Interface 2223
Processor 2203
Instructions 2209b
Data 2207b
2219
Memory 2205
Instructions 2209a
Data 2207a

FIG. 22

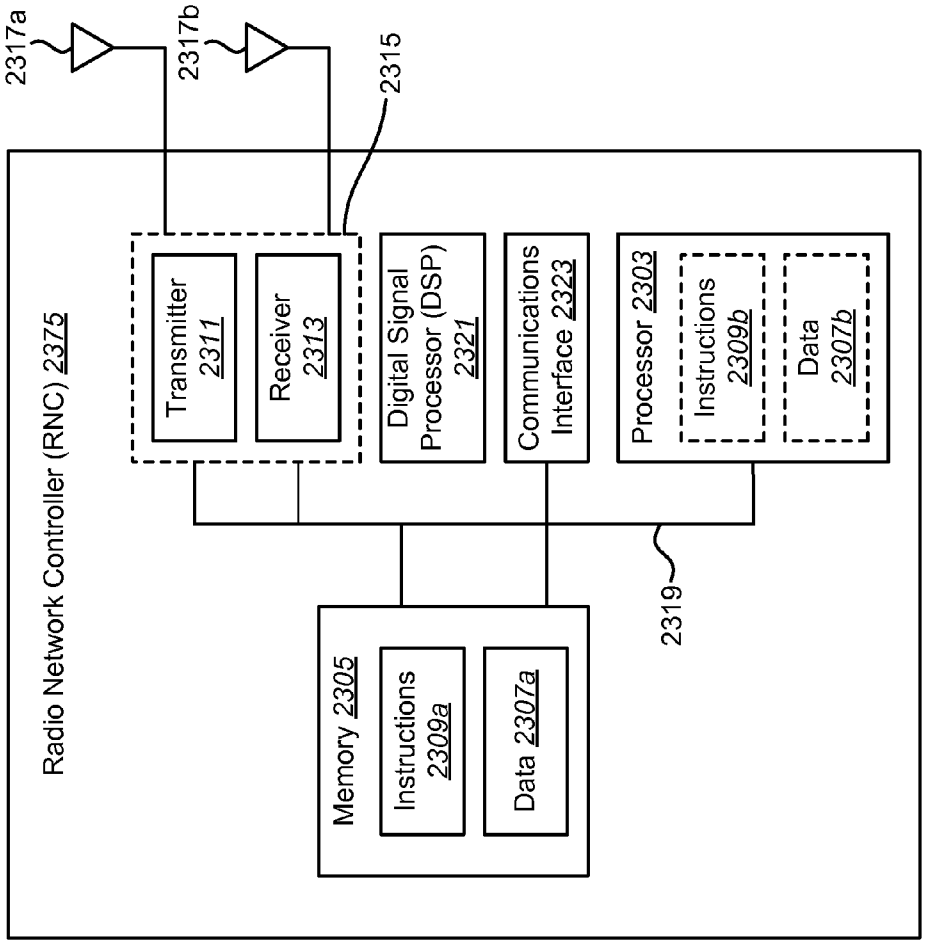
2317a
2317b
2315
Radio Network Controller (RNC) 2375
Transmitter 2311
Receiver 2313
Digital Signal Processor (DSP) 2321
Communications Interface 2323
Processor 2303
Instructions 2309b
Data 2307b
2319
Memory 2305
Instructions 2309a
Data 2307a

FIG. 23

SIGNALLING OF MULTIPLE-USER MULTIPLE-INPUT AND MULTIPLE-OUTPUT TRANSMISSIONS IN HIGH-SPEED PACKET ACCESS SYSTEMS

RELATED APPLICATIONS

[0001] This application is related to and claims priority from U.S. Provisional Patent Application Ser. No. 61/262,115, filed Nov. 17, 2009, for "SIGNALING OF MU-MIMO TRANSMISSIONS FROM NODE-B."

TECHNICAL FIELD

[0002] The present disclosure relates generally to wireless communication systems. More specifically, the present disclosure relates to systems and methods for signaling of multiple-user multiple-input and multiple-output (MU-MIMO) transmissions in high-speed packet access (HSPA) systems.

BACKGROUND

[0003] Wireless communication systems are widely deployed to provide various types of communication content such as voice, video, data, and so on. These systems may be multiple-access systems capable of supporting simultaneous communication of multiple terminals with one or more base stations.

[0004] A problem that must be dealt with in all communication systems is fading or other interference. There may be problems with decoding the signals received. One way to deal with these problems is by utilizing beamforming. With beamforming, instead of using each transmit antenna to transmit a spatial stream, the transmit antennas each transmit a linear combination of the spatial streams, with the combination being chosen so as to optimize the response at the receiver.

[0005] Smart antennas are arrays of antenna elements, each of which receive a signal to be transmitted with a predetermined phase offset and relative gain. The net effect of the array is to direct a (transmit or receive) beam in a predetermined direction. The beam is steered by controlling the phase and gain relationships of the signals that excite the elements of the array. Thus, smart antennas direct a beam to each individual mobile unit (or multiple mobile units) as opposed to radiating energy to all mobile units within a predetermined coverage area (e.g., 120°) as conventional antennas typically do. Smart antennas increase system capacity by decreasing the width of the beam directed at each mobile unit and thereby decreasing interference between mobile units. Such reductions in interference result in increases in signal-to-interference and signal-to-noise ratios that improve performance and/or capacity. In power controlled systems, directing narrow beam signals at each mobile unit also results in a reduction in the transmit power required to provide a given level of performance.

[0006] Wireless communication systems may use beamforming to provide system-wide gains. In beamforming, multiple antennas on the transmitter may steer the direction of transmissions towards multiple antennas on the receiver. Beamforming may reduce the signal-to-noise ratio (SNR). Beamforming may also decrease the amount of interference received by terminals in neighboring cells. Benefits may be realized by providing improved beamforming techniques.

SUMMARY

[0007] A method for signaling multiple-user multiple-input and multiple-output in a high speed packet access system is described. A multiple-user multiple-input and multiple-output parameter is determined. A message that includes the multiple-user multiple-input and multiple-output parameter is generated. The message is sent to a wireless device.

[0008] The method may be performed by a radio network controller. The wireless device may be a Node B that forwards the message to a user equipment. The multiple-user multiple-input and multiple-output parameter may include a user equipment multiple-user multiple-input and multiple-output configuration required of the user equipment to support multiple-user multiple-input and multiple-output operations. The message may be a radio resource control message.

[0009] The multiple-user multiple-input and multiple-output parameter may also include a channel quality indicator report configuration. The multiple-user multiple-input and multiple-output parameter may further include a high-speed shared control channel fields reinterpretation. The method may be performed by a user equipment. The wireless device may then be a Node B that forwards the message to a radio network controller.

[0010] The multiple-user multiple-input and multiple-output parameter may include a multiple-user multiple-input and multiple-output operation capability of the user equipment. The message may be a radio resource control message. The multiple-user multiple-input and multiple-output parameter may include a multiple-user multiple-input and multiple-output capable user equipment category.

[0011] The method may be performed by a Node B. The wireless device may be a radio network controller. The multiple-user multiple-input and multiple-output parameter may include a Node B multiple-user multiple-input and multiple-output scheduling capability.

[0012] The multiple-user multiple-input and multiple-output parameter may include a multiple-user multiple-input and multiple-output capability and configuration of a user equipment being served by the Node B. The multiple-user multiple-input and multiple-output parameter may also include a new high-speed shared control channel fields encoding.

[0013] The wireless device may be a user equipment. The multiple-user multiple-input and multiple-output parameter may include multiple-user multiple-input and multiple-output scheduling information that is sent for each transmission time interval. The multiple-user multiple-input and multiple-output scheduling information may be sent via a high-speed shared control channel on a common high speed downlink shared channel—radio network temporary identifier, via certain bits of a channelization code set of a high-speed shared control channel or via a Type-3 dual stream high-speed shared control channel with a secondary transport block size set to 111111 and a corresponding redundancy version set to 0.

[0014] The user equipment may be transmit antenna array capable. The multiple-user multiple-input and multiple-output scheduling information may be sent via a combination of a modulation scheme and a number of transport blocks in a high-speed shared control channel. The multiple-user multiple-input and multiple-output scheduling information may also be sent via a hybrid automatic repeat request processing identification in a high-speed shared control channel.

[0015] The multiple-user multiple-input and multiple-output parameter may include a command to activate/deactivate multiple-user multiple-input and multiple-output operations on the user equipment. The message may be a high-speed shared control channel order. The high-speed shared control channel order may include a channel quality indicator reporting change for the user equipment or a high-speed shared control channel fields interpretation change for the user equipment.

[0016] A wireless device configured for signaling multiple-user multiple-input and multiple-output in a high speed packet access system is also described. The wireless device includes a processor, memory in electronic communication with the processor and instructions stored in the memory. The instructions are executable by the processor to determine a multiple-user multiple-input and multiple-output parameter. The instructions are also executable by the processor to generate a message that includes the multiple-user multiple-input and multiple-output parameter. The instructions are further executable by the processor to send the message to a second wireless device.

[0017] A wireless device configured for signaling multiple-user multiple-input and multiple-output in a high speed packet access system is described. The wireless device includes means for determining a multiple-user multiple-input and multiple-output parameter. The wireless device also includes means for generating a message that includes the multiple-user multiple-input and multiple-output parameter. The wireless device further includes means for sending the message to a wireless device.

[0018] A computer-program product for signaling multiple-user multiple-input and multiple-output in a high-speed packet access system is also described. The computer-program product includes a non-transitory computer-readable medium having instructions thereon. The instructions include code for causing a first wireless device to determine a multiple-user multiple-input and multiple-output parameter. The instructions also include code for causing a first wireless device to generate a message that comprises the multiple-user multiple-input and multiple-output parameter. The instructions further include code for causing the first wireless device to send the message to a second wireless device.

BRIEF DESCRIPTION OF THE DRAWINGS

[0019] FIG. **1** shows a wireless communication system with multiple wireless devices;

[0020] FIG. **2** shows another wireless communication system with multiple wireless devices;

[0021] FIG. **3** is a flow diagram of a method for adjusting a data rate to account for inter-stream interference (ISI) in both single-user multiple-input and multiple-output (SU-MIMO) transmissions and multiple-user multiple-input and multiple-output (MU-MIMO) transmissions;

[0022] FIG. **4** is a block diagram illustrating a comparison table for pairing user equipments (UEs);

[0023] FIG. **5** is a block diagram illustrating a timeline with multiple transmission time intervals (TTIs);

[0024] FIG. **6** is a flow diagram of a method for sending channel quality indicator (CQI) feedback that accounts for inter-stream interference (ISI);

[0025] FIG. **7** is a timing diagram illustrating channel quality indicator (CQI) feedback cycles for user equipments (UEs);

[0026] FIG. **8** is a block diagram of a base station for use in the present systems and methods;

[0027] FIG. **9** is a block diagram of a wireless communication device for use in the present systems and methods;

[0028] FIG. **10** is a block diagram of a transmitter and receiver in a multiple-input and multiple-output (MIMO) system;

[0029] FIG. **11** is a block diagram illustrating a radio network operating according to Universal Mobile Telecommunications System (UMTS) standards;

[0030] FIG. **12** is a block diagram illustrating communications between a user equipment (UE), a Node B and a radio network controller (RNC) in a wireless communications network;

[0031] FIG. **13** is a flow diagram of a method for signaling a user equipment's (UE's) multiple-user multiple-input and multiple-output (MU-MIMO) operation capability from a user equipment (UE) to a radio network controller (RNC);

[0032] FIG. **14** is a flow diagram of a method for signaling a user equipment (UE) multiple-user multiple-input and multiple-output (MU-MIMO) configuration required to support multiple-user multiple-input and multiple-output (MU-MIMO) operations from a network to a user equipment (UE);

[0033] FIG. **15** is a block diagram illustrating communications between a Node B and a radio network controller (RNC) in a wireless communications network;

[0034] FIG. **16** is a flow diagram of a method for signaling the multiple-user multiple-input and multiple-output (MU-MIMO) capability and configuration of a user equipment (UE) from a radio network controller (RNC) to a Node B;

[0035] FIG. **17** is a flow diagram of a method for signaling a Node B multiple-user multiple-input and multiple-output (MU-MIMO) scheduling capability to a radio network controller (RNC);

[0036] FIG. **18** is a block diagram illustrating the transmission of a high-speed shared control channel (HS-SCCH) order from a Node B to a user equipment (UE) in a wireless communications network;

[0037] FIG. **19** is a flow diagram of a method for sending a high-speed shared control channel (HS-SCCH) order to a user equipment (UE);

[0038] FIG. **20** is a block diagram illustrating multiple-user multiple-input and multiple-output (MU-MIMO) scheduling transmitted from a Node B to a user equipment (UE) for every transmission time interval (TTI) in a wireless communications network;

[0039] FIG. **21** illustrates certain components that may be included within a base station;

[0040] FIG. **22** illustrates certain components that may be included within a wireless communication device; and

[0041] FIG. **23** illustrates certain components that may be included within a radio network controller (RNC).

DETAILED DESCRIPTION

[0042] The 3rd Generation Partnership Project (3GPP) is a collaboration between groups of telecommunications associations that aims to define a globally applicable 3rd generation (3G) mobile phone specification. 3GPP Long Term Evolution (LTE) is a 3GPP project aimed at improving the Universal Mobile Telecommunications System (UMTS) mobile phone standard. The 3GPP may define specifications for the next generation of mobile networks, mobile systems and mobile devices. In 3GPP LTE, a mobile station or device may be referred to as a "user equipment" (UE).

[0043] FIG. **1** shows a wireless communication system **100** with multiple wireless devices. Wireless communication systems **100** are widely deployed to provide various types of communication content such as voice, data, and so on. A wireless device may be a base station **102** or a wireless communication device **104**.

[0044] A base station **102** is a station that communicates with one or more wireless communication devices **104**. A base station **102** may also be referred to as, and may include some or all of the functionality of, an access point, a broadcast transmitter, a NodeB, an evolved NodeB, etc. The term "Base Station" will be used herein. Each base station **102** provides communication coverage for a particular geographic area. A base station **102** may provide communication coverage for one or more wireless communication devices **104**. The term "cell" can refer to a base station **102** and/or its coverage area depending on the context in which the term is used.

[0045] Communications in a wireless system (e.g., a multiple-access system) may be achieved through transmissions over a wireless link. Such a communication link may be established via a single-input and single-output (SISO), multiple-input and single-output (MISO) or a multiple-input and multiple-output (MIMO) system. A MIMO system includes transmitter(s) and receiver(s) equipped, respectively, with multiple (NT) transmit antennas and multiple (NR) receive antennas for data transmission. SISO and MISO systems are particular instances of a MIMO system. The MIMO system can provide improved performance (e.g., higher throughput, greater capacity or improved reliability) if the additional dimensionalities created by the multiple transmit and receive antennas are utilized.

[0046] The wireless communication system **100** may utilize MIMO. A MIMO system may support both time division duplex (TDD) and frequency division duplex (FDD) systems. In a TDD system, uplink **108***a-b* and downlink **106***a-b* transmissions are on the same frequency region so that the reciprocity principle allows the estimation of the downlink **106** channel from the uplink **108** channel. This enables a transmitting wireless device to extract transmit beamforming gain from communications received by the transmitting wireless device.

[0047] The wireless communication system **100** may be a multiple-access system capable of supporting communication with multiple wireless communication devices **104** by sharing the available system resources (e.g., bandwidth and transmit power). Examples of such multiple-access systems include code division multiple access (CDMA) systems, wideband code division multiple access (W-CDMA) systems, time division multiple access (TDMA) systems, frequency division multiple access (FDMA) systems, orthogonal frequency division multiple access (OFDMA) systems, single-carrier frequency division multiple access (SC-FDMA) systems, 3rd Generation Partnership Project (3GPP) Long Term Evolution (LTE) systems and spatial division multiple access (SDMA) systems.

[0048] The terms "networks" and "systems" are often used interchangeably. A CDMA network may implement a radio technology such as Universal Terrestrial Radio Access (UTRA), cdma2000, etc. UTRA includes W-CDMA and Low Chip Rate (LCR) while cdma2000 covers IS-2000, IS-95 and IS-856 standards. A TDMA network may implement a radio technology such as Global System for Mobile Communications (GSM). An OFDMA network may implement a radio technology such as Evolved UTRA (E-UTRA), IEEE 802.11, IEEE 802.16, IEEE 802.20, Flash-OFDMA, etc. UTRA, E-UTRA, and GSM are part of Universal Mobile Telecommunication System (UMTS). Long Term Evolution (LTE) is a release of UMTS that uses E-UTRA. UTRA, E-UTRA, GSM, UMTS and LTE are described in documents from an organization named "3rd Generation Partnership Project" (3GPP). cdma2000 is described in documents from an organization named "3rd Generation Partnership Project 2" (3GPP2). For clarity, certain aspects of the techniques are described below for LTE, and LTE terminology is used in much of the description below.

[0049] A base station **102** may communicate with one or more wireless communication devices **104**. For example, the base station **102** may communicate with a first wireless communication device **104***a* and a second wireless communication device **104***b*. A wireless communication device **104** may also be referred to as, and may include some or all of the functionality of, a terminal, an access terminal, a user equipment (UE), a subscriber unit, a station, etc. A wireless communication device **104** may be a cellular phone, a personal digital assistant (PDA), a wireless device, a wireless modem, a handheld device, a laptop computer, etc.

[0050] A wireless communication device **104** may communicate with zero, one, or multiple base stations **102** on the downlink **106** and/or uplink **108** at any given moment. The downlink **106** (or forward link) refers to the communication link from a base station **102** to a wireless communication device **104**, and the uplink **108** (or reverse link) refers to the communication link from a wireless communication device **104** to a base station **102**.

[0051] 3GPP Release 5 and later supports High-Speed Downlink Packet Access (HSDPA). 3GPP Release 6 and later supports High-Speed Uplink Packet Access (HSUPA). HSDPA and HSUPA are sets of channels and procedures that enable high-speed packet data transmission on the downlink and uplink. HSDPA and HSUPA are thus parts of the family of mobile telephony protocols named High-Speed Packet Access (HSPA). Release 7 HSPA+ uses three enhancements to improve data rate. First, support was introduced for 2×2 multiple-input and multiple-output (MIMO) on the downlink **106**. With MIMO, the peak data rate supported on the downlink **106** is 28 megabits per second (Mbps). Second, higher order modulation was introduced on the downlink **106**. The use of 64 quadrature amplitude modulation (QAM) on the downlink **106** allows peak data rates of 21 Mbps. Third, higher order modulation was introduced on the uplink **108**. The use of 16 QAM on the uplink **108** allows peak data rates of 11 Mbps.

[0052] In HSUPA, the base station **102** may allow several wireless communication devices **104** to transmit at a certain power level at the same time (using grants). These grants are assigned to wireless communication devices **104** by using a fast scheduling algorithm that allocates the resources on a short-term basis (i.e., on the order of tens of milliseconds (ms)). The rapid scheduling of HSUPA is well suited to the bursty nature of packet data. During periods of high activity, a wireless communication device **104** may get a larger percentage of the available resources, while getting little or no bandwidth during periods of low activity.

[0053] In 3GPP Release 5 HSDPA, a base station **102** may send downlink payload data to wireless communication devices on the High-Speed Downlink Shared Channel (HS-DSCH). A base station **102** may also send the control information associated with the downlink data on the High-Speed

Shared Control Channel (HS-SCCH). There are 256 Orthogonal Variable Spreading Factor (OVSF) codes (or Walsh codes) used for data transmission. In HSDPA systems, these codes are partitioned into Release 1999 (legacy system) codes that are typically used for cellular telephony (voice) and HSDPA codes that are used for data services. For each transmission time interval (TTI), the dedicated control information sent to an HSDPA-enabled wireless communication device **104** may indicate to the wireless communication device **104** which codes within the code space will be used to send downlink payload data to the wireless communication device **104** and the modulation that will be used for transmission of the downlink payload data.

[0054] With HSDPA operations, downlink transmissions to the wireless communication devices **104***a-b* may be scheduled for different transmission time intervals (TTIs) using the 15 available HSDPA Orthogonal Variable Spreading Factor (OVSF) codes. For a given transmission time interval (TTI), each wireless communication device **104** may be using one or more of the 15 HSDPA codes, depending on the downlink bandwidth allocated to the wireless communication device **104** during the transmission time interval (TTI). As discussed above, for each transmission time interval (TTI), the control information indicates to the wireless communication device **104** which codes within the code space will be used to send downlink payload data (data other than control data of the wireless communications system **100**) to the wireless communication device **104**, along with the modulation that will be used for the transmission of the downlink payload data.

[0055] Based on communications received from a base station **102**, a wireless communication device **104** may generate one or more channel quality indicators (CQIs) **112***a-b*. Each channel quality indicator (CQI) **112** may be a channel measurement for the downlink **106** channel between the base station **102** and the wireless communication device **104**. A channel quality indicator (CQI) **112** may be dependent on the transmission scheme used in the wireless communications system **100**. Because multiple-input and multiple-output (MIMO) communication is used between the base station **102** and the wireless communication device **104**, each channel quality indicator (CQI) **112** may correspond to a different downlink **106** channel (i.e., a different transmit antenna and receive antenna pair) between the base station **102** and the wireless communication device **104**.

[0056] A wireless communication device **104** may use the channel quality indicators (CQIs) **112** to determine a preferred beam **110***a-b*. A preferred beam **110** may refer to the antenna structure, weight, transmission direction and phase of a signal transmitted by the base station **102** to the wireless communication device **104**. The terms "beam" and "precoding vector" may refer to the direction in which data is streamed wirelessly from an antenna. In multiple-input and multiple-output (MIMO), multiple beams may be used to transmit information between a base station **102** and a wireless communication device **104**. A preferred beam may thus refer to a beam that produces the best (i.e., the optimal) data stream between the base station **102** and the wireless communication device **104**.

[0057] In Release 7 of HSPA, single-user MIMO (SU-MIMO) is used. When a wireless communication device **104** has good geometry (i.e., the wireless communication device **104** is in a good position relative to the base station **102**), the wireless communication device **104** may request dual-stream transmissions from the base station **102**. In dual-stream transmissions, the base station **102** may transmit a first data stream and a second data stream to a wireless communication device **104** during a transmission time interval (TTI). The first data stream and the second data stream may be transmitted on orthogonal antenna beams. It is inherent that one of the data streams (i.e., a preferred data stream) will have a higher throughput than the other. When a MIMO-capable wireless communication device **104** requests dual-stream transmission, the channel quality indicator (CQI) **112** of the preferred beam may be higher than that of an orthogonal beam used in addition to the preferred beam. Hence, transmitting on both data streams to a wireless communication device **104** may not result in the most efficient resource usage.

[0058] In contrast, multiple-user MIMO (MU-MIMO) may increase user throughputs on the downlink **106** over traditional SU-MIMO by making more intelligent use of the base station **102** resources. MU-MIMO may enable an increase in throughput for a particular transmission time interval (TTI) compared to dual-stream transmission to a single wireless communication device **104**. The downlink data stream selection module **114** may thus determine whether to use dual downlink data streams for a single wireless communication device **104** (i.e., SU-MIMO) or to use a first data stream for a first wireless communication device **104***a* and a second data stream that is orthogonal to the first data stream for a second wireless communication device **104***b* (i.e., MU-MIMO).

[0059] A channel quality indicator (CQI) **112** may correspond to a request for a single-stream transmission or a dual-stream transmission. As discussed above, a wireless communication device **104** may include multiple channel quality indicators (CQIs) **112**. The wireless communication device **104** may generate multiple channel quality indicators (CQIs) **112** for each transmission time interval (TTI). A wireless communication device **104** may not send every channel quality indicator (CQI) **112** to the base station **102** for every transmission time interval (TTI). In the current standard, a wireless communication device **104** may send only the optimal channel quality indicator (CQI) **112** to the base station **102** for each transmission time interval (TTI).

[0060] If the wireless communication device **104** determines that it has good geometry with respect to the base station **102** (i.e., the channel quality between the base station **102** and the wireless communication device **104** is above a threshold), the wireless communication device **104** may send an optimal dual-stream multiple-input and multiple-output (MIMO) channel quality indicator (CQI) **112** to the base station **102**. If the wireless communication device **104** determines that it has bad geometry with respect to the base station **102** (i.e., the channel quality between the base station **102** and the wireless communication device **104** is below the threshold), the wireless communication device **104** may send an optimal single-stream multiple-input and multiple-output (MIM) channel quality indicator (CQI) **112** to the base station **102**.

[0061] However, these channel quality indicators (CQIs) **112** do not take into account inter-stream interference (ISI). Inter-stream interference (ISI) refers to the interference that may occur when the base station **102** transmits multiple data streams simultaneously. If inter-stream interference (ISI) is not taken into account, a base station **102** may use a bit rate that the wireless communication device **104** is unable to decode.

[0062] Each wireless communication device **104** may include a channel quality indicator (CQI) feedback module

119*a-b*. A channel quality indicator (CQI) feedback module **119** may be used by the wireless communication device **104** to determine what channel quality indicator (CQI) **112** to send to the base station **102**. The channel quality indicator (CQI) feedback module **119** may generate some single-stream channel quality indicators (CQIs) **112** that are adjusted to account for inter-stream interference (ISI). In one configuration, the channel quality indicator (CQI) feedback module **119** may alternate between sending a channel quality indicator (CQI) **112** generated using Release 7 and a channel quality indicator (CQI) **112** adjusted for inter-stream interference (ISI) for each transmission time interval (TTI).

[0063] A wireless communication device **104** may transmit the channel quality indicators (CQIs) **112** to the base station **102** via the uplink **108** channel. The base station **102** may thus receive channel quality indicators (CQI) **116** from many wireless communication devices **104** corresponding to many downlink **106** channels. The base station **102** may include a downlink data stream selection module **114**. The downlink data stream selection module **114** may include the received channel quality indicators (CQIs) **116**. The downlink data stream selection module **114** may use the received channel quality indicators (CQIs) **116** to determine scheduling for each wireless communication device **104**. The downlink data stream selection module **114** is discussed in further detail below in relation to FIG. **2**.

[0064] The downlink data stream selection module **114** may include a data rate **121**. The data rate **121** may refer to the bit rate of a downlink **106** data stream. The downlink data stream selection module **114** may also include a multiple-user multiple-input and multiple output (MU-MIMO) adaptive outer loop margin **115**. The multiple-user multiple-input and multiple-output (MU-MIMO) adaptive outer loop margin **115** may be an adjustment that the base station **102** applies to the data rate **121** for each channel quality indicator (CQI) **112** feedback cycle. If the channel quality indicator (CQI) **112** feedback cycle is 1, a wireless communication device **104** may report a channel quality indicator (CQI) **112** for each transmission time interval (TTI).

[0065] The multiple-user multiple-input and multiple-output (MU-MIMO) adaptive outer loop margin **115** may be used by the base station **102** to increase or decrease the data rate **121** when a wireless communication device **104** sends a single-stream channel quality indicator (CQI) **112** and the base station **102** has determined to use a multiple-user multiple-input and multiple-output (MU-MIMO) transmissions.

[0066] The downlink data stream selection module **114** may also include a single-user multiple-input and multiple-output (SU-MIMO) adaptive outer loop margin **117**. The single-user multiple-input and multiple-output (SU-MIMO) adaptive outer loop margin **117** may be used by the base station **102** to increase or decrease the data rate **121** when a wireless communication device **104** has requested either a single-stream or a dual-stream transmission and the base station **102** determines to use a single-user multiple-input and multiple-output (SU-MIMO) transmission or when the wireless communication device **104** has requested a dual-stream transmission and the base station **102** determines to use a multiple-user multiple-input and multiple-output (MU-MIMO) transmission. Both the single-user multiple-input and multiple-output (SU-MIMO) adaptive outer loop margin **117** and the multiple-user multiple-input and multiple-output (MU-MIMO) adaptive outer loop margin **115** may be adjusted/updated based upon the reception of a positive-acknowledgement/negative-acknowledgement (ACK/NACK) from a wireless communication device **104**. Single-user multiple-input and multiple-output (SU-MIMO) adaptive outer loop margins **117** and multiple-user multiple-input and multiple-output (MU-MIMO) adaptive outer loop margins **115** are discussed in additional detail below in relation to FIG. **3**.

[0067] FIG. **2** shows another wireless communication system **200** with multiple wireless devices. The wireless communication system **200** may include a Node B **202**. The Node B **202** of FIG. **2** may be one configuration of the base station **102** of FIG. **1**. The wireless communication system **200** may also include a first user equipment (UE) **204***a* and a second user equipment (UE) **204***b*. The first user equipment (UE) **204***a* and the second user equipment (UE) **204***b* of FIG. **2** may be one configuration of the wireless communication devices **104***a-b* of FIG. **1**.

[0068] The Node B **202** may include a downlink data stream selection module **214**. The downlink data stream selection module **214** of FIG. **2** may be one configuration of the downlink data stream selection module **114** of FIG. **1**. The downlink data stream selection module **214** may include a user equipment (UE) pairing module **222**. The user equipment (UE) pairing module **222** may determine one or more user equipment (UE) pairs **224**. A user equipment (UE) pair **224** may refer to two user equipments (UEs) **204** with preferred data streams **218** that are orthogonal to each other. User equipment (UE) pairs **224** are discussed in additional detail below in relation to FIG. **4**. The Node B **202** may also include a selected user equipment (UE) pair **225**. Since the Node B **202** can only transmit two orthogonal data streams at a time, only one user equipment (UE) pair **224** may be selected as the user equipment (UE) pair **225**. Optimization procedures may be used to determine the selected user equipment (UE) pair **225**.

[0069] The Node B **202** may select a user equipment (UE) pair **224** as the selected user equipment (UE) pair **225**. In one configuration, the Node B **202** may select a user equipment (UE) pair **224** if the sum rate of data streams for two different user equipments (UEs) **204** is larger than the UE-specific sum rate of the two data streams. For example, if the first user equipment (UE) **204***a* requests two data streams, the first user equipment (UE) **204***a* may report a preferred primary precoding vector b**1** and the two channel quality indicators (CQIs) **112** CQI**1** and CQI**2** that correspond to the preferred (strong) data stream **218***a* and the secondary (weak) data stream **220**, respectively. Similarly, if the second user equipment (UE) **204***b* requests two streams of data, the second user equipment (UE) **204***b* may report a preferred primary precoding vector b**2** and channel quality indicators (CQIs) **112** CQI**1'** and CQI**2'** for both data streams.

[0070] The preferred secondary precoding vector (that is orthogonal to b**1**) is b**2** and may be known by the base station **102** based on the preferred primary precoding vector b**1**. If CQI**1**>CQI**1'** and CQI**2**>CQI**2'**, the first user equipment (UE) preferred data stream **218***a* may be mapped to precoding vector b**1** and the second user equipment (UE) preferred data stream **218***b* may be mapped to precoding vector b**2**. The base station **102** may only be capable of sending a maximum of two data streams in a given transmission time interval (TTI) on orthogonal beams. Therefore, only user equipments (UEs) **204** that have orthogonal preferred beams **228** may be paired.

[0071] If both the first user equipment (UE) **204***a* and the second user equipment (UE) **204***b* request beams b**1** and b**2**, the Node B **202** may pair the two user equipments (UEs) **204**

on beams b**1** and b**2**. If the Node B **202** finds this pairing to be maximizing a certain metric during the transmission time interval (TTI), the Node B **202** may schedule data streams to the selected user equipment (UE) pair **225** in the same transmission time interval (TTI) using the same orthogonal variable spreading factor (OVSF) codes **226**. An orthogonal variable spreading factor (OVSF) code **226** is an orthogonal code that facilitates uniquely identifying individual communication channels. One example of a metric that may be maximized is the sum proportional fair metric. In the sum proportional fair metric, the proportional fair metrics per stream are summed whenever MU-MIMO transmission is considered. Other metrics may also be used.

[0072] The Node B **202** may communicate with the first user equipment (UE) **204***a* during a first transmission time interval (TTI) using SU-MIMO. For example, the Node B **202** may transmit a first user equipment (UE) preferred data stream **218***a* to the first user equipment (UE) **204***a* using a first preferred beam **228***a*. The Node B **202** may also transmit a first user equipment (UE) secondary data stream **220***a* to the first user equipment (UE) **204***a* using a first secondary beam **230***a*. The first preferred beam **228***a* and the first secondary beam **230***a* may be orthogonal to each other.

[0073] During a second transmission time interval (TTI), the Node B **202** may communicate with the second user equipment (UE) **204***b*. For example, the Node B **202** may transmit a second user equipment (UE) preferred data stream **218***b* to the second user equipment (UE) **204***b* using a second preferred beam **228***b*. The Node B **202** may also transmit a second user equipment (UE) secondary data stream **220***b* to the second user equipment (UE) **204***b* using a second secondary beam **230***b*. The second preferred beam **228***b* and the second secondary beam **230***b* may be orthogonal to each other.

[0074] Sending two data streams on orthogonal beams to the same user equipment (UE) **204** may not result in the best resource usage for the wireless communication system **200**. In other words, sending two data streams on orthogonal beams to the same user equipment (UE) **204** may not allocate power in the Node B **202** in the most efficient way because the preferred data stream **218** has a stronger channel quality indicator (CQI) **112** than a secondary data stream **220**. If the same amount of power is used to transmit each data stream, throughput for the secondary data stream **220** will be lower than throughput for the preferred data stream **218** (due to the secondary data stream **220** having a lower channel quality indicator (CQI)) **112**.

[0075] By using MU-MIMO instead of SU-MIMO, user throughputs on the downlink **106** may be increased by more intelligently using the resources of the Node B **202**. In MU-MIMO, the Node B **202** may find a first user equipment (UE) **204***a* and a second user equipment (UE) **204***b* with preferred beams **228** that are orthogonal to each other. The first user equipment (UE) **204***a* and the second user equipment (UE) **204***b* may be referred to as a user equipment (UE) pair **224**.

[0076] Instead of transmitting a dual stream (i.e., a preferred data stream **218** and a secondary data stream **220**) during one transmission time interval (TTI) to a user equipment (UE) **204**, the Node B **202** may transmit a first user equipment (UE) preferred data stream **218***a* to the first user equipment (UE) **204***a* while simultaneously transmitting a second user equipment (UE) preferred data stream **218***b* to the second user equipment (UE) **204***b*. Thus, the Node B **202** may refrain from transmitting a first user equipment (UE) secondary data stream **220***a* and a second user equipment (UE) secondary data stream **220***b*. The Node B **202** may transmit the first user equipment (UE) preferred data stream **218***a* and the second user equipment (UE) preferred data stream **218***b* using the same codes (e.g., an orthogonal variable spreading factor (OVSF) code **226** with a spreading factor of sixteen). Because the Node B **202** does not have to allocate power to a data stream with lower throughput, the throughput for the wireless communication system **200** may be improved.

[0077] The Node B **202** may transmit the first user equipment (UE) preferred data stream **218***a* using a first preferred beam **228***a*. The Node B **202** may transmit the first user equipment (UE) secondary data stream **220***a* using a first secondary beam **230***a*. The Node B **202** may transmit the second user equipment (UE) preferred data stream **218***b* using a second preferred beam **228***b*. The Node B **202** may also transmit the second user equipment (UE) secondary data stream **220***b* using a second secondary beam **230***b*. If the first user equipment (UE) **204***a* and the second user equipment (UE) **204***b* are a user equipment (UE) pair **224**, then the first preferred beam **228***a* and the second preferred beam **228***b* are orthogonal.

[0078] FIG. **3** is a flow diagram of a method **300** for adjusting a data rate **121** to account for inter-stream interference (ISI) in both single-user multiple-input and multiple-output (SU-MIMO) transmissions and multiple-user multiple-input and multiple-output (MU-MIMO) transmissions. The method **300** may be performed by a base station **102**. In one configuration, the base station **102** may be a Node B **202**. The method **300** of FIG. **3** requires no channel quality indicator (CQI) **112** reporting changes to the user equipments (UEs) **204** in communication with the base station **102**.

[0079] The base station **102** may receive **302** a channel quality indicator (CQI) **112** from a user equipment (UE) **204** requesting a single-stream transmission at a first data rate **121**. This channel quality indicator (CQI) **112** may not take into account the inter-stream interference (ISI) that may occur if the base station **102** uses a dual-stream transmission. If the channel quality indicator (CQI) **112** received is requesting a dual-stream transmission, the method **300** does not apply. This is because a user equipment (UE) **204** requesting dual-stream transmission requests a particular bit rate from the base station **102** on each stream that takes the inter-stream interference (ISI) into account.

[0080] After receiving a channel quality indicator (CQI) **112**, the base station **102** may determine **304** whether to use single-user multiple-input and multiple-output (SU-MIMO) or multiple-user multiple-input and multiple-output (MU-MIMO) for the data transmission. The base station **102** may use a ranking algorithm to determine whether to use single-user multiple-input and multiple-output (SU-MIMO) or multiple-user multiple-input and multiple-output (MU-MIMO) for the data transmission. The ranking algorithm is discussed in additional detail below.

[0081] If the base station **102** determines to use multiple-user multiple-input and multiple-output (MU-MIMO) for the data transmission, the base station **102** may adjust **306** the first data rate **121** by a multiple-user multiple-input and multiple-output (MU-MIMO) adaptive outer loop margin **115** to obtain a second data rate **121**. The multiple-user multiple-input and multiple-output (MU-MIMO) adaptive outer loop margin **115** may be positive or negative in the dB (logarithmic) domain. The multiple-user multiple-input and multiple-

output (MU-MIMO) adaptive outer loop margin **115** may be additive in the logarithm domain and multiplicative in the linear domain. In one configuration, the multiple-user multiple-input and multiple-output (MU-MIMO) adaptive outer loop margin **115** may not be constant; instead the multiple-user multiple-input and multiple-output (MU-MIMO) adaptive outer loop margin **115** may be updated whenever an ACK/NACK is received. In another configuration, the multiple-user multiple-input and multiple-output (MU-MIMO) adaptive outer loop margin **115** may be a constant. The base station **102** may then transmit **308** a data stream using multiple-user multiple-input and multiple-output (MU-MIMO) with the second data rate **121** to the user equipment (UE) **204**.

[0082] The base station **102** may receive **310** an ACK/NACK from the user equipment (UE) **204**. The base station **102** may then determine **312** whether an ACK or a NACK was received for the corresponding data transmission. If an ACK was received (i.e., the user equipment (UE) **204** was able to successfully decode the data transmission), the base station **102** may decrease **314** the multiple-user multiple-input and multiple-output (MU-MIMO) adaptive outer loop margin **115**. In one configuration, the base station **102** may incrementally decrease **314** the multiple-user multiple-input and multiple-output (MU-MIMO) adaptive outer loop margin **115**. In yet another configuration, the base station **102** may decrease **314** the multiple-user multiple-input and multiple-output (MU-MIMO) adaptive outer loop margin **115** using a function. The base station **102** may then wait to receive **302** another channel quality indicator (CQI) **112** from a user equipment (UE) **204**.

[0083] If a NACK was received (i.e., the user equipment (UE) **204** was unable to successfully decode the data transmission), the base station **102** may increase **316** the multiple-user multiple-input and multiple-output (MU-MIMO) adaptive outer loop margin **115**. In one configuration, the base station **102** may incrementally increase **316** the multiple-user multiple-input and multiple-output (MU-MIMO) adaptive outer loop margin **115**. In yet another configuration, the base station **102** may increase **316** the multiple-user multiple-input and multiple-output (MU-MIMO) adaptive outer loop margin **115** using a function. The base station **102** may then wait to receive **302** another channel quality indicator (CQI) **112** from a user equipment (UE) **204**.

[0084] If the base station **102** determines to use single-user multiple-input and multiple-output (SU-MIMO) for the data transmission, the base station **102** may adjust **318** the first data rate **121** by a single-user multiple-input and multiple-output (SU-MIMO) adaptive outer loop margin **117** to obtain a third data rate **121**. The single-user multiple-input and multiple-output (SU-MIMO) adaptive outer loop margin **117** may be positive or negative in the dB (logarithmic) domain. The single-user multiple-input and multiple-output (SU-MIMO) adaptive outer loop margin **117** may be additive in the logarithm domain and multiplicative in the linear domain. In one configuration, the single-user multiple-input and multiple-output (SU-MIMO) adaptive outer loop margin **117** may not be constant; instead the single-user multiple-input and multiple-output (SU-MIMO) adaptive outer loop margin **117** may be updated whenever an ACK/NACK is received. In another configuration, the single-user multiple-input and multiple-output (SU-MIMO) adaptive outer loop margin **117** may be a constant. The base station **102** may then transmit **320** a data stream using single-user multiple-input and multiple-output (SU-MIMO) with the third data rate **121** to the user equipment (UE) **204**.

[0085] The base station **102** may receive **322** an ACK/NACK from the user equipment (UE) **204**. The base station **102** may then determine **324** whether an ACK or a NACK was received for the corresponding data transmission. If an ACK was received (i.e., the user equipment (UE) **204** was able to successfully decode the data transmission), the base station **102** may decrease **326** the single-user multiple-input and multiple-output (SU-MIMO) adaptive outer loop margin **117**. In one configuration, the base station **102** may incrementally decrease **326** the single-user multiple-input and multiple-output (SU-MIMO) adaptive outer loop margin **117**. In yet another configuration, the base station **102** may decrease **326** the single-user multiple-input and multiple-output (SU-MIMO) adaptive outer loop margin **117** using a function. The base station **102** may then wait to receive **302** another channel quality indicator (CQI) **112** from a user equipment (UE) **204**.

[0086] If a NACK was received (i.e., the user equipment (UE) **204** was unable to successfully decode the data transmission), the base station **102** may increase **328** the single-user multiple-input and multiple-output (SU-MIMO) adaptive outer loop margin **117**. In one configuration, the base station **102** may incrementally increase **328** the single-user multiple-input and multiple-output (SU-MIMO) adaptive outer loop margin **117**. In yet another configuration, the base station **102** may increase **328** the single-user multiple-input and multiple-output (SU-MIMO) adaptive outer loop margin **117** using a function. The base station **102** may then wait to receive **302** another channel quality indicator (CQI) **112** from a user equipment (UE) **204**.

[0087] Because the single-user multiple-input and multiple-output (SU-MIMO) adaptive outer loop margin **117** and the multiple-user multiple-input and multiple-output (MU-MIMO) adaptive outer loop margin **115** are dynamic, the method **300** of FIG. **3** may be referred to as the dual outer loop algorithm. One advantage of the dual outer loop algorithm is that no change to the channel quality indicator (CQI) **112** reporting protocol (e.g., the High-Speed Packet Access (HSPA) standards established by 3GPP) is required. One possible disadvantage may be that the single-user multiple-input and multiple-output (SU-MIMO) adaptive outer loop margin **117** and the multiple-user multiple-input and multiple-output (MU-MIMO) adaptive outer loop margin **115** may change relatively slowly, inhibiting optimal performance.

[0088] FIG. **4** is a block diagram illustrating a comparison table for pairing user equipments (UEs) **404**. In the table, five user equipments (UEs) **404***a-e* are compared to determine user equipment (UE) pairs **432**. Each of the user equipments (UEs) **404** is dual-stream capable. However, only the preferred beam **228** for each user equipment (UE) **404** is compared with the preferred beam **228** for each other user equipment (UE) **404**.

[0089] A user equipment (UE) pair **432** occurs when the preferred beam **228** for one user equipment (UE) **404** is orthogonal to the preferred beam **228** for another user equipment (UE) **404**. For example, the preferred beam **228** for UE**1** **404***a* may be orthogonal to the preferred beam **228** for UE**4** **404***d*. Thus, UE**1** **404***a* and UE**4** **404***d* are a user equipment (UE) pair **432***a*. As another example, the preferred beam **228** for UE**2** **404***b* may be orthogonal to the preferred beam **228** for UE**3** **404***c*. Thus, UE**2** **404***b* and UE**3** **404***c* are a user

equipment (UE) pair **432***b*. If the preferred beams **228** for user equipments (UEs) **404** are not orthogonal, the matchup may be listed as non-orthogonal. A user equipment (UE) **404** may have a preferred beam **228** that is orthogonal to the preferred beams **228** of multiple user equipments (UEs) **404**. A user equipment (UE) **404** may also have a preferred beam **228** that is orthogonal to none of the preferred beams **228** of the user equipments (UEs) **404** available for pairing. For example, UE**5** **404***e* is shown as having a preferred beam **228** that is non-orthogonal to the preferred beams **228** of the other user equipments (UEs) **404**.

[0090] In case of multiple user equipment (UE) pairs **432**, a base station **102** may select one of the user equipment (UE) pairs **432**. Many different methods may be used for selecting one of the user equipment (UE) pairs **432**. For example, a sum proportional fair metric may be used.

[0091] Usually scheduling aims to maximize a utility function $U(R_1(t), \ldots, R_N(t))$ by allocating resources per transmission time interval (TTI) to certain users. The utility function for proportional fairness is given in Equation (1):

$$U(R_1(t), \ldots, R_N(t)) = \sum_{i=1}^{N} \log(R_i(t)) \longrightarrow \max. \tag{1}$$

[0092] In Equation (1) $R_i(t)$ denotes the average throughput of user i at time t. Assuming one stream, Equation (1) is equivalent to the resource allocation rule per transmission time interval (TTI) in Equation (2):

$$\max_{\delta_i} \sum_{i=1}^{N} \frac{\delta_i \cdot r_i(t)}{R_i(t)}, \ \delta_i \in \{0, 1\}. \tag{2}$$

[0093] In Equation (2), $r_i(t)$ denotes the instantaneous rate the offers to user i at time t and $\delta_i \in \{0,1\}$ indicates the resource allocation to user i. The task of the scheduler is to allocate resources per transmission time interval (TTI) (i.e., to choose the indices δ_i in order to maximize the utility function). The resource allocation rule can be generalized for SU-MIMO in Equation (3):

$$\max_{\delta_i} \sum_{i=1}^{N} \frac{\delta_i \sum_{j=1}^{M} r_{ij}(t)}{R_i(t)}, \ \delta_i \in \{0, 1\}. \tag{3}$$

[0094] For a 2×2 MU-MIMO, the rule to pair the users i_1 and i_2 is given in Equation (4):

$$\max_{\substack{i_1, i_2 \in [1 \ldots, \ldots N] \\ i_1 \neq i_2}} \left(\max\left(\frac{r_{i_1 1}(t)}{R_{i_1}(t)} + \frac{r_{i_2 2}(t)}{R_{i_2}(t)}; \frac{r_{i_1 2}(t)}{R_{i_1}(t)} + \frac{r_{i_2 1}(t)}{R_{i_2}(t)} \right) \right). \tag{4}$$

[0095] The pairing algorithm decides which users and streams are paired per transmission time interval (TTI) according to the MU-MIMO proportional fair rule. The pairing algorithm then determines V precoding vectors b_k, k=1 . . . 4 and all candidate users u_j per transmission time interval (TTI). The candidate sets are $U(b_k)=\{(u_j, CQI(b_k)\}$, where b_k is a preferred primary precoding vector for u_j. Candidate users do not require a rank-2 CQI report. Precoding vectors b_k and b_{5-k} are assumed to be orthogonal. The user pairs for MU-MIMO transmission may then be determined using one or more approaches. In a first approach, the user pairs $(u_i, u_j) \epsilon (U(b_k), U(b_{5-k}))$ can be scheduled. For linear receivers, the preferred precoding vector offers a better CQI. This approach works irrespective of the receiver architecture.

[0096] A ranking algorithm may then be used. The ranking algorithm may identify per transmission time interval (TTI) the highest prioritized MU-MIMO pairs and the highest prioritized SU-MIMO users. A user is called eligible if it has a free HARQ process and data in its MAC priority queue(s). The reported CQI (quantized signal to noise ratio (SNR) in decibels (dB)) may be mapped to a spectral efficiency (in bits/symbol) for each eligible user.

[0097] An SU-MIMO user ranking list may then be calculated for all eligible users according to the proportional fair rule. Single or dual stream SU-MIMO may be assumed for each eligible user depending on the reported channel rank. The highest prioritized MU-MIMO eligible pair according to the user pairing approach may be determined according to the proportional fair rule. If needed, the spectral efficiencies may be rescaled to account for the power split between the paired users. Based on a priority comparison, either the highest prioritized user from the SU-MIMO ranking list or the highest prioritized MU-MIMO user pair may be scheduled in the instantaneous transmission time interval (TTI) (assuming that only one user for SU-MIMO or one user pair for MU-MIMO is scheduled per transmission time interval (TTI)). A CQI mapping table may then be used.

[0098] FIG. **5** is a block diagram illustrating a timeline **500** with multiple transmission time intervals (TTIs) **538**. A Node B **502** may communicate with a first user equipment (UE) **504***a*, a second user equipment (UE) **504***b* and a third user equipment (UE) **504***c*. During a first transmission time interval (TTI) **538***a*, the first user equipment (UE) **504***a* and the second user equipment (UE) **504***b* may be part of a first user equipment (UE) pair **534***a*. The Node B **502** may transmit **536** on orthogonal preferred data streams **218** to the first user equipment (UEs) pair **534** (i.e., to the first user equipment (UE) **504***a* using a first user equipment (UE) preferred data stream **218***a* and to the second user equipment (UE) **504***b* using a second user equipment (UE) preferred data stream **218***b*) during the first transmission time interval (TTI) **538***a*.

[0099] After the first transmission time interval (TTI) **538***a*, the Node B **502** may evaluate **540** received channel quality indicators (CQIs) **112** and reselect the user equipment (UE) pair **534**. For example, the Node B **502** may select a second user equipment (UE) pair **534***b* for a second transmission time interval (TTI) **538***b*. The second user equipment (UE) pair **534***b* may include the second user equipment (UE) **504***b* and the third user equipment (UE) **504***c*. The Node B **502** may then transmit **542** on the orthogonal preferred data streams **218** to the selected user equipment (UE) pair **534***b* (i.e., to the second user equipment (UE) **504***b* using a second user equipment (UE) preferred data stream **218***b* and to the third user equipment (UE) **504***c* using a third user equipment (UE) preferred data stream (not shown)) during the second transmission time interval (TTI) **538***b*.

[0100] FIG. **6** is a flow diagram of a method **600** for sending channel quality indicator (CQI) **112** feedback that accounts for inter-stream interference (ISI). The method **600** may be

performed by a user equipment (UE) **204**. The user equipment (UE) **204** may be operating in a High-Speed Packet Access (HSPA) system. In the method **600** of FIG. **6**, no standards changes are necessary for the base station **102** receiving the channel quality indicators (CQIs) **112**.

[0101] The user equipment (UE) **204** may determine **602** an optimal single-stream multiple-input and multiple-output (MIMO) channel quality indicator (CQI) **112** that is adjusted for inter-stream interference (ISI). Whenever the user equipment (UE) **204** computes a channel quality indicator (CQI) **112** along a beam for multiple-user multiple-input and multiple-output (MU-MIMO), the user equipment (UE) **204** may assume 50% of the power on the beam that is orthogonal to it. This is enough to obtain a channel quality indicator (CQI) **112** that is adjusted for inter-stream interference (ISI).

[0102] There may be four possible single-stream channel quality indicators (CQIs) **112** to choose from. In some configurations of High-Speed Packet Access (HSPA), single-stream multiple-input and multiple-output (MIMO) channel quality indicators (CQIs) **112** may not account for inter-stream interference (ISI), leading to a base station **102** transmitting at an overly optimistic data rate **121** (i.e., a large transmit block size (TBS)) to the user equipment (UE) **204** if the base station **102** is using multiple-user multiple-input and multiple-output (MU-MIMO). The user equipment (UE) **204** may send **604** the optimal adjusted MIMO channel quality indicator (CQI) **112** to a Node B **202**.

[0103] The user equipment (UE) **204** may then determine **606** an optimal multiple-input and multiple-output (MIMO) channel quality indicator (CQI) **112**. The optimal multiple-input and multiple-output (MIMO) channel quality indicator (CQI) **112** may request either a single-stream or a dual-stream data transmission. The optimal multiple-input and multiple-output (MIMO) channel quality indicator (CQI) **112** may be a channel quality indicator (CQI) **112** that is generated according to Release 7. The decision between an optimal single-stream channel quality indicator (CQI) **112** and an optimal dual-stream channel quality indicator (CQI) **112** within a transmission time interval (TTI) **538** may be performed according to the High-Speed Packet Access protocol (e.g., Release 7).

[0104] There may be four possible single-stream channel quality indicators (CQIs) **112** and two possible dual-stream channel quality indicators (CQIs) **112**. The user equipment (UE) **204** may calculate the optimal multiple-input and multiple-output (MIMO) channel quality indicator (CQI) **112** as the best of the six possible channel quality indicators (CQIs) **112**. The optimal multiple-input and multiple-output (MIMO) channel quality indicator (CQI) **112** may refer to a regular channel quality indicator (CQI) **112** as it is fed back by the user equipment (UE) **204** to a Node B **202** according to Release 7. The user equipment (UE) **204** may send **608** the optimal multiple-input and multiple-output (MIMO) channel quality indicator (CQI) **112** to the Node B **202**. The user equipment (UE) **204** may then return to determining **602** an optimal single-stream multiple-input and multiple-output (MIMO) channel quality indicator (CQI) **112** that is adjusted for inter-stream interference (ISI).

[0105] In general, user equipments (UEs) **204** with good geometry may report dual-stream channel quality indicators (CQIs) **112** more often than single-stream channel quality indicators (CQIs) **112**. User equipments (UEs) **204** at the edge of a cell may report single-stream channel quality indicators (CQIs) **112** more often than dual-stream channel quality indicators (CQIs) **112**.

[0106] Thus, the user equipment (UE) **204** may alternate between sending a channel quality indicator (CQI) **112** that is generated as in Release 7 and a channel quality indicator (CQI) **112** that is adjusted for inter-stream interference (ISI). In other words, the user equipment (UE) **204** may interlace optimal single-stream channel quality indicators (CQIs) **112** that are adjusted for inter-stream interference (ISI) in between the optimal multiple-input and multiple-output (MIMO) channel quality indicators (CQIs) **112** (that are generated as in Release 7). Depending on a feedback cycle used by the user equipment (UE) **204**, the user equipment (UE) **204** may send one channel quality indicator (CQI) **112** for each transmission time interval (TTI) **538**.

[0107] One advantage of using the user equipment (UE) **204** solution (i.e., the method **600** of FIG. **6**) instead of the base station **102** solution (i.e., the method **300** of FIG. **3**) is that better performance may be obtained. In every transmission time interval (TTI) **538**, the base station **102** has access to a channel quality indicator (CQI) **112** for scheduling single-user multiple-input and multiple-output (SU-MIMO) transmissions and a channel quality indicator (CQI) **112** for scheduling multiple-user multiple-input and multiple-output (MU-MIMO) transmissions. The base station **102** may also use the best multiple-input and multiple-output (MIMO) channel quality indicator (CQI) **112** when scheduling single-user multiple-input and multiple-output (SU-MIMO) data transmissions. Each of these channel quality indicators (CQIs) **112** is outdated by at most one extra transmission time interval (TTI) **538** more than usual.

[0108] One consequence of using the user equipment (UE) **204** solution is that it may require changes to the channel quality indicator (CQI) **112** reporting protocol (e.g., the High-Speed Packet Access standards established by 3GPP). These changes may include implementing higher-layer messaging to configure the channel quality indicator (CQI) **112** feedback algorithm of the user equipment (UE) **204**.

[0109] FIG. **7** is a timing diagram illustrating channel quality indicator (CQI) **112** feedback cycles for user equipments (UEs) **772***a-b*. FIG. **7** is a timing diagram for the method **600** illustrated in FIG. **6**. Each box represents a channel quality indicator (CQI) **112** report for a given transmission time interval (TTI). As discussed above, a user equipment (UE) **772** may interlace optimal single-stream channel quality indicators (CQIs) **112** that are adjusted for inter-stream interference (ISI) in between the optimal multiple-input and multiple-output (MIMO) channel quality indicators (CQIs) **112** (referred to as an optimal Rel-7 channel quality indicator (CQI) **112**).

[0110] The optimal Rel-7 channel quality indicator (CQI) **112** for a bad geometry user equipment (UE) **772***a* may often be a single-stream channel quality indicator (CQI) **112** such as that used in the transmission time interval (TTI) n **773***a* and in the transmission time interval (TTI) n+2 **773***c*. In contrast, the optimal channel quality indicator (CQI) **112** for a good geometry user equipment (UE) **772***b* may often be a dual-stream channel quality indicator (CQI) **112** such as that used in the transmission time interval (TTI) n **774***a* and in the transmission time interval (TTI) n+2 **774***c*. In one configuration (i.e., in the channel quality indicator (CQI) **112** of transmission time interval (TTI) n+6 **774***d*), the optimal channel

quality indicator (CQI) **112** for a good geometry user equipment (UE) **772***b* may instead be a single-stream channel quality indicator (CQI) **112**.

[0111] The channel quality indicator (CQI) **112** reporting for either a bad geometry user equipment (UE) **772***a* or a good geometry user equipment (UE) **772***b* may be unchanged for every other transmission time interval (TTI) (e.g., n, n+2, n+4, etc.). In between these transmission time intervals (TTIs), both a bad geometry user equipment (UE) **772***a* and a good geometry user equipment (UE) **772***b* may determine and send an optimal single-stream channel quality indicator (CQI) **112** that has been adjusted for inter-stream interference (ISI) such as the channel quality indicator (CQI) **112** for the transmission time interval (TTI) n+1 **773***b* for the bad geometry user equipment (UE) **772***a* and the channel quality indicator (CQI) **112** for the transmission time interval (TTI) n+1 **774***b* for the good geometry user equipment (UE) **772***b* (e.g., for transmission time intervals (TTIs) n+1, n+3, n+5, etc.). FIG. **7** as illustrated is for a feedback cycle equal to 1. FIG. **7** may change accordingly for a feedback cycle that is greater than 1.

[0112] FIG. **8** is a block diagram of a base station **802** for use in the present systems and methods. The base station **802** of FIG. **8** may be one configuration of the base station **102** of FIG. **1**. The base station **802** may include a first transmit chain **846***a* and a second transmit chain **846***b*. The first transmit chain **846***a* may be used for a first data stream **818***a* and the second transmit chain **846***b* may be used for a second data stream **818***b*.

[0113] The first transmit chain **846***a* may include a first baseband transmit signal **844***a*. The first baseband transmit signal **844***a* may be modulated using a modulator **847***a*, converted from a digital signal to an analog signal using a digital-to-analog converter (DAC) **848***a*, frequency converted using a mixer **849***a*, amplified using an amplifier **850***a* and finally transmitted by a first antenna **851***a* as the first data stream **818***a*. Likewise, the second transmit chain **846***b* may include a second baseband transmit signal **844***b*. The second baseband transmit signal **844***b* may be modulated using a modulator **847***b*, converted from a digital signal to an analog signal using a digital-to-analog converter (DAC) **848***b*, frequency converted using a mixer **849***b*, amplified using an amplifier **850***b* and finally transmitted by a second antenna **851***b* as the second data stream **818***b*. As discussed above, the first data stream **818***a* and the second data stream **818***b* may be transmitted during the same transmission time interval (TTI) **538** using the same orthogonal variable spreading factor (OVSF) codes **226** with orthogonal beams.

[0114] FIG. **9** is a block diagram of a wireless communication device **904** for use in the present systems and methods. The wireless communication device **904** of FIG. **9** may be one configuration of the wireless communication devices **104** of FIG. **1**. The wireless communication device **904** may include a transmit chain **946**. The transmit chain **946** may be used for a data stream **918**.

[0115] The transmit chain **946** may include a baseband transmit signal **944**. The baseband transmit signal **944** may be modulated using a modulator **947**, converted from a digital signal to an analog signal using a digital-to-analog converter (DAC) **948**, frequency converted using a mixer **949**, amplified using an amplifier **950** and finally transmitted by an antenna **951** as the data stream **918**. The data stream **918** may include one or more channel quality indicators (CQIs) sent by the wireless communication device **904** to a base station **102**.

[0116] FIG. **10** is a block diagram of a transmitter **1069** and receiver **1070** in a multiple-input and multiple-output (MIMO) system **1000**. In the transmitter **1069**, traffic data for a number of data streams is provided from a data source **1052** to a transmit (TX) data processor **1053**. Each data stream may then be transmitted over a respective transmit antenna **1056***a* through **1056***t*. The transmit (TX) data processor **1053** may format, code, and interleave the traffic data for each data stream based on a particular coding scheme selected for that data stream to provide coded data.

[0117] The coded data for each data stream may be multiplexed with pilot data using OFDM techniques. The pilot data may be a known data pattern that is processed in a known manner and used at the receiver **1070** to estimate the channel response. The multiplexed pilot and coded data for each stream is then modulated (i.e., symbol mapped) based on a particular modulation scheme (e.g., binary phase shift keying (BPSK), quadrature phase shift keying (QPSK), multiple phase shift keying (M-PSK) or multi-level quadrature amplitude modulation (M-QAM)) selected for that data stream to provide modulation symbols. The data rate, coding and modulation for each data stream may be determined by instructions performed by a processor.

[0118] The modulation symbols for all data streams may be provided to a transmit (TX) multiple-input multiple-output (MIMO) processor **1054**, which may further process the modulation symbols (e.g., for OFDM). The transmit (TX) multiple-input multiple-output (MIMO) processor **1054** then provides NT modulation symbol streams to NT transmitters (TMTR) **1055***a* through **1055***t*. The TX transmit (TX) multiple-input multiple-output (MIMO) processor **1054** may apply beamforming weights to the symbols of the data streams and to the antenna **1056** from which the symbol is being transmitted.

[0119] Each transmitter **1055** may receive and process a respective symbol stream to provide one or more analog signals, and further condition (e.g., amplify, filter and upconvert) the analog signals to provide a modulated signal suitable for transmission over the MIMO channel. NT modulated signals from transmitters **1055***a* through **1055***t* are then transmitted from NT antennas **1056***a* through **1056***t*, respectively.

[0120] At the receiver **1070**, the transmitted modulated signals are received by NR antennas **1061***a* through **1061***r* and the received signal from each antenna **1061** is provided to a respective receiver (RCVR) **1062***a* through **1062***r*. Each receiver **1062** may condition (e.g., filter, amplify and downconvert) a respective received signal, digitize the conditioned signal to provide samples, and further process the samples to provide a corresponding "received" symbol stream.

[0121] An RX data processor **1063** then receives and processes the NR received symbol streams from NR receivers **1062** based on a particular receiver processing technique to provide NT "detected" symbol streams. The RX data processor **1063** then demodulates, deinterleaves and decodes each detected symbol stream to recover the traffic data for the data stream. The processing by RX data processor **1063** is complementary to that performed by TX MIMO processor **1054** and TX data processor **1053** at transmitter system **1069**.

[0122] A processor **1064** may periodically determine which pre-coding matrix to use. The processor **1064** may store information on and retrieve information from memory **1065**. The processor **1064** formulates a reverse link message comprising a matrix index portion and a rank value portion. The reverse link message may be referred to as channel state

information (CSI). The reverse link message may comprise various types of information regarding the communication link and/or the received data stream. The reverse link message is then processed by a TX data processor **1067**, which also receives traffic data for a number of data streams from a data source **1068**, modulated by a modulator **1066**, conditioned by transmitters **1062***a* through **1062***r*, and transmitted back to the transmitter **1069**.

[0123] At the transmitter **1069**, the modulated signals from the receiver are received by antennas **1056**, conditioned by receivers **1055**, demodulated by a demodulator **1058**, and processed by an RX data processor **1059** to extract the reverse link message transmitted by the receiver system **1070**. A processor **1060** may receive channel state information (CSI) from the RX data processor **1059**. The processor **1060** may store information on and retrieve information from memory **1057**. The processor **1060** then determines which pre-coding matrix to use for determining the beamforming weights and then processes the extracted message.

[0124] FIG. **11** is a block diagram illustrating a radio network **1100** operating according to Universal Mobile Telecommunications System (UMTS) standards. The radio network **1100** may be a UMTS Terrestrial Radio Access Network (UTRAN). A UMTS Terrestrial Radio Access Network (UTRAN) is a collective term for the Node Bs **1102***a-d* and the control equipment for the Node Bs **1102***a-d* (or radio network controllers (RNCs) **1175***a*) it contains which make up the UMTS radio access network (RAN) **1174**. This is a 3 G communications network which can carry both real-time circuit switched and IP based packet switched traffic types. The UTRAN provides an air interface access method for the user equipment (UE) **1104**. Connectivity is provided between the user equipment (UE) **1104** and the core network **1171** by the UTRAN. The radio access network (RAN) **1174** may transport data packets between multiple user equipments (UEs) **1104**.

[0125] The UTRAN is connected internally or externally to other functional entities by four interfaces: the Iu interface **1172***a-b*, the Uu interface **1178**, the Iub interface **1177***a-d* and the Iur interface **1176**. The UTRAN is attached to a Global Systems for Mobile (GSM) core network **1171** via an external interface called Iu interface **1172**. The radio network controllers (RNCs) **1175***a-b* support this interface. In addition, the radio network controllers (RNCs) **1175***a-b* manage a set of base stations called Node Bs **1102***a-d* through interfaces labeled Iub interface **1177***a-d*. A radio network controller (RNC) **1175** and the managed Node Bs **1102** form a radio network subsystem (RNS) **1173***a-b*. The Iur interface **1176** connects a first radio network controller (RNC) **1175***a* and a second radio network controller (RNC) **1175***b* with each other. The UTRAN is largely autonomous from the core network **1171** since the radio network controllers (RNCs) **1175***a-b* are interconnected by the Iur interface **1176**. FIG. **11** discloses a communication system which uses the radio network controller (RNC) **1175**, the Node Bs **1102***a-d*, the Iub interface **1172** and the Uu interface **1178**. The Uu interface **1178** is also external and connects the Node B **1102** with the user equipment (UE) **1104**, while the Iub interface **1177** is an internal interface connecting the radio network controller (RNC) **1175** with the Node B **1102**.

[0126] The radio network **1100** may be further connected to additional networks outside the radio network **1100**, such as a corporate intranet, the Internet, or a conventional public switched telephone network as stated above, and may transport data packets between each user equipment (UE) **1104** and such outside networks.

[0127] FIG. **12** is a block diagram illustrating communications between a user equipment (UE) **1204**, a Node B **1202** and a radio network controller (RNC) **1275** in a wireless communications network **1200**. The user equipment (UE) **1204** of FIG. **12** may be one configuration of the user equipment (UE) **204** of FIG. **2**. The Node B **1202** of FIG. **12** may be one configuration of the Node B **202** of FIG. **2**. The radio network controller (RNC) **1275** of FIG. **12** may be one configuration of the radio network controller (RNC) **1175** of FIG. **11**. The wireless communications network **1200** may operate using High-Speed Packet Access (HSPA). Both the Node B **1202** and the user equipment (UE) **1204** may be capable of multiple-user multiple-input and multiple-output (MU-MIMO) operations. The user equipment (UE) **1204** and the radio network controller (RNC) **1275** may communicate with each other via the Node B **1202** using Layer 3 messages. Layer 3 messages may also be referred to as radio resource control (RRC) messages. Layer 3 messages may be passed between the UTRAN and the user equipment (UE) **1204** and are used to configure and control the radio resource control (RRC) connection between a user equipment (UE) **1204** and the UTRAN. Layer 3 messages may deal with connection management, control, mobility and measurement messages.

[0128] As discussed above, the Node B **1202** may communicate with the user equipment (UE) **1204** via the Uu interface **1178**. The Node B **1202** may communicate with the radio network controller (RNC) **1275** via the Iub interface **1177**. The Node B **1202**, the radio network controller (RNC) **1275** and the user equipment (UE) **1204** may all operate in accordance with a standard. Small changes to the standard may be needed to accommodate some signaling possibilities associated with multiple-user multiple-input and multiple-output (MU-MIMO) operation. As standards changes may be involved, multiple-user multiple-input and multiple-output (MU-MIMO) operation may be automatically detectable.

[0129] The user equipment (UE) **1204** may indicate to the radio network controller (RNC) **1275** that it is multiple-user multiple-input and multiple-output (MU-MIMO) capable. In one configuration, the user equipment (UE) **1204** may send a Radio Resource Control (RRC) message **1279** to the radio network controller (RNC) **1275** via the Node B **1202**. The Radio Resource Control (RRC) message **1279** may indicate the multiple-user multiple-input and multiple-output (MU-MIMO) capabilities **1280** of the user equipment (UE) **1204**. In another configuration, the user equipment (UE) **1204** may send a message to the radio network controller (RNC) **1275** via the Node B **1202** indicating that the user equipment (UE) **1204** is within a designated multiple-user multiple-input and multiple-output (MU-MIMO) capable category **1281**. In other words, the user equipment (UE) **1204** may indicate that it is in a category that is defined as being multiple-user multiple-input and multiple-output (MU-MIMO) capable.

[0130] The radio network controller (RNC) **1275** may send configuration messages to the user equipment (UE) **1204** via the Node B **1202**. For example, the radio network controller (RNC) **1275** may send a Radio Resource Control (RRC) message **1282** to the user equipment (UE) **1204** via the Node B **1202**. The Radio Resource Control (RRC) message **1282** may include a user equipment (UE) multiple-user multiple-input and multiple-output (MU-MIMO) configuration **1283** for the user equipment (UE) **1204**. The user equipment (UE)

multiple-user multiple-input and multiple-output (MU-MIMO) configuration **1283** may be required for the user equipment (UE) **1204** to support multiple-user multiple-input and multiple-output (MU-MIMO) operation.

[0131] The user equipment (UE) multiple-user multiple-input and multiple-output (MU-MIMO) configuration **1283** may include a channel quality indicator (CQI) report configuration **1284**. The channel quality indicator (CQI) report configuration **1284** may make changes to channel quality indicator (CQI) reporting by the user equipment (UE) **1204** (such as those discussed above in relation to FIG. **6**). The user equipment (UE) multiple-user multiple-input and multiple-output (MU-MIMO) configuration **1283** may also include a high-speed shared control channel (HS-SCCH) fields reinterpretation **1285**. The high-speed shared control channel (HS-SCCH) fields reinterpretation **1285** may instruct the user equipment (UE) **1204** on how to interpret high-speed shared control channel (HS-SCCH) fields differently than they would be interpreted otherwise. The user equipment (UE) **1204** may use the information in the Radio Resource Control (RRC) message **1282** to adjust configurations for multiple-user multiple-input and multiple-output (MU-MIMO) operation.

[0132] FIG. **13** is a flow diagram of a method **1300** for signaling a user equipment's (UE's) multiple-user multiple-input and multiple-output (MU-MIMO) operation capability **1280** from a user equipment (UE) **1204** to a radio network controller (RNC) **1275**. The method **1300** may be performed by a user equipment (UE) **1204**. The user equipment (UE) **1204** may determine **1302** the multiple-user multiple-input and multiple-output (MU-MIMO) operation capability **1280** of the user equipment (UE) **1204**. Examples of multiple-user multiple-input and multiple-output (MU-MIMO) operation capabilities **1280** of the user equipment (UE) **1204** include the ability to configure multiple-user multiple-input and multiple-output (MU-MIMO) channel quality indicator (CQI) **112** feedback if asked to do so by the radio network controller (RNC) **1175** and the ability to reinterpret fields in the high-speed shared control channel (HS-SCCH) if asked to do so by the radio network controller (RNC) **1175**. These operations may be required of the multiple-user multiple-input and multiple-output (MU-MIMO) user equipment (UE) **1204**.

[0133] The user equipment (UE) **1204** may generate **1304** a Radio Resource Control (RRC) message **1279** that includes the multiple-user multiple-input and multiple-output (MU-MIMO) operation capability **1280** of the user equipment (UE) **1204**. The user equipment (UE) **1204** may then send **1306** the Radio Resource Control (RRC) message **1279** to a Node B **1202** that forwards it to a radio network controller (RNC) **1275**.

[0134] FIG. **14** is a flow diagram of a method **1400** for signaling a user equipment (UE) multiple-user multiple-input and multiple-output (MU-MIMO) configuration **1283** required to support multiple-user multiple-input and multiple-output (MU-MIMO) operations from a network to a user equipment (UE) **1204**. The method **1400** may be performed by a radio network controller (RNC) **1275**. The radio network controller (RNC) **1275** may determine **1402** a user equipment (UE) multiple-user multiple-input and multiple-output (MU-MIMO) configuration **1283** required to support multiple-user multiple-input and multiple-output (MU-MIMO) operations. The radio network controller (RNC) **1275** may then generate **1404** a Radio Resource Control (RRC) message **1282** that includes the user equipment (UE) multiple-user multiple-input and multiple-output (MU-MIMO) configuration **1283**. The radio network controller (RNC) **1275** may send **1406** the Radio Resource Control (RRC) message **1282** to a Node B **1202** that forwards it to the user equipment (UE) **1204**. As discussed above in relation to FIG. **12**, the Radio Resource Control (RRC) message **1282** may also include the channel quality indicator (CQI) report configuration **1284** changes for the user equipment (UE) and high-speed shared control channel (HS-SCCH) fields reinterpretation **1285** changes for the user equipment (UE) **1204**.

[0135] FIG. **15** is a block diagram illustrating communications between a Node B **1502** and a radio network controller (RNC) **1575** in a wireless communications network **1500**. The Node B **1502** of FIG. **15** may be one configuration of the Node B **202** of FIG. **2**. The radio network controller (RNC) **1575** of FIG. **15** may be one configuration of the radio network controller (RNC) **1175** of FIG. **11**. The wireless communications network **1500** may operate using High-Speed Packet Access (HSPA). The Node B **1502** may be capable of multiple-user multiple-input and multiple-output (MU-MIMO) operations. Communications between a Node B **1502** and a radio network controller (RNC) **1575** may take place over the Iub interface **1177** (i.e., layer).

[0136] The Node B **1502** may send a message to the radio network controller (RNC) **1575** that indicates the Node B multiple-user multiple-input and multiple-output (MU-MIMO) scheduling capabilities **1586**. For example, the message may indicate that the Node B **1502** is capable of scheduling a multiple-user multiple-input and multiple-output (MU-MIMO) packet.

[0137] The radio network controller (RNC) **1575** may have information regarding the user equipments (UEs) **1104** being served by the Node B **1502**. For example, the radio network controller (RNC) **1575** may know the multiple-user multiple-input and multiple-output (MU-MIMO) capability and configuration of each user equipment (UE) **1587** being served by the Node B **1502**. The radio network controller (RNC) **1575** may send the multiple-user multiple-input and multiple-output (MU-MIMO) capability and configuration of the user equipments (UEs) **1587** to the Node B **1502** in a message. In one configuration, the message may also indicate that the high-speed shared control channel (HS-SCCH) fields encoding **1588***a-b* will need to be changed at the Node B **1502** (since some of the fields in the high-speed shared control channel (HS-SCCH) may be interpreted differently by a user equipment (UE)) **1104**.

[0138] FIG. **16** is a flow diagram of a method **1600** for signaling the multiple-user multiple-input and multiple-output (MU-MIMO) capability and configuration of a user equipment (UE) **1587** from a radio network controller (RNC) **1575** to a Node B **1502**. The method **1600** may be performed by a radio network controller (RNC) **1575**. Communications between the radio network controller (RNC) **1575** and the Node B **1502** may be over the Iub interface **1177**.

[0139] The radio network controller (RNC) **1575** may determine **1602** a multiple-user multiple-input and multiple-output (MU-MIMO) capability and configuration of a user equipment (UE) **1587**. In one configuration, the radio network controller (RNC) **1575** may determine the multiple-user multiple-input and multiple-output (MU-MIMO) capabilities and configurations of multiple user equipments (UEs) **1587**. The radio network controller (RNC) **1575** may generate **1604** a message that includes the multiple-user multiple-input and multiple-output (MU-MIMO) capability and configuration of

the user equipment (UE) **1587**. The radio network controller (RNC) **1575** may then send **1606** the message to a Node B **1502** over the Iub interface **1177**.

[0140] FIG. **17** is a flow diagram of a method **1700** for signaling a Node B multiple-user multiple-input and multiple-output (MU-MIMO) scheduling capability **1586** to a radio network controller (RNC) **1575**. The method **1700** may be performed by a Node B **1502**. Communications between the Node B **1502** and the radio network controller (RNC) **1575** may be over the Iub interface **1177**.

[0141] The Node B **1502** may determine **1702** the Node B multiple-user multiple-input and multiple-output (MU-MIMO) scheduling capability **1586** for transmissions. For example, the Node B **1502** may determine how often multiple-user multiple-input and multiple-output (MU-MIMO) transmissions can be scheduled, the power available for multiple-user multiple-input and multiple-output (MU-MIMO) transmissions and the current load of the Node B **1502**. The Node B **1502** may then generate **1704** a message that includes the Node B multiple-user multiple-input and multiple-output (MU-MIMO) scheduling capability **1586** for transmissions. The Node B **1502** may send **1706** the message to a radio network controller (RNC) **1575** over the Iub interface **1177**.

[0142] FIG. **18** is a block diagram illustrating the transmission of a high-speed shared control channel (HS-SCCH) order **1889** from a Node B **1802** to a user equipment (UE) **1804** in a wireless communications network **1800**. The user equipment (UE) **1804** of FIG. **18** may be one configuration of the user equipment (UE) **204** of FIG. **2**. The Node B **1802** of FIG. **18** may be one configuration of the Node B **202** of FIG. **2**. The wireless communications network **1800** may operate using High-Speed Packet Access (HSPA). Both the Node B **1802** and the user equipment (UE) **1804** may be capable of multiple-user multiple-input and multiple-output (MU-MIMO) operations. The high-speed shared control channel (HS-SCCH) is a downlink physical channel used to carry downlink signaling information related to a high-speed downlink shared channel (HS-DSCH) transmission. A Node B **1802** may use a high-speed shared control channel (HS-SCCH) order **1889** to activate/deactivate the uplink discontinuous transmission (UL-DTX) and/or the downlink discontinuous receiving (DL-DRX) by sending them as L**1**/PHY signaling commands to the user equipment (UE) **1804**.

[0143] The high-speed shared control channel (HS-SCCH) order **1889** may include an activate/deactivate multiple-user multiple-input and multiple-output (MU-MIMO) command **1890**. The activate/deactivate multiple-user multiple-input and multiple-output (MU-MIMO) command **1890** may activate or deactivate multiple-user multiple-input and multiple-output (MU-MIMO) operations at the user equipment (UE) **1804**. There may be instances when multiple-user multiple-input and multiple-output (MU-MIMO) operation is not highly beneficial (e.g., only two user equipments (UEs) **1804** are being served). There may also be instances when multiple-user multiple-input and multiple-output (MU-MIMO) operation would be particularly beneficial (e.g., multiple user equipments (UEs) **1804** requesting large amounts of traffic).

[0144] The high-speed shared control channel (HS-SCCH) order **1889** may also include a channel quality indicator (CQI) reporting change **1891**. The user equipment (UE) **1804** may thus be instructed on changes to channel quality indicator (CQI) reporting. The high-speed shared control channel (HS-SCCH) order **1889** may further include a high-speed shared control channel (HS-SCCH) fields interpretation change **1892**. Upon receiving the high-speed shared control channel (HS-SCCH) order **1889**, the user equipment (UE) **1804** may activate/deactivate multiple-user multiple-input and multiple-output (MU-MIMO) operations, apply the channel quality indicator (CQI) reporting change **1891** and/or apply the high-speed shared control channel (HS-SCCH) fields interpretation change **1892**.

[0145] FIG. **19** is a flow diagram of a method **1900** for sending a high-speed shared control channel (HS-SCCH) order **1889** to a user equipment (UE) **1804**. The method **1900** may be performed by a Node B **1802**. The Node B **1802** may determine **1902** to activate/deactivate multiple-user multiple-input and multiple-output (MU-MIMO) operations on a user equipment (UE) **1804**. In one configuration, the Node B **1802** may further determine to change the channel quality indicator (CQI) reporting configurations of the user equipment (UE) **1804**. In yet another configuration, the Node B **1802** may determine to change the high-speed shared control channel (HS-SCCH) fields interpretation of the user equipment (UE) **1804**.

[0146] The Node B **1802** may then generate **1904** a high-speed shared control channel (HS-SCCH) order **1889**. As discussed above, the high-speed shared control channel (HS-SCCH) order **1889** may include an activation/deactivation of multiple-user multiple-input and multiple-output (MU-MIMO) operations command **1890**, a channel quality indicator (CQI) reporting change **1891** and/or a high-speed shared control channel (HS-SCCH) fields interpretation change **1892**. The Node B **1802** may then send **1906** the high-speed shared control channel (HS-SCCH) order **1889** to the user equipment (UE) **1804**.

[0147] FIG. **20** is a block diagram illustrating multiple-user multiple-input and multiple-output (MU-MIMO) scheduling **2094***a-n* transmitted from a Node B **2002** to a user equipment (UE) **2004** for every transmission time interval (TTI) **2093***a-n* in a wireless communications network **2000**. The user equipment (UE) **2004** of FIG. **20** may be one configuration of the user equipment (UE) **204** of FIG. **2**. The Node B **2002** of FIG. **20** may be one configuration of the Node B **202** of FIG. **2**. The wireless communications network **2000** may operate using High-Speed Packet Access (HSPA). Both the Node B **2002** and the user equipment (UE) **2004** may be capable of multiple-user multiple-input and multiple-output (MU-MIMO) operations. A Node B **2002** may signal a user equipment (UE) **2004** regarding multiple-user multiple-input and multiple-output (MU-MIMO) scheduling **2094**. This signaling may be "long-term," where the signaling does not occur every transmission time interval (TTI) **2093**. For example, certain user equipments (UEs) **2004** do not need such signaling for each transmission time interval (TTI) **2093**.

[0148] However, there may be cases where a user equipment (UE) **2004** needs multiple-user multiple-input and multiple-output (MU-MIMO) scheduling **2094** for each transmission time interval (TTI) **2093**. For example, a Node B **2002** may send multiple-user multiple-input and multiple-output (MU-MIMO) scheduling **2094** information (e.g., whether or not multiple-user multiple-input and multiple-output (MU-MIMO) transmissions are being used in a particular transmission time interval (TTI) **2093**) to a user equipment (UE) **2004** during each transmission time interval (TTI) **2093**. This may be accomplished in several ways. In a first option, a high-speed shared control channel (HS-SCCH) may be configured on a common High Speed Downlink Shared Channel—Radio Network Temporary Identifier (H-RNTI).

The common High Speed Downlink Shared Channel—Radio Network Temporary Identifier (H-RNTI) may be decoded by all of the user equipments (UEs) **2004** in a cell. Thus, the multiple-user multiple-input and multiple-output (MU-MIMO) scheduling **2094** information may be sent via a high-speed shared control channel (HS-SCCH) on a common High Speed Downlink Shared Channel—Radio Network Temporary Identifier (H-RNTI).

[0149] In a second option, the Node B **2002** may signal multiple-user multiple-input and multiple-output (MU-MIMO) transmission through certain fields of the high-speed shared control channel (HS-SCCH). For example, certain bits of the channelization code set could be used for this purpose. The user equipment (UE) **2004** may re-interpret the bits (which would otherwise be interpreted differently) to mean that multiple-user multiple-input and multiple-output (MU-MIMO) scheduling is happening for this particular transmission time interval (TTI) **2093**. On the other hand, the Node B **2002** could set the secondary transport block size field of the high-speed shared control channel (HS-SCCH) to 111111 and the corresponding redundancy version field could be set to 0. Again, the user equipment (UE) **2004** may re-interpret the bits (which would otherwise be interpreted differently) to mean an indication of multiple-user multiple-input and multiple-output (MU-MIMO) transmission in this particular transmission time interval (TTI) **2093**.

[0150] When a user equipment (UE) **2004** is Release-7 capable or Transmit Antenna Array (TxAA) capable, other options may be used for multiple-user multiple-input and multiple-output (MU-MIMO) scheduling **2094**. One option (when the user equipment (UE) **2004** is Release-7 or TxAA capable) is for the Node B **2002** to use a typically unused combination of a modulation scheme and a number of transport blocks in a high-speed shared control channel (HS-SCCH) to convey multiple-user multiple-input and multiple-output (MU-MIMO) scheduling **2094** to the user equipment (UE) **2004** for each transmission time interval (TTI) **2093**. For a user equipment (UE) **2004** that is Transmit Antenna Array (TxAA) capable, the Node B **2002** may use one bit of a Hybrid Automatic Repeat Request (HARD) processing identification (ID) in a high-speed shared control channel (HS-SCCH) to convey the multiple-user multiple-input and multiple-output (MU-MIMO) scheduling **2094** information to a user equipment (UE) **2004** for each transmission time interval (TTI) **2093**.

[0151] FIG. **21** illustrates certain components that may be included within a base station **2102**. A base station may also be referred to as, and may include some or all of the functionality of, an access point, a broadcast transmitter, a NodeB, an evolved NodeB, etc. The base station **2102** includes a processor **2103**. The processor **2103** may be a general purpose single- or multi-chip microprocessor (e.g., an ARM), a special purpose microprocessor (e.g., a digital signal processor (DSP)), a microcontroller, a programmable gate array, etc. The processor **2103** may be referred to as a central processing unit (CPU). Although just a single processor **2103** is shown in the base station **2102** of FIG. **21**, in an alternative configuration, a combination of processors (e.g., an ARM and DSP) could be used.

[0152] The base station **2102** also includes memory **2105**. The memory **2105** may be any electronic component capable of storing electronic information. The memory **2105** may be embodied as random access memory (RAM), read only memory (ROM), magnetic disk storage media, optical storage media, flash memory devices in RAM, on-board memory included with the processor, EPROM memory, EEPROM memory, registers, and so forth, including combinations thereof.

[0153] Data **2107***a* and instructions **2109***a* may be stored in the memory **2105**. The instructions **2109***a* may be executable by the processor **2103** to implement the methods disclosed herein. Executing the instructions **2109***a* may involve the use of the data **2107***a* that is stored in the memory **2105**. When the processor **2103** executes the instructions **2109***a*, various portions of the instructions **2109***b* may be loaded onto the processor **2103**, and various pieces of data **2107***b* may be loaded onto the processor **2103**.

[0154] The base station **2102** may also include a transmitter **2111** and a receiver **2113** to allow transmission and reception of signals to and from the base station **2102**. The transmitter **2111** and receiver **2113** may be collectively referred to as a transceiver **2115**. Multiple antennas **2117***a-b* may be electrically coupled to the transceiver **2115**. The base station **2102** may also include (not shown) multiple transmitters, multiple receivers, multiple transceivers and/or additional antennas.

[0155] The base station **2102** may include a digital signal processor (DSP) **2121**. The base station **2102** may also include a communications interface **2123**. The communications interface **2123** may allow a user to interact with the base station **2102**.

[0156] The various components of the base station **2102** may be coupled together by one or more buses, which may include a power bus, a control signal bus, a status signal bus, a data bus, etc. For the sake of clarity, the various buses are illustrated in FIG. **21** as a bus system **2119**.

[0157] FIG. **22** illustrates certain components that may be included within a wireless communication device **2204**. The wireless communication device **2204** may be an access terminal, a mobile station, a user equipment (UE), etc. The wireless communication device **2204** includes a processor **2203**. The processor **2203** may be a general purpose single- or multi-chip microprocessor (e.g., an ARM), a special purpose microprocessor (e.g., a digital signal processor (DSP)), a microcontroller, a programmable gate array, etc. The processor **2203** may be referred to as a central processing unit (CPU). Although just a single processor **2203** is shown in the wireless communication device **2204** of FIG. **22**, in an alternative configuration, a combination of processors (e.g., an ARM and DSP) could be used.

[0158] The wireless communication device **2204** also includes memory **2205**. The memory **2205** may be any electronic component capable of storing electronic information. The memory **2205** may be embodied as random access memory (RAM), read-only memory (ROM), magnetic disk storage media, optical storage media, flash memory devices in RAM, on-board memory included with the processor, EPROM memory, EEPROM memory, registers, and so forth, including combinations thereof.

[0159] Data **2207***a* and instructions **2209***a* may be stored in the memory **2205**. The instructions **2209***a* may be executable by the processor **2203** to implement the methods disclosed herein. Executing the instructions **2209***a* may involve the use of the data **2207***a* that is stored in the memory **2205**. When the processor **2203** executes the instructions **2209***a*, various portions of the instructions **2209***b* may be loaded onto the processor **2203**, and various pieces of data **2207***b* may be loaded onto the processor **2203**.

[0160] The wireless communication device **2204** may also include a transmitter **2211** and a receiver **2213** to allow transmission and reception of signals to and from the wireless communication device **2204**. The transmitter **2211** and receiver **2213** may be collectively referred to as a transceiver **2215**. Multiple antennas **2217***a-b* may be electrically coupled to the transceiver **2215**. The wireless communication device **2204** may also include (not shown) multiple transmitters, multiple receivers, multiple transceivers and/or additional antennas.

[0161] The wireless communication device **2204** may include a digital signal processor (DSP) **2221**. The wireless communication device **2204** may also include a communications interface **2223**. The communications interface **2223** may allow a user to interact with the wireless communication device **2204**.

[0162] The various components of the wireless communication device **2204** may be coupled together by one or more buses, which may include a power bus, a control signal bus, a status signal bus, a data bus, etc. For the sake of clarity, the various buses are illustrated in FIG. **22** as a bus system **2219**.

[0163] FIG. **23** illustrates certain components that may be included within a radio network controller (RNC) **2375**. A radio network controller (RNC) **2375** is a governing element in the UMTS radio access network (UTRAN) that is responsible for controlling the base stations **2102** (or Node Bs **1102**) that are connected to it. The radio network controller (RNC) **2375** may be connected to a circuit switched core network through a media gateway. The radio network controller (RNC) **2375** includes a processor **2303**. The processor **2303** may be a general purpose single- or multi-chip microprocessor (e.g., an ARM), a special purpose microprocessor (e.g., a digital signal processor (DSP)), a microcontroller, a programmable gate array, etc. The processor **2303** may be referred to as a central processing unit (CPU). Although just a single processor **2303** is shown in the radio network controller (RNC) **2375** of FIG. **23**, in an alternative configuration, a combination of processors (e.g., an ARM and DSP) could be used.

[0164] The radio network controller (RNC) **2375** also includes memory **2305**. The memory **2305** may be any electronic component capable of storing electronic information. The memory **2305** may be embodied as random access memory (RAM), read only memory (ROM), magnetic disk storage media, optical storage media, flash memory devices in RAM, on-board memory included with the processor, EPROM memory, EEPROM memory, registers, and so forth, including combinations thereof.

[0165] Data **2307***a* and instructions **2309***a* may be stored in the memory **2305**. The instructions **2309***a* may be executable by the processor **2303** to implement the methods disclosed herein. Executing the instructions **2309***a* may involve the use of the data **2307***a* that is stored in the memory **2305**. When the processor **2303** executes the instructions **2309***a*, various portions of the instructions **2309***b* may be loaded onto the processor **2303**, and various pieces of data **2307***b* may be loaded onto the processor **2303**.

[0166] The radio network controller (RNC) **2375** may also include a transmitter **2311** and a receiver **2313** to allow transmission and reception of signals to and from the radio network controller (RNC) **2375**. The transmitter **2311** and receiver **2313** may be collectively referred to as a transceiver **2315**. Multiple antennas **2317***a-b* may be electrically coupled to the transceiver **2315**. The radio network controller (RNC) **2375** may also include (not shown) multiple transmitters, multiple receivers, multiple transceivers and/or additional antennas.

[0167] The radio network controller (RNC) **2375** may include a digital signal processor (DSP) **2321**. The radio network controller (RNC) **2375** may also include a communications interface **2323**. The communications interface **2323** may allow a user to interact with the radio network controller (RNC) **2375**.

[0168] The various components of the radio network controller (RNC) **2375** may be coupled together by one or more buses, which may include a power bus, a control signal bus, a status signal bus, a data bus, etc. For the sake of clarity, the various buses are illustrated in FIG. **23** as a bus system **2319**.

[0169] The techniques described herein may be used for various communication systems, including communication systems that are based on an orthogonal multiplexing scheme. Examples of such communication systems include Orthogonal Frequency Division Multiple Access (OFDMA) systems, Single-Carrier Frequency Division Multiple Access (SC-FDMA) systems, and so forth. An OFDMA system utilizes orthogonal frequency division multiplexing (OFDM), which is a modulation technique that partitions the overall system bandwidth into multiple orthogonal sub-carriers. These sub-carriers may also be called tones, bins, etc. With OFDM, each sub-carrier may be independently modulated with data. An SC-FDMA system may utilize interleaved FDMA (IFDMA) to transmit on sub-carriers that are distributed across the system bandwidth, localized FDMA (LFDMA) to transmit on a block of adjacent sub-carriers, or enhanced FDMA (EFDMA) to transmit on multiple blocks of adjacent sub-carriers. In general, modulation symbols are sent in the frequency domain with OFDM and in the time domain with SC-FDMA.

[0170] The term "determining" encompasses a wide variety of actions and, therefore, "determining" can include calculating, computing, processing, deriving, investigating, looking up (e.g., looking up in a table, a database or another data structure), ascertaining and the like. Also, "determining" can include receiving (e.g., receiving information), accessing (e.g., accessing data in a memory) and the like. Also, "determining" can include resolving, selecting, choosing, establishing and the like.

[0171] The phrase "based on" does not mean "based only on," unless expressly specified otherwise. In other words, the phrase "based on" describes both "based only on" and "based at least on."

[0172] The term "processor" should be interpreted broadly to encompass a general purpose processor, a central processing unit (CPU), a microprocessor, a digital signal processor (DSP), a controller, a microcontroller, a state machine, and so forth. Under some circumstances, a "processor" may refer to an application specific integrated circuit (ASIC), a programmable logic device (PLD), a field programmable gate array (FPGA), etc. The term "processor" may refer to a combination of processing devices, e.g., a combination of a DSP and a microprocessor, a plurality of microprocessors, one or more microprocessors in conjunction with a DSP core, or any other such configuration.

[0173] The term "memory" should be interpreted broadly to encompass any electronic component capable of storing electronic information. The term memory may refer to various types of processor-readable media such as random access memory (RAM), read-only memory (ROM), non-volatile

random access memory (NVRAM), programmable read-only memory (PROM), erasable programmable read-only memory (EPROM), electrically erasable PROM (EEPROM), flash memory, magnetic or optical data storage, registers, etc. Memory is said to be in electronic communication with a processor if the processor can read information from and/or write information to the memory. Memory that is integral to a processor is in electronic communication with the processor.

[0174] The terms "instructions" and "code" should be interpreted broadly to include any type of computer-readable statement(s). For example, the terms "instructions" and "code" may refer to one or more programs, routines, subroutines, functions, procedures, etc. "Instructions" and "code" may comprise a single computer-readable statement or many computer-readable statements.

[0175] The functions described herein may be implemented in software or firmware being executed by hardware. The functions may be stored as one or more instructions on a computer-readable medium. The terms "computer-readable medium" or "computer-program product" refers to any tangible storage medium that can be accessed by a computer or a processor. By way of example, and not limitation, a computer-readable medium may comprise RAM, ROM, EEPROM, CD-ROM or other optical disk storage, magnetic disk storage or other magnetic storage devices, or any other medium that can be used to carry or store desired program code in the form of instructions or data structures and that can be accessed by a computer. Disk and disc, as used herein, includes compact disc (CD), laser disc, optical disc, digital versatile disc (DVD), floppy disk and Blu-ray® disc where disks usually reproduce data magnetically, while discs reproduce data optically with lasers.

[0176] The methods disclosed herein comprise one or more steps or actions for achieving the described method. The method steps and/or actions may be interchanged with one another without departing from the scope of the claims. In other words, unless a specific order of steps or actions is required for proper operation of the method that is being described, the order and/or use of specific steps and/or actions may be modified without departing from the scope of the claims.

[0177] Further, it should be appreciated that modules and/or other appropriate means for performing the methods and techniques described herein, such as those illustrated by FIGS. **3**, **6**, **13**, **14**, **16**, **17** and **19**, can be downloaded and/or otherwise obtained by a device. For example, a device may be coupled to a server to facilitate the transfer of means for performing the methods described herein. Alternatively, various methods described herein can be provided via a storage means (e.g., random access memory (RAM), read-only memory (ROM), a physical storage medium such as a compact disc (CD) or floppy disk, etc.), such that a device may obtain the various methods upon coupling or providing the storage means to the device.

[0178] It is to be understood that the claims are not limited to the precise configuration and components illustrated above. Various modifications, changes and variations may be made in the arrangement, operation and details of the systems, methods, and apparatus described herein without departing from the scope of the claims.

What is claimed is:

1. A method for signaling multiple-user multiple-input and multiple-output in a high speed packet access system, comprising:

determining a multiple-user multiple-input and multiple-output parameter;

generating a message that comprises the multiple-user multiple-input and multiple-output parameter; and

sending the message to a wireless device.

2. The method of claim **1**, wherein the method is performed by a radio network controller, wherein the wireless device is a Node B that forwards the message to a user equipment, wherein the multiple-user multiple-input and multiple-output parameter comprises a user equipment multiple-user multiple-input and multiple-output configuration required of the user equipment to support multiple-user multiple-input and multiple-output operations, and wherein the message is a radio resource control message.

3. The method of claim **2**, wherein the multiple-user multiple-input and multiple-output parameter further comprises a channel quality indicator report configuration.

4. The method of claim **2**, wherein the multiple-user multiple-input and multiple-output parameter further comprises a high-speed shared control channel fields reinterpretation.

5. The method of claim **1**, wherein the method is performed by a user equipment, and wherein the wireless device is a Node B that forwards the message to a radio network controller.

6. The method of claim **5**, wherein the multiple-user multiple-input and multiple-output parameter comprises a multiple-user multiple-input and multiple-output operation capability of the user equipment, and wherein the message is a radio resource control message.

7. The method of claim **5**, wherein the multiple-user multiple-input and multiple-output parameter comprises a multiple-user multiple-input and multiple-output capable user equipment category.

8. The method of claim **1**, wherein the method is performed by a Node B, wherein the wireless device is a radio network controller, and wherein the multiple-user multiple-input and multiple-output parameter comprises a Node B multiple-user multiple-input and multiple-output scheduling capability.

9. The method of claim **1**, wherein the method is performed by a radio network controller, wherein the wireless device is a Node B, and wherein the multiple-user multiple-input and multiple-output parameter comprises a multiple-user multiple-input and multiple-output capability and configuration of a user equipment being served by the Node B.

10. The method of claim **9**, wherein the multiple-user multiple-input and multiple-output parameter further comprises a new high-speed shared control channel fields encoding.

11. The method of claim **1**, wherein the method is performed by a Node B, wherein the wireless device is a user equipment, and wherein the multiple-user multiple-input and multiple-output parameter comprises multiple-user multiple-input and multiple-output scheduling information, wherein new multiple-user multiple-input and multiple-output scheduling information is sent for each transmission time interval.

12. The method of claim **11**, wherein the multiple-user multiple-input and multiple-output scheduling information is sent via a high-speed shared control channel on a common high speed downlink shared channel—radio network temporary identifier.

13. The method of claim **11**, wherein the multiple-user multiple-input and multiple-output scheduling information is sent via fields of a Type-3 dual stream high-speed shared control channel, wherein the fields comprise certain bits of a channelization code.

14. The method of claim **11**, wherein the multiple-user multiple-input and multiple-output scheduling information is sent via fields of a Type-3 dual stream high-speed shared control channel, wherein the fields comprise a combination of a secondary transport block size being set to 111111 and a corresponding redundancy version being set to 0.

15. The method of claim **11**, wherein the user equipment is transmit antenna array capable, and wherein the multiple-user multiple-input and multiple-output scheduling information is sent via a combination of a modulation scheme and a number of transport blocks in a high-speed shared control channel.

16. The method of claim **11**, wherein the user equipment is transmit antenna array capable, and wherein the multiple-user multiple-input and multiple-output scheduling information is sent via a hybrid automatic repeat request processing identification in a high-speed shared control channel.

17. The method of claim **1**, wherein the method is performed by a Node B, wherein the wireless device is a user equipment, wherein the multiple-user multiple-input and multiple-output parameter comprises a command to activate/deactivate multiple-user multiple-input and multiple-output operations on the user equipment, and wherein the message comprises a high-speed shared control channel order.

18. The method of claim **17**, wherein the high-speed shared control channel order further comprises a channel quality indicator reporting change for the user equipment.

19. The method of claim **17**, wherein the high-speed shared control channel order further comprises a high-speed shared control channel fields interpretation change for the user equipment.

20. A wireless device configured for signaling multiple-user multiple-input and multiple-output in a high speed packet access system, comprising:

a processor;

memory in electronic communication with the processor;

instructions stored in the memory, the instructions being executable by the processor to:

determine a multiple-user multiple-input and multiple-output parameter;

generate a message that comprises the multiple-user multiple-input and multiple-output parameter; and

send the message to a second wireless device.

21. The wireless device of claim **20**, wherein the wireless device is a radio network controller, wherein the second wireless device is a Node B that forwards the message to a user equipment, wherein the multiple-user multiple-input and multiple-output parameter comprises a user equipment multiple-user multiple-input and multiple-output configuration required of the user equipment to support multiple-user multiple-input and multiple-output operations, and wherein the message is a radio resource control message.

22. The wireless device of claim **21**, wherein the multiple-user multiple-input and multiple-output parameter further comprises a channel quality indicator report configuration.

23. The wireless device of claim **21**, wherein the multiple-user multiple-input and multiple-output parameter further comprises a high-speed shared control channel fields reinterpretation.

24. The wireless device of claim **20**, wherein the wireless device is a user equipment, and wherein the second wireless device is a Node B that forwards the message to a radio network controller.

25. The wireless device of claim **24**, wherein the multiple-user multiple-input and multiple-output parameter comprises a multiple-user multiple-input and multiple-output operation capability of the user equipment, and wherein the message is a radio resource control message.

26. The wireless device of claim **24**, wherein the multiple-user multiple-input and multiple-output parameter comprises a multiple-user multiple-input and multiple-output capable user equipment category.

27. The wireless device of claim **20**, wherein the wireless device is a Node B, wherein the second wireless device is a radio network controller, and wherein the multiple-user multiple-input and multiple-output parameter comprises a Node B multiple-user multiple-input and multiple-output scheduling capability.

28. The wireless device of claim **20**, wherein the wireless device is a radio network controller, wherein the second wireless device is a Node B, and wherein the multiple-user multiple-input and multiple-output parameter comprises a multiple-user multiple-input and multiple-output capability and configuration of a user equipment being served by the Node B.

29. The wireless device of claim **28**, wherein the multiple-user multiple-input and multiple-output parameter further comprises a new high-speed shared control channel fields encoding.

30. The wireless device of claim **20**, wherein the wireless device is a Node B, wherein the second wireless device is a user equipment, and wherein the multiple-user multiple-input and multiple-output parameter comprises multiple-user multiple-input and multiple-output scheduling information, wherein new multiple-user multiple-input and multiple-output scheduling information is sent for each transmission time interval.

31. The wireless device of claim **30**, wherein the multiple-user multiple-input and multiple-output scheduling information is sent via a high-speed shared control channel on a common high speed downlink shared channel—radio network temporary identifier.

32. The wireless device of claim **30**, wherein the multiple-user multiple-input and multiple-output scheduling information is sent via fields of a Type-3 dual stream high-speed shared control channel, wherein the fields comprise certain bits of a channelization code.

33. The wireless device of claim **30**, wherein the multiple-user multiple-input and multiple-output scheduling information is sent via fields of a Type-3 dual stream high-speed shared control channel, wherein the fields comprise a combination of a secondary transport block size being set to 111111 and a corresponding redundancy version being set to 0.

34. The wireless device of claim **30**, wherein the wireless device is transmit antenna array capable, and wherein the multiple-user multiple-input and multiple-output scheduling information is sent via a combination of a modulation scheme and a number of transport blocks in a high-speed shared control channel.

35. The wireless device of claim **30**, wherein the wireless device is transmit antenna array capable, and wherein the multiple-user multiple-input and multiple-output scheduling

information is sent via a hybrid automatic repeat request processing identification in a high-speed shared control channel.

36. The wireless device of claim **20**, wherein the wireless device is a Node B, wherein the second wireless device is a user equipment, wherein the multiple-user multiple-input and multiple-output parameter comprises a command to activate/deactivate multiple-user multiple-input and multiple-output operations on the user equipment, and wherein the message comprises a high-speed shared control channel order.

37. The wireless device of claim **36**, wherein the high-speed shared control channel order further comprises a channel quality indicator reporting change for the user equipment.

38. The wireless device of claim **36**, wherein the high-speed shared control channel order further comprises a high-speed shared control channel fields interpretation change for the user equipment.

39. A wireless device configured for signaling multiple-user multiple-input and multiple-output in a high speed packet access system, comprising:

means for determining a multiple-user multiple-input and multiple-output parameter;

means for generating a message that comprises the multiple-user multiple-input and multiple-output parameter; and

means for sending the message to a wireless device.

40. A computer-program product for signaling multiple-user multiple-input and multiple-output in a high-speed packet access system, the computer-program product comprising a non-transitory computer-readable medium having instructions thereon, the instructions comprising:

code for causing a first wireless device to determine a multiple-user multiple-input and multiple-output parameter;

code for causing a first wireless device to generate a message that comprises the multiple-user multiple-input and multiple-output parameter; and

code for causing the first wireless device to send the message to a second wireless device.

* * * * *