BPG Columns 100, 140, 200, 300 and 450 series

BPG™ columns are glass chromatography columns designed for industrial applications which demand high standards of hygiene. The columns are constructed from component materials of the highest quality and withstand the harsh conditions used for cleaning in place of packed separation media. An overview of column characteristics is shown in Table 1. The columns are characterized by:

- Hygienic design and operation. Microbial attachment and growth is hindered through the use of calibrated precision glass, high grade electropolished stainless steel and an absence of dead pockets.
- Easy, efficient packing and running with the singlescrew adapter.
- Operating pressures matching most BioProcess™ Media.
- All polymeric materials meet the requirements for USP class VI, described in USP <88> Biological Reactivity Tests, *In Vivo*.
- Comprehensive documentation.

Fig 1. BPG column family.

General description

BPG columns are designed to meet the needs of process development and biopharmaceutical manufacture:

- Scalable. Inner diameters (i.d.) of 100 mm to 450 mm, and bed volumes from 2 up to 121 liters.
- Pressure rating up to 8 bar.
- Low flow resistance.
- Single screw adapter.
- Suitability for use in ion exchange, gel filtration, affinity, and hydrophobic interaction chromatography with compatabile BioProcess Media.
- Tubing connections made with hygienic sanitary clamp fittings.
- All gaskets recognized as suitable for use in biopharmaceutical production.
- An instruction manual containing full details of components, packing, testing, procedures for cleaning and sanitizing, troubleshooting, and spare parts lists.
- Packing devices available for long bed heights.
- IQ/OQ documentation packages available.

Design features

Column tube

The columns are designed to very high standards and use high quality materials:

- Manufactured from calibrated precision borosilicate glass.
- Exact internal diameter tolerance of the glass tube.
- Thin O-ring between the column tube and the adapter/endpiece forms a very tight seal.
- Minimum dead volume.
- Liquid distribution over a great surface area.

BioProcess

Liquid distribution

Efficient liquid distribution is crucial for optimal column performance. In BPG columns this is assured through:

- Adapters and end-pieces based on the well proven design of a single channel inlet/outlet.
- Support nets with a coarse, open structure to distribute liquid from the central inlet rapidly and uniformly over the entire surface area.
- Thin nets to maintain even pressure distribution over the bed surface and permit liquid to pass through quickly and evenly onto the bed, without creating extra back-pressure.
- Polypropylene distribution plates in the adapter, which give uniform distribution/collection of liquid at the interface between the net and the packed bed.

Fig 2. Adapter and net. Flat surfaces give even spread of sample.

Operation

Hygiene

BPG columns are intended for use in environments with some of the toughest regulatory controls:

- Design and materials of construction ensure hygienic operation.
- Little maintenance is required in routine use. The columns are easy to keep clean and free from microbial contamination.
- Autoclavable when disassembled.
- All tubing connections are made with sanitary clamp fittings.
- Columns are easily sanitized. A packed BPG column was subjected to microbial challenge testing using five microorganisms recommended by the United States Pharmacopoeia (USP XX III). Sodium hydroxide (NaOH) was the anti-microbial agent. The study showed that 0.5 M NaOH applied for 30–60 minutes is a good basis for developing an effective sanitisation procedure. The studies are presented in Application Notes 18-1020-86 and 18-1117-76.

Easy to pack

The design of adapter with a single-screw makes light work of all adapter movement. It is easily adjusted during packing and operation, even on the largest columns.

Table 1. Overview of BPG columns

			Bed height (cm)				Volume (l)							
Column Diameter (mm)	Column Area (cm^2)	Column Height (cm)	Min	Max[1]	Packing with extension[2]	Running with extention[3]	Min	Max[1]	Packing with extension[2]	Running with extention[3]	Max. pressure (bar g)[4]	Total weight (kg)	Adapter weight (kg)	Overall dimensions (cm) D×W×H
100	78.5	50	0	26	34	45	0.0	2.0	2.7	3.5	8	15	7	48×48×127
100	78.5	75	25	41	55	65	2.0	3.2	4.3	5.1	8	16	7	48×48×152
100	78.5	95	45	54	72	78	3.5	4.2	5.7	6.1	8	17	7	48×48×172
140	154	50	0	26	34	45	0.0	4.0	5.2	6.9	6	25	11	59×59×127
140	154	75	25	41	55	65	3.9	6.3	8.5	10.0	6	26	11	59×59×152
140	154	95	45	54	72	78	6.9	8.3	11.1	12.0	6	27	11	59×59×172
200	314	50	0	26	34	45	0.0	8.2	10.7	14.1	6	34	13	59×59×127
200	314	75	25	41	55	65	7.8	12.9	17.3	20.4	6	36	13	59×59×152
200	314	95	45	54	72	78	14.1	17.0	22.6	24.5	6	39	13	59×59×172
296	688	50	0	26	34	45	0.0	17.9	23.4	31.0	4	68	29	69×69×133
296	688	75	25	41	55	65	17.2	28.2	37.8	44.7	4	73	29	69×69×158
296	688	95	45	54	72	78	31.0	37.2	49.5	53.7	4	78	29	69×69×178
446	1562	50	11	22	30	45	17.2	34.4	46.9	70.3	2.5	200	100	80×80×140
446	1562	75	36	38	51	62	56.2	59.4	79.7	96.8	2.5	215	100	80×80×165
446	1562	100	61	64	72	78	95.3	100.0	112.5	121.8	2.5	230	100	80×80×190

Bed volumes and bed heights are based on a slurry concentration of 75% and a packing compression of 15%. Where compression is the difference in volume between a sedimented bed and a bed under pressure.

[1] Values achievable without a packing extension

[2] Values achievable when a packing extension is used for sedimentation of the bed (75% of the slurry must fit into the column and extension when the adapter is mounted).

[3] Values achievable when the packing extension remains attached to the column for the duration of column use. The adapter must seal at least 5 cm into the column tube to avoid high tensions in the glass tube

[4] Use a manometer to monitor the pressure (to order, see Tables 5 and 6

IPR2023-00604 - U.S. Patent No. 11,331,598 Hugel Inc v. Medytox Inc. Hugel Ex. 1029 - Page 2

Separation at lab scale

Column: XK16/20 (i.d. 16 mm), 10 cm bed height, 20 ml
Medium: Phenyl Sepharose™ 6 Fast Flow (high sub)
Sample: Yeast supernantant, $(NH_4)_2SO_4$ added to 0.5 M
Loading: 450 ml sample: 8.1 mg EGF; 0.41 mg/ml medium
Starting buffer: 0.5 M ammomium sulfate, 20 mM sodium phosphate pH 7.0
Elution buffer: 20 mM sodium phosphate pH 7.0
Flow rate:
Loading: 300 cm/h, 600 ml/h
Eluiton: 60 cm/h, 120 ml/h
Purification time: 1.5 h
System: BioPilot™

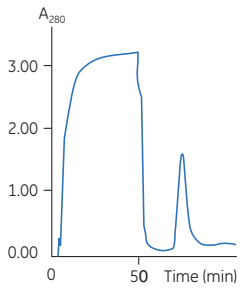

Separation at process scale

Column: BPG 300/500 (i.d. 300 mm), 10 cm bed height, 7.1 L
Medium: Phenyl Sepharose 6 Fast Flow (high sub)
Sample: Yeast supernantant, $(NH_4)_2SO_4$ added to 0.5 M
Loading: 80 L sample: 2.56 g EGF; 0.36 mg/ml medium
Starting buffer: 0.5 M ammomium sulfate, 20 mM sodium phosphate pH 7.0
Elution buffer: 20 mM sodium phosphate pH 7.0
Flow rate:
Loading: 300 cm/h, 2100 L/h
Eluiton: 60 cm/h, 42 L/h
Purification time: 1.5 h
System: BioProcess controlled by UNICORN™

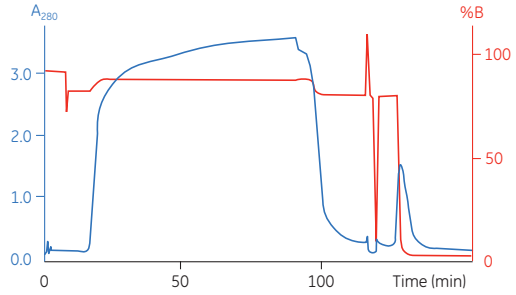

Fig 3. Development and scale-up of a chromatographic downstream process for the purification of recombinant EGF expressed as an extracellular protein from *S. cerevisiae*. The starting material was clarified supernatant. (Daniels, A.I., Petersson, N.T., Scandella, C. Poster presentation, Crystal City, USA, 1992.)

Table 2. Column component materials. Components may be considered to contain "wet" parts, parts coming into contact with process liquids, and dry parts. The table identifies the materials from which the "wet" and dry parts are manufactured

	Major Components							
	Adapter		Tube		End-piece		Stand	
Material	Wet	Dry	Wet	Dry	Wet	Dry	Wet	Dry
Borosilicate glass	–	–	*	–	–	–	–	–
Ethylene Propylene rubber (EPDM)	*	–	–	*	*	–	–	–
Stainless steel: ASTM 316L	*	*	–	*	*	–	–	*
ASTM 304[1]	–	–	–	–	–	–	–	–
Polypropylene (PP)	*	–	–	–	*	–	–	–
Polytetrafluoroethene (PTFE) (Teflon™)	–	–	–	–	*	*	–	–
Polyamide (PA) nylon (10 µm net)	*	–	–	–	*	–	–	–
Polyetheretherketone (PEEK)	–	*	–	–	–	–	–	–
Acetal plastic (POM)	–	*	–	–	–	–	–	–
Fluoroethenepropene (FEP)[2]	*	–	–	–	*	–	–	–
Polyurethane –	–	–	–	–	–	–	*	
Polyvinylchloride (PVC)[3]	–	–	–	–	–	–	–	–

[1] The clamps are made of stainless steel.
[2] Option to EPDM.
[3] The tubing is made of PVC.

Scalable

BPG columns are ideal for scaling up from smaller lab scale or method development columns. Figure 3 shows a chromatogram obtained with an XK 16/20 column, i.d. 16 mm, is consistent with the chromatogram obtained from the scaled up run on BPG 300/500 column, i.d. 300 mm. The scale up factor is 350 and no evidence of dilution or loss of recovery was detectable.

Materials

BPG columns are made with high quality materials (Table 2). All materials used in BPG columns meet the requirements described in the USP XX III:

- Materials are compatible with the liquids commonly used in process scale chromatography (including sanitization and cleaning agents such as NaOH and ethanol), (Table 3).
- Parts in contact with sample and process liquids are made chemically resistant materials.
- All stainless steel components are electropolished for improved resistance to corrosion and reduced friction and contamination.
- All polymeric materials have been tested and meet the requirements for USP class VI, described in USP <88> Biological Reactivity Tests, *In Vivo*.

Chemical resistance

Table 3 is a guide to the resistance of materials to chemical solvents. The information has been complied from published material from several sources. Please note that the effects of a solvent will be more severe at higher temperatures and that combined effects have not been taken into consideration.

IPR2023-00604 - U.S. Patent No. 11,331,598 Hugel Inc v. Medytox Inc. Hugel Ex. 1029 - Page 3

Table 3. Chemical resistance of materials of construction

Substance	Concentration	60–90 days[1]	Substance	Concentration	60–90 days[1]
Acetic acid	10%	see note 7	Hydrochloric acid	0.1 M	see note 6, 7
Acetic acid	25%	see note 7	Isopropyl alcohol	100%	see note 2
Acetonitrile	5%	see note 2	Methanol	100%	see note 2
Acetonitrile	50%	see note 3	Nitric acid	0.1 M	see note 7
Acetone	10%	OK	n-Propanol	100%	OK
Cyclohexane	100%	see note 3	Sodium chloride	2 M	see note 5
Ethanol	100%	see note 2	Sodium hydroxide	2 M	OK
Ethyl acetate	100%	see note 4	Trifluoroacetic acid	0.1%	see note 7, 8
Ethylene glycol	50%	OK	Triton™ X-100	100%	OK
Glycerol	100%	OK	Urea	8 M	OK
Hexane	100%	see note 2, 7			

1 The test does not include PVC tubing.
2 For repetitive, long-term use, use FEP O-rings instead of EPDM rubber.
3 Change to FEP O-rings, polypropylene plastic resistence is adequate.
4 Polyproylene plastic resistance is adequate.
5 Can be used under normal running conditions. Do not use NaCl in storage solutions. Please note that NaCl can cause corrosion on stainless steel in acid solutions (pH below 4.0).
6 Not longer than 4 hours.
7 Not recommended for use with PA nets.
8 Use EPDM rubber instead of FEP.

Individual testing

As evidence of good manufacturing practice, all BPG columns are individually inspected. A test certificate accompanies each column delivery.

Useful spare parts

Nets

The column is delivered with 23 µm (polypropylene) nets. For media with an average particle diameter <70 µm, change to 10 µm (polyamide) or 12 µm (polypropylene) in both adapters and end-pieces. For Sepharose™ Big Beads, use 54 µm (polypropylene) nets.

O-rings

FEP adapter and sealing O-rings if solvents not compatible with the EPDM O-rings supplied with the column.

Gaskets

If solvents are not compatible with the EPDM gasket supplied with the column, use PTFE gaskets.

Longer bed heights

Packing extensions are available for all diameters.

Isolating the column after packing

We recommend using sanitary stainless steel valves of the appropriate inner diameter to prevent contamination of the packed bed. Either the 2-way or 4-way valves with a 6 mm i.d. are suitable for BPG 100, 140 and 200 columns and with a 10 mm i.d. for BPG 300 and BPG 450 columns. For storage purposes, the 25 mm blind flange with a clamp and gasket can be used to seal off the column.

Connecting the column to your system

A clamp and gasket, 6 or 10 mm i.d., are required to connect the 25 mm sanitary flanged inlet/outlet to either valves or tubing of the same type. Preflanged tubing in 6 and 10 mm i.d. is also available from GE Healthcare.

Assembly/disassembly of column

A torque wrench with a appropriate sized socket is required and can be ordered separately.

Useful column accessories

Technical support online: The process chromatography technical support portal at www.gelifesciences/purification-techsupport provides BPG users with a range of information about spares and accessories for columns and includes packing, and testing information as well as troubleshooting guides.

Column stands: BPG 100, 140 & 200, stand kit must be ordered separately. BPG 100 has adjustable feet, wheels with brakes are available. BPG 140 & 200 stands have wheels with brakes as standard. BPG 300 and 450 are supplied with stainless steel stand with wheels and foot-operated brakes.

Air Traps: BPG Air Trap Complete includes the air trap, mounting bracket, steel valves, clamps and gaskets. For air traps for BPG 100, 140 and 200, tubing is included.

Manometers: Manometer kits contain a pressure gauge, T-junction, necessary clamps and gaskets for sanitary connections.

Pressure relief valves: Connected between the pump and column inlet permit flow delivery at a constant pressure throughout the packing procedure.

IPR2023-00604 - U.S. Patent No. 11,331,598 Hugel Inc v. Medytox Inc. Hugel Ex. 1029 - Page 4

Table 4. Recommended spare parts

Spare Parts	BPG 100	BPG 140	BPG 200	BPG 300	BPG 450	Qty/ Pack	Material
Flange O-ring	18-8494-01	18-1113-06	18-8489-01	18-1012-26	18-1105-33	2	EPDM
Flange O-ring	18-0019-41	18-1113-06	18-0019-51	18-1012-27	18-1117-67	1	FEP
Adapter O-ring	18-8475-01	18-1113-10	18-0275-01	18-1012-51	18-1017-47*	2	EPDM
Adapter O-ring	18-0019-40	18-1113-11	18-0019-50	18-1012-52	18-1117-66	1	FEP
U-shaped seal	—	—	—	—	18-1104-40	1	EPDM
U-shaped seal	—	—	—	—	18-1117-55	1	PFR
Support net, adapter	18-1103-04	18-1112-99	18-0252-56	18-1012-53	18-1104-34*	2	PP
Support net, end-piece	18-0251-55	18-1112-98	18-0252-55	18-1012-36	18-1104-35*	2	PP
Net, 10 µm, adapter	18-1103-05	18-1113-03	18-0252-76	18-1012-55	18-1017-46*	2	PA
Net, 10 µm, end-piece	18-0251-77	18-1113-02	18-0252-77	18-1012-35	18-1103-18*	2	PA
Net, 12 µm, adapter	18-1148-37	18-1148-39	18-1148-41	18-1148-43	18-1148-45*	2	PEEK
Net, 12 µm, end-piece	18-1148-38	18-1148-40	18-1148-42	18-1148-44	18-1148-46*	2	PEEK
Net, 23 µm, adapter	18-1103-08	18-1113-01	18-9253-01	18-1012-54	18-1001-62*	2	PP
Net, 23 µm, end-piece	18-9252-01	18-1113-00	18-9254-01	18-1012-34	18-1103-19*	2	PP
Net, 54 µm, adapter	18-1126-96	18-1126-98	18-1127-00	18-1127-02	18-1127-04*	2	PP
Net, 54 µm, end-piece	18-1126-97	18-1126-99	18-1127-01	18-1127-03	18-1127-05*	2	PP

* One piece per pack.

Safety valve: Pre-calibrated valve which releases pressure if the calibrated value is exceeded. Recommended if column may exceed its maximum pressure limit and no other pressure sensor is included in the chromatographic system. A T-junction, clamps and gaskets, which may be needed, must be ordered separately.

Top valve: Manually operated valve is recommended at the top of the airtrap as an air outlet control.

Grounding Kit

A grounding kit is available as an accessory for BPG columns.

Connectors

The connectors shown in Figure 4 are available as accessories from GE Healthcare.

Recommended spare parts

Table 4 lists the recommended spare parts. It is advisable to keep spares of nets, support screens, O-rings, and tubes on site at all times. O-rings and filters should be checked regularly for wear. Worn O-rings may not seal properly and over-used filter nets can affect distribution. If solvents are not compatible with EPDM seals, change to seals in FEP/PFR. Check the HETP and As regularly to prevent poor performance due to old nets. Contact your GE Healthcare representative for advice regarding change of spare parts.

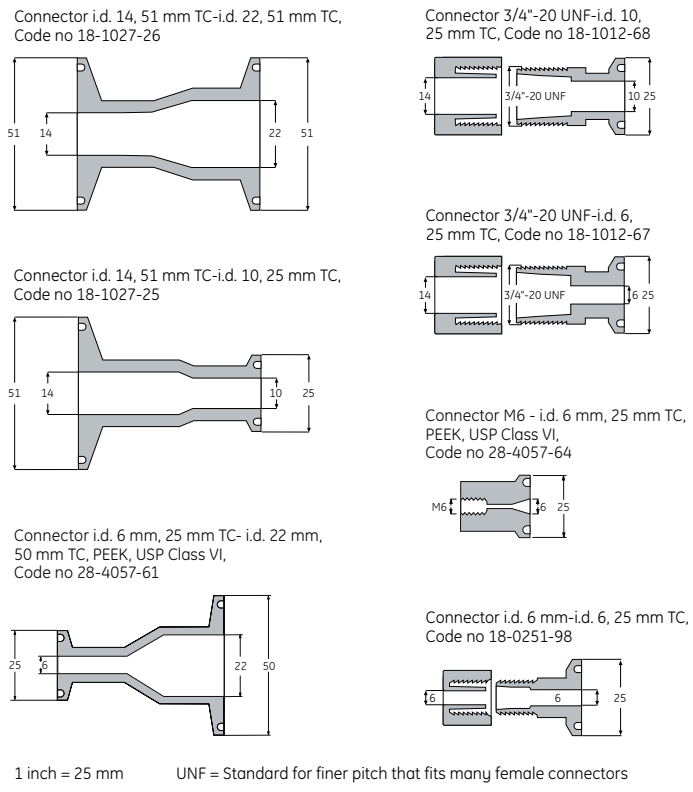

Fig 4. Guide to connectors for process scale columns.

IPR2023-00604 - U.S. Patent No. 11,331,598 Hugel Inc v. Medytox Inc. Hugel Ex. 1029 - Page 5

Table 5. Accessories for BPG 100, 140 and 200 columns

Accessory	BPG 100	BPG 140	BPG 200	Qty/ Pack	Material
Air Trap Complete[2]	18-1102-96	18-1102-97	18-1102-97	1	316/glass
Top valve[2]	18-1121-44	18-1121-44	18-1121-44	1	316/EPDM
T-junction i.d. 6 mm[4]	18-1104-29	18-1104-29	18-1104-29	1	316
Valve sealing washer[6]	18-1128-69	18-1128-69	18-1128-69	2	PTFE
Manometer kit[3] (0–10 bar)	18-1031-07	18-1031-07	18-1031-07	1	304/316/EPDM
Manometer[3] (0–10 bar)	18-1103-67	18-1103-67	18-1103-67	1	316
Castor	18-1001-09	18-1001-09	18-1001-09	1	—
Adjustable foot	18-1126-93	18-1126-93	18-1126-93	1	—
Torque wrench	18-0251-37	18-0251-37	18-0251-37		304
12-point opening socket	18-1031-03	18-1031-04	18-1031-04		304
Allen key	18-1030-98	18-1030-98	18-1030-98		304
Packing device[1]	18-1104-75	18-1113-33	18-1104-77	1	glass
Grounding kit	18-1157-87	18-1157-87	18-1157-87	1	—
Media stirrer (80 mm plate diam.)	18-1149-80	18-1149-80	18-1149-80	1	—
Tubing with sanitary fitting[2] i.d. 6 mm					
30 cm	18-0005-42	18-0005-42	18-0005-42	1	PVC
75 cm	18-0005-43	18-0005-43	18-0005-43	1	PVC
125 cm	18-0005-44	18-0005-44	18-0005-44	1	PVC
150 cm	18-0005-45	18-0005-45	18-0005-45	1	PVC
200 cm	18-0005-47	18-0005-47	18-0005-47	1	PVC
Connectors[5]					
i.d. 6, 25 mm TC-6 mm threaded	18-0251-98	18-0251-98	18-0251-98	2	PP
i.d. 6, 25 mm TC-3/4"-20 UNF threaded	18-1012-67	18-1012-67	18-1012-67	2	PP
i.d. 6, 25 mm TC-M6 threaded	18-1031-09	—	—	2	PP
i.d. 6, 25 mm TC-i.d. 22, 51 mm TC	18-1012-69	18-1012-69	18-1012-69	2	PP
Clamps, gaskets					
Clamp 25 mm	18-1001-31	18-1001-31	18-1001-31	1	304
Clamp 25 mm	44-0568-01	44-0568-01	44-0568-01	12	304
Clamp 51 mm	44-7134-01	44-7134-01	44-7134-01	1	304
Gasket 25 mm i.d. 6 mm	18-0019-27	18-0019-27	18-0019-27	2	EPDM
Gasket 25 mm i.d. 6 mm	18-0019-28	18-0019-28	18-0019-28	2	PTFE
Gasket 51 mm i.d. 22 mm	44-7133-01	44-7133-01	44-7133-01	5	EPDM
Gasket 51 mm i.d. 22 mm	44-5512-03	44-5512-03	44-5512-03	2	PTFE
Blind flange 25 mm incl. gasket	18-1001-25	18-1001-25	18-1001-25	1	304/EPDM
Blind flange 51 mm incl. gasket	44-7135-01	44-7135-01	44-7135-01	1	304/EPDM
Valves					
4port, 2way i.d. 6mm[2]	18-5757-01	18-5757-01	18-5757-01	1	316L/PTFE
4port, 4way i.d. 6mm[2]	18-5758-01	18-5758-01	18-5758-01	1	316L/PTFE
Pressure relief valve i.d. 6mm[2]	18-1105-36	18-1105-36	18-1105-36	1	316/FPM
Safety valve[3]	18-1035-80	18-1035-81	18-1035-81	1	316/PTFE

[1] The packing device consists of a 380 mm height glass tube, flanges, rods, O-rings in EPDM, nuts and screws.

[2] 25 mm TC.

[3] 51 mm TC.

[4] 2×25 mm, 1×51 mm TC.

[5] See Figure 4.

[6] Fits 6 and 10 mm, 2- and 4-way valves.

[7] For O-rings as spare parts, see Table 4.

IPR2023-00604 - U.S. Patent No. 11,331,598 Hugel Inc v. Medytox Inc. Hugel Ex. 1029 - Page 6

Table 6. Accessories for BPG 300 and 450 columns

Accessory	BPG 300	BPG 450	Quantity/ Pack	Material
Air Trap Complete[3]	18-1102-98	18-1103-00	1	304/316/ glass/EPDM
Top valve[3]	18-1121-44	18-1121-44	1	316/EPDM
Torque wrench	18-0251-37	18-0251-37	1	304
12-point opening socket	18-1031-05	18-1105-31	1	304
Allen key	18-1030-98	18-1030-98	1	304
Packing device[1,8]	18-1108-16	—	1	glass
Packing device[2,8]	—	18-1105-32	1	316
T-junction i.d. 10 mm[5]	18-1003-63	18-1003-63	1	316
Valve sealing washer[7]	18-1128-69	18-1128-69 2	PTFE	
Manometer kit[4] (0–5 bar)	18-1031-08	18-1031-08	1	304/316/EPDM
Manometer[4] (0–5 bar)	18-1103-68	18-1103-68	1	316
Wheel	18-1001-09	18-1001-09	1	—
Media stirrer (150 mm plate diameter)	18-1149-81	18-1149-81	1	—
Tubing with sanitary fitting[3] length i.d.				
30 cm 10 mm	18-1012-85	18-1012-85	1	PVC
40 cm 10 mm	18-1012-86	18-1012-86	1	PVC
75 cm 14 mm	—	18-1027-28	1	PVC
90 cm 10 mm	18-1012-62	18-1012-62	1	PVC
140 cm 10 mm	18-1012-63	18-1012-63	1	PVC
170 cm 10 mm	18-1012-64	18-1012-64	1	PVC
180 cm 14 mm	—	18-1027-29	1	PVC
200 cm 10 mm	18-1012-87	18-1012-87	1	PVC
Connectors[6]				
i.d. 10, 25 mm TC-3/4"-20 UNF threaded	18-1012-68	18-1012-68	2	PP
i.d. 10, 25 mm TC-i.d.14, 51 mm TC	18-1027-25	18-1027-25	2	PP
i.d. 14, 51 mm TC-i.d.22, 51 mm TC	—	18-1027-26	2	PP
Clamps, gaskets				
Clamp 25 mm	18-1001-31	18-1001-31	1	304
Clamp 25 mm	44-0568-01	44-0568-01	12	304
Clamp 51 mm	44-7134-01	44-7134-01	1	304
Gasket 25 mm i.d. 10 mm	18-1035-79	18-1035-7	2	EPDM
Gasket 25 mm i.d. 10 mm	18-1012-40	18-1012-40	2	PTFE
Gasket 25 mm i.d. 12 mm	—	18-0200-00	2	EPDM
Gasket 25 mm i.d. 12 mm	—	44-5506-20	2	PTFE
Blind flange 25 mm incl. gasket	18-1001-25	18-1001-25	1	304/EPDM
Gasket 51 mm i.d. 10 mm	18-1012-88	18-1012-88	5	EPDM
Gasket 51 mm i.d. 14 mm	—	18-1017-57	5	EPDM
Gasket 51 mm i.d. 22 mm	44-7133-01	44-7133-01	5	EPDM
Gasket 51 mm i.d. 22 mm	44-5512-03	44-5512-03	2	PTFE
Blind flange 51 mm incl. gasket	44-7135-01	44-7135-01	1	304/EPDM
Valves				
4port, 2way i.d. 10 mm[3]	18-1012-56	18-1012-56	1	316L/PTFE
4port, 4way i.d. 10 mm[3]	18-1012-57	18-1012-57	1	316L/PTFE
3port, 2way i.d. 15 mm[3]	—	44-5499-90	1	316L/PTFE
Pressure relief valve i.d. 10 mm[3]	18-1106-97	18-1106-97	1	316/FPM
Safety valve[4]	18-1035-82	18-1103-65	1	316/EPDM

[1] The packing device consists of a 380 mm height glass tube, flanges, rods, O-rings in EPDM, nuts and screws.

[2] The packing device consists of a 300 mm high stainless steel tube, O-rings, nuts and a clamp.

[3] 25 mm TC.

[4] 51 mm TC.

[5] 2×25 mm, 1×51 mm TC.

[6] See Figure 4.

[7] Fits 6 and 10 mm, 2- and 4-way valves. For replacement, consult "Instructions for Use".

[8] For O-rings as spare parts, see Flange O-rings for the respective column in Table 4.

IPR2023-00604 - U.S. Patent No. 11,331,598 Hugel Inc v. Medytox Inc. Hugel Ex. 1029 - Page 7

Ordering information

Diameter	Column tube length (mm) 500	750	950	Stand kit
100	18-1103-01	18-1103-02	18-1103-03	18-1031-10
140	18-1113-08		18-1113-09	18-1031-20
200	18-1103-11	18-1103-12	18-1103-13	18-1031-20
300	18-1103-21	18-1103-22	18-1103-23	
450	18-1103-71	18-1103-72	18-1103-73*	

* Tube height for BPG 450 is 1000 mm.

Literature	Code No.
Sanitizing BPG columns with sodium hydroxide	18-1020-86
Sanitizing BPG 450 column with sodium hydroxide	18-1117-76

ООО «Диаэм»
Москва
ул. Магаданская, д. 7, к. 3 ■ тел./факс: (495) 745-0508 ■ sales@dia-m.ru
www.dia-m.ru

С.-Петербург +7 (812) 372-6040 spb@dia-m.ru
Новосибирск +7(383) 328-0048 nsk@dia-m.ru
Воронеж +7 (473) 232-4412 vrn@dia-m.ru
Йошкар-Ола +7 (927) 880-3676 nba@dia-m.ru
Красноярск +7(923) 303-0152 krsk@dia-m.ru
Казань +7(843) 210-2080 kazan@dia-m.ru
Ростов-на-Дону +7 (863) 303-5500 rnd@dia-m.ru
Екатеринбург +7 (912) 658-7606 ekb@dia-m.ru
Кемерово +7 (923) 158-6753 kemerovo@dia-m.ruu
Армения +7 (094) 01-0173 armenia@dia-m.ru