IN THE UNITED STATES PATENT AND TRADEMARK OFFICE

In re Patent of:	Hayato Nakanishi	
U.S. Patent No.:	7,259,736	Attorney Docket No.: 54108-0001IP1
Issue Date:	August 21, 2007	
Appl. Serial No.:	10/712,381	
Filing Date:	November 14, 2003	
Title:	ELECTRO-OPTICAL DEVICE, ACTIVE-MATRIX SUB-STRATE, AND ELECTRONIC APPARATUS	

Mail Stop Patent Board
Patent Trial and Appeal Board
U.S. Patent and Trademark Office
P.O. Box 1450
Alexandria, VA 22313-1450

PETITION FOR *INTER PARTES* REVIEW OF UNITED STATES PATENT NO. 7,259,736 PURSUANT TO 35 U.S.C. §§ 311–319, 37 C.F.R. § 42

TABLE OF CONTENTS

I. INTRODUCTION 1

II. REQUIREMENTS FOR IPR 1

- **A.** Grounds for Standing 1
- **B.** Challenge and Relief Requested 1
- **C.** Level of Ordinary Skill in the Art 2

III. SUMMARY OF THE '736 PATENT 3

- **A.** Brief Description 3
  1. First Exemplary Embodiment 3
  2. Second Exemplary Embodiment 6
  3. Third Exemplary Embodiment 8
- **B.** Prosecution History 8
  1. United States Patent Office Proceedings 8
  2. Japanese Patent Office Proceedings 11
- **C.** Claim Construction 19

IV. THE CHALLENGED CLAIMS ARE UNPATENTABLE 20

- **A.** Ground 1A: Claims 3-5, 13, and 16-17 are anticipated by, and obvious over, Masuda 20
  1. Overview of Masuda 20
  2. Claim 3 25
  3. Claim 4 42
  4. Claim 5 43
  5. Claim 13 43
  6. Claim 16 43
  7. Claim 17 44
- **B.** Ground 1B: Claims 3-5, 7, 9, and 13-17 are obvious over Inoue in view of Masuda 45
  1. Overview of Inoue 45
  2. The Inoue-Masuda Combination 46
  3. Motivations to Combine Inoue and Masuda 48
  4. Claim 3 55
  5. Claim 4 66
  6. Claim 5 66

7. Claim 7 66
8. Claim 9 70
9. Claim 13 73
10. Claim 14 73
11. Claim 15 73
12. Claim 16 74
13. Claim 17 74

V. DISCRETIONARY CONSIDERATIONS 75

VI. FEES 78

VII. MANDATORY NOTICES UNDER 37 C.F.R § 42.8(a)(1).....78

A. Real Party-In-Interest Under 37 C.F.R. § 42.8(b)(1).....78
B. Related Matters Under 37 C.F.R. § 42.8(b)(2).....78
C. Lead And Back-Up Counsel Under 37 C.F.R. § 42.8(b)(3).....78
D. Service Information 79

EXHIBITS

EX-1001	U.S. Patent No. 7,259,736 to Hayato Nakanishi ("the '736 patent")
EX-1002	Excerpts from the Prosecution History of the '736 Patent ("the Prosecution History")
EX-1003	Declaration of Dr. David K. Liu
EX-1004	U.S. Patent No. 5,831,699 ("Wright")
EX-1005	Prosecution History of JP2002-348622 ("the Foreign Counterpart Prosecution History")
EX-1006	Certified Translation of Pages 1-10, 50-58 from the Foreign Counterpart Prosecution History
EX-1007	Certified Translation of Pages 63-79 from the Foreign Counterpart Prosecution History
EX-1008	JPH11185654A to Yukio Masuda et al ("Masuda")
EX-1009	Certified Translation of Masuda
EX-1010	JP2002-278504A to Mitsuo Inoue et al ("Inoue")
EX-1011	Certified Translation of Inoue
EX-1012	KR960012168A to Yang-Ho Kwon ("Kwon")
EX-1013	Certified Translation of Kwon
EX-1014	Sarma et al., "Flat Panel Displays for Portable Systems," 13 *Journal of VLSI Signal Processing Systems* 165-190 (1996)

EX-1015	Complaint, *Element Capital Commercial Company PTE. Ltd. v. BOE Technology Group Co., Ltd. et al.*, Case No. 2:22-cv-0118-JRG (EDTEX)
EX-1016	Docket Control Order, *Element Capital Commercial Company PTE. Ltd. v. BOE Technology Group Co., Ltd. et al.*, Case No. 2:22-cv-0118-JRG (EDTEX)

I. INTRODUCTION

BOE Technology Group Co., Ltd., Beijing BOE Display Technology Co., Ltd., and Motorola (Wuhan) Mobility Technologies Communication Co., Ltd. ("Petitioner") petition for *Inter Partes* Review ("IPR") of claims 3-5, 7, 9, and 13-17 ("Challenged Claims") of U.S. Patent No. 7,259,736 ("the '736 patent").

II. REQUIREMENTS FOR IPR

A. Grounds for Standing

Petitioner certifies that the '736 Patent is available for IPR. The present petition is being filed within one year of service of a complaint against Petitioner. Petitioner is not barred or estopped from requesting this review.

B. Challenge and Relief Requested

Petitioner requests IPR on the grounds set forth below. The Declaration of Dr. David K. Liu provides additional explanation and support. *See* EX-1003.

Ground	Claims	Basis for Rejection
1A	3-5, 13, 16-17	Anticipated by, and Obvious over JPH11185654A ("Masuda")
1B	3-5, 7, 9, 13-17	Obvious over Masuda in view of JP2002-278504A ("Inoue")

These references qualify as prior art based on the earliest claimed priority date, 11/29/2002, as shown below. Petitioner does not concede that the '736 patent is entitled to the claimed priority.

Notably, none of the references was considered during prosecution before the United States Patent Office. *See generally* EX-1001 at (56); EX-1002.

Reference	Date	Statutory Ground[1]
JPH11185654A ("Masuda")	7/9/1999 (publication)	§102(b)
JP2002-278504 ("Inoue")	9/27/2002 (publication)	§102(a)

C. Level of Ordinary Skill in the Art

For purposes of IPR, a person of ordinary skill in the art at the time of alleged invention ("POSITA") would have had at least a Master's degree in electrical engineering, physics, or a related field, and at least two years of relevant work experience in the field of integrated circuit design and manufacturing. EX-1003 at ¶¶ 26-27. Additional education can remedy lack of work experience and vice versa. *Id.*

[1] Because the '736 patent was filed on November 14, 2003, it is treated as a "pre-AIA" patent. Thus, all citations to 35 U.S.C. § 102 in this petition will refer to the pre-AIA version of § 102.

III. SUMMARY OF THE '736 PATENT

A. Brief Description

The '736 patent relates to an "electro-optical device." EX-1001 at Abstract. It discloses, as background, that "an active matrix drive system" can drive various types of displays, including those having "liquid-crystal elements, organic EL (electroluminescent) elements, electrophoresis elements, electron emitting elements, or the like." *Id.* at 1:10-14. This system features a "display panel," a "plurality of pixels in a matrix," and "pixel circuits . . . for supplying drive power to the electro-optical elements." *Id.* at 1:14-19.

The patent alleges that, when an active matrix drive system's "pixel circuits have different shapes and/or different pitches" in the column and row directions, "directional viewing variation occurs," impairing "display quality." *Id.* at 1:23-34. The '736 patent discloses three exemplary embodiments that purport to solve that and other display-related problems. *See* EX-1003 at ¶¶ 56-61.

1. First Exemplary Embodiment

The '736 patent's first exemplary embodiment generally relates to a pattern of display pixels. *See* EX-1001 at 7:6-13:20. The pattern features green ("ZG"),

blue ("ZB"), and red ("ZR") "pixel forming regions," and a "dummy forming region" ("ZS") laid out in a square lattice. *See id.* at 7:58-62.[2] Each pixel forming region features a "pixel circuit"[3] (20G, 20B, and 20R for green, blue, and red, respectively) to drive an "organic EL (electroluminescent) element"[4] (21G, 21B, and 21R). *See id.* at 7:44-48. The dummy region, in contrast, lacks pixel circuits or organic EL elements and instead features an "anti-reflection member." *Id.* at 8:1-4, Fig. 3. The patent states that "[t]hus, black is displayed in the dummy forming region" instead of a color, which enhances "the contrast ratio of the display." *Id.* at 8:4-8; EX-1003 at ¶¶ 56-61.

Figure 2 is annotated below to identify pixel-forming regions (in pale green,

---

[2] As a convention throughout this petition, the color yellow will generally be used to depict the "dummy" or "ineffective optical" region.

[3] The patent later clarifies that "the pixel circuits 20 and 30 . . . may [] be embodied as electronic circuits to drive electro-optical elements, for example, light-emitting elements, such as LED or FED, other than the organic elements 21G, 21B, and 21R." EX-1001 at 16:42-47.

[4] The patent later clarifies that "the electro-optical elements may be applied to an inorganic EL display having inorganic EL elements." EX-1001 at 16:48-53.

blue, and red shading) and dummy regions (yellow shading), and figure 3 is annotated to identify exemplary pixel-forming regions (pale green, blue, and red shading), pixel circuits (dark green, blue, and red outlines), organic EL elements (bright green, blue, and red shading), and a dummy region (yellow shading), which lacks pixel circuits or elements. *See* EX-1003 at ¶¶ 56-61.

'736 Patent at Fig. 2 (Circuit Block Schematic) [5]	**'736 Patent at Fig. 3 (Pixel Circuit Schematic)**
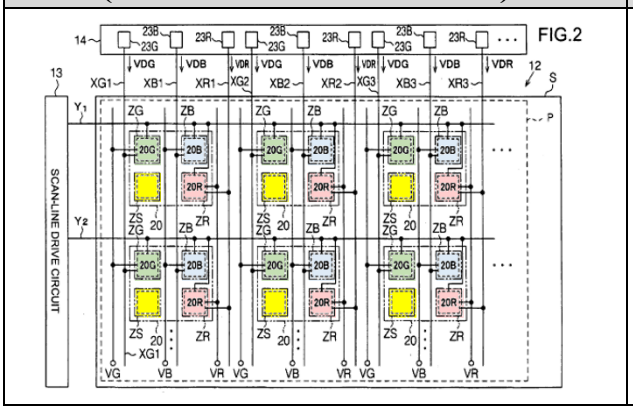	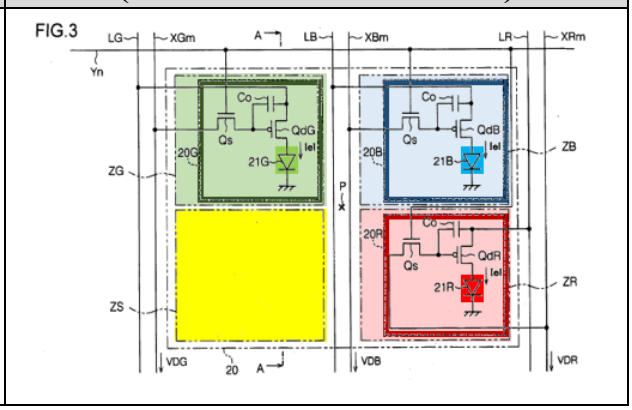

The '736 patent alleges this pattern provides various advantages. First, by

[5] This petition uses the '736 patent's original November 14, 2003 filing's figures rather than the '736 patent's figures. EX-1002 at 31-37. The '736 patent apparently issued with the wrong figures, which pertain to unrelated U.S. application no. 10/**721**,381 and not the '736 patent (U.S. application no. 10/**712**,381). Petitioner may challenge the validity of the patent on other grounds in district court based on this defect.

having "two adjacent same-color organic EL elements . . . arranged at regular intervals with one forming region interposed therebetween, it is possible to reduce directional viewing variation that occurs between the column direction and the row direction of the display panel portion 12." EX-1001 at 12:61-67. Second, the dummy forming region's "anti-reflection member" results in "a display having a high contrast ratio." *Id.* at 13:1-6. Third, having the "same shape" for the pixel and dummy forming regions reduces "coating spots that result from the formation of the organic EL elements." *Id.* at 13:7-14; *see also* EX-1003 at ¶¶ 56-61.

2. Second Exemplary Embodiment

The '736 patent's second exemplary embodiment "is analogous to the first exemplary embodiment except that the formation positions of the pixel circuits 20G, 20B, and 20R in the first exemplary embodiment are different." *See* EX-1001 at 13:24-15:28. Comparing figure 3 (corresponding to the first embodiment) with figure 5 (corresponding to the second embodiment) illustrates this difference. Specifically, green pixel circuit 20G and red pixel circuit 20R are moved to dummy region ZS (*id.* at 13:42-46, 13:58-63) and blue pixel circuit 20B is moved to red pixel region ZR (*id.* at 13:47-57). The organic EL elements 21G, 21B, and 21R, on the other hand, remain in their original locations. *See id.* at 13:41-57. Figures 3 and 5 are annotated below to identify exemplary instances of pixel circuits (dark green, blue, and red outlines), elements (bright green, blue, and red shading),

pixel regions (pale green, blue, and red shading), and a dummy region (yellow shading).

'736 Patent at Fig. 3 (Pixel Circuit Schematic from First Embodiment)	**'736 Patent at Fig. 5 (Pixel Circuit Schematic from Second Embodiment)**
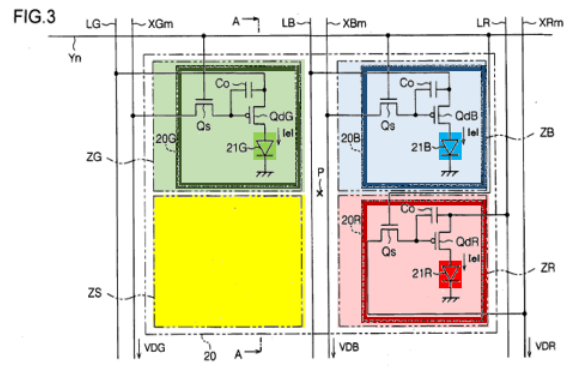	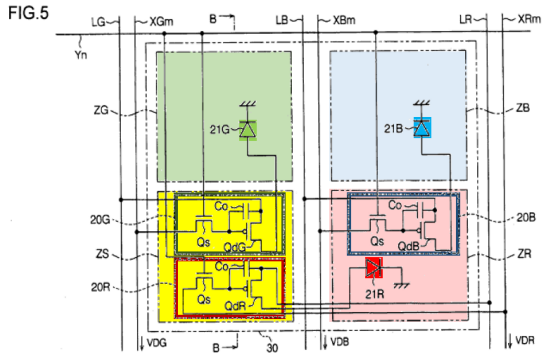

Altering the pixel circuit's "formation positions" in this manner allegedly allows the "aperture ratios in the green pixel forming region ZG and the blue pixel forming region ZB" to be increased. EX-1001 at 13:52-53. "As a result, a display having reduced power consumption can be provided." *Id.* at 15:18-23. The "formation of the pixel [circuits[6]], which control the green and red organic EL elements 21G and 21R, in the dummy forming region ZS can reduce the area of the pixel circuit 30." *Id.* at 15:24-28; *see also* EX-1003 at ¶ 62.

[6] The patent's reference to "pixel elements" rather than "pixel circuits" in this section appears to be a typo. *See* EX-1001 at 13:42-45, 13:58-63; EX-1003 at ¶ 62.

3. Third Exemplary Embodiment

The ’736 patent’s third and final exemplary embodiment generally relates to an “electronic apparatus . . . which serves as an electro-optical device” and embodies the display described in the first or second exemplary embodiments. *See* EX-1001 at 15:30-59. Such an apparatus can be, for example, a “mobile personal computer” or a “portable telephone.” *See id.* at 15:39-60, Fig. 7, Fig. 8; *see also* EX-1003 at ¶ 63.

’736 Patent at Fig. 7 (Mobile Personal Computer)	**’736 Patent at Fig. 8 (Portable Telephone)**
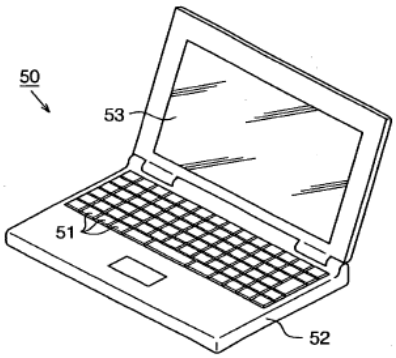	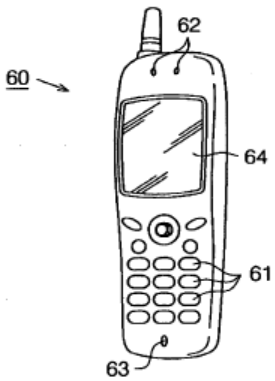

B. Prosecution History

1. United States Patent Office Proceedings

The ’736 patent was filed on November 14, 2003, claiming priority to a Japanese application no. 2002-348622 filed November 29, 2002. EX-1002 at 1.

The first office action issued June 25, 2006, and it included a restriction requirement. *Id.* at 228-231. In response, the Applicant provisionally elected “Spe-

cies 1" with traverse and characterized the elected species as corresponding to figures 1-4, 7, and 8 and claims 1-7, 11-20, 23-29, 32, and 33. *Id.* at 232-233.

The next office action issued September 12, 2006. *Id.* at 241-250. Despite the Applicant's request for examination of all species (on the basis of M.P.E.P. § 803), the Examiner maintained the restriction requirement, examined only the elected claims, and deemed claims 8-10, 22, 22, 30, and 31 withdrawn from examination. *Id.* at 242-243. This office action also rejected all elected claims based on Wright (U.S. Patent No. 5,831,699) and other references. *Id.* at 245-249; EX-1004. The Examiner asserted that elements 34-37 in figure 1 of Wright disclosed the claimed "ineffective optical regions" (annotated in yellow) that were "sandwiched" by "first effective optical regions (24, 27)" and "second effective optical regions (25, 26)" (all annotated in red) as recited by claims 1-3. EX-1002 at 245-246.

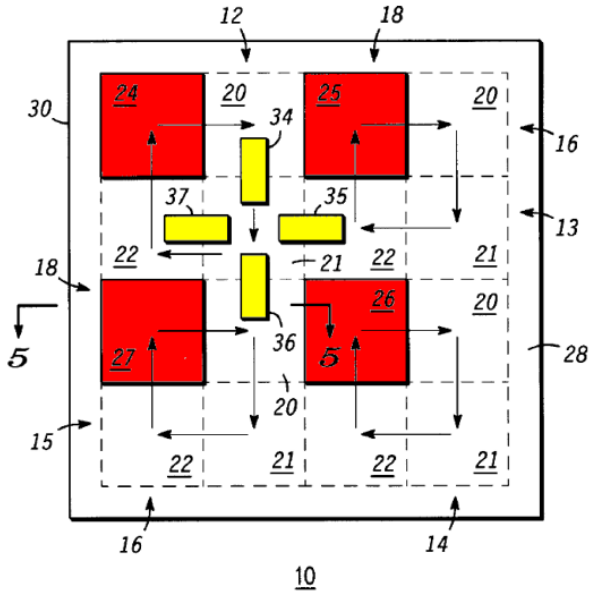

FIG. 1

EX-1004 at Fig. 1; *see also* EX-1003 at ¶¶ 64-65.

In an interview held December 16, 2006 the Examiner agreed that if "the limitation of 'the ineffective optical region' changed to -- the *whole* ineffective optical region -- in claim 2, the claim 2 rejection will be withdrawn." EX-1002 at 256 (emphasis added).

The Applicant amended the claims on January 17, 2007, cancelling claim 2 and moving its limitations to claim 1, which resulted in all independent claims reciting either that:

- the "*whole*" "ineffective optical regions" (claim 3) or "non-luminous regions" (claim 16) or "non-element-forming regions" (claim 27) are sandwiched
- "ineffective optical regions" (claim 1) or "non-element forming regions"

(claim 26) are "*provided in a square lattice*" as well as sandwiched. *Id.* at 257-268. The Applicant noted that the Examiner apparently agreed that amending claims 3, 16, and 27 to recite that "each of the whole [ineffective optical/non-luminous/non-element-forming] regions" were sandwiched would overcome the § 102 rejection, which was based on Wright. *Id.* at 267. The Applicant further argued that Wright does not disclose "ineffective optical regions are arranged on the (square) lattice so as to be sandwiched . . ." *Id.* at 267-268. The Applicant also requested rejoinder of the withdrawn claims. *Id.* at 268.

A notice of allowance issued April 9, 2007, and allowed claims 1 and 3-38, renumbered[7] as 1-37. *Id.* at 275-280. The notice stated that none of the cited references "teaches the whole ineffective optical regions being arranged so as to be sandwiched by two of the first effective optical regions and so as to be sandwiched by two of the second effective optical regions." *Id.* at 279.

The '736 patent issued on August 21, 2007. *Id.* at 294.

2. Japanese Patent Office Proceedings

Though the '736 patent's priority Japanese application—JP2002-348622—

[7] Original claim 32, once allowed, became final claim 2. EX-1002 at 286. Thus, original claim 3, after amendment and allowance, became final claim 3. *Id.*

was filed roughly a year earlier than the '736 patent's U.S. application, its prosecution lagged behind the U.S. application. As a result, the Japan Patent Office ("JPO") uncovered prior art that was never considered by the USPTO, which it used to reject claims substantially similar to those that had already issued in the United States. *See* EX-1002 at 294 (August 21, 2007, issuance); EX-1007 at 1-2 (September 5, 2007 first office action); EX-1003 at ¶¶ 66-68.

Around January 29, 2007, while the U.S. application was still pending, the JPO issued a search report that identified three prior art references, including JP11-185654 ("Masuda"). EX-1007 at 12-14; EX-1009. Masuda published on July 9, 1999, and thus qualifies as prior art not only to the Japanese application, but also to the U.S. application under pre-AIA 35 U.S.C. § 102(b). EX-1009. Masuda was not made available to the USPTO Examiner or considered during prosecution of the U.S. application. EX-1001 at References Cited (lacking any mention of references to "Masuda"); EX-1002.

Around September 5, 2007, the JPO rejected claims that were essentially identical to claims that the USPTO allowed only a couple weeks before. EX-1007 at 1-2. First, the JPO found that Masuda described the alleged inventions in at least Japanese application claims 3-5, 7, 11, 13, and 17. *Id.* at 1 (citing those claims, Reason 1, and Document 1, which is defined in the "Cited References"

portion as Masuda).[8] As shown by the table below, these rejected Japanese claims correspond to challenged claims 3-5, 7, 9, 13, and 16 of the '736 patent. EX-1006 at 5-11. The first entry has been highlighted to identify limitations from Japanese claim 3 and U.S. claim 3 that are substantially the same:

Claims Anticipated by Masuda According to the JPO	Issued Claims of the '736 Patent Challenged in this Petition
3. An electro-optical device, comprising:	3. An electro-optical device comprising: a substrate;
a plurality of first effective optical regions provided with a first electro-optical element;	a plurality of first effective optical regions provided above the substrate, first electro-optical elements being provided in the first effective optical regions;
a plurality of second effective optical regions provided with a second electro-optical element; and	a plurality of second effective optical regions provided above the substrate, second electro-optical elements being provided in the second effective optical regions; and
a plurality of non-effective optical regions in which electro-optical elements are not provided; wherein	a plurality of ineffective optical regions provided above the substrate, no electro-optical elements being provided in the ineffective optical regions,
each of the plurality of non-effective optical regions is interposed between two first effective optical regions of the	each of the whole ineffective optical regions being arranged so as to be sandwiched by two of the first effective

[8] The JPO further noted that these claims "could have been arrived at easily by [a] person skilled in the art based on [Masuda]." EX-1007 at 1 (citing Reason 2).

plurality of first effective optical regions and simultaneously interposed between two second effective optical regions of the plurality of second effective optical regions.	optical regions and so as to be sandwiched by two of the second effective optical regions.
4. The electro-optical device according to claim 2 or claim 3, wherein the first effective optical regions or the second effective optical regions are not arranged to be mutually adjacent.	4. The electro-optical device according to claim 3, wherein the first effective optical regions are not adjacent to each other.
5. The electro-optical device according to any one of claims 2 to 4, wherein the first effective optical region and the second effective optical region have the same shape.	5. The electro-optical device according to claim 3, the first effective optical regions and the second effective optical regions having the same shape.
7. The electro-optical device according to any one of claims 2 to 6, wherein both the plurality of first effective optical regions and the plurality of second effective optical regions have an electronic circuit for driving the electro-optical elements formed in the first effective optical region and the second effective optical region.	7. The electro-optical device according to claim 3, the first and second effective optical regions having respective electronic circuits to drive the electro-optical elements provided in the first and second effective optical regions.
11. The electro-optical device according to any one of claims 7 to 10, wherein each pixel is arranged and formed corresponding to an intersection of a plurality of scanning lines and a plurality of data lines; and the electronic circuit drives the electro-optical elements based on a scanning signal from the scanning lines and a data signal from the data lines.	9. An electro-optical device according to claim 7, further comprising: pixels provided so as to correspond to respective intersections of a plurality of scan lines and a plurality of data lines, the electronic circuits driving the electro-optical elements in accordance with scan signals from the scan lines and data signals from the data lines.
13. The electro-optical device according to any one of claims 2 to 12, wherein the first electro-optical element and the second electro-optical element are two electro-optical elements selected from electro-optical elements	13. The electro-optical device according to claim 3, the first electro-optical element and the second electro-optical element including two electro-optical elements selected from an electro-opti-

that emit green light, blue light, and red light, respectively.	cal element that emits green, an electro-optical element that emits blue, and an electro-optical element that emits red.
17. The electro-optical device according to claim 16, wherein the first light-emitting films or the second light-emitting films are provided so as to be mutually adjacent.	16. The electro-optical device according to claim 3, wherein the second effective optical regions are not arranged so as to be adjacent to each other.

Second, the JPO found that claims 14 and 15 "could have been easily invented by a person with ordinary knowledge . . . based on" Masuda and JP2002-278504 ("Inoue"). EX-1007 at 2-3 (citing those claims, Reason 2, and Cited References 1 and 2). Inoue published on September 27, 2002, and thus qualifies as prior art not only to the Japanese application, but also to the U.S. application under 35 U.S.C. § 102(a). *See* EX-1011. Again, Inoue was not made available to the USPTO Examiner or considered during prosecution of the U.S. application. EX-1001 at References Cited (lacking any mention of references to "Inoue"); EX-1002. As shown by the table below, rejected claims 14 and 15 of the Japanese application correspond to challenged claims 14 and 15 of the '736 patent. EX-1006 at 7-8.

Claims Rendered Obvious by Masuda and Inoue According to the JPO	**Issued Claims of the '736 Patent Challenged in this Petition**
14. The electro-optical device according to any one of claims 2 to 13, wherein each of the first electro-optical elements and the second electro-optical	14. The electro-optical device according to claim 3, each of the first electro-optical elements and the second elec-

elements is an EL element.	tro-optical elements being an electroluminescent element.
15. The electro-optical device according to claim 14, wherein a light-emitting layer of the EL element is composed of an organic material.	15. The electro-optical device according to claim 14, the electroluminescent element having a light-emitting layer that includes organic material.

The Japanese application did not have any claims corresponding to claim 17 of the ’736 patent. EX-1006 at 1-11.

Issued Claims of the ’736 Patent Challenged in this Petition
17. The electro-optical device according to claim 3, each of the first effective optical regions in which the first electro-optical elements are provided being arranged at regular intervals in a column and row directions of a display area.

In the Japanese prosecution, the Applicant did not dispute that Masuda anticipated claims 3-5, 7, 11, 13, and 17 of the Japanese application or that Masuda and Inoue rendered obvious claims 14 and 15 of the Japanese application. EX-1007 at 7-9. Applicant instead amended the rejected claims of the Japanese application to incorporate subject matter of “Claims for Which No Reason for Rejection Has Been Discovered.” *Id.* at 2-5. Specifically, the Applicant amended claim 3 to incorporate the subject matter of claims 8 and 9, forming new claims 1 and 2. *Id.* at 3-4, 7 (mapping new claim numbers to pre-amendment claim numbers). The Applicant argued that Masuda did not disclose “the arrangement of electronic circuits, for driving the electro-optical elements, with respect to the effective optical regions and non-effective optical regions,” which it characterized as “a distinctive feature

of the invention" after amending the claims to require the electronic circuit for driving an electro-optical element to be provided on a different effective optical region or a non-effective optical region. *Id.* at 8.

The claims rejected by the JPO generally reflected the '736 patent's "first exemplary embodiment" of a pattern using colored "pixel forming regions" that sandwich a "dummy region." *See supra* Section III.A.1. The claims for which the JPO identified no prior art disclosures, in contrast, reflect the '736 patent's "second exemplary embodiment" of altering pixel circuit formation positions such that the pixel circuit for a given color could be moved to a different region. *See supra* Section III.A.2; EX-1007 at 2 (finding "no reasons for refusal" for claims 8, 9, 21, 22, 30, and 31). The table below presents the claims of the Japanese application after the amendment compared to the corresponding issued claims of the '736 patent, which lack the amendment made in the Japanese application to overcome Masuda and Inoue.

Japanese Application Claims After Amendment	**Issued Claim 3 of the '736 Patent That Lack the Feature for which "No Reasons for Refusal" Were Identified**
[Claim 1] An electro-optical device wherein: a plurality of first effective optical regions provided with a first electro-optical element, a plurality of second effective optical regions provided with a second electro-optical element, and a plurality of non-effective optical regions wherein no electro-optical element is provided are	3. An electro-optical device comprising: a substrate; a plurality of first effective optical regions provided above the substrate, first electro-optical elements being provided in the first effective optical regions; a plurality of second effective optical regions provided above the substrate, second electro-optical elements being provided in the second effective optical

disposed on a substrate, wherein: each of the plurality of non-effective optical regions is arranged interposed between two of the plurality of first effective optical regions and also arranged interposed between two of the second effective optical regions; and of the pluralities of first effective optical regions and second effective optical regions, in at least one first effective optical region and second effective optical region, an electronic circuit is formed for driving an aforementioned electro-optical element that is formed in the other first effective optical region and second effective optical region.	regions; and a plurality of ineffective optical regions provided above the substrate, no electro-optical elements being provided in the ineffective optical regions, each of the whole ineffective optical regions being arranged so as to be sandwiched by two of the first effective optical regions and so as to be sandwiched by two of the second effective optical regions.
[Claim 2] An electro-optical device wherein: a plurality of first effective optical regions provided with a first electro-optical element, plurality of second effective optical regions provided with a second electro-optical element, and a plurality of non-effective optical regions wherein no electro-optical element is provided are disposed on a substrate, wherein: each of the plurality of non-effective optical regions is arranged interposed between two of the plurality of first effective optical regions and also arranged interposed between two of the second effective optical regions; and in an aforementioned non-effective optical region, an electronic circuit is formed for driving an aforementioned electro-optical element that is	

formed in at least one of the first effective optical regions and the second effective optical regions.	

Notably, the Applicant's November 8, 2007 response in the Japanese application acknowledged that "an invention that is achieved through combining the driving method disclosed in [Inoue] with the layout of display elements described in [Masuda] would be no more than an invention wherein a basic layout of two rows and two columns is formed through three primary color display elements and one element that does not contribute to an image display, in an organic EL display device of an active matrix display system." EX-1007 at 8.

C. Claim Construction

Based on the prior art's description of the claimed elements being similar to that of the '736 patent specification, no formal claim constructions are necessary in this proceeding because "claim terms need only be construed to the extent necessary to resolve the controversy." *Wellman, Inc. v. Eastman Chem. Co.*, 642 F.3d 1355, 1361 (Fed. Cir. 2011).[9]

[9] Petitioner does not concede that each claim satisfies all statutory requirements, such as §§101 and 112, or waive any arguments concerning claim scope or

IV. THE CHALLENGED CLAIMS ARE UNPATENTABLE

A. Ground 1A: Claims 3-5, 13, and 16-17 are anticipated by, and obvious over, Masuda

1. Overview of Masuda[10]

JPH11185654A ("Masuda") is a Japanese patent application that published on July 9, 1999, and thus qualifies as prior art under pre-AIA 102(b). EX-1008; EX-1009. Masuda relates to "a display panel for producing a color display using primary color display elements that are arranged in a matrix, and to an image displaying device equipped with said display panel." EX-1009 at [0001].

Masuda teaches that rearranging a pixel's colors in a display can improve image quality. *See id.* at [0017]-[0022]; EX-1003 at ¶¶ 69-74. It noted that conventional displays featured pixels "lined up in the horizontal direction to form a single pixel" or in a "stripe arrangement." EX-1009 at [0017]. This arrangement allegedly suffers from reduced "resolution in the horizontal direction." *Id.* A

---

grounds that can only be raised in district court. For this petition, Petitioner applies prior art in a manner consistent with Patent Owner's allegations of infringement before the district court.

[10] General descriptions provided for the references and combinations thereof are incorporated into each subsection and mapping of the claims that includes citations to these references.

"checkerboard arrangement" improves resolution compared to the stripe arrangement, but it "cannot produce [its] maximum performance, because the green outputs [which in the example below are included in each column and each row whereas the blue and red outputs are included in every *other* row and every *other* column] are each limited to half in order to . . . achieve a color balance." *Id.* at [0019]-[0020].

Masuda's invention improves upon the checkerboard arrangement by adding "***one element that does not contribute to the image display***" to reduce "the difference in luminosity between columns or difference in luminosity between rows" that would otherwise appear in the checkerboard arrangement. *Id.* at [0021]-[0022]. Figures 3(a), 3(b), and 5—annotated below to show red, blue, green, and "non-display elements" (marked by "X" and highlighted with yellow)—depict the pixel arrangements disclosed by Masuda:

Masuda at Figure 3(a) (conventional "stripe arrangement")	**Masuda at Figure 3(b) (conventional "checkerboard arrangement")**	**Masuda at Figure 5 (improved arrangement with "non-display elements")**
(a)	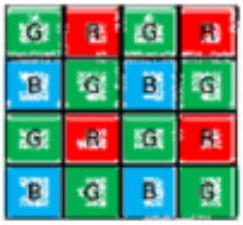 (b)	

Masuda's checkerboard pattern including a "non-display" element was

known generally in the art of pixel-based displays. EX-1003 at ¶¶ 72-75. For example, KR960012168A to Kwon discloses a "plasma display device" featuring red, blue, green and "black" pixels (indicated by the letters R, B, G, and L, respectively, in Kwon's highlighted figure 4 reproduced below:

도면4

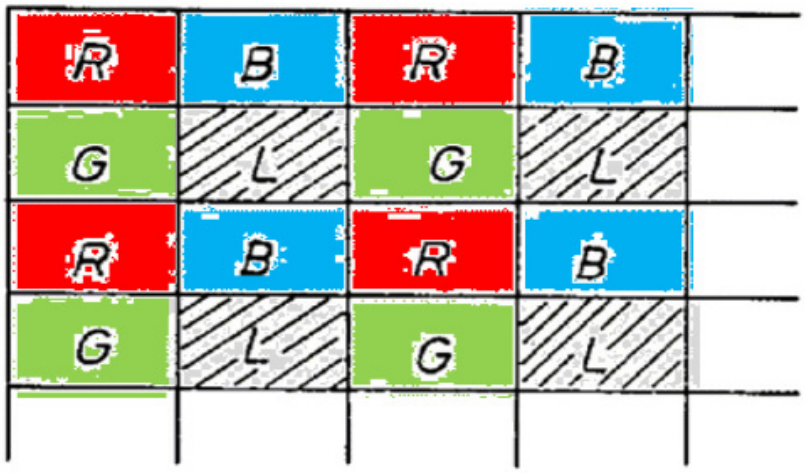

EX-1013 at Fig. 4; *see also id.* at Abstract.

Masuda describes its invention as applicable at least to displays based on "cold cathode" "electron emitting elements." *See generally* EX-1009 at [0002]-[0016]. Such elements include both "field emission-type elements," also known as "FE-type," and "metal/insulating layer/metal-type" elements, also known as "MIM-type." *Id.* at [0002]. These elements generate electrons that strike "fluorescent materials" to emit light. *See id.* at [0015]; EX-1003 at ¶¶ 49, 73. Figures 19 and 20 of Masuda, reproduced below, depict an FE-type electron emitting element

and a MIM-type electron emitting element, respectively:

Masuda at Figure 19 (FE-Type Element)	**Masuda at Figure 20 (MIM-Type Element)**
[FIG. 19] 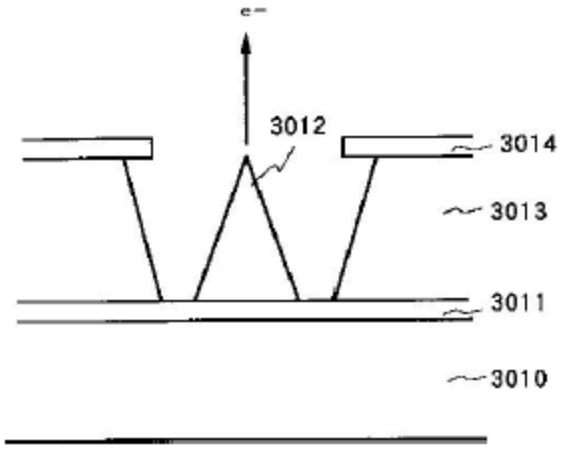	[FIG. 20] 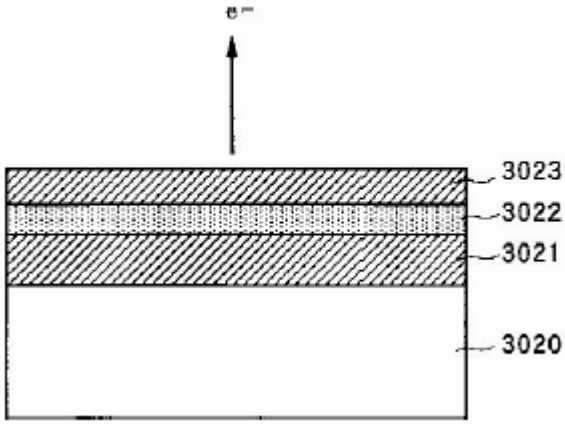

Figure 4 of Masuda, reproduced below, uses a "partial cutaway . . . to show the internal structure" of this display. EX-1009 at [0032]. It features a rear plate (1005), sidewall (1006), and a faceplate (1007), which form an "airtight container for preserving a vacuum." *Id.* at [0033]. Within that airtight container lies a substrate (1001) upon which are formed "N x M surface conduction-type emitting elements" (1002), which correlate to the "number of pixels that are to be displayed." *Id.* at [0034]. M row lines (1003) and N column lines (1004) connect these elements "in a simple matrix." *Id.* A fluorescent film (1008) "is formed on the bottom surface of the faceplate" and coated with "fluorescent materials of the three primary colors of red (R), green (G), and blue (B)." *Id.* at [0036].

【図4】

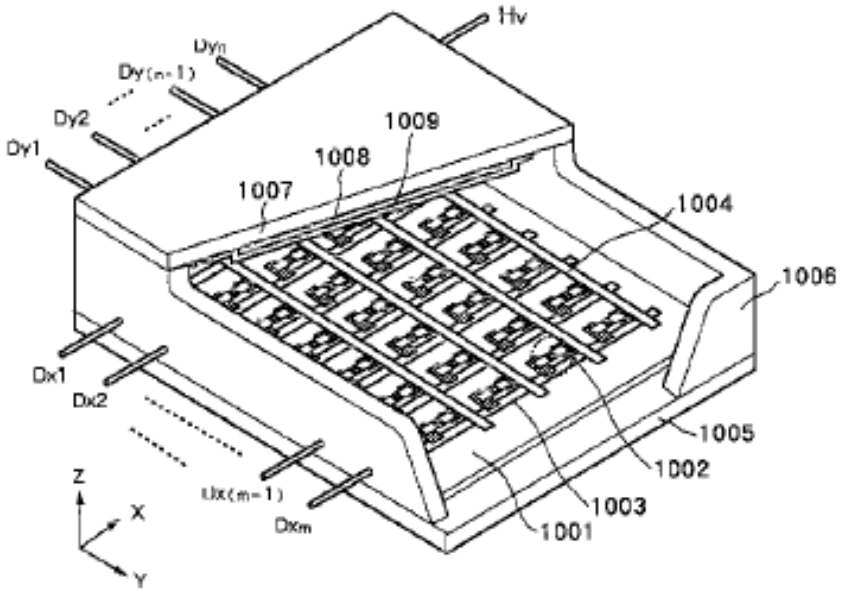

EX-1009 at Fig. 4.

Figure 6, reproduced below, provides a "plan view (a) and a cross-sectional drawing (b)" of the "emitting elements" used by Masuda's display, such as FE-type elements. *See id.* at [0045], [0118]. In these figures, "1101 is a substrate, 1102 and 1103 are element electrodes, 1104 is a conductive thin film, 1105 is an electron emitting portion formed through an electrical forming process, and 1113 is a thin film formed through an electrical activating process." *Id.* at [0045].

Masuda at Fig. 6(b) (Emitting Element Plan View)	Masuda at Fig. 6(b) (Emitting Element Cross Section)
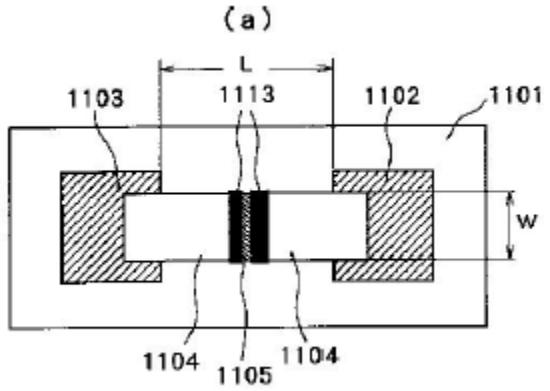	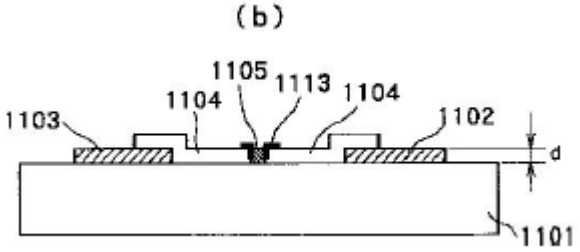

2. Claim 3

(a) 3[a] "An electro-optical device comprising:"

Masuda discloses an "Image Displaying Device Having [a] Display Panel," which is an "electro-optical device." *See* EX-1009 at Title; *see also id.* at [0001] ("The present invention relates to a display panel for producing a color display using primary color display elements that are arranged in a matrix."), [0021], [0101].

In the context of the '736 patent, an "electro-optical device" refers to an apparatus incorporating a display, such as "mobile personal computers, portable telephones, and digital cameras." EX-1001 at 15:32-38; *see also id.* at 15:39-48, Fig. 7 (discussing a mobile personal computer as an electro-optical device); *id.* at 15:50-60, Fig 8 (discussing a portable telephone as an electro-optical device).

Masuda discloses an apparatus (e.g., "image displaying device") incorporating a display (e.g., "display panel). *See* EX-1009 at Title; *see also id.* at [0001],

[0021], [0101]. It further teaches that the displaying device can be a "television." *Id.* at [0034].

Figure 4, for example, depicts an "image displaying device" which is an "electro-optical device":

[FIG. 4]

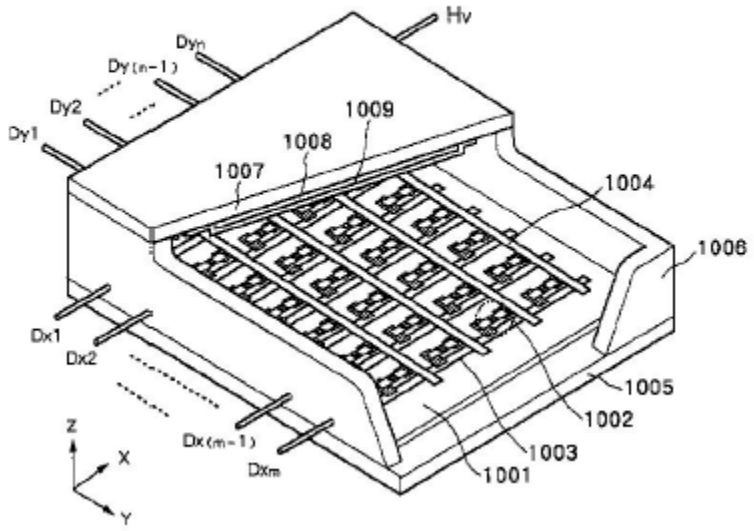

See also id. at [0032].

During prosecution of the Japanese counterpart patent, the Applicant acknowledged that "Document 1 [i.e., Masuda] describes an image displaying device." EX-1007 at 7. Applicant did not argue that Masuda does not disclose an "electro-optical display." *Id.*

For these reasons, Masuda discloses and renders obvious an electro-optical device. EX-1003 at ¶ 85.

(b) 3[b] "a substrate"

Masuda discloses a "substrate 1001," which is a "substrate" as claimed by the '736 patent. *See* EX-1009 at [0034].

Masuda describes that a "specific example will be presented to explain the structure and manufacturing method for a display panel used in the image displaying device wherein the present invention is applied." EX-1009 at [0031]. That structure includes a "substrate 1001," which is "secured to the rear plate 1005 of the airtight container." *Id.*at [0034]-[0035]. Masuda's figure 4 shows a "perspective diagram of a display panel used in the present invention, showing a partial cutaway structure for a panel in order to show the internal structure" and is annotated below to identify the substrate 1001 in blue:

[FIG. 4]

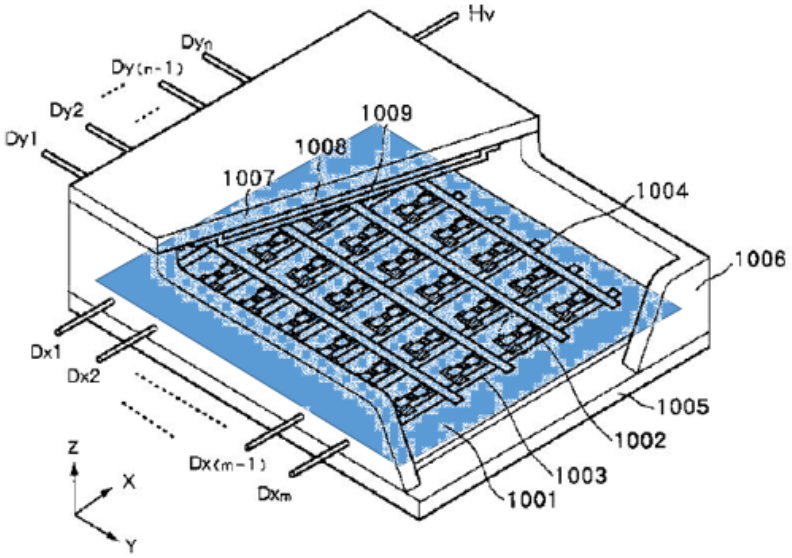

Id. at Fig. 4, [0032].

Masuda further teaches that a substrate was a well-known component of conventional display technology, including field emission displays. *See id.* at [0004]-[0005], [0008]-[0010]. Figure 19 shows a "typical example of an FE-type element" which features substrate 3010, identified in blue below:

[FIG. 19]

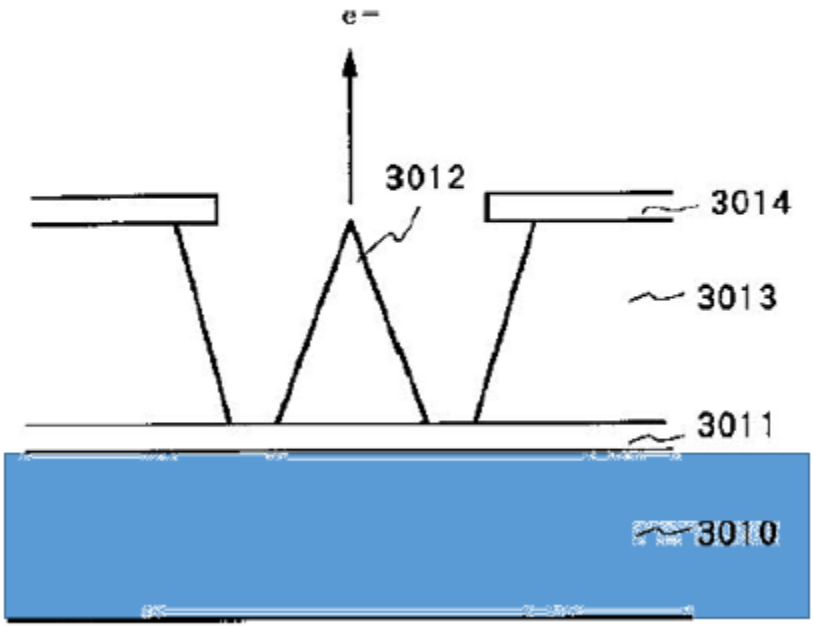

Id. at Fig. 19, [0008].

Furthermore, during prosecution of the Japanese counterpart patent, the Applicant acknowledged "Document 1 [i.e., Masuda] describes an image displaying device." EX-1007 at 7. Applicant did not argue that Masuda does not disclose a "substrate." *Id.*

For these reasons, Masuda discloses and renders obvious a substrate. EX-1003 at ¶ 86.

(c) 3[c] "a plurality of first effective optical regions provided above the substrate, first electro-optical elements being provided in the first effective optical regions;"

Masuda discloses "image displaying devices that use combinations of surface conduction-type emitting elements and fluorescent materials that emit light through exposure to an electron beam." EX-1009 at [0015].

The regions encompassing the fluorescent materials of a particular color, such as green, and their corresponding electron emitting elements constitute a "plurality of first effective optical regions." *See id.* at [0022]-[0026] (referencing "primary color display elements"), [0036]; EX-1003 at ¶¶ 60, 88. As shown by the table below, Masuda and the '736 patent both disclose a pattern that includes green effective optical regions.

'736 Patent at Fig. 2	Masuda at Fig. 5
First Effective Optical Regions 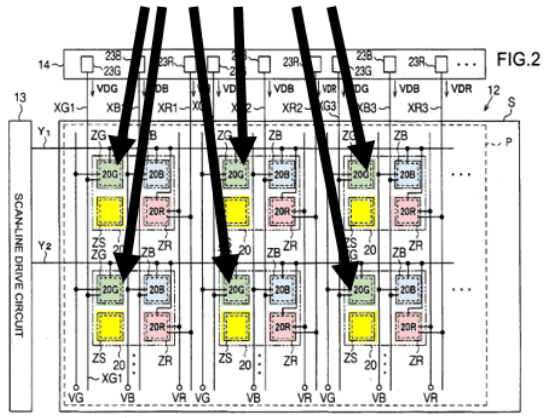	First Effective Optical Regions 1010: Black Conductive Material R: Red Fluorescent Body G: Green Fluorescent Body B: Blue Fluorescent Body x: Non-Display Element

Masuda's effective electro-optical regions are "above the substrate." "[F]luorescent materials of the three primary colors of red (R), green (G), and blue (B) ... are coated onto the fluorescent film" 1008. EX-1009 at [0036]. These materials, including the green fluorescent material, along with its corresponding electron emitting elements (1002) are above the substrate (1001) that is secured to the rear plate (1005). *See id.* at [0034] ("A substrate 1001 is secured to the rear plate 1005, and N x M surface conduction-type emitting elements 1002 are formed on the substrate 1001"), [0037] ("[T]he fluorescent film 1008 is formed on the faceplate substrate 1007."), Fig. 4 (depicting fluorescent film 1008 and emitting elements 1002 as above the substrate 1001 secured to the rear plate); EX-1003 at ¶ 89.

Masuda's effective electro-optical regions include "electro-optical elements." As stated above, Masuda's electro-optical regions encompass green "fluorescent material" that emits light when exposed to an electron beam. *See* EX-1009 at [0015]; EX-1003 at ¶ 87. This green material and its corresponding electron emitting element for a given pixel is thus an "electro-optical element."

Figure 4 is reproduced and highlighted below to identify the substrate (1001) (in blue), green fluorescent material (1008) (in green), and corresponding electron emitting elements (1002) (in green) when laid out in Masuda's improved checkerboard pattern. EX-1009 at [0032]-[0036]; EX-1003 at ¶ 90. This figure has been

annotated to identify exemplary first effective optical regions (corresponding to orange cylinders) and first electro-optical elements (corresponding to each pair of green highlighted fluorescent material 1008 and its corresponding green highlighted electron emitter 1002):

[FIG. 4]

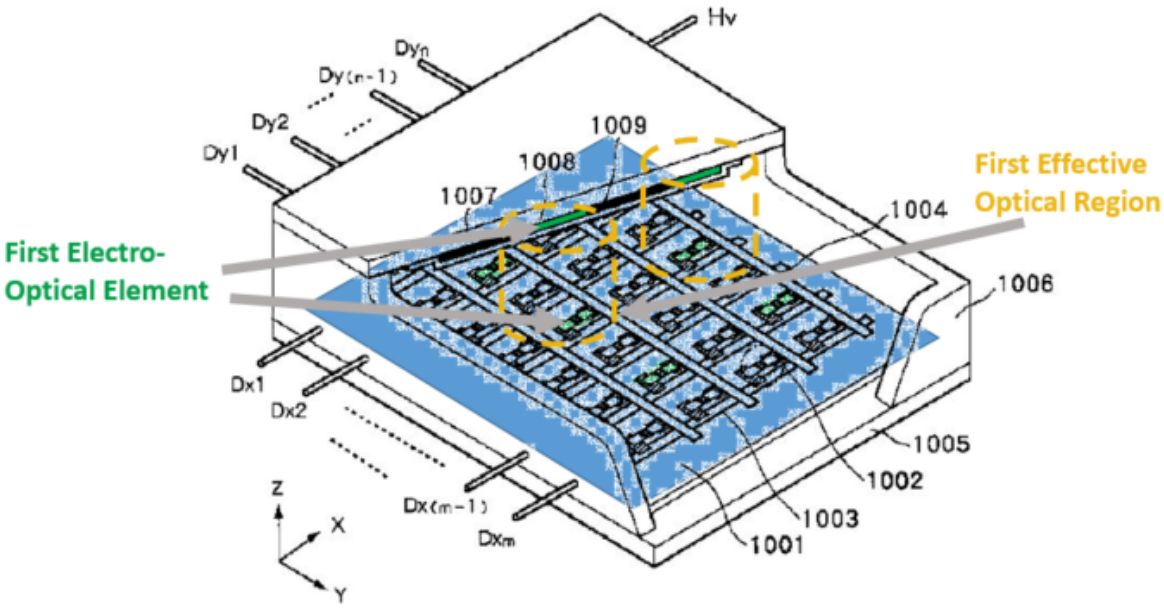

EX-1009 at Fig. 4.

Figure 7(d), reproduced and highlighted below, shows another "cross-sectional" view of green electro-optical elements. Masuda's series of Figure 7(a)-(d) illustrate the "method for manufacturing the flat surface conduction-type emitting element." EX-1009 at [0061]. The green rectangle on the bottom corresponds to "electron emitting portion" 1105, which emits electrons. *See id.* at [0061]-[0067] (explaining the steps that culminate in creation of this component), Fig. 7(c); EX-

1003 at ¶ 91. The green rectangle on the top is an "anode electrode" and, in some embodiments, is also "the fluorescent face of the display panel" that emits light when struck by electrons. EX-1009 at [0075]; EX-1003 at ¶ 91. In embodiments in which the anode electrode is distinct from the fluorescent material, the fluorescent material portion of the electro-optical element would nevertheless be above the electron emitting portion. *See* EX-1003 at ¶ 91.

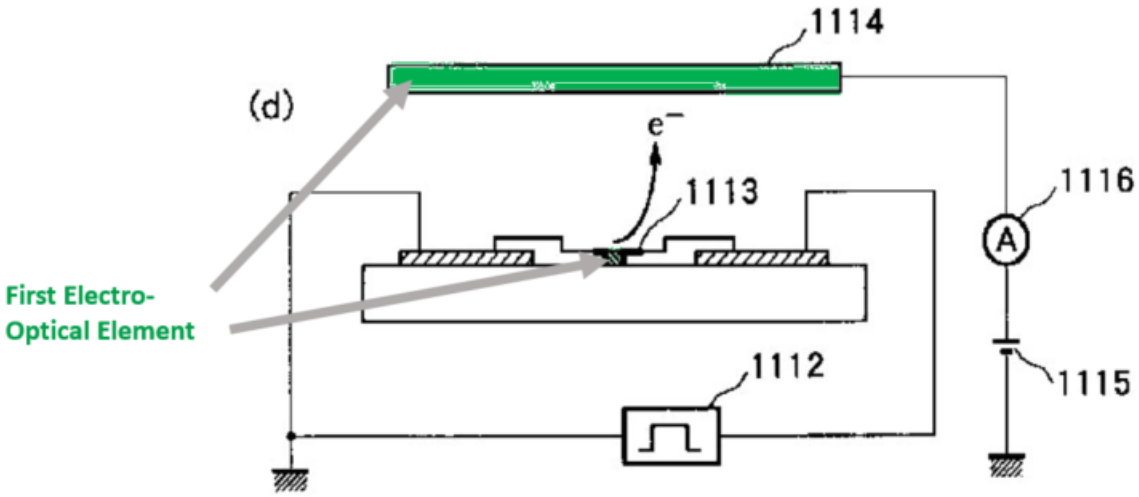

EX-1009 at Fig. 7(d).

Although several types of display technology were known in the art, the '736 patent expressly contemplates that it can be implemented by electron emitting-type displays, such as that disclosed in Masuda. *See* EX-1001 at 16:42-47; EX-1003 at ¶¶ 61, 74. In Masuda's display, "surface conduction-type emitting elements, or cold cathode elements of the *FE type* or MIM type may be used." EX-1009 at [0042]. The '736 patent discloses that type of display technology as a potential embodiment of the alleged invention, stating that its pixel circuits "may[]be

embodied as electronic circuits to drive electro-optical elements, for example, light-emitting elements, such as LED or *FED*." EX-1001 at 16:42-47; *see also* EX-1001 at 1:11-14, 1:41-42 (describing its "active matrix drive system" as capable of driving a "display having liquid-crystal elements, organic EL (electroluminescent) elements, electrophoresis elements, ***electron emitting elements***, or the like").

Furthermore, during prosecution of the Japanese counterpart patent, the Applicant acknowledged "Document 1 [i.e., Masuda] describes an image displaying device wherein a basic layout of two rows and two columns is formed through elements for displaying the three primary colors." EX-1007 at 7. Applicant did not argue that Masuda does not disclose "effective regions" or "electro-optical elements." *Id.*

For these reasons, Masuda discloses and renders obvious a plurality of first effective optical regions provided above the substrate, first electro-optical elements being provided in the first effective optical regions. EX-1003 at ¶¶ 87-92.

(d) 3[d] "a plurality of second effective optical regions provided above the substrate, second electro-optical elements being provided in the second effective optical regions; and"

Masuda discloses second "effective optical regions" above a substrate that provide "electro-optical elements." As explained in the previous section (3[c], incorporated here), Masuda discloses regions that encompass fluorescent materials of

a particular color and their corresponding electron emitting elements, which constitute "effective optical regions." *See also* EX-1009 at [0015].

The regions encompassing the fluorescent materials of another color, such as red, and their corresponding electron emitting elements constitute a "plurality of second effective optical regions." *See* EX-1009 at [0022]-[0026] (referencing "primary color display elements"), [0036]; EX-1003 at ¶¶ 60, 88. As shown by the table below, Masuda and the '736 patent both disclose a pattern that includes red effective optical regions.

'736 Patent at Fig. 2	Masuda at Fig. 5
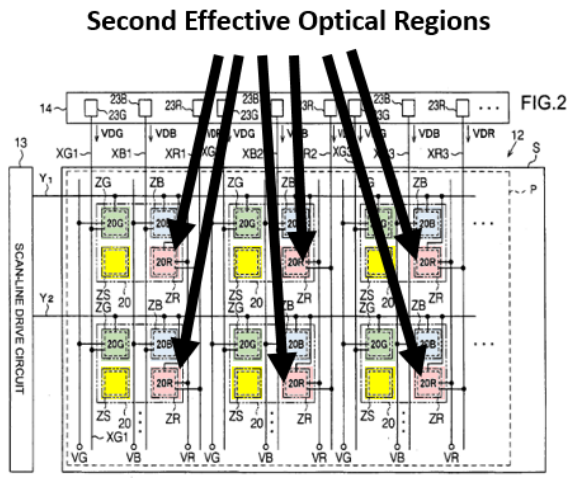	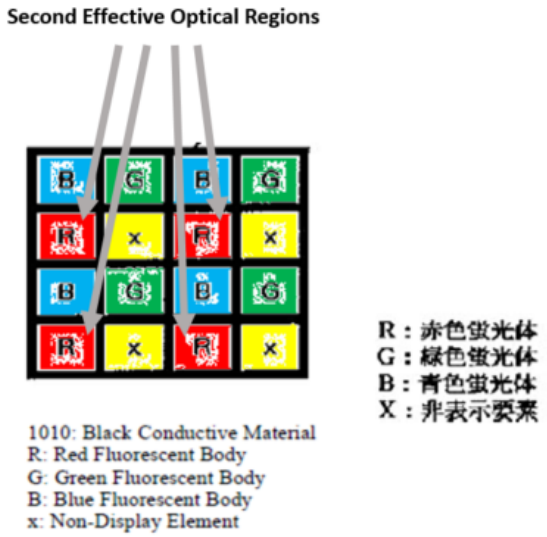

Moreover, Masuda's effective-optical regions are "above the substrate." *See supra* Ground 1, Claim 3[c]; *see also* EX-1009 at [0034], [0036]-[0037], Fig. 4; EX-1003 at ¶ 89.

Masuda's effective electro-optical regions include "electro-optical elements." As stated above, Masuda's electro-optical regions encompass red "fluorescent material" that emits light when exposed to an electron beam. *See* EX-1009 at [0015]. This red material and its corresponding electron emitting element for a given pixel is thus an "electro-optical element." *See* EX-1003 at ¶ 87.

Figure 4 is reproduced and highlighted below to identify the substrate (1001) (in blue), red fluorescent material (1008) (in red), and corresponding electron emitting elements (1002) (in red) when laid out in Masuda's improved checkerboard pattern. EX-1009 at [0032]-[0036]; EX-1003 at ¶ 90. This figure has been further annotated to identify exemplary second effective optical regions (corresponding to orange cylinders) and second electro-optical elements (corresponding to each pair of red highlighted fluorescent material 1008 and its corresponding red highlighted electron emitter):

[FIG. 4]

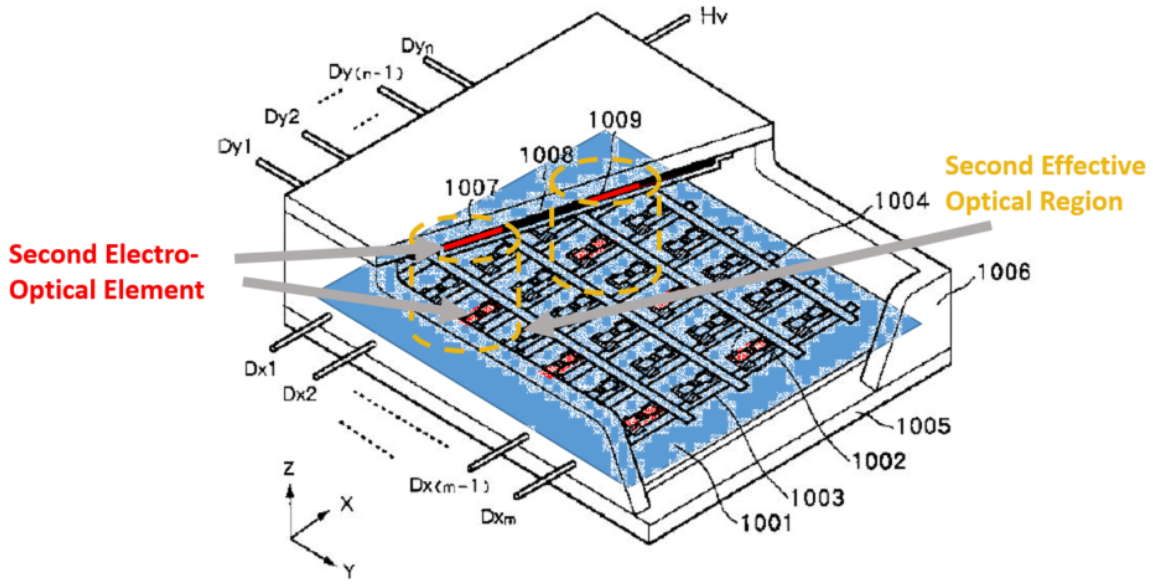

EX-1009 at Fig. 4.

Figure 7(d), reproduced and highlighted below, shows another "cross-sectional" view of red electro-optical elements. Masuda's series of Figure 7(a)-(d) illustrate the "method for manufacturing the flat surface conduction-type emitting element." EX-1009 at [0061]. The red rectangle on the bottom corresponds to "electron emitting portion" 1105, which emits electrons. *See id.* at [0061]-[0067] (explaining the steps that culminate in creation of this component), Fig. 7(c); EX-1003 at ¶ 91. The red rectangle on the top is an "anode electrode" and, in some embodiments, is also "the fluorescent face of the display panel" that emits light when struck by electrons. EX-1009 at [0075]; EX-1003 at ¶ 91. In embodiments in which the anode electrode is distinct from the fluorescent material, the fluorescent material portion of the electro-optical element would nevertheless be above

the electron emitting portion. *See* EX-1003 at ¶ 91.

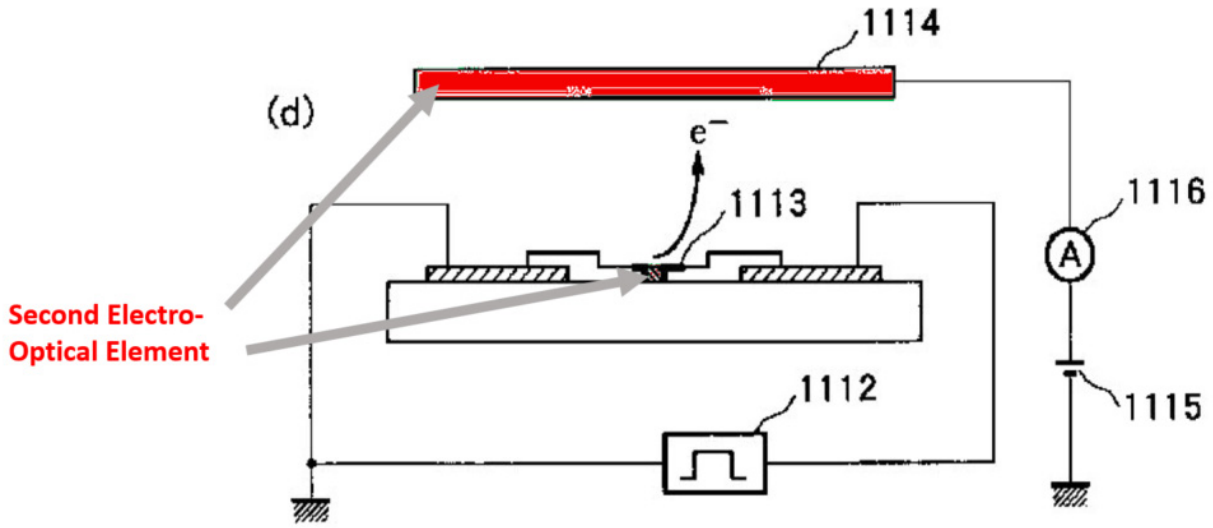

EX-1009 at Fig. 7(d).

For these reasons, Masuda discloses and renders obvious a plurality of second effective optical regions provided above the substrate, second electro-optical elements being provided in the second effective optical regions. EX-1003 at ¶¶ 87-92.

(e) 3[e] "a plurality of ineffective optical regions provided above the substrate, no electro-optical elements being provided in the ineffective optical regions,"

Masuda discloses "ineffective optical regions" above a substrate. It discloses "a display panel for displaying a color image, with primary color display elements arranged in a matrix, where a two-row, two-column basic arrangement is formed from three primary color display elements and ***one element that does not contribute to the image display***." EX-1009 at [0022]; *see also id.* at [0027]-[0029]

(referencing "non-display element").

Masuda's "non-display element" constitutes an ineffective optical region. EX-1003 at ¶ 78. The '736 patent discloses that "ineffective optical regions" correspond to "dummy forming regions" (EX-1001 at 12:19-21) that "can ensure that black is displayed" and "[a]s a result, the contrast ratio of the display can be enhanced." EX-1001 at 8:4-7. Additionally, these regions allegedly reduce "directional viewing variation." *Id.* at 12:61-67, 14:8-11. Masuda's "non-display element" performs the same "dummy" function in the sense that it does not contribute to the image display and is intended to increase contrast and reduce directional viewing variation. EX-1003 at ¶¶ 54-55, 93. As shown by the table below, Masuda and the '736 patent both disclose a pattern that includes ineffective optical regions.

'736 Patent at Fig. 2	Masuda at Fig. 5
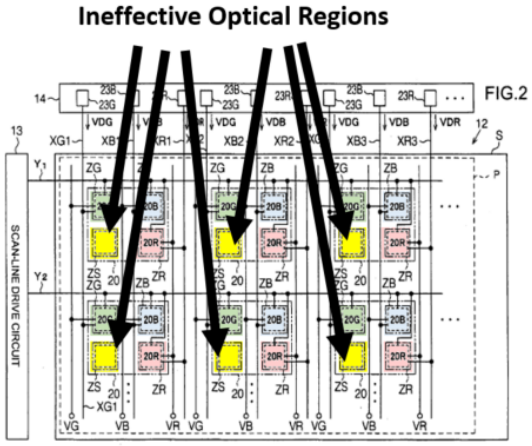	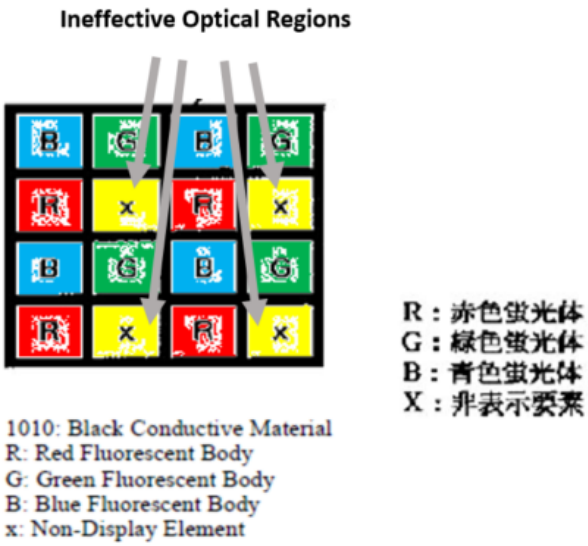

Because Masuda's "non-display element" does not contribute to the image

display, a POSITA would have understood or found obvious that it has no electro-optical element. EX-1003 at ¶ 93; *see also* EX-1001 at [0036]. Given that Masuda's display emits light by having electrons strike phosphor material of different colors, it would have been obvious that the non-display region, which by design does not contribute to image, should not have the phosphor material. Including phosphor material in those regions would needlessly risk unintentional light emission if stray electrons from adjacent sub-pixels struck that material. *Id.* If there is no phosphor material for a given ineffective optical region, there is also no electro-optical element because phosphor is necessary for the region to emit optical light. *Id.* A POSITA would also have recognized that omitting electro-optical elements in those regions would not make the display more costly. *Id.* Masuda itself acknowledges that unnecessary components may be omitted by teaching, for example, "there ***is no need to provide memory for the non-display element portion***." EX-1009 at [0113].

Furthermore, during prosecution of the Japanese counterpart patent, the Applicant acknowledged "Document 1 [i.e., Masuda] describes an image displaying device wherein a basic layout of two rows and two columns is formed through elements for displaying the three primary colors and ***one element that does not contribute to the image display***." EX-1007 at 7. Applicant did not argue that Masuda does not disclose "ineffective regions" with no "electro-optical elements." *Id.*

For these reasons, Masuda discloses and renders obvious a plurality of ineffective optical regions provided above the substrate, no electro-optical elements being provided in the ineffective optical regions. EX-1003 at ¶ 93.

(f) 3[f] "each of the whole ineffective optical regions being arranged so as to be sandwiched by two of the first effective optical regions and so as to be sandwiched by two of the second effective optical regions."

Masuda discloses that "each of the whole"[11] "ineffective optical regions" are sandwiched by two of the first "effective optical regions" and sandwiched by two

[11] The presence of dummy pixels located at the edges of the display does not undermine that Masuda discloses "each" of the ineffective optical regions are sandwiched. The '736 patent specifically provides an embodiment in which the ineffective optical regions along the edges of the device are not "sandwiched." *See* EX-1001 at 8:28-33 ("That is, except for the pixel circuits 20 that are located at the top, bottom, left, and right edges, the dummy forming regions ZS of the pixel circuits 20 are arranged so as to be sandwiched by the green pixel forming regions ZG in the vertical direction (column direction)."). The '736 patent does not disclose any embodiments where ineffective optical regions are absent from the display's edges. *See id.* at Fig. 2 (illustrating ineffective optical region along first pixel column).

of the second "effective optical regions." Masuda discloses that a "two-row, two-column basic arrangement is formed from three primary color display elements and one element that does not contribute to the image display." EX-1009 at [0022].

Masuda's "checkerboard" pattern pixel arrangement shows that the ineffective optical regions (marked by "X") are sandwiched, for example, by the green and red pixels. The top and bottom edges of a given ineffective optical region in Masuda are each bounded by a green pixel, such that the ineffective optical region is between two "same-color" regions, which is how the '736 patent uses the term "sandwich." *See, e.g.*, EX-1001 at 16:12-16. Likewise, the right and left edges of that given ineffective region are each bounded by a red pixel, forming another sandwich.

The "whole" of Masuda's ineffective optical regions are sandwiched. While the '736 patent itself does not elaborate on what it means for a "whole" region to be sandwiched, its prosecution history indicates that the term means that no portion of the ineffective optical region extends beyond the effective optical regions that sandwich it. *See supra* Section III.B.1 (addressing how the "whole" limitation was introduced via amendment to overcome prior art); EX-1003 at ¶ 94. In Masuda, as shown by the table below, no portion of the ineffective optical region extends beyond the effective optical regions that sandwich it, similar to the '736 patent.

'736 Patent at Fig. 2 (annotated)	**Masuda at Fig. 5** **Green: "First Effective Optical Regions"** **Red: "Second Effective Optical Regions"** **Yellow: "Ineffective Optical Regions"**
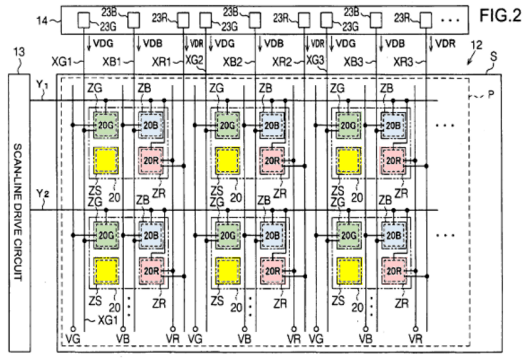	

Furthermore, during prosecution of the Japanese counterpart patent, Applicant did not argue that Masuda failed to disclose ineffective optical regions that are "interposed between" or "sandwiched by" effective optical regions. *See* EX-1007 at 7-8.

For these reasons, Masuda discloses and renders obvious each of the whole ineffective optical regions being arranged so as to be sandwiched by two of the first effective optical regions and so as to be sandwiched by two of the second effective optical regions. EX-1003 at ¶ 94.

3. Claim 4 "The electro-optical device according to claim 3, wherein the first effective optical regions are not adjacent to each other."

Masuda discloses that the first (e.g., green) "effective optical regions" are

not adjacent to each other, as shown by Masuda's Figure 5 reproduced and discussed above with respect to claim 3. *See supra* Section IV.A.2; EX-1009 at Fig. 5; EX-1003 at ¶ 95.

4. Claim 5 "The electro-optical device according to claim 3, the first effective optical regions and the second effective optical regions having the same shape."

Masuda discloses the first (e.g., green) and second (e.g., red) "effective optical regions" having the same shape (a square), as shown by Masuda's Figure 5 reproduced and discussed above with respect to claim 3. *See supra* Section IV.A.2; EX-1009 at Fig. 5; EX-1003 at ¶ 96.

5. Claim 13 "The electro-optical device according to claim 3, the first electro-optical element and the second electro-optical element including two electro-optical elements selected from an electro-optical element that emits green, an electro-optical element that emits blue, and an electro-optical element that emits red."

As disclosed above with respect to the sections discussing 3[c] and 3[d], Masuda discloses first and second electro-optical elements. Masuda further discloses that these elements and these films can be green, blue, or red, as shown by Masuda's Figure 5 reproduced and discussed above with respect to claim 3. *See supra* Section IV.A.2; EX-1009 at [0018], [0036], Fig. 5; EX-1003 at ¶ 97.

6. Claim 16 "The electro-optical device according to claim 3, wherein the second effective optical regions are not arranged so as to be adjacent to each other."

Masuda discloses that the second (e.g., red) "effective optical regions" are

not adjacent to each other, as shown by Masuda's Figure 5 reproduced and discussed above with respect to claim 3. *See supra* Section IV.A.2; EX-1009 at Fig. 5; EX-1003 at ¶ 95.

7. Claim 17 "The electro-optical device according to claim 3, each of the first effective optical regions in which the first electro-optical elements are provided being arranged at regular intervals in a column and row directions of a display area."

Masuda discloses that the first (e.g., green) "effective optical regions" are provided at regular intervals in column and row directions, as shown by Masuda's Figure 5 reproduced and discussed above with respect to claim 3. *See supra* Section IV.A.2; EX-1009 at [0030], [0106], Fig. 5; EX-1003 at ¶¶ 98-99. The '736 patent describes green, blue, red, and dummy regions being "formed in a matrix" such that any given "region is provided between two same-color forming regions," as involving "regular intervals in the vertical and horizontal directions." EX-1001 at 14:1-11. Masuda's effective optical regions are also arranged at regular intervals in column and row directions because they repeat in a pattern such that the effective optical regions are evenly spaced from each other. *See* EX-1009 at [0106] (referencing "fluorescent materials . . . arranged in a pattern"); *id.* at Fig. 5 (showing green pixels that appear at every other position in both the horizontal and vertical directions).

B. Ground 1B: Claims 3-5, 7, 9, and 13-17 are obvious over Inoue in view of Masuda

1. Overview of Inoue

JP2002-278504A ("Inoue") is a Japanese patent application that published on September 27, 2002, and thus qualifies as prior art under pre-AIA 102(a). Inoue relates to a "spontaneous light emitting display device" with features intended to "suppress brightness variation in the display." EX-1011 at [0001]. In particular, Inoue discloses an "organic EL" type of display panel—the same type of display to which the '736 patent is primarily focused. *See id.* at [0002]-[0004]; EX-1001 at 1:9-14, 7:44-57.

Inoue first provides a background of prior art organic EL displays, including "active matrix type" ("AM-type") organic EL displays—the same type of display described by the '736 patent. *See* EX-1011 at [0002]-[0008]; EX-1001 at 1:11-42. It teaches that these types of displays provide a "T[hin] F[ilm] T[ransistor] drive circuit in each pixel" intended to "reduce variations in brightness and power consumption." EX-1011 at [0004]; EX-1003 at ¶¶ 76-77. It further teaches that, because "it is hard to create a driving element with a uniform characteristic over the entire organic EL panel region . . . the current flowing to each pixel is different and the brightness varies." EX-1011 at [0005]. In other words, because "variations in the characteristics of the light-emitting elements themselves cannot be suppressed, . . . the brightness of each pixel varies when displayed at the same gradation." *Id.*

at [0010].

Inoue addresses that problem by using "light-detecting elements" to control the "amount of light emitted from the light-emitting elements." *Id.* at [0011], [0022]-[0026]; EX-1003 at ¶¶ 76-77. These light-detecting elements are provided in the circuitry for each pixel. *See* EX-1011 at Fig. 1, Fig. 4, [0019] (describing element 8 as the light-detecting element), [0027] (same).

2. The Inoue-Masuda Combination

In the combination of Inoue and Masuda, Inoue's organic EL elements and their respective driving circuitry (a pixel) are arranged in the pattern taught by Masuda that includes three color pixel elements and one non-display element.

Inoue's display device, illustrated in figure 2, includes "a portion [24] in which a large number of pixels including the light-emitting element 56 . . . are formed in a matrix." EX-1011 at [0023]-[0024]. When implemented using an active-matrix array, each pixel includes a "drive circuit" as well as an "organic EL element." *See id.* at [0004]-[0006]; EX-1003 at ¶ 77.

[Fig. 2]

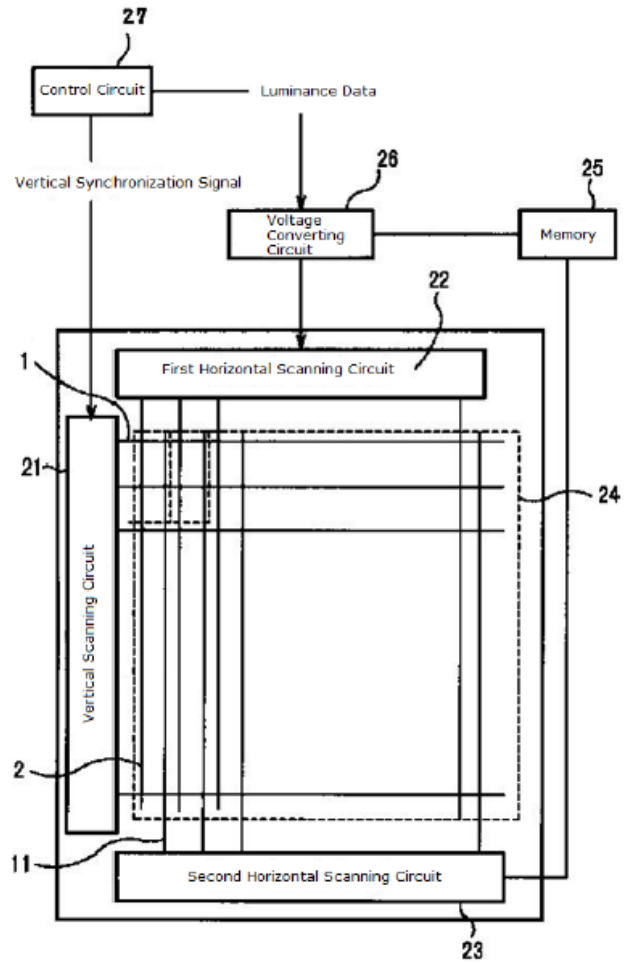

EX-1011 at Fig. 2.

A POSITA would have recognized that Masuda's pixel pattern could be implemented in Inoue's display by arranging Inoue's blue, green, and red pixels (i.e., organic EL elements and their corresponding drive circuit) as shown below and simply omitting any EL element in the fourth spot of the pixel pattern, as shown below. EX-1003 at ¶¶ 78-83.

Masuda at Fig. 5 (pattern with non-display elements)	Inoue Pixel Pattern of Fig. 5 Modified to Incorporate Teachings of Masuda
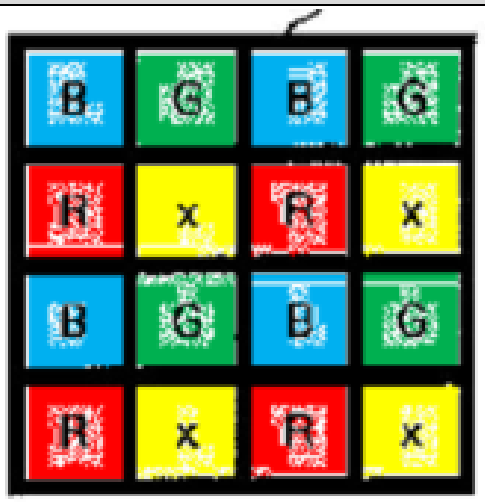	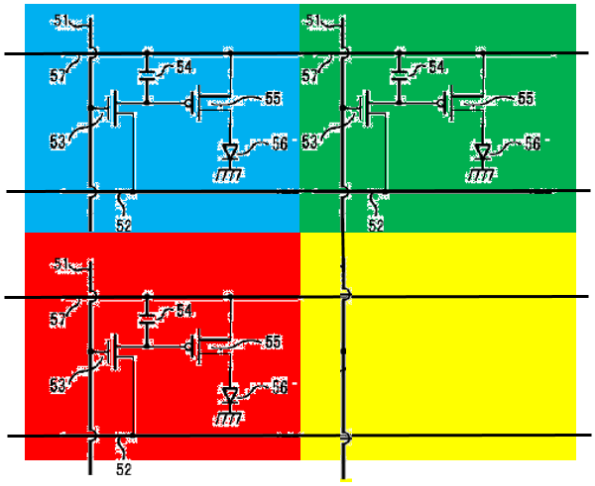

3. Motivations to Combine Inoue and Masuda

A POSITA would have been motivated to combine Inoue and Masuda in this manner for multiple reasons.

First, both references constitute "analogous art" to the '736 patent. *See Donner Tech., LLC v. Pro Stage Gear, LLC*, 979 F.3d 1353, 1359 (Fed. Cir. 2020) ("Two separate tests define the scope of analogous prior art: (1) whether the art is from the same field of endeavor, regardless of the problem addressed and, (2) if the reference is not within the field of the inventor's endeavor, whether the reference still is reasonably pertinent to the particular problem with which the inventor is involved.").

The ’736 patent, Masuda, and Inoue all pertain to the same field of endeavor: an electro-optical display using display elements arranged in a matrix. *See, e.g.*, EX-1001 at 1:8-9 (“The present invention relates to *an electro-optical device, an active matrix substrate*, and an electronic apparatus.”); EX-1009 at [0001] (“The present invention relates to *a display panel for producing a color display using primary color display elements that are arranged in a matrix, and to an image displaying device equipped with said display panel*.”); EX-1011 at [0001] (“The present invention relates to a *spontaneous light-emitting display device provided with a light-emitting element matrix*, and the object of the present invention is to suppress brightness variation in the display.”).

The ’736 patent, Masuda, and Inoue also address the same problem—improving display quality. Inoue discloses that, although active-matrix type organic EL display panels have various advantages over passive-matrix type displays, “it is hard to create a driving element with a uniform characteristic over the entire organic EL panel region” and, as a result, “the current value flowing to each pixel is different and the brightness varies.” EX-1011 at [0004]-[0005].

Masuda teaches a pixel pattern designed to reduce “the difference in luminosity between columns or difference in luminosity between rows.” EX-1009 at [0021]. As illustrated by Masuda’s Figure 3(b), Masuda teaches that “[t]ypically, when primary color display elements are arranged in two rows and two columns

and one desired color is repeated in spatial additive color mixing, it is necessary to consider the luminosity values of the individual elements in arranging the primary color display elements." *Id.* at [0024]. Such conventional arrangements could not achieve "maximum performance" because the output of the repeated element (e.g., green in Masuda Figure 3(b)) must be "limited to half in order to . . . achieve a color balance." *Id.* at [0020]. Moreover, these conventional arrangements caused the viewer to perceive alternating red and blue horizontal or vertical lines. *Id.* at [0019]. Masuda's improved checkerboard pattern includes "one element that does not contribute to the image display" and places the "the primary color display element that has the highest luminosity value and the primary color display element that has the second-highest luminosity value . . . at opposite corner positions." *Id.* at [0022]. Masuda's improved checkerboard pattern rearranges the pixels to minimize the "maximum luminosity difference between rows or columns." *Id.* at [0027]. As a result, "the less the observer will be made to feel that there is striped interference in the display device." *Id.*

Masuda's Figure 21 quantifies luminosities by row and column for different possible arrangements of R, B, G, and "non-display" elements. *Id.* at [0028]. "[T]he minimum value among the maximum luminosity differences between columns and rows will be 0.40, where this occurs when the red (R) and green (G) are arranged at opposite corner positions." *Id.*

[FIG. 21]

				Sum of Luminosity for Each Row and Column				Maximum Luminosity Difference between Rows or Columns
				First Row	Second Row	Third Row	Fourth Row	
m11	m12	m21	m22	行・列ごとの輝度和				行間・列間の最大輝度差
				1行目	2行目	3行目	4行目	
R	G	B	x	0.89	0.11	0.41	0.59	0.78
R	G	x	B	0.89	0.11	0.30	0.70	0.78
R	B	G	x	0.41	0.59	0.89	0.11	0.78
R	B	x	G	0.41	0.59	0.30	0.70	0.40
R	x	G	B	0.30	0.70	0.89	0.11	0.78
R	x	B	G	0.30	0.70	0.41	0.59	0.40
G	R	B	x	0.89	0.11	0.70	0.30	0.78
G	R	x	B	0.89	0.11	0.59	0.41	0.78
G	B	R	x	0.70	0.30	0.89	0.11	0.78
G	B	x	R	0.70	0.30	0.59	0.41	0.40
G	x	R	B	0.59	0.41	0.89	0.11	0.78
G	x	B	R	0.59	0.41	0.70	0.30	0.40
B	R	G	x	0.41	0.59	0.70	0.30	0.40
B	R	x	G	0.41	0.59	0.11	0.89	0.78
B	G	R	x	0.70	0.30	0.41	0.59	0.40
B	G	x	R	0.70	0.30	0.11	0.89	0.78
B	x	R	G	0.11	0.89	0.41	0.59	0.78
B	x	G	R	0.11	0.89	0.70	0.30	0.78
x	R	G	B	0.30	0.70	0.59	0.41	0.40
x	R	B	G	0.30	0.70	0.11	0.89	0.78
x	G	R	B	0.59	0.41	0.30	0.70	0.40
x	G	B	R	0.59	0.41	0.11	0.89	0.78
x	B	R	G	0.11	0.89	0.30	0.70	0.78
x	B	G	R	0.11	0.89	0.59	0.41	0.78

Id. at Fig. 21.

A POSITA implementing Inoue's display panel of pixels would have been motivated to arrange those pixels in the improved checkerboard pattern taught by Masuda. As discussed above, Inoue seeks to reduce variation in brightness or luminosity across pixels. For that reason, a POSITA implementing Inoue would have been motivated to seek out complementary techniques to reduce that variation

as much as possible. EX-1003 at ¶¶ 78-83. Masuda provides such a complementary technique. Masuda's figure 21, reproduced above, and accompanying prose, teaches how luminosity varies by how color pixels are arranged. A POSITA implementing Inoue, upon reviewing Masuda's teachings, would have recognized that how pixels are arranged in Inoue matters, and that the variation in brightness across pixels, rows, and columns could be reduced if pixels were arranged in the checkerboard pattern taught by Masuda. A POSITA implementing Inoue would have recognized that, compared to other possible pixel arrangements, Masuda's pixel pattern would reduce an observer's impression "that there is striped interference in the display device." EX-1009 at [0027]. That Masuda's checkerboard pattern reduces variation in pixel luminance and is generally applicable to different types of display devices is further confirmed by Kwon, which recognizes that the same pattern of red, blue, green, and a "black" pixel "has the advantage of being able to make the luminance between pixels uniform and improve the contrast." EX-1013 at Abstract.

Second, arranging Inoue's pixels in the pattern taught by Masuda would have amounted to an application of known techniques that would have created expected results. *See Presidio Components, Inc. v. AVX Corp.*, 825 F. App'x 909, 916 (Fed. Cir. 2020) (affirming PTAB determination of unpatentability); EX-1003 at ¶¶ 81-82.

Although Inoue itself does not specify how to lay out pixels in its display, it specifically requires that the pixels are "formed in a matrix." *See* EX-1011 at [0023]. Without laying out color pixels in *some* manner, Inoue's device would be inoperable. *See* EX-1003 at ¶¶ 81-82. A desire to make Inoue's display operable would have thus led a POSITA to consider different, known pixel geometries that could have been used to specify the arrangement of Inoue's pixels. *Id.*

Masuda's arrangement was a known option that a POSITA would have found obvious to use. *Id.* Indeed, Masuda's teachings of a checkerboard pattern with a non-display element that reduces differences in luminosity is generally applicable to any display technology that uses color elements to implement a pixel. *Id.* at ¶¶ 74-75. Masuda itself mentions two types of displays—FE-type and MIM-type—as potentially using the checkerboard pattern. EX-1009 at [0042]. Furthermore, KR960012168A to Kwon discloses a "plasma display device" using the same checkerboard pattern. *See supra* Section IV.A.1; EX-1013 at Fig. 4; *id.* at Abstract. Thus, Kwon confirms that the type of pixel arrangement described by Masuda was a known option that a POSITA would have found obvious to consider for the pixel arrangement in Inoue's display. EX-1003 at ¶¶ 74-75.

Third, a POSITA arranging Inoue's pixels in the pattern taught by Masuda would have had a reasonable expectation of success in making the proposed com-

bination. As discussed above, Masuda's teachings are generally applicable to different types of display technologies. Masuda itself describes its teachings as applicable to FE-type and ME-type displays, EX-1009 at [0042], and Kwon describes the same pattern as applicable to plasma displays, EX-1013 at Fig. 4, Abstract. A POSITA would have no reason to doubt that the same pattern would be equally successful in an organic EL display, such as that disclosed by Inoue. *See* EX-1003 at ¶ 83.

Fourth, during prosecution of the Japanese counterpart application, the Applicant acknowledged that Inoue and Masuda could be combined together by describing the characteristics of "an invention that is achieved through combining the driving method disclosed in [Inoue] with the layout of display elements described in [Masuda]." *See* EX-1007 at 8. This statement binds Patent Owner. *See* 37 C.F.R. § 1.104 ("In rejecting claims the examiner may rely upon admissions by the applicant . . . as to any matter affecting patentability."); *Riverwood Int'l Corp. v. R.A. Jones & Co.*, 324 F.3d 1346, 1354 (Fed. Cir. 2003) ("This court and its predecessor have held that a statement by an applicant during prosecution identifying certain matter not the work of the inventor as "prior art" is an admission that the matter is prior art."); *Bos. Sci. Scimed, Inc. v. Cook Grp. Inc.*, 809 F. App'x 984, 989 (Fed. Cir. 2020) ("[A]n admission in a preliminary patent owner response, just like an admission in any other context, is evidence appropriately considered by a

factfinder."). Although made before a foreign patent office, the statement still binds Patent Owner since the foreign and domestic applications "are related and share a familial relationship." *See Apple Inc. v. Motorola, Inc.*, 757 F.3d 1286, 1313 (Fed. Cir. 2014), overruled on other grounds by *Williamson v. Citrix Online, LLC*, 792 F.3d 1339 (Fed. Cir. 2015) (approving district court reliance upon statements to the JPO).

4. Claim 3

(a) 3[a] "An electro-optical device comprising:"

The Inoue-Masuda combination renders obvious an "electro-optical device." Inoue, for example, discloses a "spontaneous light-emitting display device" that "comprises a plurality of light emitting elements arranged in a matrix." EX-1011 at Abstract; *see also e.g. id.* at [0001]-[0002], [0004], [0005], [0022], Fig. 1, Fig. 2, Fig. 5. Inoue's "light emitting display device" is an "electro-optical device." *See also supra* Ground 1, 3[a] (discussion of Masuda's disclosure of an "electro-optical display").

During prosecution of the Japanese counterpart patent, the Applicant acknowledged that "Document 2 [i.e., Inoue] [describes] a **display device** of an active matrix driving method." EX-1007 at 8. Applicant did not argue that the Inoue-Masuda combination fails to render obvious an "electro-optical display." *Id.*

For these reasons, the Inoue-Masuda combination renders obvious an electro-optical device. EX-1003 at ¶ 101.

(b) 3[b] "a substrate"

The Inoue-Masuda combination renders obvious "a substrate." Inoue, for example, discloses an organic EL display panel that includes pixel units. A cross-section of such a pixel unit shows a "transparent insulating substrate" 40. *See* EX-1011 at [0024]-[0025]. This substrate is annotated in blue in figure 3 below.

[Fig. 3]

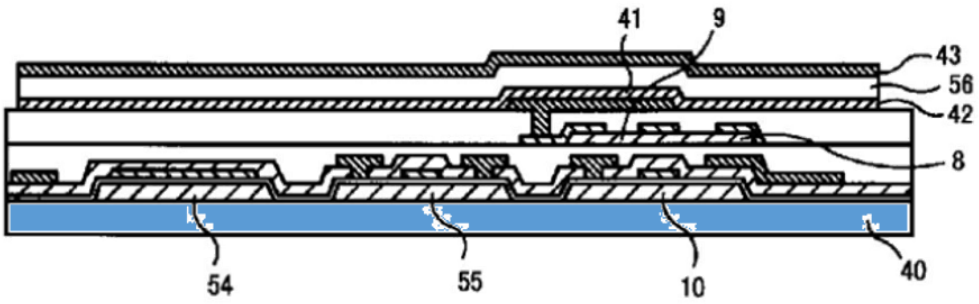

Id. at Fig. 3. *See also supra* Ground 1, 3[b] (discussion of Masuda's disclosure of a "substrate").

Furthermore, during prosecution of the Japanese counterpart patent, the Applicant acknowledged that "Document 2 [i.e., Inoue] [describes] a **display device** of an active matrix driving method." EX-1007 at 8. Applicant did not argue that the Inoue-Masuda combination fails to render obvious an "electro-optical display." *Id.*

For these reasons, the Inoue-Masuda combination renders obvious a substrate. EX-1003 at ¶ 102.

(c) 3[c] "a plurality of first effective optical regions provided above the substrate, first electro-optical elements being provided in the first effective optical regions;"

The Inoue-Masuda combination renders obvious a plurality of first effective optical regions provided above the substrate. Inoue discloses that "the first transistor 53, the second transistor 55, the third transistor 10, and the capacitor 54 are formed on the transparent insulating substrate 40." EX-1011 at [0006]. Figure 3, reproduced below, is annotated to show three of these circuit components in orange, which appear above a substrate shown in blue.

[Fig. 3]

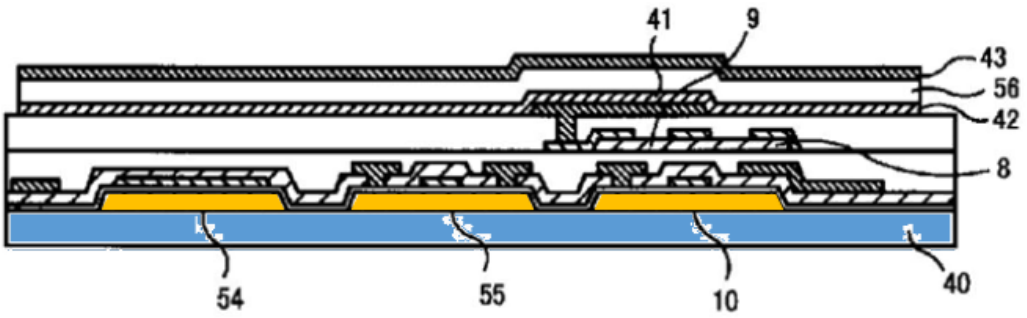

The region that includes this unit pixel circuitry and an organic EL element 56 constitutes an "effective optical region provided above the substrate." *Id.* at [0006]-[0007]; *id.* at [0021]-[0026] (referencing "light-emitting element 56"). This

is confirmed by comparing Inoue's figure 1 to the '736 patent's figure 3, both annotated to show the effective optical region in green and the electro-optical element in a different shade of green. EX-1003 at ¶¶ 103-105.

Inoue at Fig. 1	'736 Patent at Fig. 3
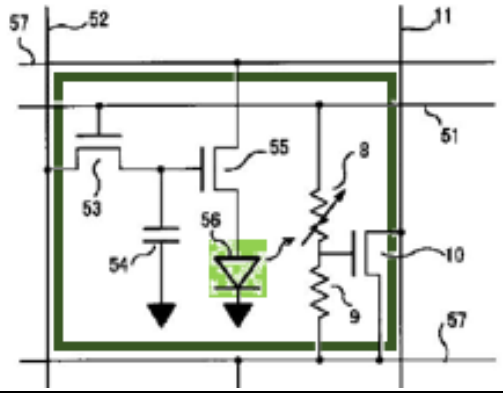	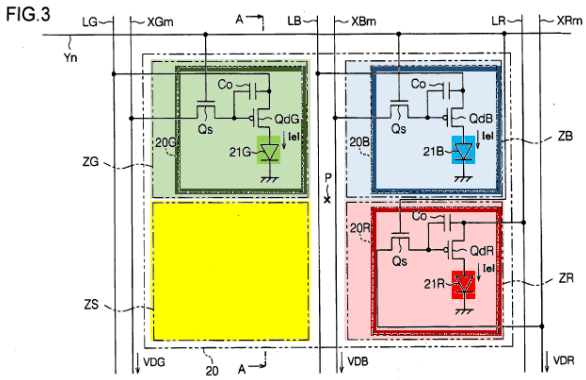

The effective optical regions of the Inoue-Masuda combination encompass the circuitry and organic EL element of a particular color, such as green. *See also* EX-1009 at [0022]-[0026] (referencing "primary color display elements").

'736 Patent at Fig. 2	Masuda at Fig. 5
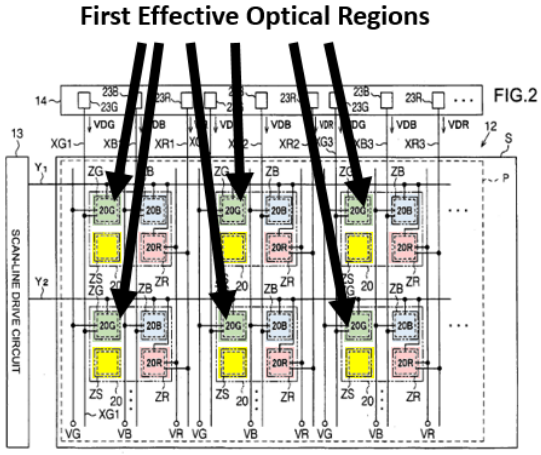	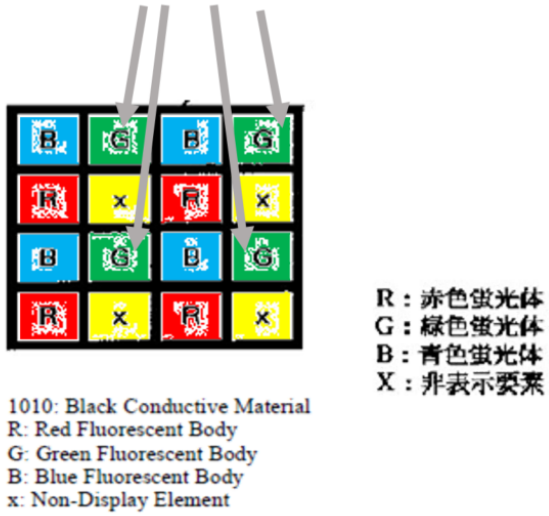

See also supra Ground 1, 3[c] (discussion of Masuda's disclosure of first effective optical regions and first electro-optical elements).

Furthermore, during prosecution of the Japanese counterpart patent, the Applicant acknowledged that "an invention that is achieved through combining the driving method disclosed in [Inoue] with the layout of display elements described in [Masuda] would be no more than an invention wherein **a basic layout of two rows and two columns is formed through three primary color display elements** and one element that does not contribute to an image display, in an organic EL display device of an active matrix display system." EX-1007 at 8. Applicant did not argue that the Inoue-Masuda combination fails to render obvious "effective optical regions" with "electro-optical elements." *Id.*

For these reasons, the Inoue-Masuda combination renders obvious a plurality of first effective optical regions provided above the substrate, first electro-optical elements being provided in the first effective optical regions. EX-1003 at ¶¶ 103-105.

(d) 3[d] "a plurality of second effective optical regions provided above the substrate, second electro-optical elements being provided in the second effective optical regions; and"

The Inoue-Masuda combination renders obvious second "effective optical regions" above a substrate that provide "electro-optical elements." As explained in

the previous section (3[c], incorporated here), the Inoue-Masuda combination renders obvious regions that encompass organic EL elements of a particular color and their corresponding circuitry, which constitute "effective optical regions." This is confirmed by comparing Inoue's figure 1 to the '736 patent's figure 3, both annotated to show the effective optical region in red and the electro-optical element in a different shade of red. EX-1003 at ¶¶ 103-105.

Inoue at Fig. 1	'736 Patent at Fig. 3
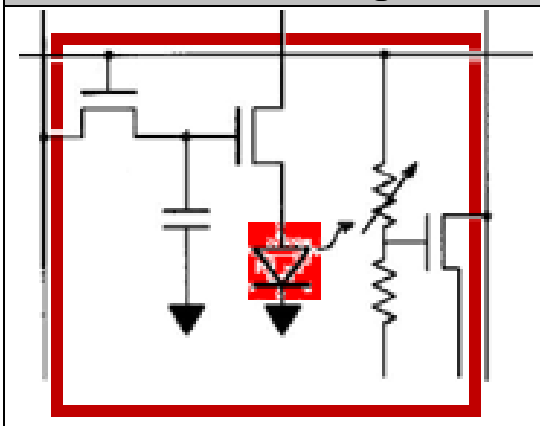	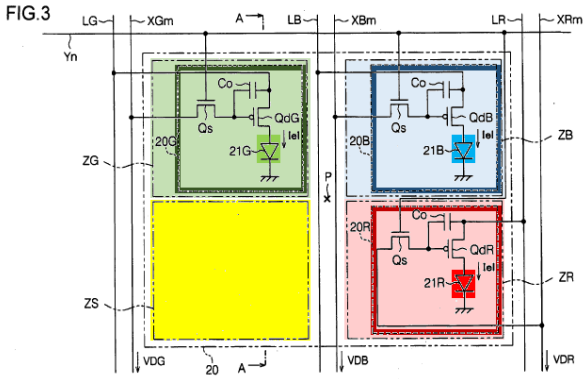

The regions corresponding to another color, such as red, constitute a "plurality of second effective optical regions." *See* EX-1009 at [0022]-[0026] (referencing "primary color display elements").

’736 Patent at Fig. 2	Masuda at Fig. 5
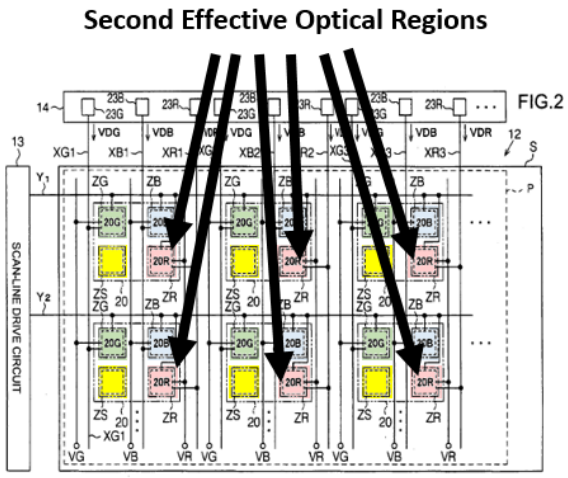	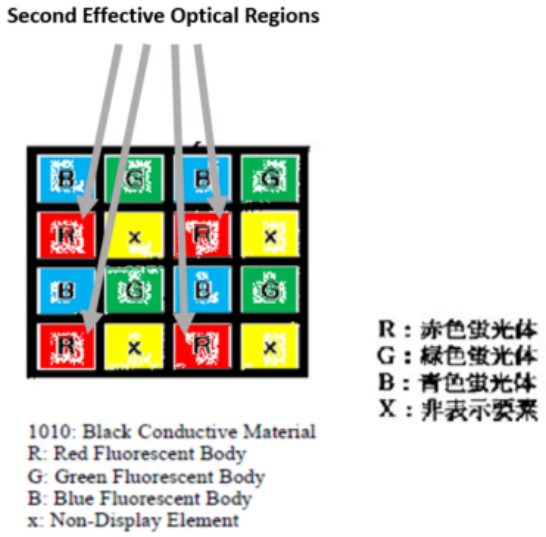

See also supra Ground 1, 3[d] (discussion of Masuda’s disclosure of second effective optical regions and second electro-optical elements).

For these reasons, the Inoue-Masuda combination renders obvious a plurality of second effective optical regions provided above the substrate, second electro-optical elements being provided in the second effective optical regions. EX-1003 at ¶¶ 103-105.

(e) 3[e] “a plurality of ineffective optical regions provided above the substrate, no electro-optical elements being provided in the ineffective optical regions,”

The Inoue-Masuda combination renders obvious “ineffective optical regions” above a substrate. Masuda discloses “a display panel for displaying a color image, with primary color display elements arranged in a matrix, where a two-row,

two-column basic arrangement is formed from three primary color display elements and *one element that does not contribute to the image display*." EX-1009 at [0022]; *see also id.* at [0027]-[0029] (referencing "non-display element"). As discussed above, a POSITA would have been motivated to lay out Inoue's organic EL-based pixels in the pattern taught by Masuda, which includes the non-display element. *See supra* Section IV.B.3.

Masuda's "non-display element" constitutes an ineffective optical region. The '736 patent discloses that "ineffective optical regions" correspond to "dummy forming regions" (EX-1001 at 12:19-21) that "can ensure that black is displayed" and, "[a]s a result, the contrast ratio of the display can be enhanced." EX-1001 at 8:4-7. Additionally, these regions allegedly reduce "directional viewing variation." *Id.* at 12:61-67, 14:8-11. Masuda's "non-display element" performs the same "dummy" function in the sense that it does not contribute to the image display and is intended to increase contrast and reduce directional viewing variation. EX-1003 at ¶¶ 54-55, 93, 106-107.

Masuda at Fig. 5 (non-display elements)	Inoue Pixel Pattern of Fig. 5 Modified to Incorporate Teachings of Masuda
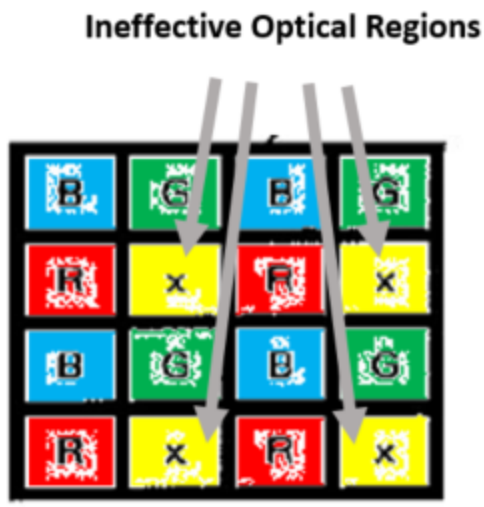	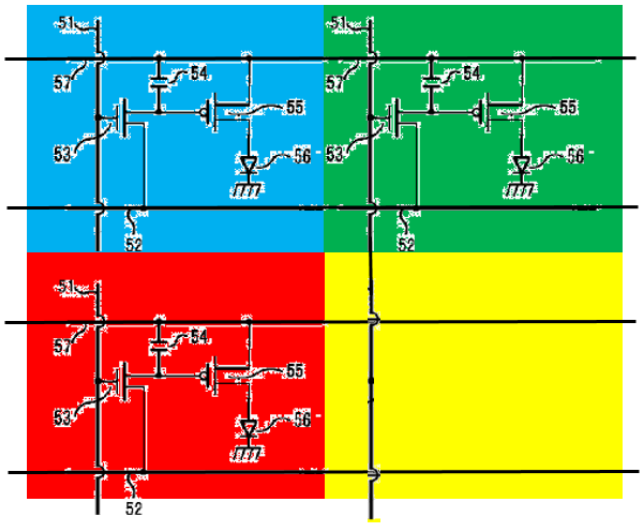

Because Masuda's "non-display element" does not contribute to the image display, a POSITA would have understood or found obvious that it has no electro-optical element. EX-1003 at ¶¶ 106-107; *see also supra* Ground 1, 3[e] (discussion of Masuda's disclosure of ineffective optical regions with no electro-optical elements).

Furthermore, during prosecution of the Japanese counterpart patent, the Applicant acknowledged that "an invention that is achieved through combining the driving method disclosed in [Inoue] with the layout of display elements described in [Masuda] would be no more than an invention wherein *a basic layout of two rows and two columns is formed through* three primary color display elements and *one element that does not contribute to an image display*, in an organic EL display

device of an active matrix display system." EX-1007 at 8. Applicant did not argue that the Inoue-Masuda combination fails to render obvious "ineffective regions" with no "electro-optical elements." *Id*.

For these reasons, the Inoue-Masuda combination renders obvious a plurality of ineffective optical regions provided above the substrate, no electro-optical elements being provided in the ineffective optical regions. EX-1003 at ¶¶ 106-107.

(f) 3[f] "each of the whole ineffective optical regions being arranged so as to be sandwiched by two of the first effective optical regions and so as to be sandwiched by two of the second effective optical regions."

The Inoue-Masuda combination renders obvious that "each of the whole"[12] "ineffective optical regions" are sandwiched by two of the first "effective optical regions" and sandwiched by two of the second "effective optical regions." Masuda discloses that a "two-row, two-column basic arrangement is formed from three primary color display elements and one element that does not contribute to the image display." EX-1009 at [0022]. This square pattern shape shows that the ineffective optical regions are sandwiched, for example, by the green and red pixels.

[12] The presence of dummy pixels located at the edges of the display does not undermine that Masuda discloses "each" of the ineffective optical regions are sandwiched. *See supra* Ground 1, 3[f] (addressing this issue in footnote).

'736 Patent at Fig. 2 (annotated)	**Masuda at Fig. 5** **Green: "First Effective Optical Regions"** **Red: "Second Effective Optical Regions"** **Yellow: "Ineffective Optical Regions"**
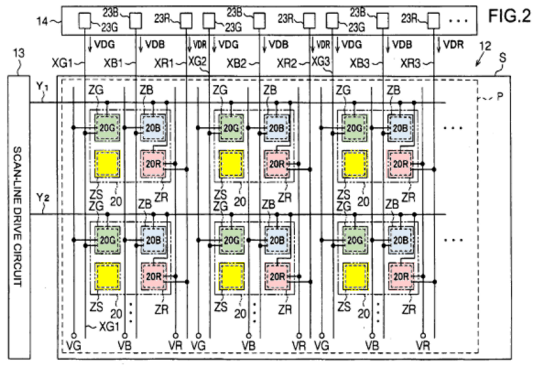	

See also supra Ground 1, 3[f] (discussion of Masuda's disclosure of sandwiched ineffective optical regions).

Furthermore, during prosecution of the Japanese counterpart patent, Applicant did not argue that the Inoue-Masuda combination fails to render obvious ineffective optical regions that are "interposed between" or "sandwiched by" effective optical regions. *See* EX-1007 at 7-8.

For these reasons, the Inoue-Masuda combination renders obvious each of the whole ineffective optical regions being arranged so as to be sandwiched by two of the first effective optical regions and so as to be sandwiched by two of the second effective optical regions. EX-1003 at ¶ 108.

5. Claim 4 "The electro-optical device according to claim 3, wherein the first effective optical regions are not adjacent to each other."

The Inoue-Masuda combination renders obvious that the first (e.g., green) "effective optical regions" are not adjacent to each other, as shown by Masuda's Figure 5 reproduced and discussed above with respect to claim 3. *See supra* Section IV.B.4, Ground 1, Claim 4; EX-1009 at Fig. 5; EX-1003 at ¶ 109.

6. Claim 5 "The electro-optical device according to claim 3, the first effective optical regions and the second effective optical regions having the same shape."

The Inoue-Masuda combination renders obvious the first (e.g., green) and second (e.g., red) "effective optical regions" having the same shape (a square), as shown by Masuda's Figure 5 reproduced and discussed above with respect to claim 3. *See supra* Section IV.B.4, Ground 1, Claim 5; EX-1009 at Fig. 5; EX-1003 at ¶ 110.

7. Claim 7 "The electro-optical device according to claim 3, the first and second effective optical regions having respective electronic circuits to drive the electro-optical elements provided in the first and second effective optical regions."

The Inoue-Masuda combination renders obvious "a pixel drive circuit used to cause pixels in an AM type organic EL panel of the prior art to emit light," as shown by figure 5 reproduced below. EX-1011 at [0006]; *see also id.* at [0024]-[0025], [0027]-[0028]; EX-1003 at ¶ 111. Inoue discloses a drive circuit that in-

cludes a "first transistor 53" that operates "as a switching element," a "second transistor 55" that operates "as a drive element," a "capacitor 54," and an "organic EL element serving as the light-emitting element 56." EX-1011 at [0006]. This circuit receives "scanning signals . . . from the first vertical scanning line 51" and "[i]mage signals . . . from the first horizontal scanning line 52." *Id.*

As shown by Inoue's figure 5 below, this electronic circuitry (transistors 53, 55, and capacitor 54) (annotated with a dark green outline) is provided in the same effective optical region that includes the electro-optical element (8) (bright green) driven by that circuitry. This circuitry is found at the intersection of the line that provides "scanning signals" (51) and the line that provides "image signals" (52), which corresponds to a particular pixel that includes an electro-optical element. *See* EX-1011 at [0006]; EX-1001 at 5:4-10 (disclosing "pixels that are provided so as to correspond to respective intersections of a plurality of scan lines and a plurality of data lines" and that "electronic circuits for the corresponding pixels may control light emission ... in accordance with" signals from those lines). Inoue's figure 5 depicts the circuitry that would correspond to a particular colored pixel of the four colored pixels shown by the '736 patent's figure 3.

Inoue at Fig. 5	’736 Patent at Fig. 3
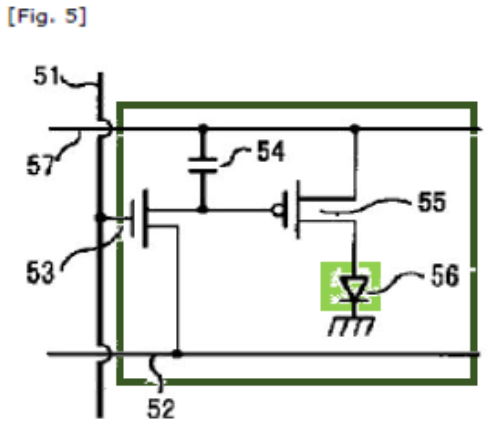	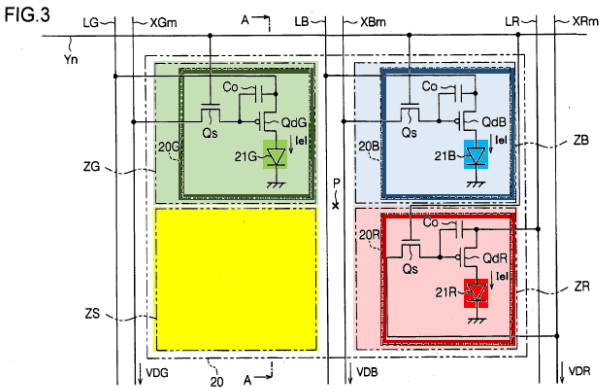

In addition to Inoue’s “prior art” figure 5, Inoue’s figure 1 confirms that Inoue discloses first and second effective optical regions having respective electronic circuits to drive the electro-optical elements provided in the first and second effective optical regions, as it depicts two circuits (annotated below in green and red boxes) driving their respective electro-optical elements (green and red filled-in boxes).

Inoue at Fig. 1	’736 Patent at Fig. 3
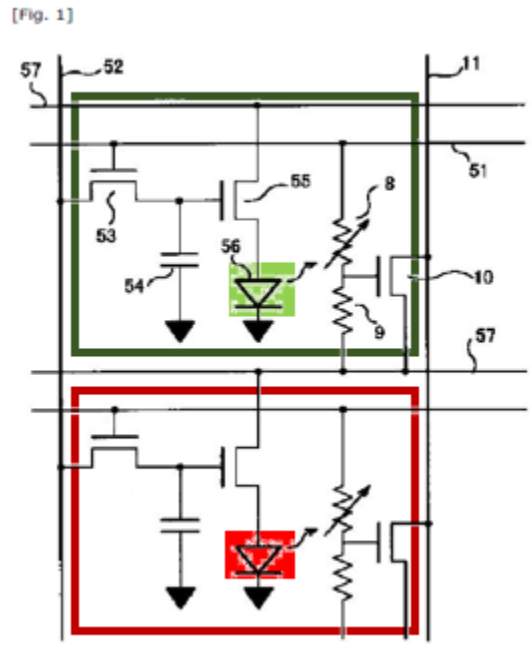	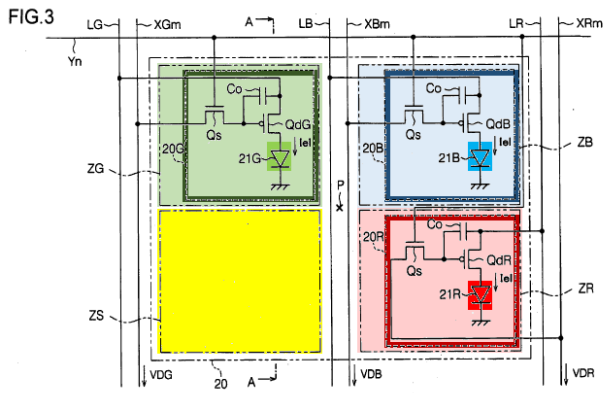

Placing electronic circuits that drive electro-optical elements in the effective optical region in which those elements are found would have further been obvious to a POSITA, in view of a POSITA’s general knowledge of active matrix type displays as of the Critical Date. EX-1003 at ¶ 112; EX-1001 at 1:9-22 (“The pixels [in active matrix drive systems] have respective pixel circuits, each of which is constituted by electro-optical elements and driving transistors for supplying drive power to the electro-optical elements.”). Any pixel must receive an electrical signal in order to emit light, and a circuit to deliver that signal. *See* EX-1003 at ¶ 112. In an “active matrix” type of display, each pixel has its own driving circuitry. *See id.* at ¶¶ 50-53, 112; *see also* EX-1014 at 11-12. It would have been obvious to a POSITA to locate that circuitry in the same region that includes the pixel it drives.

EX-1003 at ¶¶ 50-53, 112.

8. Claim 9 "An electro-optical device according to claim 7, further comprising: pixels provided so as to correspond to respective intersections of a plurality of scan lines and a plurality of data lines, the electronic circuits driving the electro-optical elements in accordance with scan signals from the scan lines and data signals from the data lines."

The Inoue-Masuda combination renders obvious pixels corresponding to intersections of scan lines and data lines and electronic circuits to drive electro-optical elements in accordance with signals from those lines. Inoue's electronic circuits receive both "scanning signals" from a "first vertical scanning line 51" and "[i]mage signals" from a "first horizontal scanning line 52."[13] EX-1011 at [0006], [0019]; EX-1003 at ¶¶ 113-114. When the circuit is in "light emitting mode" the "scanning line signal is applied to the gate terminal of the first transistor 53," which as discussed above, operates as a switching element and "an image signal is applied at a predetermined voltage" to that transistor's source terminal. EX-1011 at [0006]-[0007]; *see also id.* at [0022] ("When the first vertical scanning line 51 is

[13] Although line 51 is described as "vertical" and line 52 is described as "horizontal," Inoue's figures 3 and 5 show these lines in different orientations. Regardless, the characterization of these lines as "vertical" or "horizontal" is irrelevant for purposes of the present analysis. EX-1003 at ¶ 113.

activated, the voltage between the power supply line 57 and the first vertical scanning line 51 is applied to the light-detecting element 8 and the resistor 9. At the same time, a voltage corresponding to brightness data is applied to the first horizontal scanning line 52 and the light-emitting element 56 emits light.”).

Inoue’s “vertical scanning line 51” constitutes a scan line. In an active matrix display, scan lines are connected to the gate of a switching transistor to allow a particular pixel to receive data or not. *See* EX-1001 at 9:14-40; EX-1003 at ¶¶ 113-114. As discussed above, Inoue’s scanning line 21 performs this same function. Inoue at [0006]-[0007], [0022].

Inoue’s “horizontal scanning line 52” constitutes a data line. In an active matrix display, data lines are connected to another terminal of a switching transistor to provide a data signal that drives a pixel’s light emitting element to display light. *See* EX-1001 at 9:14-40; EX-1003 at ¶¶ 50-53, 113-114. As discussed above, Inoue’s scanning line 52 performs this same function by providing an “image signal.” Inoue at [0006]-[0007], [0022].

The table below annotates Inoue’s figure 5 and the ’736 patent’s figure 3 to show data lines in brown and scan lines in blue and how they connect to the pixel circuits. *See also* EX-1001 at 1:30-37 (identifying XGm, XBm, and XBr as data lines for green, blue, and red pixels); *id.* at 1:37-39 (identifying Yn as scan lines).

Inoue at Fig. 5	’736 Patent at Fig. 3
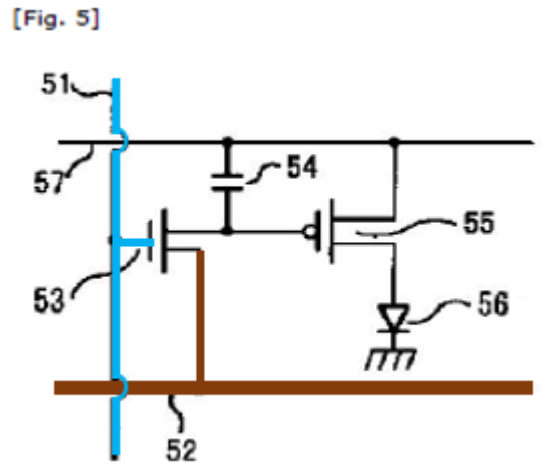	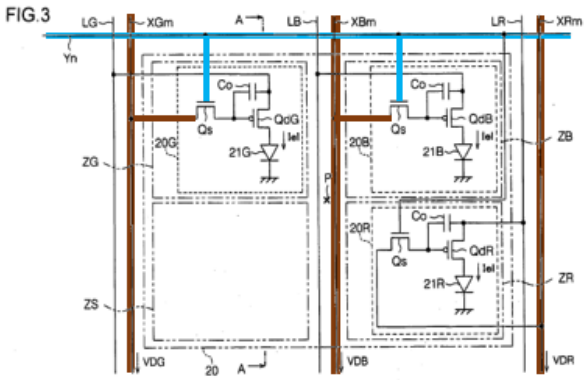

Pixels corresponding to the intersection of scan and data lines and driving those pixels in accordance with signals with those lines would have further been obvious to a POSITA, in view of a POSITA’s general knowledge of active matrix type displays as of the Critical Date. EX-1003 at ¶¶ 113-115; EX-1001 at 1:10-34 (referencing “data-line direction” and “scan-line direction” for prior art active-matrix drive system displays). As discussed above with respect to claim 7, pixels receive electrical signals from circuitry. *See* EX-1003 at ¶¶ 113-115. In an “active matrix” type of display, “scan” and “data” lines are responsible for controlling when to turn those pixels on to generate an image. *See id.* at ¶¶ 51, 113-115; *see also* EX-1014 at 11-12.

9. Claim 13 "The electro-optical device according to claim 3, the first electro-optical element and the second electro-optical element including two electro-optical elements selected from an electro-optical element that emits green, an electro-optical element that emits blue, and an electro-optical element that emits red."

As disclosed above with respect to the section discussing 3[c] and the section discussing 3[d], the Inoue-Masuda combination renders obvious first and second electro-optical elements. Masuda further discloses that these elements and these films can be green, blue, or red, as shown by Masuda's Figure 5 reproduced and discussed above with respect to claim 3. *See supra* Section IV.B.4, Ground 1, Claim 13; EX-1009 at Fig. 5; EX-1003 at ¶ 116.

10. Claim 14 "The electro-optical device according to claim 3, each of the first electro-optical elements and the second electro-optical elements being an electroluminescent element."

The Inoue-Masuda combination renders obvious that the first and second electro-optical elements are electroluminescent elements, as discussed above. *See, e.g.*, Inoue at [0002], [0004]-[0006], [0018] (referencing "organic EL display panels"). "EL" is an abbreviation for "electroluminescent." *See* EX-1001 at 1:11-13; EX-1003 at ¶ 117.

11. Claim 15 "The electro-optical device according to claim 14, the electroluminescent element having a light-emitting layer that includes organic material."

The Inoue-Masuda combination renders obvious that the first and second electro-optical electroluminescent elements have a light-emitting layer. *See, e.g.*,

Inoue at [0002], [0004]-[0006], [0018] (referencing "organic EL display panels"). An organic EL element is one that has organic material. *See* EX-1003 at ¶ 117; EX-1001 at 2:3-5.

12. Claim 16 "The electro-optical device according to claim 3, wherein the second effective optical regions are not arranged so as to be adjacent to each other."

The Inoue-Masuda combination renders obvious that the second (e.g., red) "effective optical regions" are not adjacent to each other, as shown by Masuda's Figure 5 reproduced and discussed above with respect to claim 3. *See supra* Section IV.B.4, Ground 1, Claim 16; EX-1009 at Fig. 5; EX-1003 at ¶ 109.

13. Claim 17 "The electro-optical device according to claim 3, each of the first effective optical regions in which the first electro-optical elements are provided being arranged at regular intervals in a column and row directions of a display area."

The Inoue-Masuda combination renders obvious that the first (e.g., green) "effective optical regions" are provided at regular intervals in column and row directions, as shown by Masuda's Figure 5 reproduced and discussed above with respect to claim 3. *See supra* Section IV.B.4, Ground 1, Claim 17; EX-1009 at Fig. 5; EX-1003 at ¶ 118. The '736 patent describes green, blue, red, and dummy regions being "formed in a matrix" such that any given "region is provided between two same-color forming regions," as involving "regular intervals in the vertical and horizontal directions." EX-1001 at 14:1-11. Masuda's effective optical regions

are also arranged at regular intervals in column and row directions because they repeat in a pattern such that the effective optical region are evenly spaced from each other. *See* EX-1009 at [0106] (referencing "fluorescent materials . . . arranged in a pattern"); *id.* at Fig. 5 (showing green pixels that appear at every other position in both the horizontal and vertical directions).

V. DISCRETIONARY CONSIDERATIONS

The *Fintiv* factors strongly favor institution.

1. No evidence regarding a stay

No motion to stay has been filed, so the Board should not infer the outcome and this factor is neutral.

2. Parallel proceeding trial date

The expected date for an Institution Decision is in August 2023 and the expected date for a Final Written Decision is in August 2024, within a few months of trial. As of this petition, the operative docket control order sets jury selection to begin on May 20, 2024. EX-1016.

Trial will likely be significantly delayed from that date. The median time from filing to trial in the Eastern District of Texas is ordinarily 24.5 months, and that estimate applied to this case would suggest trial to take place in April 2024 since the Patent Owner filed the complaint on April 18, 2022. *See* EX-1015;

https://www.uscourts.gov/sites/default/files/fcms_na_distprofile0630.2022_0.pdf at 35.

Here, however, the Patent Owner did not *serve* the complaint on Petitioner until about five months later, on September 27, 2022. The normal deadlines in the case have had concomitant delays. For example, this case's docket control order, which sets various case deadlines, did not issue until February 3, 2023—about ten months after the answer was filed. *See* EX-1016. With Patent Owner's delay in service of the complaint causing significant delay in the schedule, the median time to trial should be judged from the date of complaint service (e.g., when the case actually started), instead of the date of complaint filing. Using the service date, the median time to trial would place trial in October 2024, after the expected Final Written Decision deadline. Thus, Factor 2 weighs in favor of institution.

3. Investment in parallel proceeding

The co-pending litigation is in its early stages, and investment has been minimal. Claim construction has not occurred; fact discovery will not close until December 1, 2023; expert discovery has not begun and will not close until February 5, 2024. EX-1016. Thus, Factor 3 weighs in favor of institution.

4. Overlapping issues

If the Board institutes trial, Petitioner will cease asserting in the district court any invalidity contention based on the prior art presented in this petition that constitutes part of a ground. Institution will not result in overlapping consideration of invalidity arguments, thereby favoring institution.

5. Petitioner status

Petitioner is a defendant, but that is true of most Petitioners and this factor should not be a basis for denying institution.

6. Other circumstances

The merits of Petitioner's arguments are strong. Indeed, the JPO, an independent authority, already found similar claims to be unpatentable over the applied Masuda and Inoue prior art references, which were not considered by the US Examiner. Patent Owner was only able to overcome these references during prosecution before the JPO by amending the Japanese claims to include features that are absent from the Challenged Claims. Thus, claims similar to the Challenged Claims have already been found unpatentable over the same prior art advanced in this petition. With that history, and the indisputable similarity between the circuits of Masuda and Inoue and the circuit claimed in the '736 patent, the present petition presents a compelling case of invalidity that supports institution, regardless of the status of the parallel proceeding. Thus, the *Fintiv* factors favor institution.

VI. FEES

Petitioner authorizes charge of Deposit Account No. 06-1050 any fees.

VII. MANDATORY NOTICES UNDER 37 C.F.R § 42.8(a)(1)

A. Real Party-In-Interest Under 37 C.F.R. § 42.8(b)(1)

BOE Technology Group Co., Ltd., Beijing BOE Display Technology Co., Ltd., and Motorola (Wuhan) Mobility Technologies Communication Co., Ltd. are the real parties-in-interest.

B. Related Matters Under 37 C.F.R. § 42.8(b)(2)

Petitioners are not aware of any disclaimers, reexamination certificates or petitions for *inter partes* review for the '736 Patent. The '736 patent is the subject of the following civil action: *Element Capital Commercial Company PTE. Ltd., v. BOE Technology Group Co., et al*, 2:22-cv-00118-JRG (E.D. Tex.).

C. Lead And Back-Up Counsel Under 37 C.F.R. § 42.8(b)(3)

BOE provides the following designation of counsel.

Lead Counsel	Backup counsel
Jeremy J. Monaldo, Reg. No. 58,680 Fish & Richardson P.C. 60 South Sixth Street Suite 3200 Minneapolis, MN 55402 Tel: 202-783-5070 Fax: 877-769-7945 IPR54108-0001IP1@fr.com	Joseph Colaianni, Reg. No. 39,948 Linhong Zhang, Reg. No. 64,749 Fish & Richardson P.C. 60 South Sixth Street Suite 3200 Minneapolis, MN 55402 Tel: 202-783-5070 Fax: 877-769-7945 PTABInbound@fr.com

D. Service Information

Please address correspondence/service to the above-listed address. Petitioner consents to email service at IPR54108-0001IP1@fr.com (referencing No. 54108-0001IP1 and cc'ing PTABInbound@fr.com.

Respectfully submitted,

Dated February 22, 2023

/Jeremy J. Monaldo/

Jeremy J. Monaldo, Reg. No. 58,680
Joseph Colaianni, Reg. No. 39,948
Linhong Zhang, Reg. No. 64,749

Fish & Richardson P.C.
60 South Sixth Street, Suite 3200
Minneapolis, MN 55402
T: 202-783-5070
F: 877-769-7945

(Control No. IPR2023-00605)

Attorneys for Petitioner

CERTIFICATION UNDER 37 CFR § 42.24

Under the provisions of 37 CFR § 42.24(d), the undersigned hereby certifies that the word count for the foregoing Petition for *Inter partes* Review totals 13,840 words, which is less than the 14,000 allowed under 37 CFR § 42.24.

Dated February 22, 2023

/Jeremy J. Monaldo/

Jeremy J. Monaldo, Reg. No. 58,680
Joseph Colaianni, Reg. No. 39,948
Linhong Zhang, Reg. No. 64,749

Fish & Richardson P.C.
60 South Sixth Street, Suite 3200
Minneapolis, MN 55402
T: 202-783-5070
F: 877-769-7945

Attorneys for Petitioner

CERTIFICATE OF SERVICE

Pursuant to 37 CFR §§ 42.6(e)(4)(i) *et seq.* and 42.105(b), the undersigned certifies that on February 22, 2023, a complete and entire copy of this Petition for *Inter partes* Review and all supporting exhibits were provided via Federal Express, to the Patent Owner, by serving the correspondence address of record as follows:

Wei Te Chung
1079 Lancer Drive
San Jose, CA 95129

/Kristyn Waldhauser/
Kristyn Waldhauser
Fish & Richardson P.C.
60 South Sixth Street, Suite 3200
Minneapolis, MN 55402
(612) 638-5731