Trials@uspto.gov
571-272-7822

Paper 9
Entered: October 12, 2023

UNITED STATES PATENT AND TRADEMARK OFFICE

BEFORE THE PATENT TRIAL AND APPEAL BOARD

BOE TECHNOLOGY GROUP CO., LTD., BEIJING BOE DISPLAY TECHNOLOGY CO., and MOTOROLA (WUHAN) MOBILITY TECHNOLOGIES COMMUNICATION CO., LTD.,

Petitioner,

v.

ELEMENT CAPITAL COMMERCIAL COMPANY PTE. LTD,
Patent Owner.

IPR2023-00605
Patent 7,259,736 B2

Before DAVID C. McKONE, TERRENCE W. McMILLIN, and RUSSELL E. CASS, *Administrative Patent Judges.*

CASS, *Administrative Patent Judge*.

DECISION
Denying Institution of *Inter Partes* Review
35 U.S.C. § 314

I. INTRODUCTION

A. Background

BOE Technology Group Co., Ltd., Beijing BOE Display Technology Co., and Motorola (Wuhan) Mobility Technologies Communication Co., Ltd. (collectively, "Petitioner") filed a Petition requesting an *inter partes* review of claims 3–5, 7, 9, and 13–17 (the "challenged claims") of U.S. Patent No. 7,259,736 B2 (Ex. 1001, "the '736 patent"). Paper 4, 1 ("Pet."). Element Capital Commercial Company PTE. LTD ("Patent Owner") filed a Preliminary Response. Paper 8 ("Prelim. Resp.").

An *inter partes* review may not be instituted unless it is determined that "the information presented in the petition filed under section 311 and any response filed under section 313 shows that there is a reasonable likelihood that the petitioner would prevail with respect to at least 1 of the claims challenged in the petition." 35 U.S.C. § 314 (2018); *see also* 37 C.F.R § 42.4(a) (2021) ("The Board institutes the trial on behalf of the Director."). The reasonable likelihood standard is "a higher standard than mere notice pleading," but "lower than the 'preponderance' standard to prevail in a final written decision." *Hulu, LLC v. Sound View Innovations, LLC*, IPR2018-01039, Paper 29 at 13 (PTAB Dec. 20, 2019) (precedential).

For the reasons provided below and based on the record before us, we determine that Petitioner has not demonstrated a reasonable likelihood that it would prevail in showing the unpatentability of at least one of the challenged claims. Accordingly, we do not institute an *inter partes* review based on the Petition.

B. Real Parties in Interest

Petitioner states that the real parties in interest are BOE Technology Group Co., Ltd., Beijing BOE Display Technology Co., and Motorola (Wuhan) Mobility Technologies Communication Co., Ltd. Pet. 1, 78. Patent Owner states that Element Capital Commercial Company PTE. LTD is the real party in interest. Paper 5, 1.

C. Related Proceedings

The parties state that the ’736 patent was asserted in *Element Capital Commercial Company PTE. LTD, v. BOE Technology Group Co.*, 2:22-cv-00118-JRG (E.D. Tex.). Pet. 78; Paper 5, 1.

D. The ’736 Patent (Ex. 1001)

The ’736 patent is directed to “an electro-optical device and an electronic apparatus which reduce directional viewing variation that occurs between the column and row directions” and “provide an active matrix substrate suitable for the electro-optical device.” Ex. 1001, code (57). As background, the ’736 patent Specification explains that “[o]ne type of driving system for a related art display having liquid-crystal elements, organic EL (electroluminescent) elements, electrophoresis elements, electronic emitting elements, or the like is an active matrix drive system.” *Id.* at 1:11–14. “An active-matrix drive system,” the Specification continues, “includes a display panel that has a plurality of pixels in a matrix,” with the pixels having “respective pixel circuits, each of which is constituted by electro-optical elements and driving transistors for supplying drive power to the electro-optical elements.” *Id.* at 1:14–19. According to the Specification, “[t]he pixel circuits are arranged so as to correspond to respective intersections of data lines and scan lines.” *Id.* at 1:19–21.

The Specification further explains that, "[w]hen the pixel circuits have different shapes and/or different pitches in the column direction (data-line direction) and the row direction (scan-line direction) of the display panel portion, directional viewing variation occurs between the column direction and the row direction of the display panel." Ex. 1001, 1:23–28. "As a result," according to the Specification, "an image displayed on the display panel portion may be distorted in the column direction (data-line direction) or the row direction (scan-line direction)" which, for a "full-color display," may cause "color irregularities in addition to distortion of the image in the column and row directions," reducing the display quality. *Id.* at 1:28–34.

To overcome this problem, the Specification discloses an electro-optical device that "includes a plurality of effective optical regions that are provided above a substrate and that have electro-optical elements." Ex. 1001, 1:43–47. In the device, "[a]t least three effective optical regions are in contact with ineffective-optical regions" that lack electro-optical elements. *Id.* at 1:48–50. The effective optical regions may be "arranged so as to sandwich the ineffective optical regions," reducing the "directional viewing variation that occurs between the column direction and the row direction of the display panel," making it possible "to reduce distortion of an image." *Id.* at 1:58–62.

A circuit block schematic of an embodiment of the '736 patent is shown in Figure 1, reproduced below.

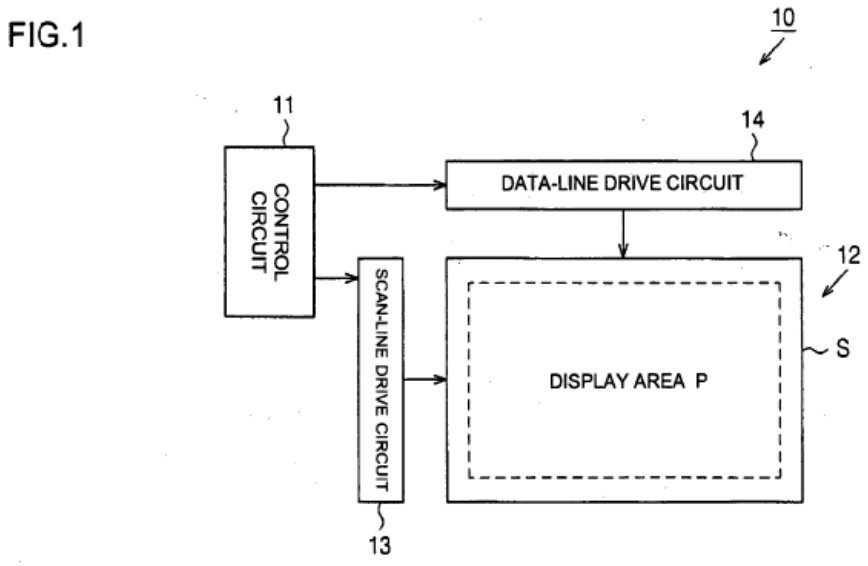

Figure 1 shows a circuit block schematic of an embodiment of the invention of the '736 patent. Ex. 1001, 7:6–9; Ex. 2004, Fig. 1.[1]

As shown in Figure 1, a display 10 includes a control circuit 11, a display panel portion 12, a scan-line drive circuit 13, and a data-line drive circuit 14. Ex. 1001, 7:13–15. Display panel portion 12 has display area P, with a plurality of pixel circuits formed on active matrix substrate S. *Id.* at 7:26–28.

A circuit block schematic illustrating the internal circuit configuration of the display panel portion and data-line drive circuit is shown in Figure 2, reproduced below.

[1] The '736 patent was issued with incorrect figures, which was corrected by a Certificate of Correction (Ex. 2004). In this Decision, we will cite to the Figures in the Certificate of Correction.

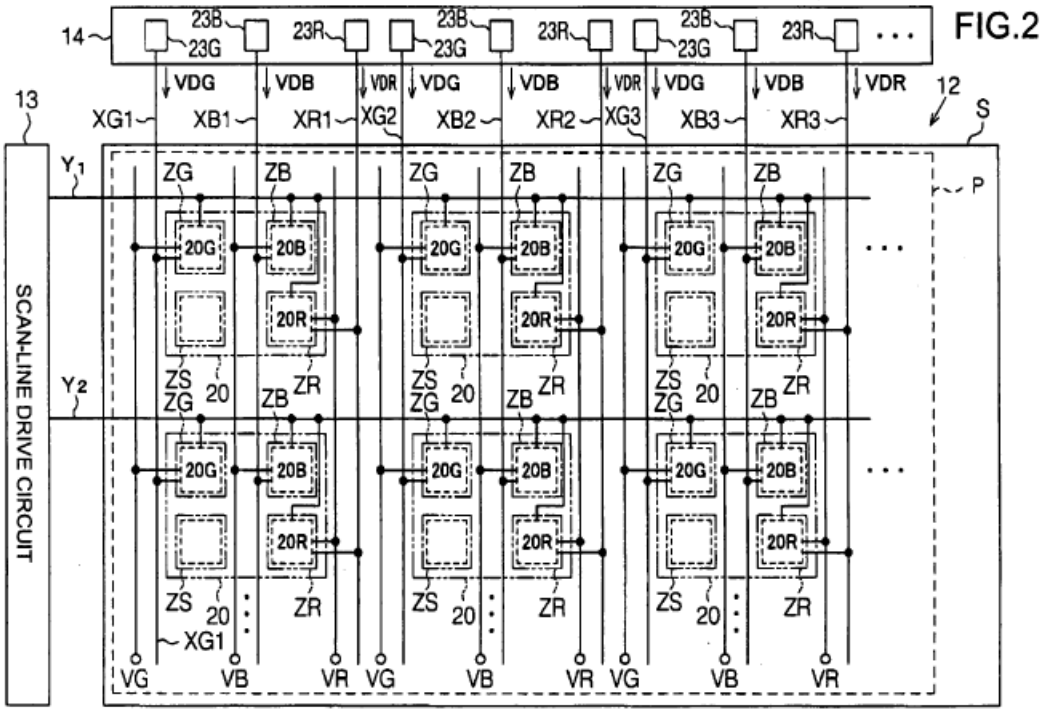

Figure 2 is a circuit block schematic illustrating the internal circuit configuration of the display panel portion and data-line drive circuit of the ’736 patent. Ex. 1001, 7:9–11; Ex. 2004, Fig. 2.

As shown in Figure 2, “a plurality of pixel circuits 20 are arranged and formed on an active substrate S.” Ex. 1001, 7:26–28. Data-line drive circuit 14 drives data lines “arranged so as to extend in the column direction” and “are constituted by data lines XGm for green, data lines XBm for blue, and data lines XRm for red,” with m being a natural number. *Id.* at 7:28–32. Scan-line drive circuit 13 drives a “plurality of scan lines Yn,” with n being a natural number, “arranged so as to extend in the row direction of the display panel portion 12.” *Id.* at 7:37–39. Pixel circuits 20 “are arranged and formed in a matrix at positions corresponding to the respective intersections of the scan lines Yn and the green, blue, and red data lines XGm, XBm, and XRm.” *Id.* at 7:40–43. Each pixel circuit 20 includes a green pixel circuit 20G, a blue pixel circuit 20B, and a red pixel circuit 20R,

which together make up one pixel. *Id.* at 7:44–57. Each pixel circuit 20 also includes a dummy forming region ZS that does not include any of the pixel circuits 20G, 20B, and 20R. *Id.* at 8:1–2.

A circuit schematic of a pixel circuit of the ’736 patent is illustrated in Figure 3, reproduced below.

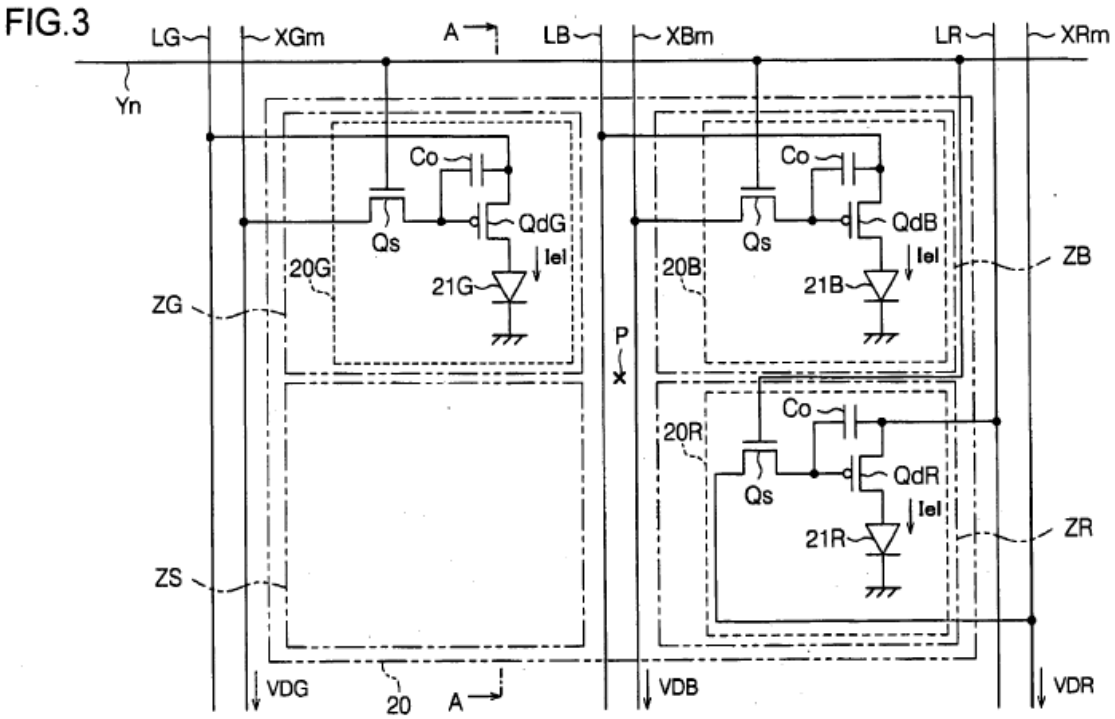

Figure 3 is a circuit schematic illustrating a pixel circuit of the ’736 patent. Ex. 1001, 7:11–12; Ex. 2004, Fig. 3.

As shown in Figure 3, “in a region where each pixel circuit 20 is formed, a pixel forming region ZG for green, a pixel forming region ZB for blue, a pixel forming region ZR for red, and a dummy forming region ZS are provided in a square lattice.” Ex. 1001, 7:58–62. Each of the green, blue, and red forming regions includes an organic EL (electroluminescent) element that emits light in the appropriate color for that region. *Id.* at 7:61–8:1. The dummy forming region ZS includes “an anti-reflection member made of black polyimide or the like,” which “ensure[s] that black is

displayed on the display panel portion 12" and enhances "the contrast ratio of the display 10." *Id.* at 8:1–8.

As shown in Figure 2, except for the pixel circuits 20 located at the top, bottom, left, and right edges, dummy forming regions ZS are sandwiched by green pixel forming regions ZG in the vertical direction, and are sandwiched by red pixel forming regions ZR in the horizontal direction. Ex. 1001, 8:29–35. Thus, "the green, blue and red organic EL elements 21G, 21B, and 21R can be arranged in regular directions and at regular intervals in the column and row directions of the display panel portion 12," which "can reduce directional viewing variation that occurs between the column direction and the row direction of the display panel portion 12," and "makes it possible to suppress the distortion of an image displayed on the display panel portion 12." *Id.* at 8:39–46.

E. Illustrative Claims

Of originally challenged claims 3–5, 7, 9, and 13–17, claim 3 is independent. Patent Owner has disclaimed claims 3–5, 13, 16, and 17. Prelim. Resp. 18. Independent claim 3, along with remaining claims 7, 9, 14, and 15 are reproduced below.

> 3. [a] An electro-optical device comprising:
>
> [b] a substrate;
>
> [c] a plurality of first effective optical regions provided above the substrate, first electro-optical elements being provided in the first effective optical regions;
>
> [d] a plurality of second effective optical regions provide above the substrate, second electro-optical elements being provided in the second effective optical regions; and
>
> [e] a plurality of ineffective optical regions provided above the substrate, no electro-optical elements being provided in the ineffective optical regions,

> [f] each of the whole ineffective optical regions being arranged so as to be sandwiched by two of the first effective optical regions and so as to be sandwiched by two of the second effective optical regions.
>
> 7. The electro-optical device according to claim 3, the first and second effective optical regions having respective electronic circuits to drive the electro-optical elements provided in the first and second effective optical regions.
>
> 9. An electro-optical device according to claim 7, further comprising: pixels provided so as to correspond to respective intersections of a plurality of scan lines and a plurality of data lines, the electronic circuits driving the electro-optical elements in accordance with scan signals from the scan lines and data signals from the data lines.
>
> 14. The electro-optical device according to claim 3, each of the first electro-optical elements and the second electro-optical elements being an electroluminescent element.
>
> 15. The electro-optical device according to claim 14, the electroluminescent element having a light-emitting layer that includes organic material.

Ex. 1001, 17:12–27, 17:36–39, 17:46–52, 18:14–19 (indents and bracketed paragraph identifiers added).

F. Applied References

Petitioner relies upon the following references:

Masuda, JPH11185654A, published July 9, 1999 (Ex. 1008);

Certified Translation of Masuda (Ex. 1009, "Masuda");

Inoue, JP2002-278504A, published September 27, 2002 (Ex. 1010);

Certified Translation of Inoue (Ex. 1011, "Inoue").

Pet. iii, 2. Petitioner submits the Declaration of Dr. David K. Liu. (Ex. 1003). Patent Owner submits the Declaration of Dr. Aris Silzars (Ex. 2002).

G. Asserted Grounds of Unpatentability

Petitioner challenges the patentability of claims 3–5, 7, 9, and 13–17 of the ’736 patent based on the following grounds:

Claim(s) Challenged	35 U.S.C. §	Reference(s)/Basis
3–5, 13, 16, 17	102/103(a)	Masuda
3–5, 7, 9, 13–17	103(a)	Masuda, Inoue

Pet. 1. As noted above, Patent Owner has disclaimed claims 3–5, 13, 16, and 17. Prelim. Resp. 18. Accordingly, only the alleged obviousness of claims 7, 9, 14, and 15, based on a combination of Masuda and Inoue, remains at issue.

II. DISCUSSION

A. Claim Construction

A claim “shall be construed using the same claim construction standard that would be used to construe the claim in a civil action under 35 U.S.C. § 282(b).” 37 C.F.R. § 42.100(b).

Petitioner proposes that no formal claim constructions are necessary in this proceeding. Pet. 19. Patent Owner does not propose any express claim constructions. *See* Prelim. Resp.

We determine that it is not necessary to construe any claim terms for purposes of this Decision. *See Realtime Data, LLC v. Iancu*, 912 F.3d 1368, 1374 (Fed. Cir. 2019) (“The Board is required to construe ‘only those terms . . . that are in controversy, and only to the extent necessary to resolve the controversy.’”) (quoting *Vivid Techs., Inc. v. Am. Sci. & Eng’g, Inc.*, 200 F.3d 795, 803 (Fed. Cir. 1999)).

B. Principles of Law

A claim is unpatentable under 35 U.S.C. § 103 if "the differences between the subject matter sought to be patented and the prior art are such that the subject matter as a whole would have been obvious at the time the invention was made to a person having ordinary skill in the art to which said subject matter pertains." *KSR Int'l Co. v. Teleflex Inc.*, 550 U.S. 398, 406 (2007). The question of obviousness is resolved on the basis of underlying factual determinations, including (1) the scope and content of the prior art; (2) any differences between the claimed subject matter and the prior art; (3) the level of skill in the art; and (4) where in evidence, objective evidence of non-obviousness.[2] *Graham v. John Deere Co. of Kansas City*, 383 U.S. 1, 17–18 (1966). When evaluating a combination of teachings, we must also "determine whether there was an apparent reason to combine the known elements in the fashion claimed by the patent at issue." *KSR*, 550 U.S. at 418 (citing *In re Kahn*, 441 F.3d 977, 988 (Fed. Cir. 2006)). Whether a combination of prior art elements would have produced a predictable result weighs in the ultimate determination of obviousness. *Id.* at 416–17.

In an *inter partes* review, the petitioner must show with particularity why each challenged claim is unpatentable. *Harmonic Inc. v. Avid Tech., Inc.*, 815 F.3d 1356, 1363 (Fed. Cir. 2016); 37 C.F.R. § 42.104(b) (2020). The burden of persuasion never shifts to Patent Owner. *Dynamic Drinkware, LLC v. Nat'l Graphics, Inc.*, 800 F.3d 1375, 1378 (Fed. Cir. 2015).

We analyze the challenges presented in the Petition in accordance with the above-stated principles.

---

[2] Patent Owner has not presented objective evidence of non-obviousness.

C. Level of Ordinary Skill in the Art

Both parties agree that a person of ordinary skill in the art at the time of the alleged invention would have had "at least a Master's degree in electrical engineering, physics, or a related field." Pet. 2 (citing Ex. 1003 ¶¶ 26–27); Prelim. Resp. 18 (citing Ex. 2002 ¶ 14). The parties, however, disagree about the work experience one of ordinary skill would have had. Petitioner asserts that one of ordinary skill would have had "at least two years of relevant work experience in the field of integrated circuit design and manufacturing." Pet. 2 (citing Ex. 1003 ¶¶ 26–27). Patent Owner contends that one of ordinary skill would have had "at least two years of relevant work experience in the field of display device technology." Prelim. Resp. 18 (citing Ex. 2002 ¶ 14). Both parties agree that "[a]dditional education can remedy lack of work experience and vice versa." Pet. 2; Prelim. Resp. 18.

We note that the '736 patent and challenged claims concern both display device technology and integrated circuit design for display devices. The '736 patent and challenged claims do not appear to concern integrated circuit manufacturing processes. Accordingly, for purposes of this Decision, and based on the present record, we determine that a person of ordinary skill in the art would have had a Master's degree in electrical engineering, physics, or a related field and at least two years of relevant work experience in the field of integrated circuit design for display devices. However, our decision in this proceeding would not change if we adopted either Petitioner's or Patent Owner's definition of the person of ordinary skill.

D. Ground 1A:[3] Asserted Anticipation or Obviousness of Claims 3–5, 13, 16, and 17 over Masuda

Petitioner contends that claims 3–5, 13, 16, and 17 are anticipated by or would have been obvious over Masuda. Pet. 1. Patent Owner has disclaimed all of the claims asserted in this Ground, and argues that, for this reason, Ground 1A is moot. Prelim. Resp. 18. We agree that Ground 1A is moot due to Patent Owner's disclaimer, and therefore need not consider the anticipation of claims 3–5, 13, 16, and 17 as part of this Decision.

E. Ground 1B: Asserted Obviousness of Claims 3–5, 7, 9, and 13–17 over Masuda in view of Inoue.

Petitioner contends that claims 3–5, 7, 9, and 13–17 would have been obvious over Masuda in view of Inoue. Pet. 1. Patent Owner has disclaimed claims 3–5, 13, 16, and 17. Therefore, we need not consider the obviousness of those claims as part of this Decision. Prelim. Resp. 18. Accordingly, we turn to Petitioner's obviousness challenges to remaining claims 7, 9, 14, and 15.

1. Overview of Masuda (Ex. 1009)

Masuda is directed to "a display panel for producing a color display using primary color display elements that are arranged in a matrix, and to an image displaying device equipped with said display panel." Ex. 1009 ¶ 1. Masuda teaches that conventional displays have included "three fluorescent materials for R, G, and B lined up in the horizontal direction to form a single pixel," as shown in Figure 3(a), reproduced below.

[3] Here, and elsewhere in the Decision, the identification of the grounds using designations such as "Ground 1A" and "Ground 1B" refers to the designation of the grounds as presented in the Petition.

[FIG. 3]

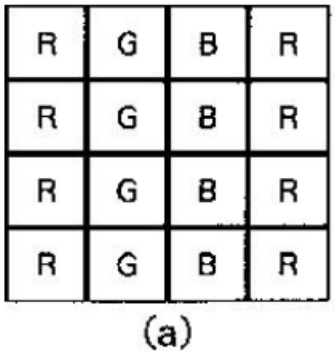

Figure 3(a) of Masuda shows a conventional display with fluorescent materials for red (R), green (G), and blue (B) lined up in the horizontal direction to form a single pixel. Ex. 1009 ¶¶ 17, 118, Fig. 3(a).

However, if, "in the stripe arrangement, the fluorescent materials are in shapes that are approximately square," then "the pixel that combines the R, G, and B will be long in the horizontal direction, reducing the resolution" in that direction. *Id.* ¶ 17. "Moreover," Masuda explains, "because fluorescent materials of identical colors will be lined up in the vertical direction, there is a shortcoming in that vertical stripes will be visible when an image is displayed." *Id.*

According to Masuda, one way to deal with this issue is to use a "checkerboard" arrangement to improve resolution by having each pixel include two horizontal elements and two vertical elements, as shown in Figure 3(b), reproduced below.

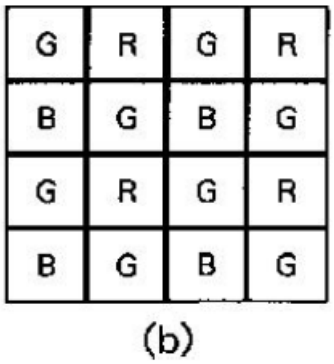

Masuda's Figure 3(b) shows a checkerboard arrangement with each pixel including two horizontal elements and two vertical elements. Ex. 1009 ¶¶ 18, 118, Fig. 3(b).

In Figure 3(b), each pixel has "two elements assigned to green (G), and one element each assigned to red (R) and blue (B)." Ex. 1009 ¶ 18. However, Masuda explains, this arrangement is disadvantageous because "the red and blue display elements are lined up in one row of two rows in the horizontal direction or in one column of two columns in the vertical direction," so "to the viewer red horizontal lines and blue horizontal lines will appear alternatingly or red vertical lines [and] blue vertical lines will appear alternatingly, causing a reduction in image quality." *Id.* ¶ 19. "Furthermore," according to Masuda, "the green outputs of the two elements are each limited to half" in order to "achieve a color balance," and thus "the elements cannot produce their maximum performance." *Id.* ¶ 20.

Masuda overcomes this problem by providing a display panel "where a two-row, two-column basic arrangement is formed from three primary color display elements and one element that does not contribute to the image display." Ex. 1009 ¶ 22. Two embodiments of this approach are shown in Masuda's Figures 1 and 2, reproduced below.

[FIG. 1]

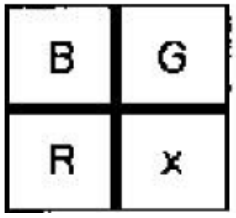

[FIG. 2]

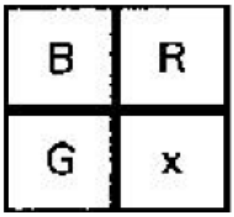

Masuda's Figures 1 and 2 show two embodiments in which a pixel includes three primary color display elements (B, G, and R) and one non-display element (x). Ex. 1009 ¶¶ 29, 118, Figs. 1, 2.

A plan view illustrating the arrangement according to Figure 1 is shown in Figure 5, reproduced below.

[FIG. 5]

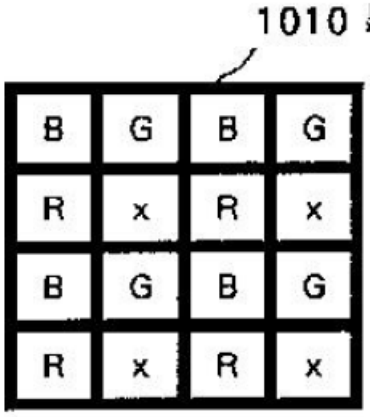

1010: Black Conductive Material
R: Red Fluorescent Body
G: Green Fluorescent Body
B: Blue Fluorescent Body
x: Non-Display Element

Figure 5 of Masuda shows a plan view according to the embodiment of Figure 1. Ex. 1009 ¶¶ 36, 118, Fig. 5.

According to Masuda, this design "improves the image quality by reducing the visual interference caused by horizontal stripes due to luminosity differences, by reducing the difference in luminosity between columns or difference in luminosity between rows in a two-row, two-column basic arrangement." *Id.* ¶ 21.

2. Overview of Inoue (Ex. 1011)

Inoue is directed to "a spontaneous light-emitting display device provided with a light emitting element matrix," which "suppress[es] brightness variation in the display." Ex. 1011 ¶ 1. As background, Inoue explains that organic EL displays "can be classified [as] passive matrix type (PM type) and active matrix type (AM type) depending on the drive method used." *Id.* ¶ 2. Inoue states that active matrix displays provide a thin film transistor (TFT) drive circuit in each pixel intended to "reduce variations in brightness and power consumption." *Id.* ¶ 4. However, according to Inoue, in active matrix systems "it is hard to create a driving element with a uniform characteristic over the entire organic EL panel region" and, as a result, "the current value flowing to each pixel is different and the brightness varies." *Id.* ¶ 5.

Inoue addresses this problem by using "a plurality of light-emitting elements arranged in a matrix and light-detecting elements receiving light emitted from each of the light-emitting elements" in which "the amount of light emitted from the light-emitting elements is controlled by signals from the light detecting elements." Ex. 1011 ¶¶ 11, 22–26. These light-detecting elements are provided in the circuitry for each pixel. *Id.* ¶¶ 19, 27, Fig. 1, Fig. 4.

3. Obviousness of the Inoue-Masuda Combination

The key dispute between the parties at this stage of the proceeding is whether it would have been obvious to combine Inoue with Masuda as Petitioner proposes. *See* Pet. 46–55; Prelim. Resp. 19–51. We will discuss each party's contentions below, followed by our analysis.

a) Petitioner's Contentions

Petitioner argues that, "[i]n the combination of Inoue and Masuda, Inoue's organic EL elements and their respective driving circuitry (a pixel) are arranged in the pattern taught by Masuda that includes three color pixel elements and one non-display element." Pet. 46. Inoue's display device, Petitioner asserts, includes "a portion [24] in which a large number of pixels including the light-emitting element 56 . . . are formed in a matrix." *Id.* (citing Ex. 1011 ¶¶ 23–24) (alterations in original). "When implemented using an active-matrix array," Petitioner contends, "each pixel includes a 'drive circuit' as well as an 'organic EL element.'" *Id.* (citing Ex. 1011 ¶¶ 4–6; Ex. 1003 ¶ 77).

According to Petitioner, one of ordinary skill "would have recognized that Masuda's pixel pattern could be implemented in Inoue's display by arranging Inoue's blue, green, and red pixels (i.e., organic EL elements and their corresponding drive circuit)" and "simply omitting any EL element in the fourth spot of the pixel pattern." Pet. 47 (citing Ex. 1003 ¶¶ 78–83). Petitioner illustrates its argument with an annotated version of Masuda's Figure 5 and a figure showing how Petitioner would modify Inoue's pixel pattern of Figure 5 to incorporate teachings of Masuda, reproduced below.

Masuda at Fig. 5 (pattern with non-display elements)	Inoue Pixel Pattern of Fig. 5 Modified to Incorporate Teachings of Masuda
	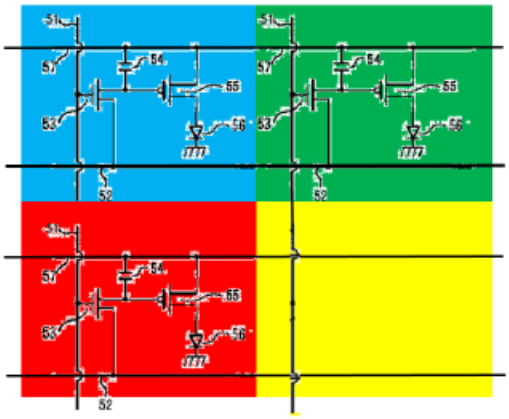

Petitioner's annotated version of Masuda's Figure 5 (left) and Petitioner's figure showing how it would modify Inoue's pixel pattern to incorporate teachings of Masuda (right). Pet. 47–48 (citing Ex. 1003 ¶¶ 78–83).

Petitioner argues that Inoue and Masuda are "analogous art" to the '736 patent because both "pertain to the same field of endeavor: an electro-optical display using display elements arranged in a matrix." Pet. 48–49. Petitioner asserts that "[t]he '736 patent, Masuda, and Inoue also address the same problem–improving display quality." *Id.* at 49. According to Petitioner, "Inoue discloses that, although active-matrix type organic EL display panels have various advantages over passive-matrix type displays, 'it is hard to create a driving element with a uniform characteristic over the entire organic EL panel region' and, as a result, 'the current value flowing to each pixel is different and the brightness varies.'" *Id.* (citing Ex. 1011 ¶¶ 4–5).

Petitioner argues that "Masuda teaches a pixel pattern designed to reduce 'the difference in luminosity between columns or difference in luminosity between rows.'" Pet. 49 (citing Ex. 1009 ¶ 21). According to Petitioner, Masuda explains that conventional arrangements using repeating

colors "could not achieve 'maximum performance'" because the viewer would "perceive alternating red and blue horizontal or vertical lines" and "the output of the repeated element (e.g., green in Masuda Figure 3(b)) must be 'limited to half in order to . . . achieve a color balance.'" *Id.* at 50 (citing Ex. 1009 ¶¶ 20, 24) (alteration in original). Petitioner asserts that Masuda solves this problem using an improved checkerboard pattern that includes "one element that does not contribute to the image display" and places the "primary color display element that has the highest luminosity value and the primary color display element that has the second-highest luminosity value . . . at opposite corner positions." *Id.* (citing Ex. 1009 ¶ 22). This arrangement, according to Petitioner, minimizes the "maximum luminosity difference between rows or columns" and reduces the perception of "striped interference in the display device." *Id.* (citing Ex. 1009 ¶¶ 22, 27). Petitioner also argues that "Masuda's Figure 21 quantifies luminosities by row and column for different possible arrangements of R, B, G, and 'non-display' elements" with a "minimum value among the maximum luminosity differences between columns and rows" of 0.40 where "the red (R) and green (G) are arranged at opposite corner positions." *Id.* at 50–51 (citing Ex. 1009 ¶ 28, Fig. 21).

Petitioner argues that one of ordinary skill "implementing Inoue's display panel of pixels would have been motivated to arrange those pixels in the improved checkerboard pattern taught by Masuda." Pet. 51. Petitioner asserts that Inoue "seeks to reduce the variation in brightness or luminosity across pixels," and thus one of ordinary skill implementing Inoue "would have been motivated to seek out complementary techniques to reduce that variation as much as possible." *Id.* at 51–52 (citing Ex. 1003 ¶¶ 78–83).

According to Petitioner, "Masuda provides such a complementary technique" that "teaches how luminosity varies by how color pixels are arranged." *Id.* at 52. Thus, Petitioner contends, one of ordinary skill implementing Inoue, "upon reviewing Masuda's teachings, would have recognized that how pixels are arranged in Inoue matters," and that Masuda's checkerboard pattern would reduce "the variation in brightness across pixels, rows, and columns," as well as "an observer's impression 'that there is striped interference in the display device.'" *Id.* (citing Ex. 1009 ¶ 27).

Petitioner further argues that "arranging Inoue's pixels in the pattern taught by Masuda would have amounted to an application of known techniques that would have created expected results." Pet. 52. Petitioner asserts that "[a]lthough Inoue itself does not specify how to lay out pixels in its display, it specifically requires that the pixels are 'formed in a matrix.'" *Id.* at 53 (citing Ex. 1011 ¶ 23). Thus, Petitioner contends, one of ordinary skill would have "consider[ed] different, known pixel geometries that could have been used to specify the arrangement of Inoue's pixels," and "Masuda's arrangement was a known option that a [person of ordinary skill in the art] would have found obvious to use." *Id.* (citing Ex. 1003 ¶¶ 81–82). According to Petitioner, "Masuda's teachings of a checkerboard pattern with a non-display element that reduces differences in luminosity is generally applicable to any display technology that uses color elements to implement a pixel." *Id.* (citing Ex. 1003 ¶¶ 74–75). Petitioner asserts that "Masuda itself mentions two types of displays—FE-type and MIM-type—as potentially using the checkerboard pattern," and another reference, KR960012168A to Kwon, "discloses a 'plasma display device' using the

same checkerboard pattern." *Id.* (citing Ex. 1009 ¶ 42; Ex. 1013, Abstr., Fig. 4).

Additionally, Petitioner argues, one of ordinary skill "arranging Inoue's pixels in the pattern taught by Masuda would have had a reasonable expectation of success in making the proposed combination" because Masuda's teachings are generally applicable to different types of display technologies, including the FE-type and ME-type displays mentioned in Masuda itself as well as the plasma displays described in Kwan. Pet. 53–54 (citing Ex. 1009 ¶ 42; Ex. 1013, Fig. 4, Abstr.). According to Petitioner, one of ordinary skill "would have no reason to doubt that the same pattern would be equally successful in an organic EL display, such as that disclosed by Inoue." *Id.* at 54 (citing Ex. 1003 ¶ 83).

Finally, Petitioner argues that during the prosecution of the Japanese counterpart to the '736 patent, "the Applicant acknowledged that Inoue and Masuda could be combined together by describing the characteristics of 'an invention that is achieved through combining the driving method disclosed in [Inoue] with the layout of display elements described in [Masuda]." Pet. 54 (citing Ex. 1007, 8) (alterations in original). According to Petitioner, "[t]his statement binds Patent Owner." *Id.*

b) Patent Owner's Contentions

Patent Owner makes several arguments against the combination of Inoue and Masuda. Prelim. Resp. 19–51. First, Patent Owner argues that Petitioner's motivation to combine is deficient because it "ignore[s] the highly relevant differences between the passive matrix display technology of Masuda and the active matrix OLED technology of Inoue." *Id.* at 25. Patent Owner asserts that "the variation in brightness problem of Masuda is a

product of its display technology, where brightness or luminosity is dependent on the natural characteristics of color," due to "the inherent luminosity differences between the different primary colors, in which green has a luminosity value of 0.59, red has a luminosity value of 0.30, and blue has a luminosity value of 0.11." *Id.* (citing Ex. 1009 ¶ 22, 26; Ex. 2002 ¶ 88). As a result, according to Patent Owner, "the pixel arrangement of Masuda is specific to display devices in which brightness and variations thereof are ***color-dependent***," and "does not reduce variation in pixel luminance ***generally***." *Id.* at 25–26.

Patent Owner goes on to argue that Inoue's brightness variation does not "result[] from pixel colors," but rather is "a product of variations of threshold voltages of its pixel unit drive transistors." Prelim. Resp. 27 (citing Ex. 1011 ¶¶ 7, 9; Ex. 2002 ¶ 90). Thus, Patent Owner asserts, Inoue "explicitly controls the brightness of each pixel via that pixel's driving circuit and a controlled level of current." *Id.* (citing Ex. 1011 ¶¶ 7, 26, 29; Ex. 2002 ¶ 90). Consequently, according to Patent Owner, because Inoue's display device does not have a brightness variation due to differences in color, there would have been no motivation to use Masuda's pixel arrangement that reduces color-dependent variations in pixel luminance. *Id.* at 25–27.

Patent Owner also argues that Petitioner fails to establish a reasonable expectation of success for the combination because it "does not explain how or why Masuda's teachings are applicable to Inoue's display device technology." Prelim. Resp. 28. Patent Owner asserts that Inoue's "brightness variations are a result of pixel unit driving transistor variances," not "color characteristics," and "the Petition fails to establish that Masuda's

pixel arrangement (or any pixel arrangement) would provide a successful result in Inoue, *i.e.*, would resolve Inoue's brightness variation problem." *Id.* at 29.

Second, Patent Owner argues that Masuda is not analogous art because Masuda and the claimed invention of the '736 patent are directed towards fundamentally different types of displays. Prelim. Resp. 30–44. Patent Owner asserts that "Masuda is directed to the field of endeavor of passive matrix displays utilizing field emission display technology." *Id.* at 33 (citing Ex. 1009 ¶¶ 1–2, 34, 42; Ex. 2002 ¶¶ 38, 58). According to Patent Owner, "the problem of visual interference caused by horizontal stripes or vertical stripes that is described in Masuda" is "inherent in passive matrix displays due to their low pixel density causing poor display resolution." *Id.* at 36 (citing Ex. 2002 ¶ 73). This low pixel density, Patent Owner contends, "is related to the fact that, in passive matrix displays, the addition of more rows/columns of pixels means that there is less time to stimulate the pixels because passive matrix displays have no mechanism for storing an image in a row while other rows are being written," causing the maximum resolution to be "significantly limited." *Id.* (citing Ex. 2002 ¶ 73). "In contrast," Patent Owner argues, "active matrix displays include a mechanism for storing an image in a row while other rows are being written, and therefore achieve much greater resolution than passive matrix displays, which avoids the problem mentioned in Masuda." *Id.* at 36–37 (citing Ex. 2002 ¶¶ 73–74).

In contrast to Masuda, Patent Owner argues that the field of endeavor of remaining challenged claims 7 and 9 is "an active matrix display," and the field of endeavor of remaining challenged claims 14 and15 is "an OLED

display." Prelim. Resp. 37 (citing Ex. 2002 ¶ 58). Specifically, Patent Owner argues that claim 7 (and claim 9, which depends from claim 7) includes the feature of "the first and second effective optical regions having respective electronic circuits to drive the electro-optical elements provided in the first and second optical regions," which specifies that the claim includes electronic circuits that are in element forming regions and drive electro optical elements, which is a characteristics of active matrix displays. *Id.* at 38 (citing Ex. 2002 ¶¶ 59–60; Ex. 1001, 5:29–35, 6:1–4). Claim 14, according to Patent Owner, includes the feature of "each of the first electro-optical elements and the second electro-optical elements being an electroluminescent element" which indicates that claim 14 (and claim 15 which depends from it) "is directed towards the field of endeavor of an OLED display." *Id.* (citing Ex. 2002 ¶ 62). Additionally, Patent Owner argues, the general structure and method of operation of passive matrix displays and active matrix displays are substantially different. *Id.* at 39–42.

Furthermore, according to Patent Owner, Masuda is not reasonably pertinent to the particular problem with which the inventor is involved. Prelim. Resp. 42. Patent Owner asserts that "Masuda is directed to the problem of visual interference caused by horizontal stripes or vertical stripes due to differences in luminosity between rows or differences in luminosity between columns," which is "a problem that occurs specifically in passive matrix displays due to their low pixel density causing poor display resolution." *Id.* (citing Ex. 1009 ¶ 21; Ex. 2002 ¶¶ 71, 73). In contrast, Patent Owner argues, "the '736 patent is directed towards the problem of how to reduce image distortions and color irregularities caused by directional viewing variations," which occur in "active matrix displays in

which pixel[] circuits have different shapes and/or pitches in the column and row directions." *Id.* at 43 (citing Ex. 1001, 1:11–34; Ex. 2002 ¶¶ 69, 71). Patent Owner further contends that "the problem related to the interference effects of horizontal and vertical stripes of Masuda does not exist in embodiments of the '736 patent" because "active matrix displays included a mechanism for storing an image in a row while other rows are being written and achieved much greater resolution than passive matrix displays, which avoids the problem mentioned in Masuda." *Id.* at 44 (citing Ex. 2002 ¶¶ 73–74).

Third, Patent Owner argues that one of ordinary skill would not have looked to Masuda to modify Inoue. Prelim. Resp. 44–48. For this argument, Patent Owner largely relies on similar reasons as previously discussed, including its arguments that: (1) passive matrix displays (as described in Masuda) and active matrix displays (as described in Inoue) are "entirely different"; (2) Masuda is directed to solving a problem of visual interference caused by horizontal or vertical stripes that is not a problem of active matrix displays; and (3) Inoue already effectively achieves its purpose of uniform brightness control without having Masuda's problem of visual interference due to color-based differences in luminosity. *Id.*

Fourth, Patent Owner argues that modifying Inoue with Masuda would make Inoue unsatisfactory for its intended purpose. Prelim. Resp. 48–50. More specifically, Patent Owner asserts that "[i]f Inoue is modified to implement a checkerboard arrangement of Masuda, instead of using the active light-detecting elements of Inoue, the brightness uniformity of light emission in Inoue would be substantially decreased." *Id.* at 49 (citing Ex. 2002 ¶ 85). According to Patent Owner, "the purported solution of

Masuda does not provide any mechanism for ensuring uniform brightness for all pixels of a display when the voltage applied to light-emitting elements varies due to non-uniform characteristics of a driving element in EL displays." *Id.* at 49–50 (citing Ex. 2002 ¶ 85). "Moreover," Patent Owner contends, "unlike Inoue which enables varying and/or balancing of the brightness level at each pixel in a gradual way and in small increments through the use of light-detecting elements, the checkerboard pattern of Masuda does not provide any mechanism for varying/balancing of brightness levels of individual pixels." *Id.* at 50 (citing Ex. 2002 ¶ 85).

Fifth, Patent Owner argues that the statement that Petitioner points to during the prosecution of the Japanese counterpart to the '736 patent was not an admission that it would have been obvious to combine aspects of Inoue and Masuda. Prelim. Resp. 50–51. According to Patent Owner, this statement "merely describes a hypothetical configuration, and is neither an admission concerning combinability of Inoue and Masuda nor obviousness of combining such references." *Id.* at 51.

c) Analysis

Based on the present record, we determine that Petitioner has failed to show a reasonable likelihood that one of ordinary skill would have been motivated to combine Inoue and Masuda as Petitioner proposes, and would have had a reasonable expectation of success in doing so.

First, we agree with Patent Owner that Petitioner's motivation to combine is deficient because it fails to sufficiently account for the differences between the active matrix system of Inoue and the passive matrix system of Masuda. Patent Owner introduces testimony from Dr. Silzars that passive and active matrix displays "differ in their structure and functions"

and "[t]he technologies and design methods used for one are not readily transferrable to the others." Ex. 2002 ¶ 11. Passive matrix displays, Dr. Silzars explains, "have rows and columns and are addressed by briefly stimulating each cell to change its light emission characteristics," after which the cell "may have an extended relaxation time to hold the image while the other cells are being addressed." *Id.* ¶ 13. This "require[s] a structure that places the rows on one substrate and the columns on an opposite substrate," where "rows and columns have various voltages applied in a particular sequence to address the cells" and "[t]here is no common electrode." *Id.* ¶ 16 (citing Ex. 2011, 3–4; Ex. 2013, 12); *see id.* ¶ 64. In addition, "the row and column conductors are integral with the pixel electrodes" with "no intervening elements," and may be formed from the same transparent conductor material as the pixel electrodes. *Id.* ¶ 17 (citing Ex. 2011, 4); *see id.* ¶ 65. Moreover, according to Dr. Silzars, "at the time of the alleged invention of Masuda and the filing date of the '736 patent, passive matrix displays had very poor resolution, due to low pixel density, which resulted in the problem of the visual interference caused by horizontal stripes or vertical stripes." *Id.* ¶ 73 (citing Ex. 1011, 4; Ex. 2014, 3–7). This occurred because "the addition of more rows/columns of pixels" in a passive matrix display "means that there is less time to stimulate the pixels," and such displays had "no mechanism for storing an image in a row while other rows are being written." *Id.*

On the other hand, Dr. Silzars explains, active matrix displays are more "complex" and include "electronic circuits that are in element forming regions and drive electro optical elements." Ex. 2002 ¶¶ 14, 59 (citing Ex. 2011, 4–5; Ex. 2013, 11–15; Ex. 1001, 5:29–35, 6:1–4, 6:10–14).

Active matrix displays also have "a common electrode on one substrate while all of the active addressing circuitry is placed on an opposing substrate." *Id.* ¶ 16 (citing Ex. 2011, 6–7); *see id.* ¶ 64. Unlike a passive matrix display, according to Dr. Silzars, in an active matrix display "the pixel electrodes are isolated from the row and column addressing lines by thin film transistors (TFTs) placed in the area of each pixel that does not interfere with the light emission," and "[t]he row and column electrodes for addressing the pixels are placed in the narrow spaces between the pixels or underneath the emitting areas." *Id.* ¶ 17 (citing Ex. 2011, 6–7); *see id.* ¶ 65. Additionally, active matrix displays, unlike passive matrix displays, also include "a supplemental capacitor for each pixel" used "to store additional charge and provide stability and uniformity for the display." *Id.* (citing Ex. 2011, 6–7; Ex. 2013, 11–13). Because of these TFTs and supplemental capacitors, "the cell response is proportional to the total charge that is placed at each pixel location during the addressing period." *Id.* ¶ 18. As Dr. Silzars explains, this distinguishes active matrix displays from passive matrix displays which "do not have such a charge storage mechanism" and are thus "more susceptible to variations in electrode resistance and the voltage drops that can be introduced by such resistance variations." *Id.* "As a result," according to Dr. Silzars, "the structure and method of operation are entirely different for these two types of LC displays," and "the methods used to design and manufacture one type are not readily applicable to the other." *Id.* ¶ 16.

In light of these differences, Dr. Silzars testifies that "it would be highly unlikely" for one of ordinary skill working on an active matrix display "to search out obsolete field emission display technology, which is

implemented in passive matrix displays, described in Masuda." Ex. 2002 ¶ 77. "With Masuda's diametrically different mode of operation and configuration that is limited in the number of pixels that can be implemented," according to Dr. Silzars, one of ordinary skill "working on an active matrix EL display design would never think to search Masuda for the configuration of a display using field emission display technology proposed by Masuda." *Id.* ¶ 79. Additionally, Dr. Silzars opines, "Masuda is directed to solving a problem of visual interference caused by horizontal stripes or vertical stripes that is not a problem of active matrix displays" because they are "capable of greater resolution than passive matrix displays."[4] *Id.* ¶ 81 (citing Ex. 2014, 3–7). Thus, Dr. Silzars continues, "the problem of Masuda is not a problem in Inoue, which describes an improvement for active matrix EL displays," and "the solution of Masuda is not applicable to Inoue." *Id.* Additionally, Dr. Sillars testifies, "Inoue, by itself, operates effectively to achieve uniform brightness control" by using active light-detecting elements for each pixel, and thus "would not have the problem alleged to be solved by Masuda." *Id.* ¶ 82.

We find that the above testimony from Dr. Silzars provides reasonable explanations for why one of ordinary skill would not have been motivated to

[4] Dr. Silzars also explains that "[t]he problem of Masuda of the interference effects of horizontal and vertical stripes is different from the problem of directional viewing variation effects mentioned in the '736 patent because the horizontal and vertical stripes may be perceived at all viewing positions, and because the interference effects of horizontal and vertical stripes is strongly affected by the particular image being displayed whereas the directional viewing variation effects are not related to any specific image." *Id.* ¶ 72.

combine Inoue's active matrix display with Masuda's passive matrix display.

In light of this testimony from Dr. Silzars, Petitioner fails to present sufficient evidence at this stage of the proceeding that of ordinary skill would have been motivated to make the proposed combination. Petitioner introduces testimony from Dr. Liu stating that one of ordinary skill "would have understood that Masuda's specific checkerboard pixel pattern could be useful for many different types of displays," and that the problem Masuda addresses (difference in luminosity by having more of one color element than another) "is independent of the particular technology used to implement those color elements." Ex. 1003 ¶ 74; *see id.* ¶ 83. Dr. Liu also relies on the Kwon patent that uses a similar arrangement in a "plasma display device." *Id.* ¶ 75. Dr. Liu further testifies that, because "Inoue does not restrict how color forming pixels must be laid out," one of ordinary skill implementing Inoue "would have been motivated to look for complementary techniques to further reduce brightness variation," such as the one disclosed in Masuda. *Id.* ¶ 79; *see id.* ¶ 81.

Dr. Liu, however, fails to present sufficient testimony that the combined system would have effectively reduced Inoue's luminosity differences, which are described as being due to variations of threshold voltages of the pixel unit drive transistors rather than the brightness variations resulting from differences in pixel colors which Masuda identifies. As noted above, Patent Owner introduces detailed evidence from Dr. Silzars explaining the many technical differences between passive and active matrix display devices, and why Masuda's solution would not have been applicable to Inoue. Petitioner does not introduce contrary evidence on

this point. Additionally, the fact that the Kwon reference discloses the use of a similar checkerboard pixel pattern in a plasma device does not show that such a pattern would have been advantageous in an active matrix device, or how one of ordinary skill would have implemented such an arrangement in Inoue's system. For similar reasons, we also agree with Patent Owner and Dr. Silzars that Petitioner has failed to make a sufficient showing that one of ordinary skill would have had a reasonable expectation of success in combining Inoue's active matrix display with the Masuda's solution for a passive matrix device.

We further agree with Patent Owner and Dr. Silzars that Inoue and Masuda address different problems. Masuda, is directed to solving a problem of visual interference caused by horizontal or vertical stripes due to luminosity differences between rows or columns. *See* Prelim. Resp. 42; Ex. 1009 ¶ 21; Ex. 2002 ¶¶ 71, 73, 81. Inoue, by contrast, is directed to the problem of improving the uniformity of brightness of light emission of an active matrix EL display by adding active light-detecting elements, to enable a brightness level for each pixel to be varied and balanced in a gradual way in small increments. Ex. 2002 ¶¶ 50–52, 82. As Dr. Silzars explains, the problem identified by Masuda is not a problem of active matrix displays because they are capable of greater resolution than passive matrix displays. *Id.* ¶ 81; *see id.* ¶¶ 73–74. Neither Petitioner nor Dr. Liu points to persuasive evidence that the problem identified by Masuda would be a problem experienced by active matrix displays.

Additionally, we find reasonable Dr. Silzars's testimony that Inoue's brightness variation does not result from "inherent luminosity differences between the different primary colors" (as does Masuda's), but rather "is

caused by variation of the threshold voltage of a transistor serving as a drive element," which Masuda's checkerboard pattern would not have solved. *Id.* ¶¶ 88–91. Neither Petitioner nor Dr. Liu points to persuasive evidence that Inoue's brightness variation would result from luminosity differences among the different primary colors. Given the differences between the problems solved by Inoue and Masuda, Petitioner fails to sufficiently show that one of ordinary skill would have been motivated to combine the references in the manner that Petitioner proposes.

Finally, we disagree with Petitioner's argument that the applicant admitted during the prosecution of the Japanese counterpart to the '736 patent that Inoue and Masuda would have been combined. *See* Pet. 54. The portion of the prosecution upon which Petitioner relies states as follows:

> As described above, an invention that is achieved through combining the driving method disclosed in [Inoue] with the layout of display elements described in [Masuda] would be no more than an invention wherein a basic layout of two rows and two columns is formed through three primary color display elements and one element that does not contribute to an image display, in an organic EL display device of an active matrix display system. Even for a person of skill in the art, there would be considerable difficulty in conceiving of disposing, with respect to the effective optical regions and non-effective optical regions, electronic circuits for driving the electro-optical elements as in post-amendment claim 1 or claim 2 of the present invention.

Ex. 1007, 8.

We agree with Patent Owner that this statement merely refers to a hypothetical combination of Inoue and Masuda that is being assumed for the purposes of argument, as shown by the language referring to "an invention that is achieved through combining" the references. *See* Prelim. Resp. 51. We see nothing in this language that amounts to an admission by the

applicant that it would have been obvious to combine Inoue and Masuda, or that one of ordinary skill would have had a reasonable expectation of success in making such a combination.

Consequently, for the reasons stated above, we determine that Petitioner has failed to demonstrate a reasonable likelihood that one of ordinary skill would have combined Inoue and Masuda as Petitioner proposes.

4. Claims 7, 9 14, and 15

For claims 7, 9, 14, and 15, Petitioner relies on its combination of Inoue and Masuda to argue obviousness. Pet. 66–70, 73–74. Because, as discussed above, Petitioner has failed to sufficiently show that one of ordinary skill would have combined Inoue and Masuda as proposed, we determine that Petitioner has failed to establish a reasonable likelihood of showing that claims 7, 9, 14, 15 would have been obvious based on the combination of Inoue and Masuda.

III. CONCLUSION

As noted above, Patent Owner has disclaimed claims 3–5, 13, 16, and 17, leaving claims 7, 9, 14, and 15 remaining for consideration. After considering the evidence and arguments presented in the current record, we determine that Petitioner has failed to demonstrated a reasonable likelihood of success in proving that claims 7, 9, 14, and 15 of the ’736 patent are unpatentable over the combination of Inoue and Masuda. We therefore decline to institute trial on any of the challenged claims and grounds raised in the Petition.

IV. ORDER

In consideration of the foregoing, it is hereby:

ORDERED that, pursuant to 35 U.S.C. § 314(a), an *inter partes* review is not instituted for any of challenged claims 7, 9, 14, and 15 remaining in this proceeding.

For PETITIONER:

Jeremy J. Monaldo
Joseph Colaianni
Linhong Zhang
FISH & RICHARDSON P.C.
jjm@fr.com
colaianni@fr.com
lwzhang@fr.com

For PATENT OWNER:

Fadi Kiblawi
John M. Bird
Young Sun Kwon
SUGHRUE MION, PLLC
fkiblawi@sughrue.com
jbird@sughrue.com
ykwon@sughrue.com