US007049761B2

(12) **United States Patent**
Timmermans et al.

(10) **Patent No.: US 7,049,761 B2**
(45) **Date of Patent: May 23, 2006**

(54) **LIGHT TUBE AND POWER SUPPLY CIRCUIT**

(75) Inventors: **Jos Timmermans**, Dearborn, MI (US); **Jean C. Raymond**, Montreal (CA)

(73) Assignee: **Altair Engineering, Inc.**, Troy, MI (US)

(*) Notice: Subject to any disclaimer, the term of this patent is extended or adjusted under 35 U.S.C. 154(b) by 375 days.

(21) Appl. No.: **09/782,375**

(22) Filed: **Feb. 12, 2001**

(65) **Prior Publication Data**

US 2002/0060526 A1 May 23, 2002

Related U.S. Application Data

(60) Provisional application No. 60/181,744, filed on Feb. 11, 2000.

(51) **Int. Cl.**
H05B 37/02 (2006.01)

(52) **U.S. Cl.** ..... **315/246**; 315/291; 315/185 S

(58) **Field of Classification Search** ..... 315/146, 315/291, 185 S, 312, 324, 192, 185 R, 295, 315/246, 187, 294, 56, 200 A, 61; 340/815.45; 362/488, 240, 219, 800, 369, 545, 288, 249
See application file for complete search history.

(56) **References Cited**

U.S. PATENT DOCUMENTS

4,581,687	A		4/1986	Nakanishi	
4,748,545	A	*	5/1988	Schmitt	362/219
5,388,357	A		2/1995	Malita	
5,463,280	A	*	10/1995	Johnson	315/187
5,575,459	A		11/1996	Anderson	
5,607,227	A		3/1997	Yasumoto et al.	
5,655,830	A		8/1997	Ruskouski	
5,688,042	A	*	11/1997	Madadi et al.	362/240
5,697,695	A		12/1997	Lin et al.	
5,726,535	A	*	3/1998	Yan	315/185 R
5,813,751	A	*	9/1998	Shaffer	362/222
5,890,794	A	*	4/1999	Abtahi et al.	362/183
5,924,784	A	*	7/1999	Chliwnyj et al.	362/234
5,949,347	A	*	9/1999	Wu	340/815.45
6,072,280	A	*	6/2000	Allen	315/185 S
6,158,882	A	*	12/2000	Bischoff, Jr.	362/488
6,305,109	B1	*	10/2001	Lee	40/546
6,325,651	B1	*	12/2001	Nishihara et al.	439/232
6,371,637	B1	*	4/2002	Atchinson et al.	362/555
6,394,623	B1	*	5/2002	Tsui	362/249
6,577,072	B1	*	6/2003	Saito et al.	315/185 R
6,582,103	B1	*	6/2003	Popovich et al.	362/307
6,621,222	B1	*	9/2003	Hong	315/51

OTHER PUBLICATIONS

Web page at http://trucklite.com/leds14.html printed on Jan. 13, 2000.
Web page at http://trucklite.com/leds2.html printed on Jan. 13, 2000.
Web page at http://trucklite.com/leds4.html printed on Jan. 13, 2000.
Web page at http://www.telecite.com/en/products/options_en.htm printed on Jan. 13, 2000.
Web page at http://www.dialight.com/trans.htm printed on Jan. 13, 2000.
Web page at http://www.ledlights.com/replac.htm printed on Jan. 13, 2000.
Ledtronics, apparently 1996 Catalog, apparently cover page and p. 10.

* cited by examiner

Primary Examiner—Wilson Lee
Assistant Examiner—Chuc Tran
(74) *Attorney, Agent, or Firm*—Young & Basile, P.C.

(57) **ABSTRACT**

The present invention provides a light tube for illumination by a power supply circuit including a bulb portion and a pair of end caps disposed at opposite ends of the bulb portion. A plurality of light emitting diodes are disposed inside the bulb portion and in electrical communication with the pair of end caps for illuminating in response to electrical current to be received from the power supply circuit.

26 Claims, 10 Drawing Sheets

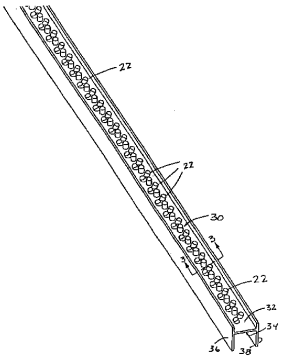

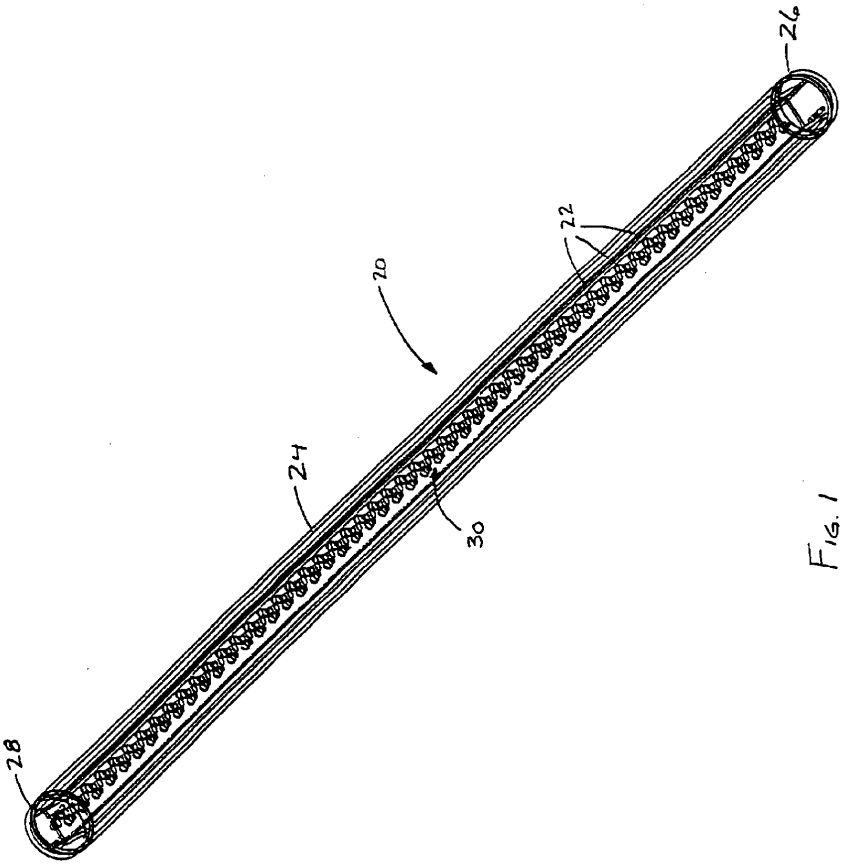

FIG. 1

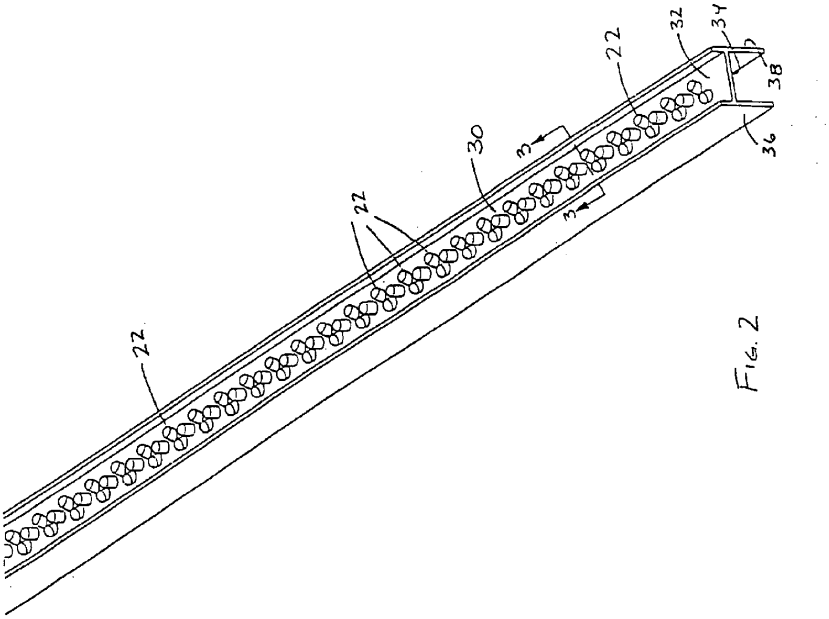

FIG. 2

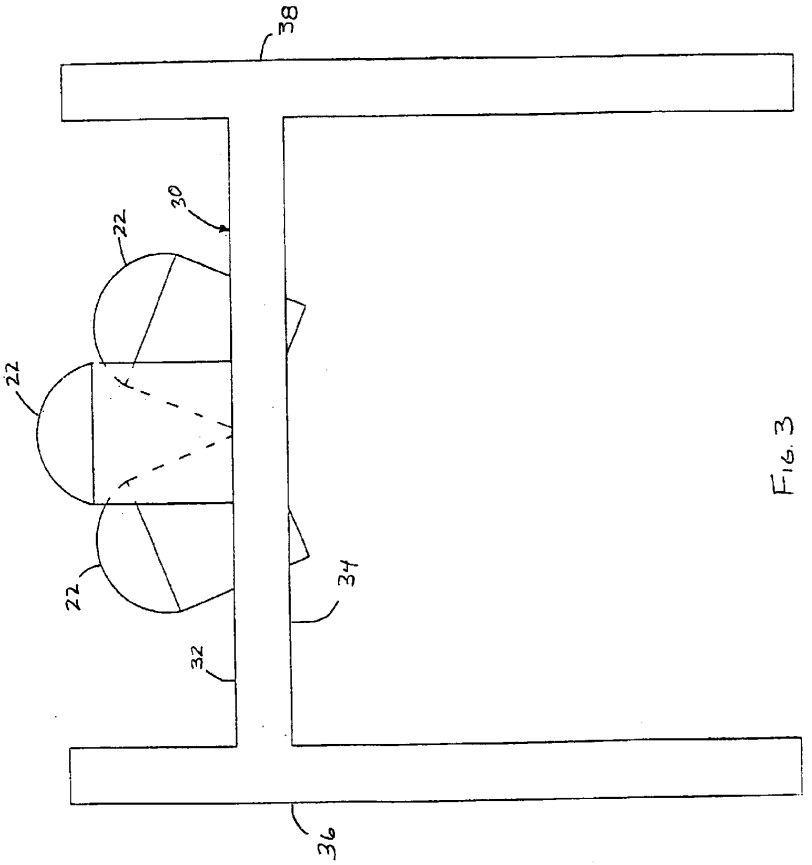

FIG. 3

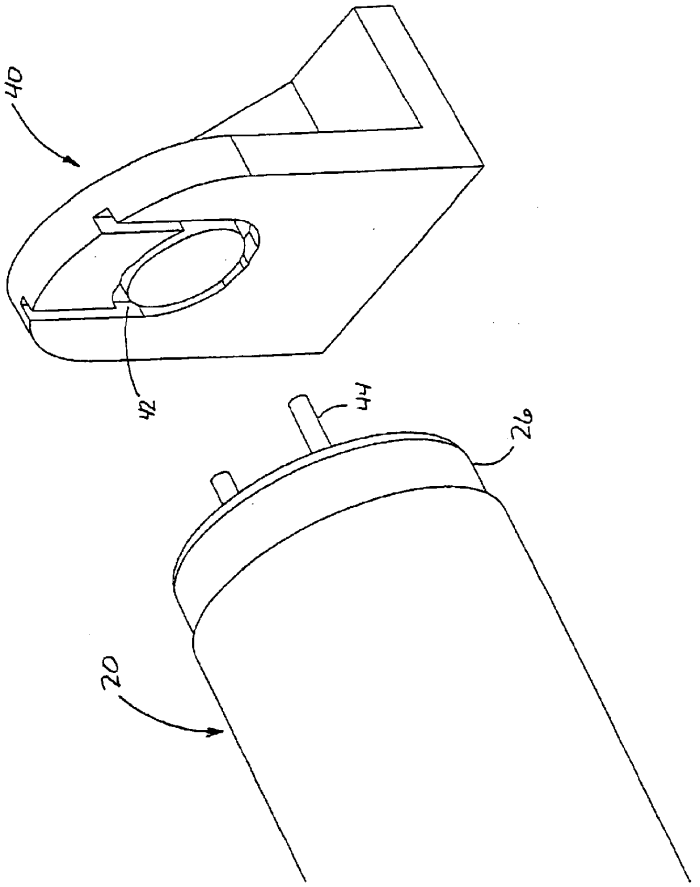

FIG. 4

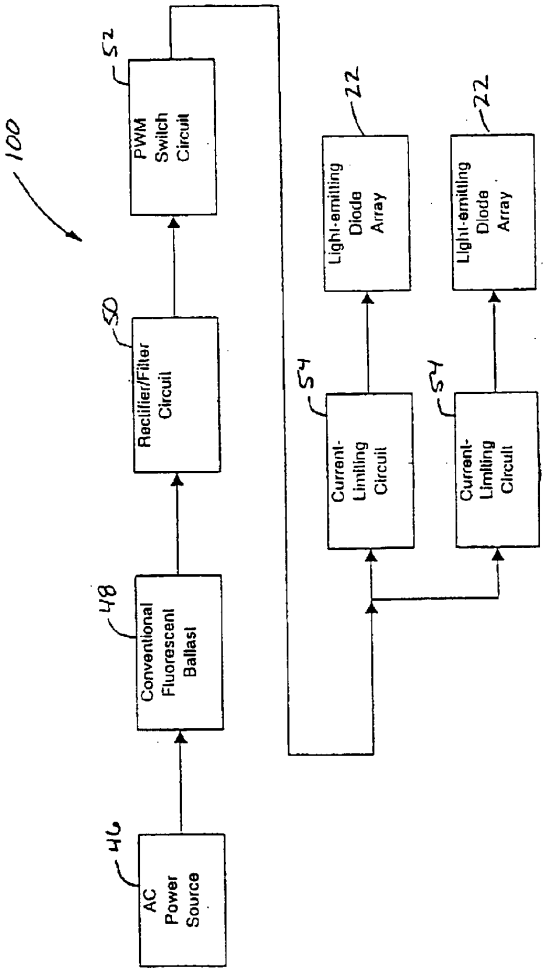
100
46
AC Power Source
48
Conventional Fluorescent Ballast
50
Rectifier/Filter Circuit
52
PWM Switch Circuit
54
Current-Limiting Circuit
54
Current-Limiting Circuit
22
Light-emitting Diode Array
22
Light-emitting Diode Array

FIG. 5

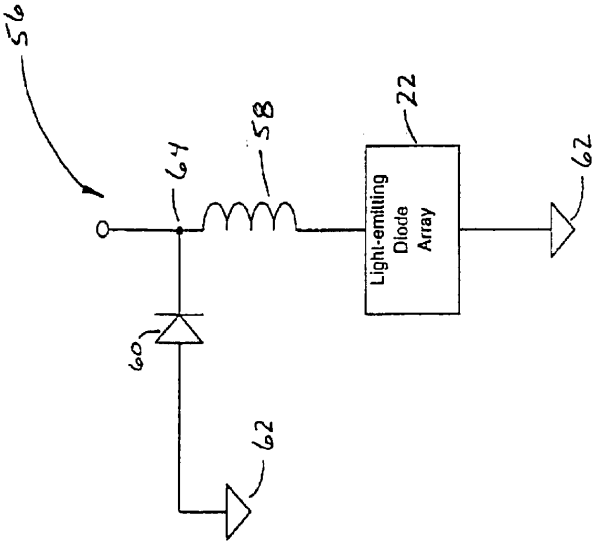

FIG. 6

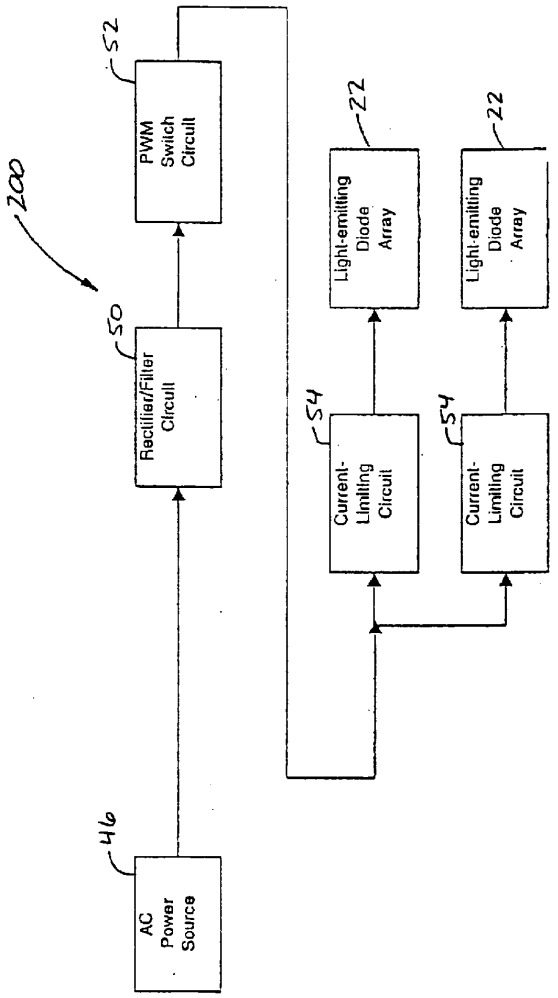
200
46
AC Power Source
50
Rectifier/Filter Circuit
52
PWM Switch Circuit
54
Current-Limiting Circuit
54
Current-Limiting Circuit
22
Light-emitting Diode Array
22
Light-emitting Diode Array

FIG. 7

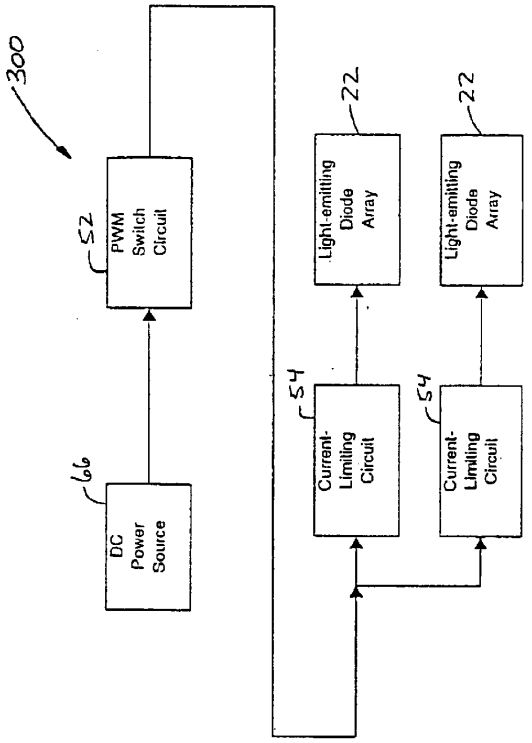
300
66
DC Power Source
52
PWM Switch Circuit
54
Current-Limiting Circuit
22
Light-emitting Diode Array
54
Current-Limiting Circuit
22
Light-emitting Diode Array

FIG. 8

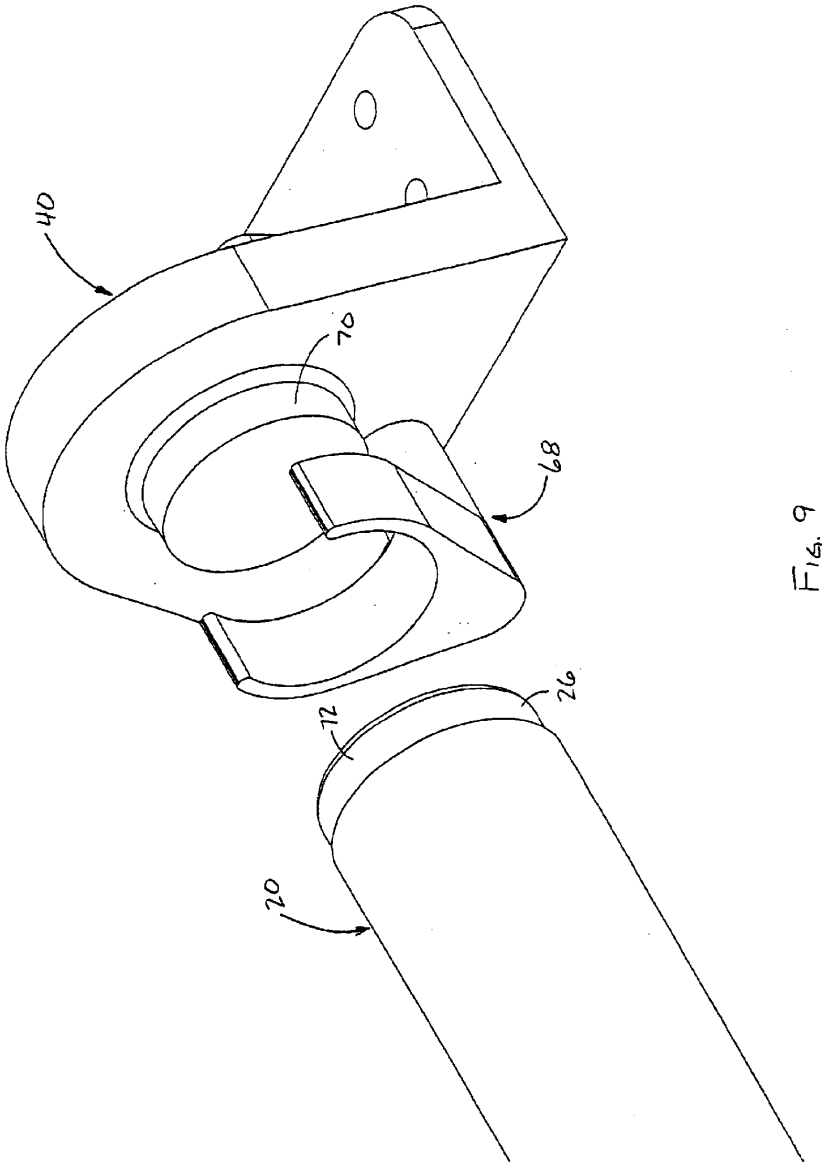

FIG. 9

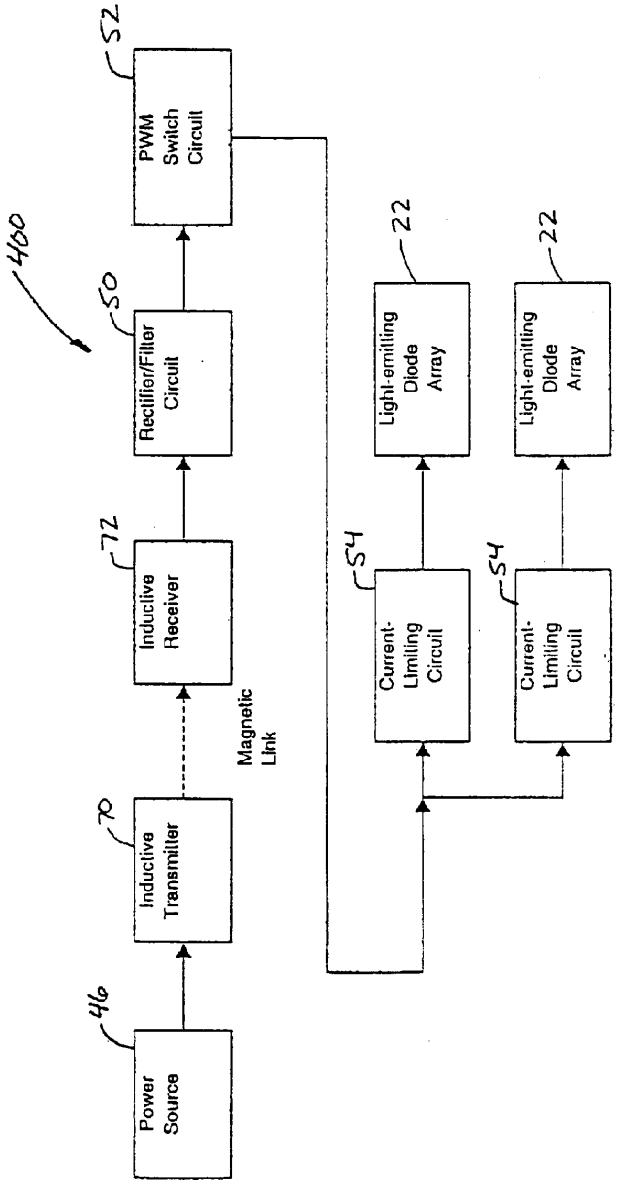
460
46
Power Source
70
Inductive Transmitter
Magnetic Link
72
Inductive Receiver
50
Rectifier/Filter Circuit
52
PWM Switch Circuit
54
Current-Limiting Circuit
54
Current-Limiting Circuit
22
Light-emitting Diode Array
22
Light-emitting Diode Array

FIG. 10

LIGHT TUBE AND POWER SUPPLY CIRCUIT

CROSS-REFERENCE TO RELATED APPLICATIONS

This application claims the benefit of U.S. Provisional Application Ser. No. 60/181,744 filed Feb. 11, 2000.

FIELD OF THE INVENTION

The present invention relates to a light tube illuminated by LEDs (light emitting diodes) which are packaged inside the light tube and powered by a power supply circuit.

BACKGROUND OF THE INVENTION

Conventional fluorescent lighting systems include fluorescent light tubes and ballasts. Such lighting systems are used in a variety of locations, such as buildings and transit buses, for a variety of lighting purposes, such as area lighting or backlighting. Although conventional fluorescent lighting systems have some advantages over known lighting options, such as incandescent lighting systems, conventional fluorescent light tubes and ballasts have several shortcomings. Conventional fluorescent light tubes have a short life expectancy, are prone to fail when subjected to excessive vibration, consume high amounts of power, require a high operating voltage, and include several electrical connections which reduce reliability. Conventional ballasts are highly prone to fail when subjected to excessive vibration. Accordingly, there is a desire to provide a light tube and power supply circuit which overcome the shortcomings of conventional fluorescent lighting systems. That is, there is a desire to provide a light tube and power supply circuit which have a long life expectancy, are resistant to vibration failure, consume low amounts of power, operate on a low voltage, and are highly reliable. It would also be desirable for such a light tube to mount within a conventional fluorescent light tube socket.

SUMMARY OF THE INVENTION

A light tube for illumination by a power supply circuit includes a bulb portion and a pair of end caps disposed at opposite ends of the bulb portion. A plurality of light emitting diodes are disposed inside the bulb portion and in electrical communication with the pair of end caps, which diodes illuminate in response to electrical current received from the power supply circuit.

BRIEF DESCRIPTION OF THE DRAWINGS

The description herein makes reference to the accompanying drawings wherein like reference numerals refer to like parts throughout the several views, and wherein:

FIG. **1** is a line drawing showing a light tube, in perspective view, which in accordance with the present invention is illuminated by LEDs packaged inside the light tube;

FIG. **2** is a perspective view of the LEDs mounted on a circuit board;

FIG. **3** is a cross-sectional view of FIG. **2** taken along lines **3**—**3**;

FIG. **4** is a fragmentary, perspective view of one embodiment of the present invention showing one end of the light tube disconnected from one end of a light tube socket;

FIG. **5** is an electrical block diagram of a first power supply circuit for supplying power to the light tube;

FIG. **6** is an electrical schematic of a switching power supply type current limiter;

FIG. **7** is an electrical block diagram of a second power supply circuit for supplying power to the light tube;

FIG. **8** is an electrical block diagram of a third power supply circuit for supplying power to the light tube;

FIG. **9** is a fragmentary, perspective view of another embodiment of the present invention showing one end of the light tube disconnected from one end of the light tube socket; and

FIG. **10** is an electrical block diagram of a fourth power supply circuit for supplying power to the light tube.

DESCRIPTION OF THE PREFERRED EMBODIMENT

FIG. **1** is a line drawing showing a light tube **20** in perspective view. In accordance with the present invention, the light tube **20** is illuminated by LEDs **22** packaged inside the light tube **20**. The light tube **20** includes a cylindrically shaped bulb portion **24** having a pair of end caps **26** and **28** disposed at opposite ends of the bulb portion. Preferably, the bulb portion **24** is made from a transparent or translucent material such as glass, plastic, or the like. As such, the bulb material may be either clear or frosted.

In a preferred embodiment of the present invention, the light tube **20** has the same dimensions and end caps **26** and **28** (e.g. electrical male bi-pin connectors, type G**13**) as a conventional fluorescent light tube. As such, the present invention can be mounted in a conventional fluorescent light tube socket (not shown).

The line drawing of FIG. **1** also reveals the internal components of the light tube **20**. The light tube **20** further includes a circuit board **30** with the LEDs **22** mounted thereon. The circuit board **30** and LEDs **22** are enclosed inside the bulb portion **24** and the end caps **26** and **28**.

FIG. **2** is a perspective view of the LEDs **22** mounted on the circuit board **30**. A group of LEDs **22**, as shown in FIG. **2**, is commonly referred to as a bank or array of LEDs. Within the scope of the present invention, the light tube **20** may include one or more banks or arrays of LEDs **22** mounted on one or more circuit boards **30**. In a preferred embodiment of the present invention, the LEDs **22** emit white light and, thus, are commonly referred to in the art as white LEDs. In FIGS. **1** and **2**, the LEDs **22** are mounted to one surface **32** of the circuit board **30**. In a preferred embodiment of the present invention, the LEDs **22** are arranged to emit or shine white light through only one side of the bulb portion **24**, thus directing the white light to a predetermined point of use. This arrangement reduces light losses due to imperfect reflection in a conventional lighting fixture. In alternative embodiments of the present invention, LEDs **22** may also be mounted, in any combination, to the other surfaces **34**, **36**, and/or **38** of the circuit board **30**.

FIG. **3** is a cross-sectional view of FIG. **2** taken along lines **3**—**3**. To provide structural strength along the length of the light tube **20**, the circuit board **30** is designed with a H-shaped cross-section. To produce a predetermined radiation pattern or dispersion of light from the light tube **20**, each LED **22** is mounted at an angle relative to adjacent LEDs and/or the mounting surface **32**. The total radiation pattern of light from the light tube **20** is effected by (1) the mounting angle of the LEDs **22** and (2) the radiation pattern of light from each LED. Currently, white LEDs having a viewing range between 6° and 45° are commercially available.

FIG. **4** is a fragmentary, perspective view of one embodiment of the present invention showing one end of the light tube **20** disconnected from one end of a light tube socket **40**.

Similar to conventional fluorescent lighting systems and in this embodiment of the present invention, the light tube socket **40** includes a pair of electrical female connectors **42** and the light tube **20** includes a pair of mating electrical male connectors **44**.

Within the scope of the present invention, the light tube **20** may be powered by one of four power supply circuits **100**, **200**, **300**, and **400**. A first power supply circuit includes a power source and a conventional fluorescent ballast. A second power supply circuit includes a power source and a rectifier/filter circuit. A third power supply circuit includes a DC power source and a PWM (Pulse Width Modulation) circuit. A fourth power supply circuit powers the light tube **20** inductively.

FIG. **5** is an electrical block diagram of a first power supply circuit **100** for supplying power to the light tube **20**. The first power supply circuit **100** is particularly adapted to operate within an existing, conventional fluorescent lighting system. As such, the first power supply circuit **100** includes a conventional fluorescent light tube socket **40** having two electrical female connectors **42** disposed at opposite ends of the socket. Accordingly, a light tube **20** particularly adapted for use with the first power supply circuit **100** includes two end caps **26** and **28**, each end cap having the form of an electrical male connector **44** which mates with a corresponding electrical female connector **42** in the socket **40**.

The first power supply circuit **100** also includes a power source **46** and a conventional magnetic or electronic fluorescent ballast **48**. The power source **46** supplies power to the conventional fluorescent ballast **48**.

The first power supply circuit **100** further includes a rectifier/filter circuit **50**, a PWM circuit **52**, and one or more current-limiting circuits **54**. The rectifier/filter circuit **50**, the PWM circuit **52**, and the one or more current-limiting circuits **54** of the first power supply circuit **100** are packaged inside one of the two end caps **26** or **28** of the light tube **20**.

The rectifier/filter circuit **50** receives AC power from the ballast **48** and converts the AC power to DC power. The PWM circuit **52** receives the DC power from the rectifier/filter circuit **50** and pulse-width modulates the DC power to the one or more current-limiting circuits **54**. In a preferred embodiment of the present invention, the PWM circuit **52** receives the DC power from the rectifier/filter circuit **50** and cyclically switches the DC power on and off to the one or more current-limiting circuits **54**. The DC power is switched on and off by the PWM circuit **52** at a frequency which causes the white light emitted from the LEDs **22** to appear, when viewed with a "naked" human eye, to shine continuously. The PWM duty cycle can be adjusted or varied by control circuitry (not shown) to maintain the power consumption of the LEDs **22** at safe levels.

The DC power is modulated for several reasons. First, the DC power is modulated to adjust the brightness or intensity of the white light emitted from the LEDs **22** and, in turn, adjust the brightness or intensity of the white light emitted from the light tube **20**. Optionally, the brightness or intensity of the white light emitted from the light tube **20** may be adjusted by a user. Second, the DC power is modulated to improve the illumination efficiency of the light tube **20** by capitalizing upon a phenomenon in which short pulses of light at high brightness or intensity to appear brighter than a continuous, lower brightness or intensity of light having the same average power. Third, the DC power is modulated to regulate the intensity of light emitted from the light tube **20** to compensate for supply voltage fluctuations, ambient temperature changes, and other such factors which effect the intensity of white light emitted by the LEDs **22**. Fourth, the DC power is modulated to raise the variations of the frequency of light above the nominal variation of 120 to 100 Hz thereby reducing illumination artifacts caused by low frequency light variations, including interactions with video screens. Fifth, the DC power may optionally be modulated to provide an alarm function wherein light from the light tube **20** cyclically flashes on and off.

The one or more current-limiting circuits **54** receive the pulse-width modulated or switched DC power from the PWM circuit **52** and transmit a regulated amount of power to one or more arrays of LEDs **22**. Each current-limiting circuit **54** powers a bank of one or more white LEDs **22**. If a bank of LEDs **22** consists of more than one LED, the LEDs are electrically connected in series in an anode to cathode arrangement. If brightness or intensity variation between the LEDs **22** can be tolerated, the LEDs can be electrically connected in parallel.

The one or more current-limiting circuits **54** may include (1) a resistor, (2) a current-limiting semiconductor circuit, or (3) a switching power supply type current limiter.

FIG. **6** is an electrical schematic of a switching power supply type current limiter **56**. The limiter **56** includes an inductor **58**, electrically connected in series between the PWM circuit **52** and the array of LEDs **22**, and a power diode **60**, electrically connected between ground **62** and a PWM circuit/inductor node **64**. The diode **60** is designed to begin conduction after the PWM circuit **52** is switched off. In this case, the value of the inductor **58** is adjusted in conjunction with the PWM duty cycle to provide the benefits described above. The switching power supply type current limiter **56** provides higher power efficiency than the other types of current-limiting circuits listed above.

FIG. **7** is an electrical block diagram of a second power supply circuit **200** for supplying power to the light tube **20**. Similar to the first power supply circuit **100**, the second power supply circuit **200** includes a conventional fluorescent light tube socket **40** having two electrical female connectors **42** disposed at opposite ends of the socket **40**. Accordingly, a light tube **20** particularly adapted for use with the second power supply circuit **200** includes two end caps **26** and **28**, each end cap having the form of an electrical male connector **44** which mates with a corresponding electrical female connector **42** in the socket **40**.

In the second power supply circuit **200**, the power source **46** supplies power directly to the rectifier/filter circuit **50**. The rectifier/filter circuit **50**, the PWM circuit **52**, and the one or more current-limiting circuits **54** operate as described above to power the one or more arrays of LEDs **22**. The rectifier/filter circuit **50**, the PWM circuit **52**, and the one or more current-limiting circuits **54** of the second power supply circuit **200** are preferably packaged inside the end caps **26** and **28** or the bulb portion **24** of the light tube **20** or inside the light tube socket **40**.

FIG. **8** is an electrical block diagram of a third power supply circuit **300** for supplying power to the light tube **20**. Similar to the first and second power supply circuits **100** and **200**, the third power supply circuit **300** includes a conventional fluorescent light tube socket **40** having two electrical female connectors **42** disposed at opposite ends of the socket **40**. Accordingly, a light tube **20** particularly adapted for use with the third power supply circuit **300** includes two end caps **26** and **28**, each end cap having the form of an electrical male connector **44** which mates with a corresponding electrical female connector **42** in the socket **40**.

The third power supply circuit **300** includes a DC power source **66**, such as a vehicle battery. In the third power

supply circuit **300**, the DC power source **66** supplies DC power directly to the PWM circuit **52**. The PWM circuit **52** and the one or more current-limiting circuits **54** operate as described above to power the one or more arrays of LEDs **22**. In the third power supply circuit **300**, the PWM circuit **52** is preferably packaged in physical location typically occupied by the ballast of a conventional fluorescent lighting system while the one or more current-limiting circuits **54** and LEDs **22** are preferably packaged inside the light tube **20**, in either one of the two end caps **26** or **28** or the bulb portion **24**.

FIG. **9** is a fragmentary, perspective view of another embodiment of the present invention showing one end of the light tube **20** disconnected from one end of the light tube socket **40**. In this embodiment of the present invention, the light tube socket **40** includes a pair of brackets **68** and the light tube **20** includes a pair of end caps **26** and **28** which mate with the brackets **68**.

FIG. **10** is an electrical block diagram of a fourth power supply circuit **400** for supplying power to the light tube **20**. Unlike the first, second, and third power supply circuits **100**, **200**, and **300** which are powered through direct electrical male and female connectors **44** and **42**, the fourth power supply circuit **400** is powered inductively. As such, the fourth power supply circuit **400** includes a light tube socket **40** having two brackets **68** disposed at opposite ends of the socket **40**. At least one bracket **68** includes an inductive transmitter **70**. Accordingly, a light tube **20** particularly adapted for use with the fourth power supply circuit **400** has two end caps **26** and **28** with at least one end cap including an inductive receiver or antenna **72**. When the light tube **20** is mounted in the light tube socket **40**, the at least one inductive receiver **72** in the light tube **20** is disposed adjacent to the at least one inductive transmitter **70** in the light tube socket **40**.

The fourth power supply circuit **400** includes the power source **46** which supplies power to the at least one inductive transmitter **70** in the light tube socket **40**. The at least one transmitter **70** inductively supplies power to the at least one receiver **72** in one of the end caps **26** and/or **28** of the light tube **20**. The at least one inductive receiver **72** supplies power to the rectifier/filter circuit **50**. The rectifier/filter circuit **50**, PWM circuit **52**, and the one or more current-limiting circuits **54** operate as described above to power the one or more arrays of LEDs **22**. In this manner, the light tube **20** is powered without a direct electrical connection.

What is claimed is:

1. A light device for illumination by a power supply circuit comprising:

a bulb portion,

a first end cap disposed at one end of the bulb portion,

a second end cap disposed at an end of bulb portion opposite the first end cap, the first and second end caps forming a pair of end caps on opposite ends of the bulb portion; and wherein the bulb portion and the pair of end caps are dimensioned to be mounted in a fluorescent light tube socket, and

a plurality of light emitting diodes disposed inside the bulb portion, the light emitting diodes in electrical communication with the end cap for illuminating in response to electrical current received from the power supply circuit, and wherein the plurality of light emitting diodes is mounted an at least one circuit board; and wherein each of the plurality of light emitting diodes is mounted at an angular off-set from the circuit board to establish a predetermined radiation pattern of light.

2. A light tube for illumination by a power supply circuit comprising:

a bulb portion,

a first of end caps disposed at opposite ends of the bulb portion, wherein each of the pair of end caps is shaped to be coupled with a fluorescent light tube socket, and

a plurality of closely-spaced light emitting diodes disposed inside the bulb portion and extending between the opposite ends of the bulb portion, the light emitting diodes in electrical communication with the pair of end caps for illuminating in response to electrical current received from the power supply circuit; and wherein each of the pair of end caps is an electrical bi-pin connector.

3. In a replacement light tube for a fluorescent light fixture having a light tube socket and a power supply circuit, the improvement comprising:

a plurality of closely-spaced light emitting diodes disposed inside a bulb portion of the light tube and in electrical communication with a pair of end caps coupled to opposed ends of the bulb portion and engageable with the light tube socket, the plurality of light emitting diodes operable to illuminate in response to electrical current delivered by the fluorescent light; and wherein each of the pair of end caps is an electrical bi-pin connector.

4. The improvement of claim **3**, wherein the plurality of light emitting diodes is mounted to a circuit board.

5. The improvement of claim **4**, wherein each of the plurality of light emitting diodes is mounted at an angular off-set from the circuit board to establish a predetermined radiation pattern of light.

6. The light device of claim **1** wherein the plurality of light emitting diodes is mounted on only one side of the at least one circuit board.

7. The light device of claim **6** wherein the radiation pattern of light from each of the plurality of light emitting diodes is centered at a 90° angle relative to the at least one circuit board.

8. The light device of claim **1** wherein each of the plurality of light emitting diodes is a white LED.

9. The light device of claim **1**, wherein the plurality of light emitting diodes is displaced substantially continuously between the opposite ends of the bulb portion.

10. A light device for illumination by a power supply circuit comprising:

a bulb portion,

a first end cap disposed at one end of the bulb portion, and

a plurality of light emitting diodes disposed inside the bulb portion, the light emitting diodes in electrical communication with the end cap for illumination in response to electrical current received from the power supply circuit; and wherein the plurality of light emitting diodes is mounted on at least one circuit board; and wherein each of the plurality of light emitting diodes is mounted at an angular off-set from the circuit board to establish a predetermined radiation pattern of light; and wherein each of the plurality of light emitting diodes is arranged into one of a plurality of equidistantly-spaced light emitting diode banks, each of the plurality of light emitting diode banks comprising at least two light emitting diodes.

11. The improvement of claim **3** wherein the bulb portion is annular.

12. The improvement of claim **3** wherein the electric current is a direct current signal, the improvement further comprising:

a rectifier for converting an alternating current signal from the fluorescent light fixture to the direct current signal.

13. In a replacement light tube for a flourescent light fixture having a light tube socket and a power supply circuit, the improvement comprising:

a plurality of closely-spaced light emitting diodes disposed inside a bulb portion of the light tube and in electrical communication with a pair of end caps coupled to opposed ends of the bulb portion and engageable with the light tube socket, the plurality of light emitting diodes operable to illuminate in response to electrical current delivered by the flourescent light fixture wherein the electric current is a direct current signal;

a rectifier for converting an alternating current signal from the fluorescent light fixture to the direct current signal; and

a pulse-width modulating circuit for receiving the direct current signal and supplying a resulting modulated signal to the plurality of light emitting diodes.

14. The improvement of claim **3** wherein each of the plurality of light emitting diodes is a white LED.

15. In a replacement light tube for a flourescent light fixture having a light tube socket and a power supply circuit, the improvement comprising:

a plurality of closely-spaced light emitting diodes disposed inside a bulb portion of the light tube and in electrical communication with a pair of end caps coupled to opposed ends of the bulb portion and engageable with the light tube socket, the plurality of light emitting diodes operable to illuminate in response to electrical current delivered by the flourescent light fixture; and wherein each of the plurality of light emitting diodes is arranged into one of a plurality of spaced light emitting diode banks, each of the plurality of light emitting diode banks comprising at least two light emitting diodes.

16. The improvement of claim **4** wherein the plurality of light emitting diodes is mounted on only one side of the circuit board to emit light toward only one side of the bulb portion.

17. The improvement of claim **16** wherein the radiation pattern of light from each of the plurality of light emitting diodes is centered at a 90° angle relative to the circuit board.

18. The light device of claim **1** wherein the bulb portion comprises one of clear glass and frosted glass.

19. A retrofit LED light tube for replacing a light tube in a fixture, the retrofit LED light tube comprising:

a elongated cylindrical transparent envelope,

a base cap at an end of the envelope, wherein the base cap is an electrical bi-pin connector comprising a first pin and a second pin extending perpendicularly from a surface of the base cap, wherein the first and second pins are adapted to electrically communicate with a fluorescent light socket; and

at least one LED device in electrical communication with the base cap, wherein the at least one LED device is electrically connected to a rectifier and the at least one LED device is further electrically connected to a pulse-width modulating circuit receiving a direct current signal from the rectifier and supplying a modulated signal to the at least one LED device.

20. The retrofit light tube of claim **19**, wherein the LED device comprises a circuit board and a plurality of LEDs serially connected to the circuit board.

21. The retrofit light tube of claim **19**, further comprising:

current-limiting means coupled to the at least one LED device.

22. The retrofit light tube of claim **19** wherein the base cap has circuitry means for connection with an AC source.

23. The light device of claim **1** wherein each of the plurality of light emitting diodes is arranged into one of a plurality of spaced light emitting diode banks, each of the plurality of light emitting diode banks comprising at least two light emitting diodes.

24. The improvement of claim **3** wherein each of the plurality of light emitting diodes is arranged into one of a plurality of spaced light emitting diode banks, each of the plurality of light emitting diode banks comprising at least two light emitting diodes.

25. The improvement of claim **24** wherein each of the plurality of spaced light emitting diode banks is spaced equidistant from adjacent ones of the plurality of spaced light emitting diode banks.

26. The improvement of claim **15** wherein each of the plurality of spaced light emitting diode banks is spaced equidistant from adjacent ones of the plurality of spaced light emitting diode banks.

* * * * *

UNITED STATES PATENT AND TRADEMARK OFFICE

CERTIFICATE OF CORRECTION

PATENT NO. : 7,049,761 B2
APPLICATION NO. : 09/782375
DATED : May 23, 2006
INVENTOR(S) : Memduh Guney et al.

It is certified that error appears in the above-identified patent and that said Letters Patent is hereby corrected as shown below:

Delete the title page and substitute therefor the attached title page.

Delete Drawings Sheets 1-10 and substitute therefor the attached Drawings Sheets 1-10.

Column 5, Line 63; In claim 1, delete "circuit," and insert -- circuit; --, therefor.

Column 5, Line 64; In claim 1, delete "an" and insert -- on --, therefor.

Column 6, Line 1; In claim 2, delete "tube" and insert -- device --, therefor.

Column 6, Line 4; In claim 2, delete "first" and insert -- pair --, therefor.

Column 6, Line 51; In claim 10, delete "illumination" and insert -- illuminating --, therefor.

Column 8, Line 3; In claim 19, delete "a" and insert -- an --, therefor.

Column 8, Line 3; In claim 19, delete "envelope," and insert -- envelope; --, therefor.

Signed and Sealed this

Twenty-sixth Day of May, 2009

John Doll

JOHN DOLL
Acting Director of the United States Patent and Trademark Office

(12) **United States Patent**
Timmermans et al.

(10) **Patent No.: US 7,049,761 B2**
(45) **Date of Patent: May 23, 2006**

(54) **LIGHT TUBE AND POWER SUPPLY CIRCUIT**

(75) Inventors: **Jos Timmermans**, Dearborn, MI (US); **Jean C. Raymond**, Montreal (CA)

(73) Assignee: **Altair Engineering, Inc.**, Troy, MI (US)

(*) Notice: Subject to any disclaimer, the term of this patent is extended or adjusted under 35 U.S.C. 154(b) by 375 days.

(21) Appl. No.: **09/782,375**

(22) Filed: **Feb. 12, 2001**

(65) **Prior Publication Data**

US 2002/0060526 A1 May 23, 2002

Related U.S. Application Data

(60) Provisional application No. 60/181,744, filed on Feb. 11, 2000.

(51) **Int. Cl.**
H05B 37/02 (2006.01)

(52) **U.S. Cl.** ..... **315/246**; 315/291; 315/185 S

(58) **Field of Classification Search** ..... 315/146, 315/291, 185 S, 312, 324, 192, 185 R, 295, 315/246, 187, 294, 56, 200 A, 61; 340/815.45; 362/488, 240, 219, 800, 369, 545, 288, 249
See application file for complete search history.

(56) **References Cited**

U.S. PATENT DOCUMENTS

4,581,687	A		4/1986	Nakanishi
4,748,545	A	*	5/1988	Schmitt
5,388,357	A		2/1995	Malita
5,463,280	A	*	10/1995	Johnson
5,575,459	A		11/1996	Anderson
5,607,227	A		3/1997	Yasumoto et al.
5,655,830	A		8/1997	Ruskouski
5,688,042	A	*	11/1997	Madadi et al.
5,697,695	A		12/1997	Lin et al.
5,726,535	A	*	3/1998	Yan
5,813,751	A	*	9/1998	Shaffer
5,890,794	A	*	4/1999	Abtahi et al.
5,924,784	A	*	7/1999	Chliwnyj et al.
5,949,347	A	*	9/1999	Wu
6,072,280	A	*	6/2000	Allen
6,158,882	A	*	12/2000	Bischoff, Jr.
6,305,109	B1	*	10/2001	Lee
6,325,651	B1	*	12/2001	Nishihara et al.
6,371,637	B1	*	4/2002	Atchinson et al.
6,394,623	B1	*	5/2002	Tsui
6,577,072	B1	*	6/2003	Saito et al.
6,582,103	B1	*	6/2003	Popovich et al.
6,621,222	B1	*	9/2003	Hong

362/219	315/187	362/240
315/185 R	362/222	362/183
362/234	340/815.45	315/185 S
362/488	40/546	439/232
362/555	362/249	315/185 R
362/307	315/51	

OTHER PUBLICATIONS

Web page at http://trucklite.com/leds14.html printed on Jan. 13, 2000.
Web page at http://trucklite.com/leds2.html printed on Jan. 13, 2000.
Web page at http://trucklite.com/leds4.html printed on Jan. 13, 2000.
Web page at http://www.telecite.com/en/products/options_en.htm printed on Jan. 13, 2000.
Web page at http://www.dialight.com/trans.htm printed on Jan. 13, 2000.
Web page at http://www.ledlights.com/replac.htm printed on Jan. 13, 2000.
Ledtronics, apparently 1996 Catalog, apparently cover page and p. 10.

* cited by examiner

Primary Examiner—Wilson Lee
Assistant Examiner—Chuc Tran
(74) *Attorney, Agent, or Firm*—Young & Basile, P.C.

(57) **ABSTRACT**

The present invention provides a light tube for illumination by a power supply circuit including a bulb portion and a pair of end caps disposed at opposite ends of the bulb portion. A plurality of light emitting diodes are disposed inside the bulb portion and in electrical communication with the pair of end caps for illuminating in response to electrical current to be received from the power supply circuit.

26 Claims, 10 Drawing Sheets

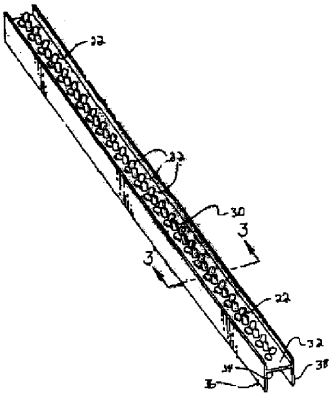

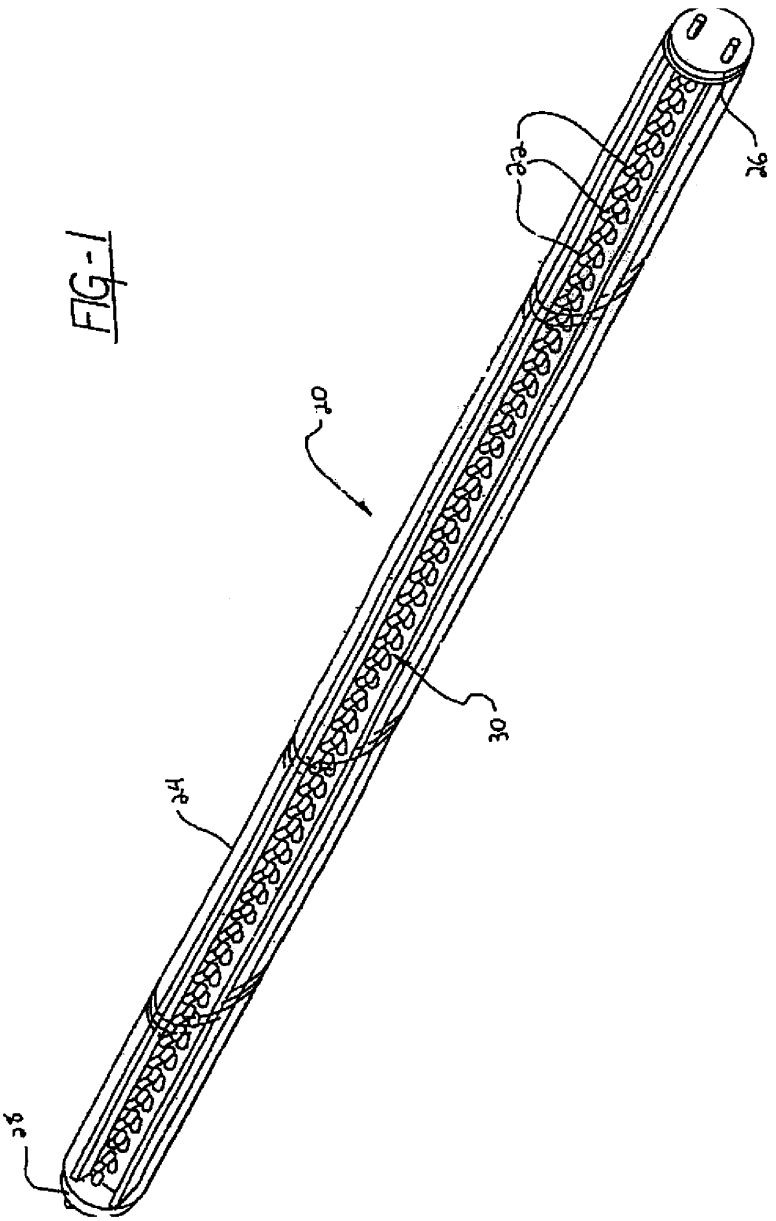

FIG-1

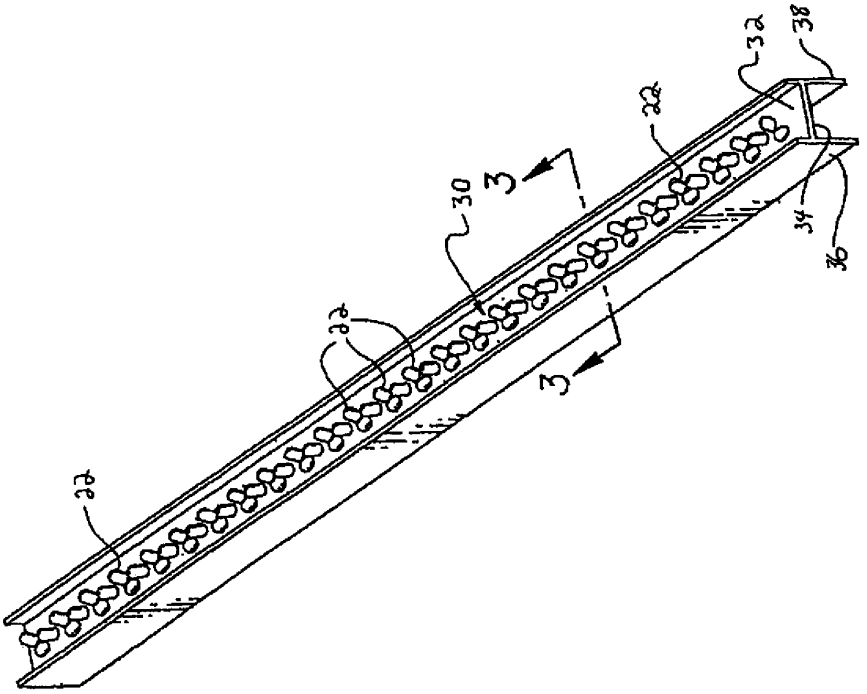

FIG-2

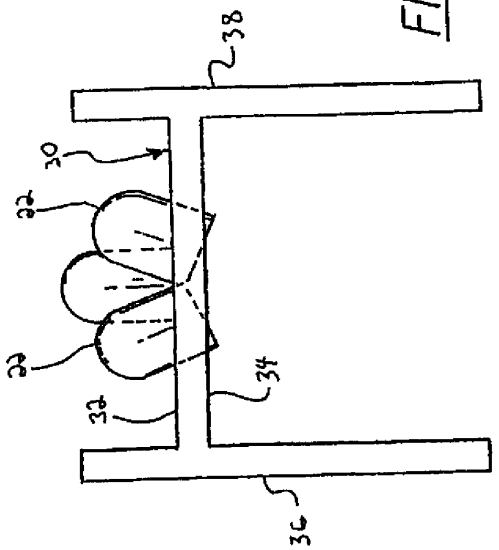

FIG-3

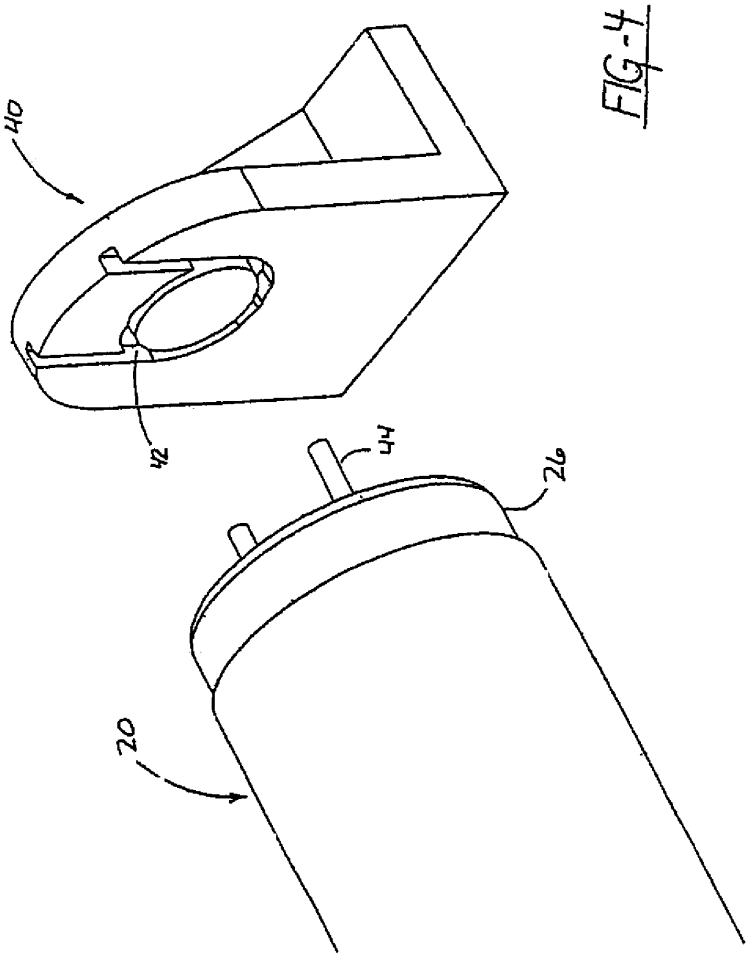

FIG-4

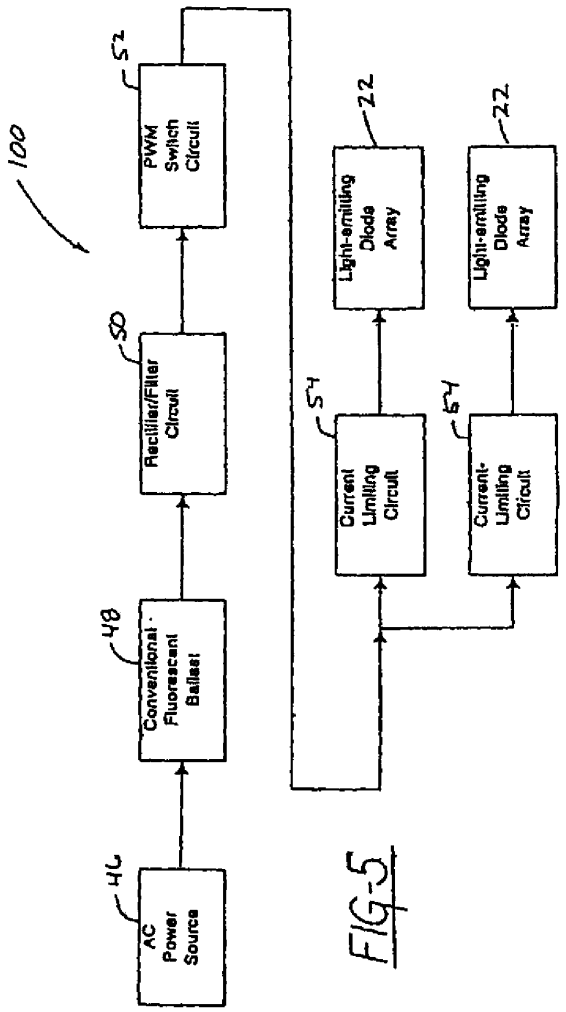
100
46
AC Power Source
48
Conventional Fluorescent Ballast
50
Rectifier/Filter Circuit
52
PWM Switch Circuit
54
Current Limiting Circuit
54
Current-Limiting Circuit
22
Light-emitting Diode Array
22
Light-emitting Diode Array

FIG-5

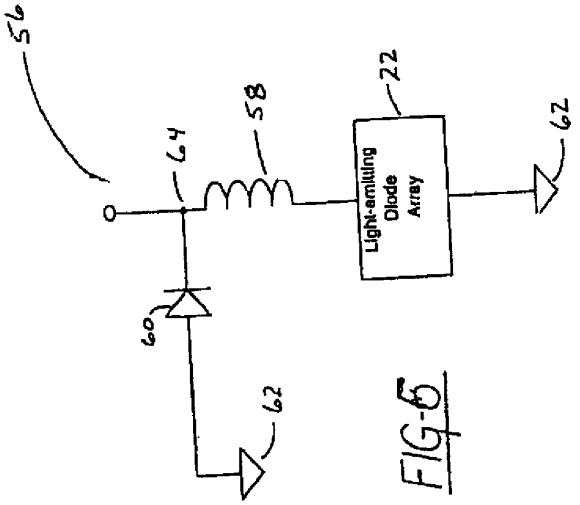

FIG-5

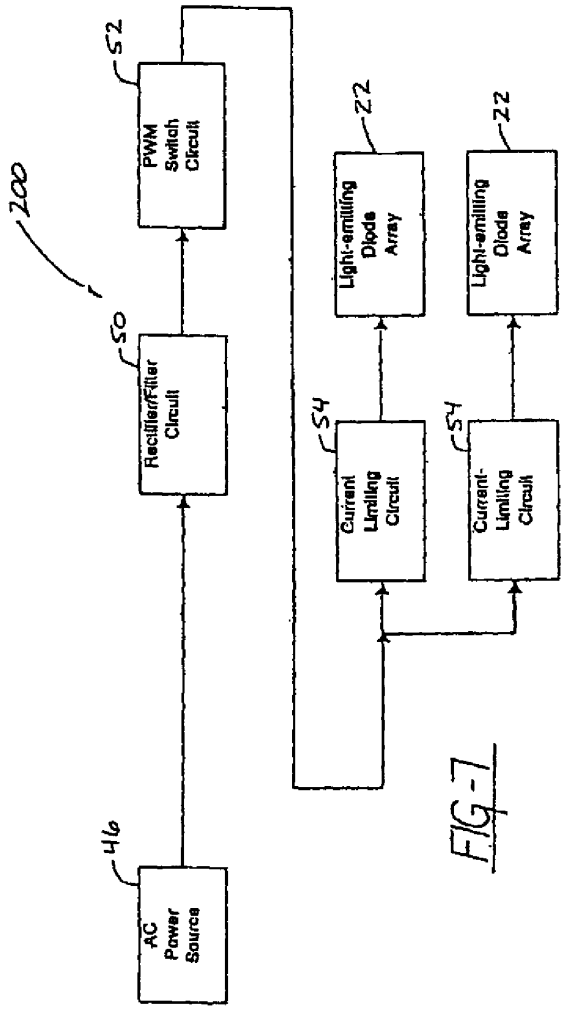
200
46
AC Power Source
50
Rectifier/Filter Circuit
52
PWM Switch Circuit
54
Current Limiting Circuit
54
Current-Limiting Circuit
22
Light-emitting Diode Array
22
Light-emitting Diode Array

FIG-7

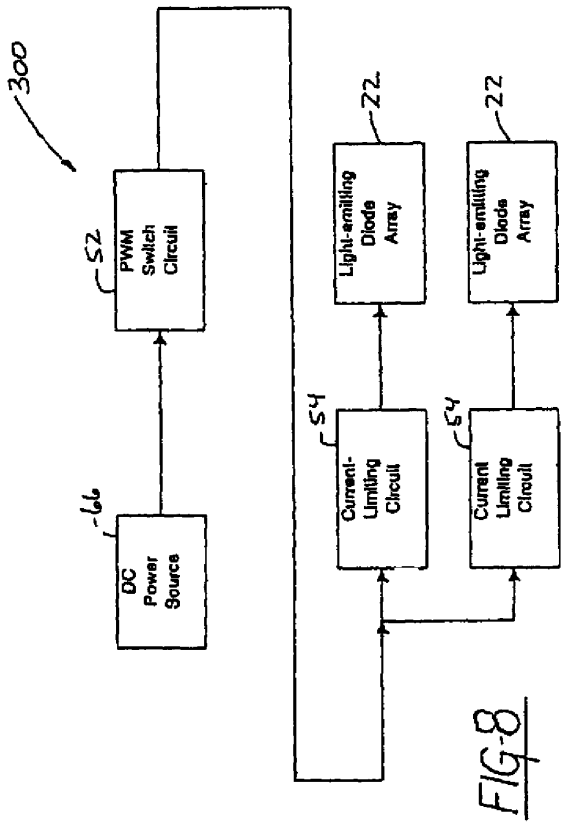
300
52
PWM Switch Circuit
66
DC Power Source
54
Current-Limiting Circuit
22
Light-emitting Diode Array
54
Current Limiting Circuit
22
Light-emitting Diode Array

FIG-8

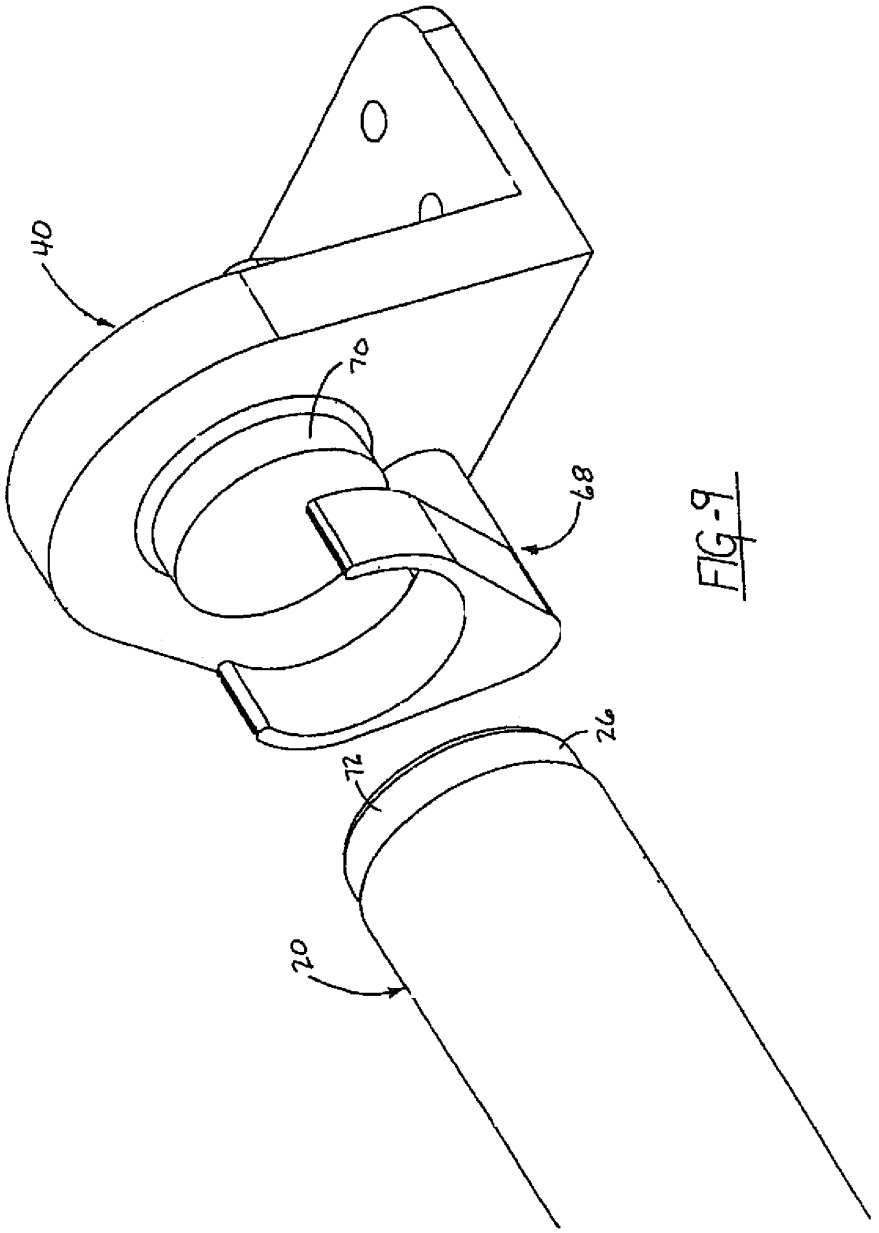

FIG-9

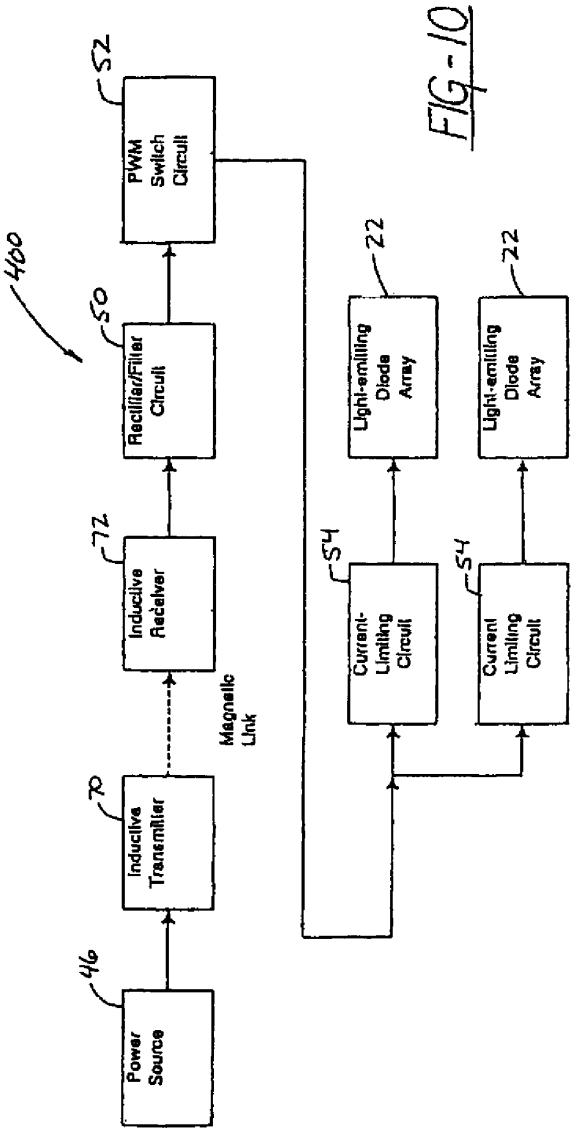
460
46
Power Source
Inductive Transmitter
Magnetic Link
72
Inductive Receiver
50
Rectifier/Filter Circuit
52
PWM Switch Circuit
54
Current-Limiting Circuit
22
Light-emitting Diode Array
54
Current Limiting Circuit
22
Light-emitting Diode Array

FIG-10

UNITED STATES PATENT AND TRADEMARK OFFICE
Certificate

Patent No. 7,049,761 B2

Patented: May 23, 2006

On petition requesting issuance of a certificate for correction of inventorship pursuant to 35 U.S.C. 256, it has been found that the above identified patent, through error and without any deceptive intent, improperly sets forth the inventorship.

Accordingly, it is hereby certified that the correct inventorship of this patent is: Jos Timmermans, Dearborn, MI (US); Jean C. Raymond, Montreal (CA); and John Ivey, Farmington Hills, MI (US).

Signed and Sealed this Second Day of June 2009.

DOUGLAS W. OWENS
Supervisory Patent Examiner
Art Unit 2821