US 20030072156A1

(19) United States

(12) Patent Application Publication (10) Pub. No.: US 2003/0072156 A1

Pohlert et al. (43) Pub. Date: Apr. 17, 2003

(54) WIDE AREA LIGHTING APPARATUS AND EFFECTS SYSTEM

(75) Inventors: **Rudy G. Pohlert**, Calabasas, CA (US); **Pat Grosswendt**, Agoura, CA (US)

Correspondence Address:
IRELL & MANELLA LLP
1800 AVENUE OF THE STARS
SUITE 900
LOS ANGELES, CA 90067 (US)

(73) Assignee: **Contrast Lighting Services, Inc.**

(21) Appl. No.: **10/238,973**

(22) Filed: **Sep. 9, 2002**

Related U.S. Application Data

(63) Continuation-in-part of application No. 09/949,206, filed on Sep. 7, 2001.

Publication Classification

(51) **Int. Cl.**[7] **F21V 5/00**

(52) **U.S. Cl.** **362/244**; 362/231; 362/11; 362/800; 362/294

(57) **ABSTRACT**

A lighting effects system comprises an arrangement of lamp elements, such as light-emitting diodes (LEDs) or other light elements, on a panel or frame. The panel or frame may be relatively lightweight, and may include one or more circuit boards for direct mounting of the lamp elements. The panel or frame may have an opening through which a camera can view. A mounting bracket and assembly may be used for attaching the panel or frame to a camera. The lamp elements may be electronically controllable so as to provide differing intensity levels, collectively, individually, or in designated groups, and may be strobed, dimmed or otherwise controlled according to manually selected or programmable patterns. Different color lamp elements may be mounted on the same panel/frame, and, in particular, daylight and tungsten colored lamp elements may be mounted on the same panel/frame and their relative intensities selectively controlled by control circuitry.

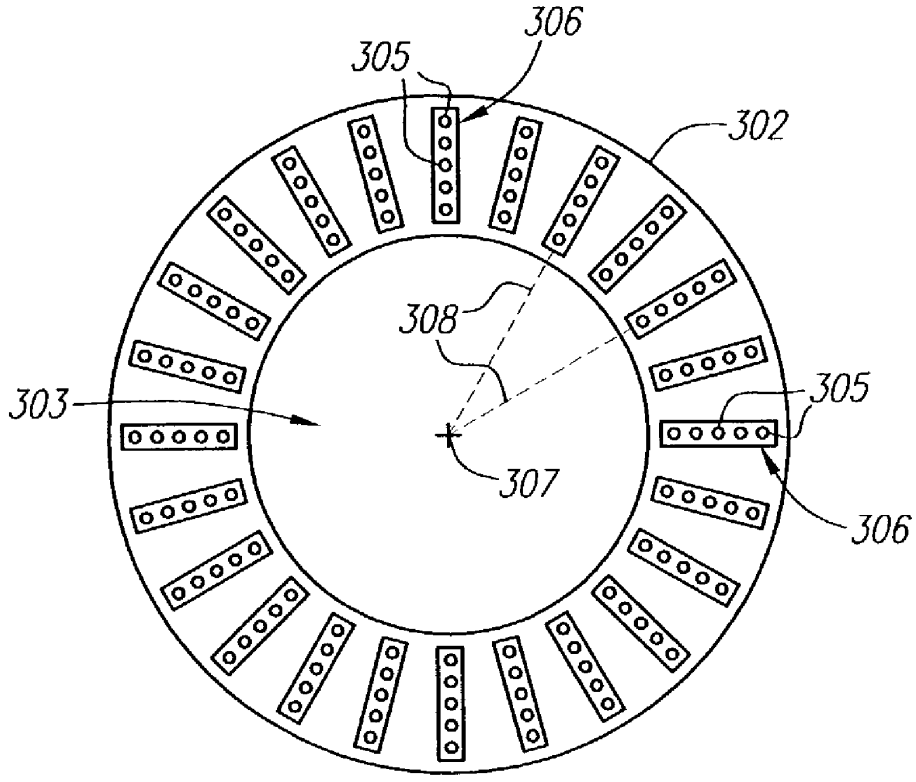

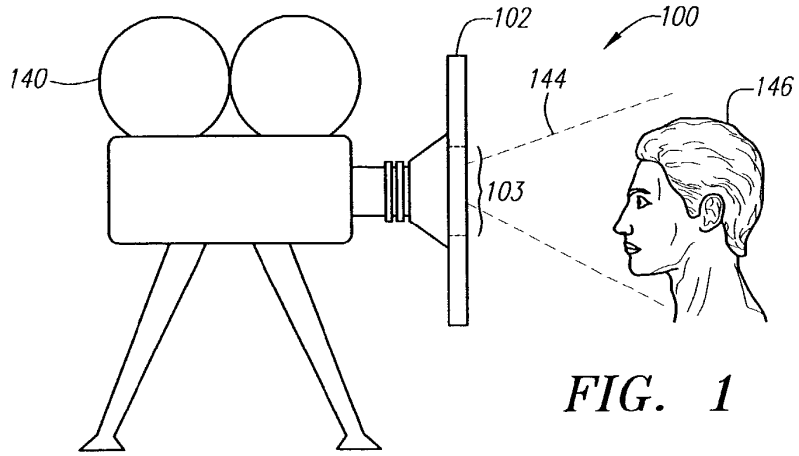

FIG. 1

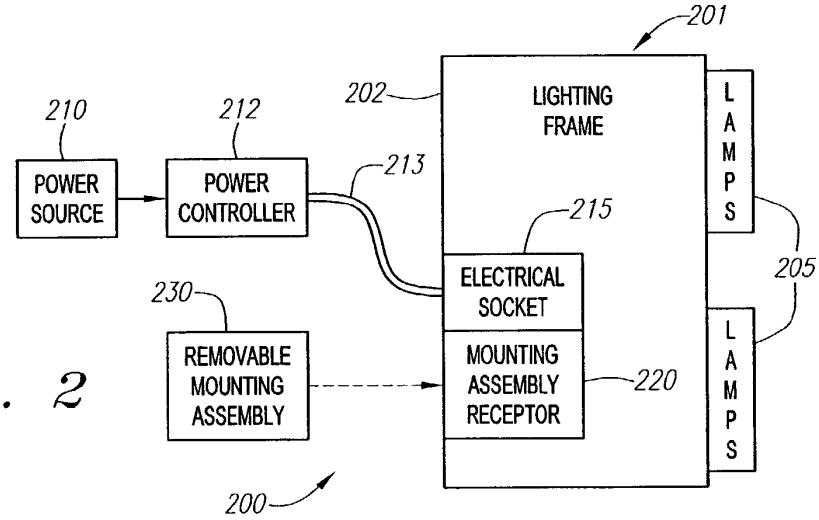

FIG. 2

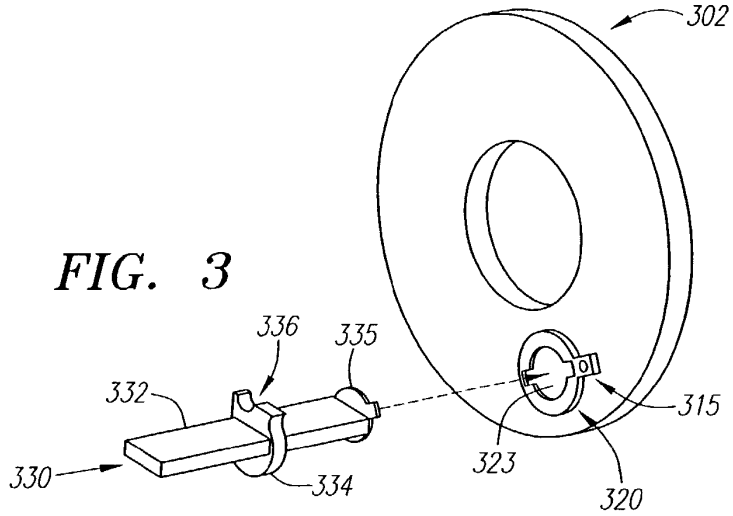

FIG. 3

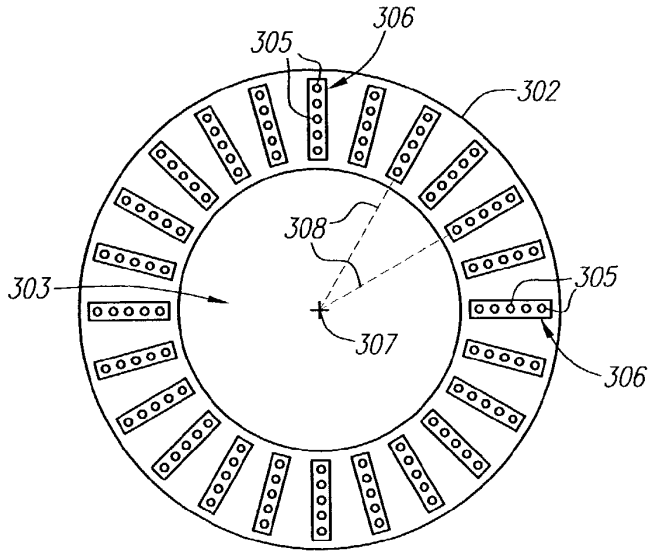

FIG. 4

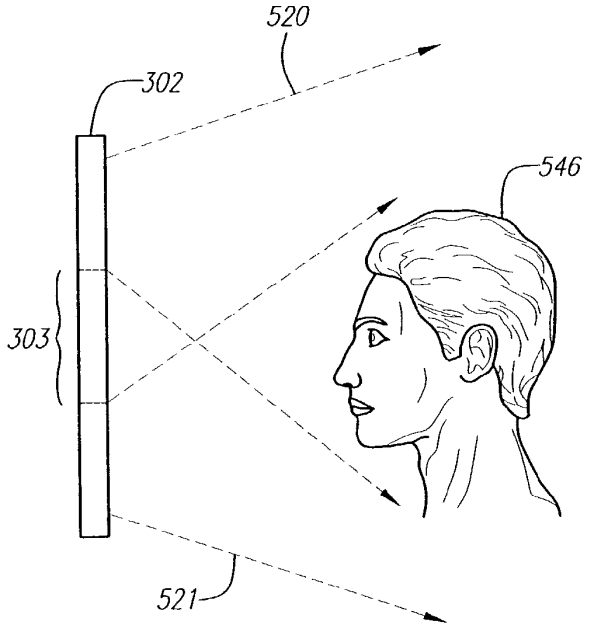

FIG. 5

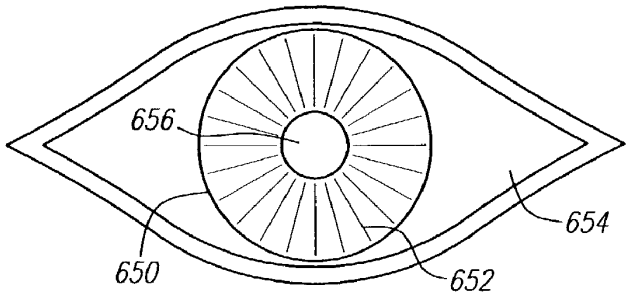

FIG. 6

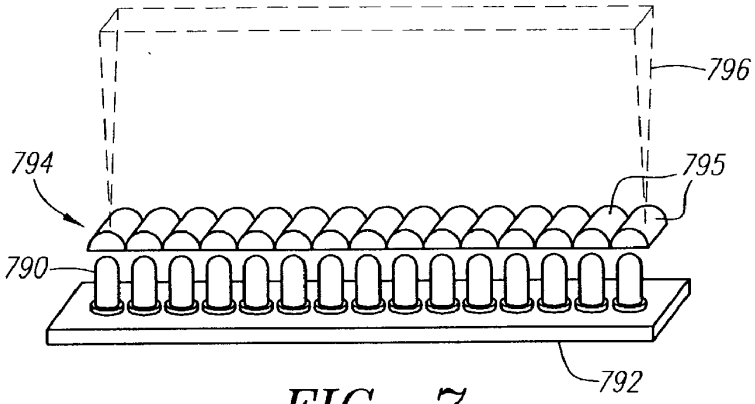

FIG. 7

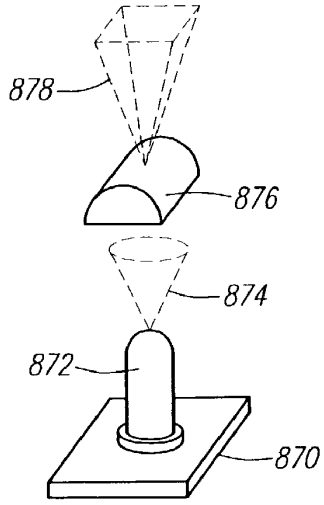

FIG. 8

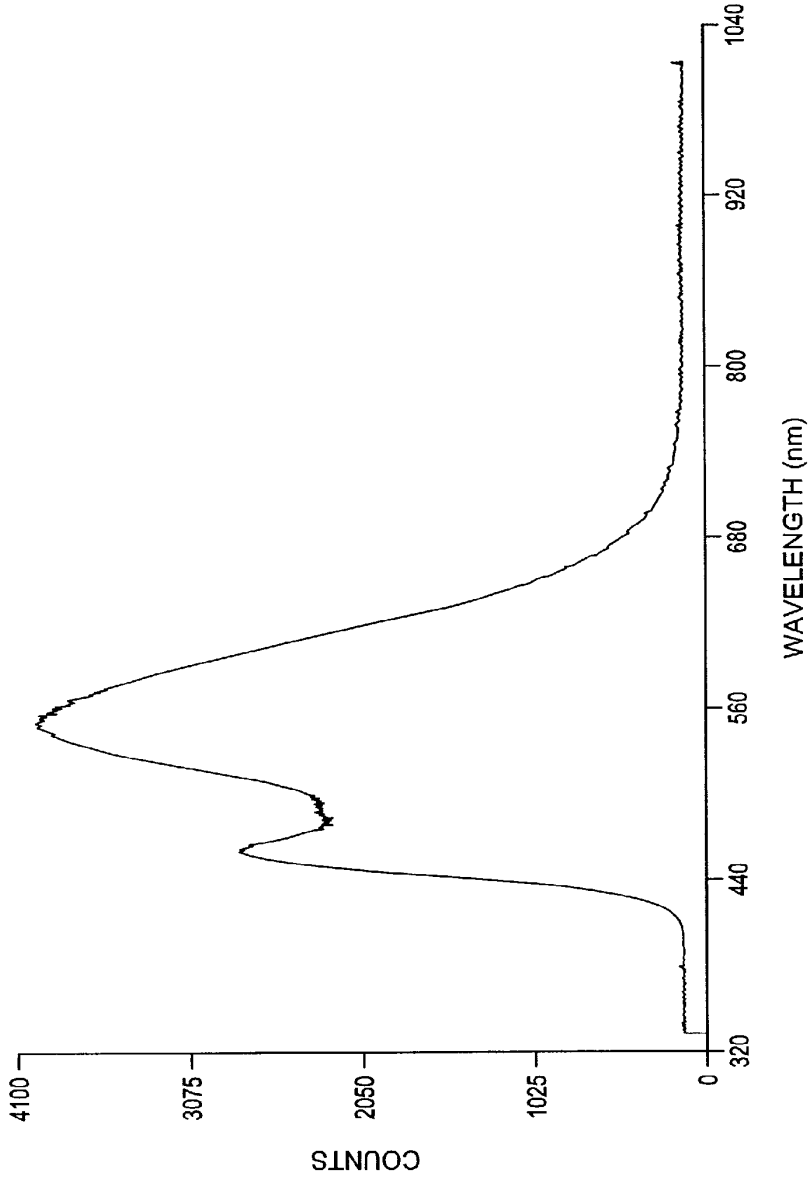
COUNTS
4100
3075
2050
1025
0
320
440
560
680
800
920
1040
WAVELENGTH (nm)

FIG. 9

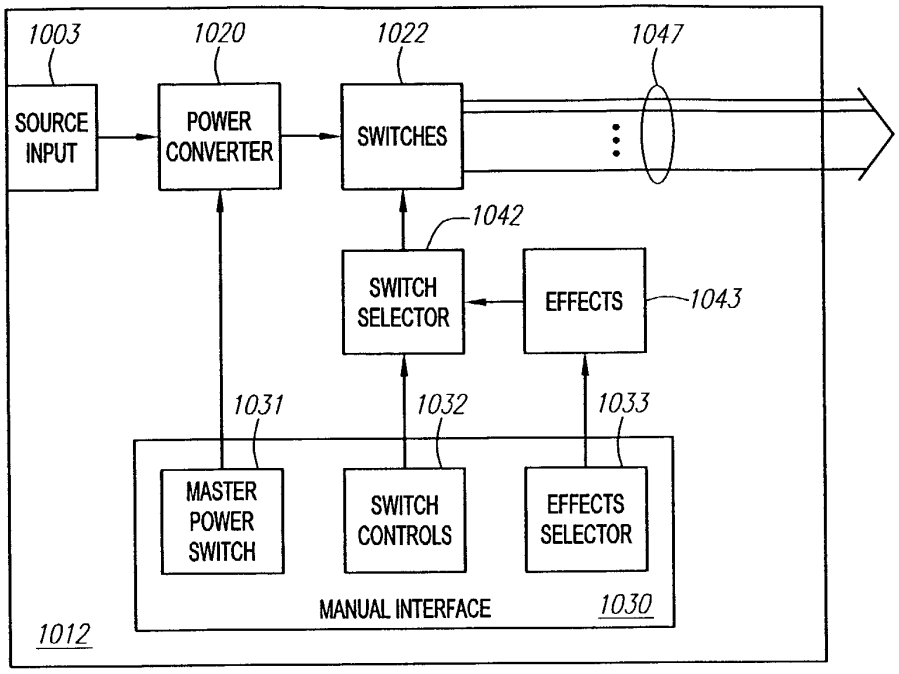

FIG. 10A

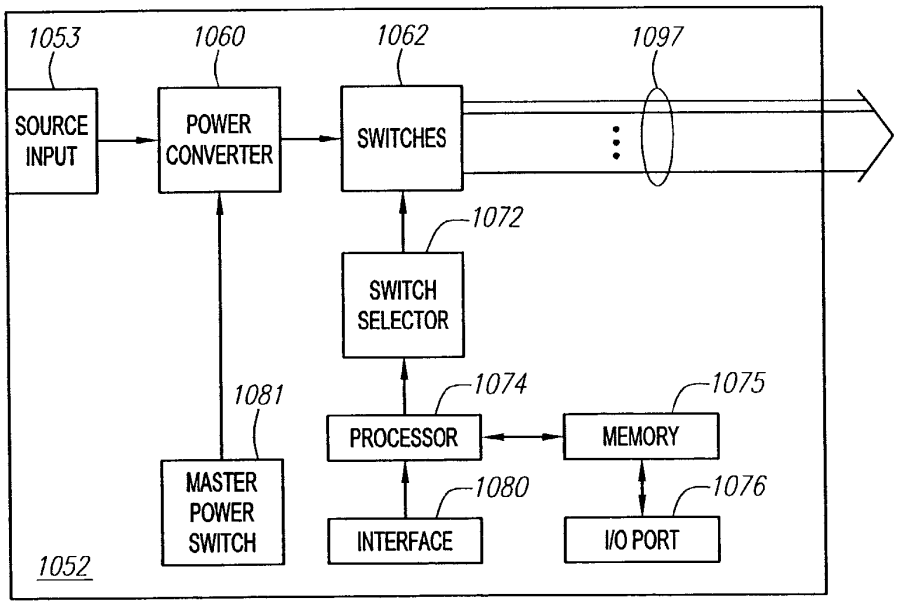

FIG. 10B

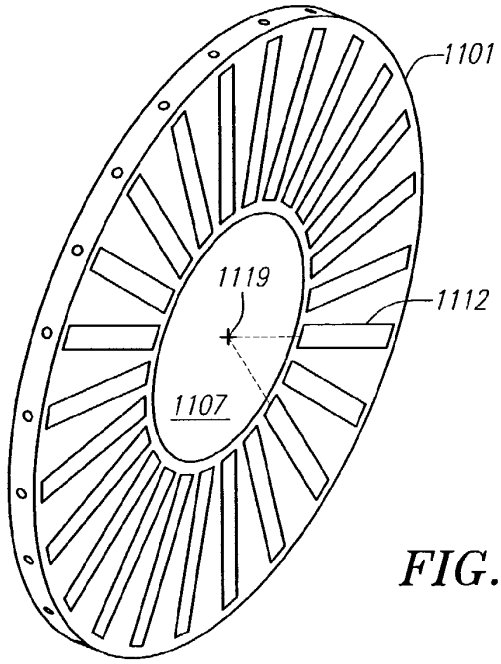

FIG. 11

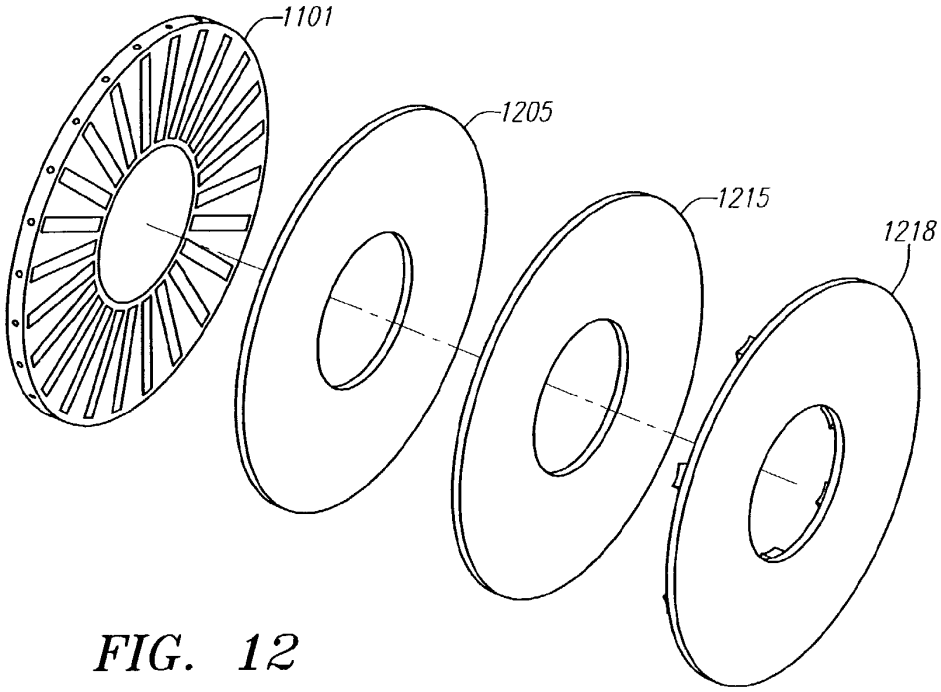

FIG. 12

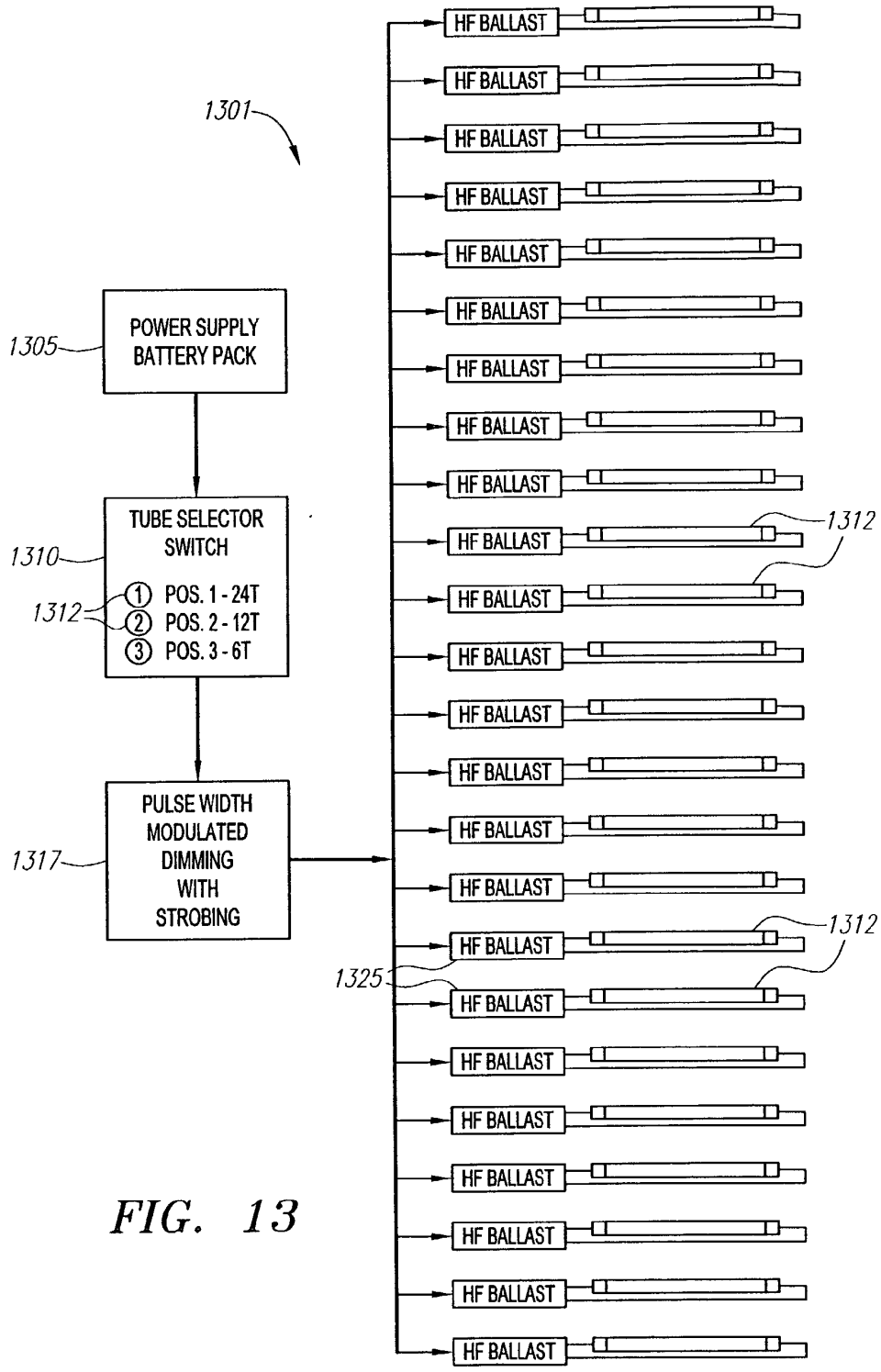
1301
1305
POWER SUPPLY BATTERY PACK
1310
TUBE SELECTOR SWITCH
1312
① POS. 1 - 24T
② POS. 2 - 12T
③ POS. 3 - 6T
1317
PULSE WIDTH MODULATED DIMMING WITH STROBING
HF BALLAST
1312
1325

FIG. 13

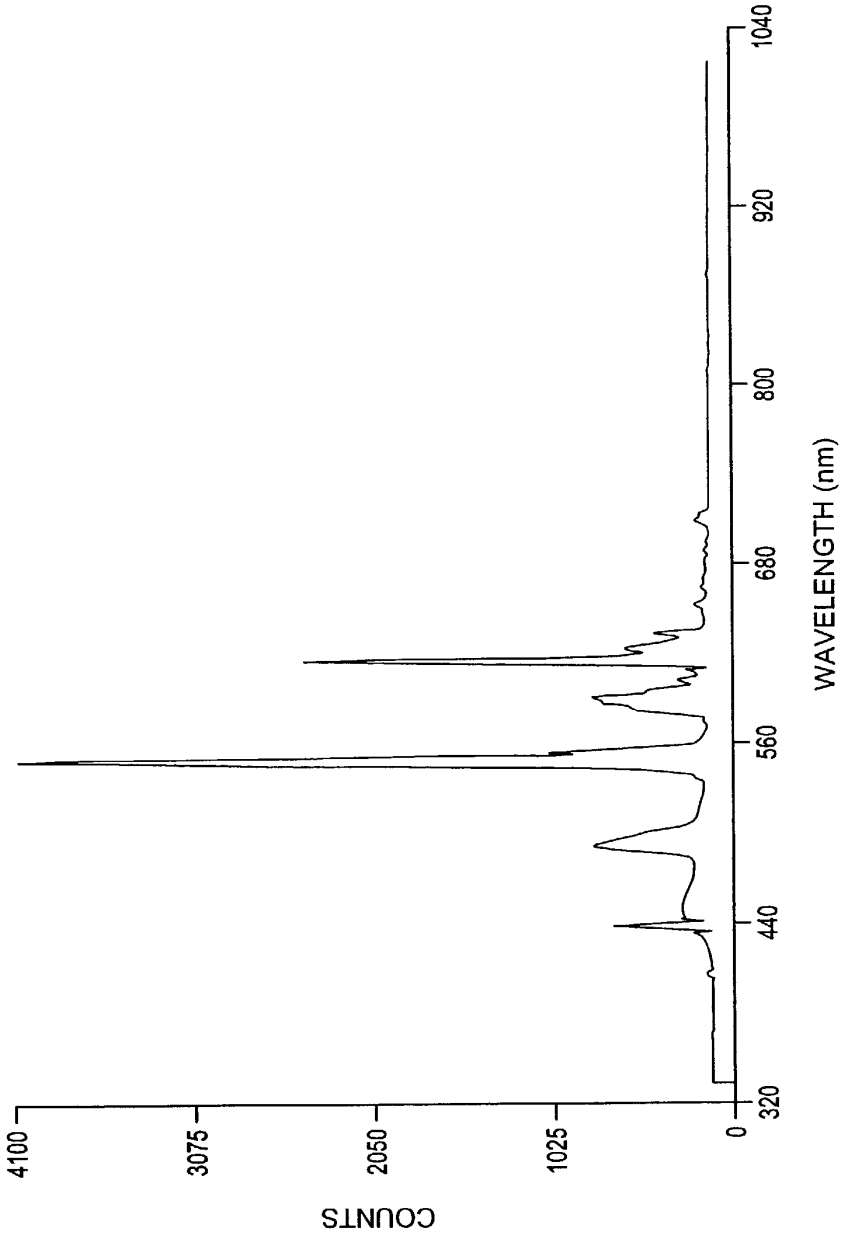
COUNTS
4100
3075
2050
1025
0
320
440
560
680
800
920
1040
WAVELENGTH (nm)

FIG. 14

FIG. 15A

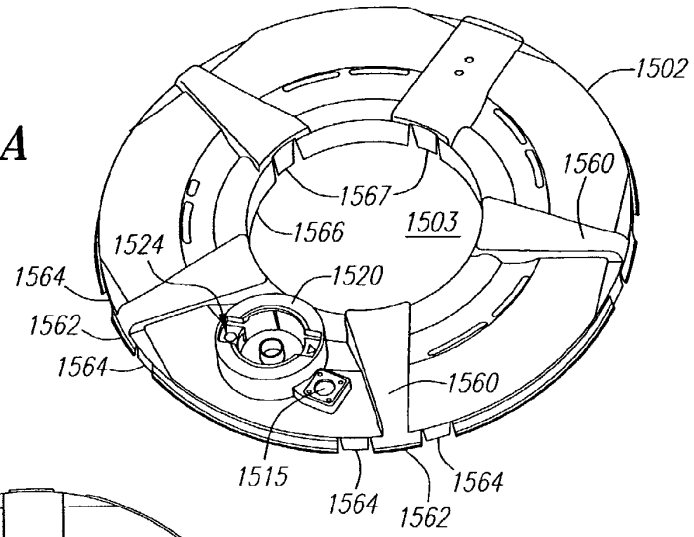

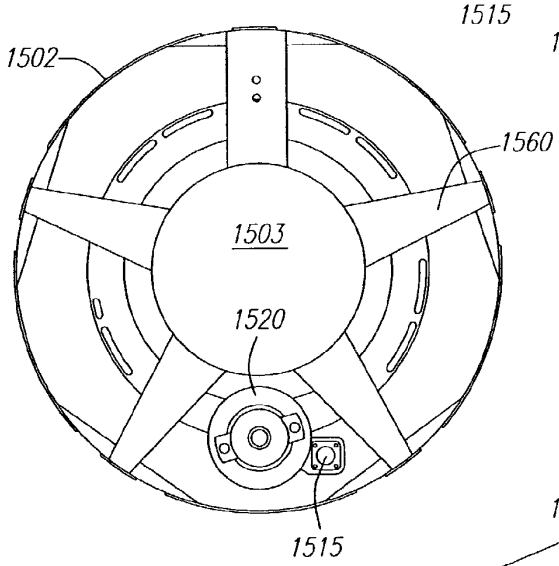

FIG. 15B

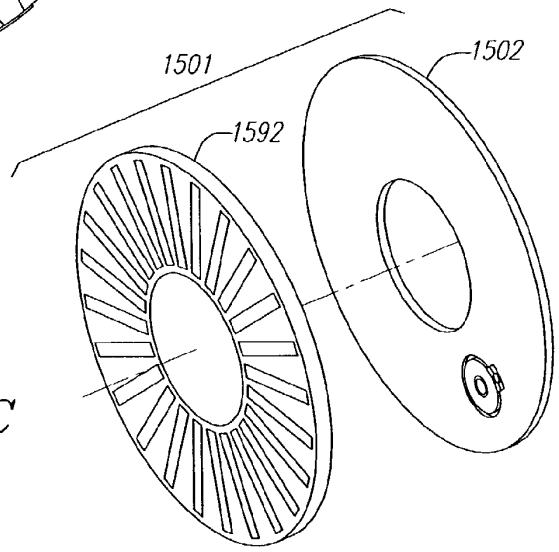

FIG. 15C

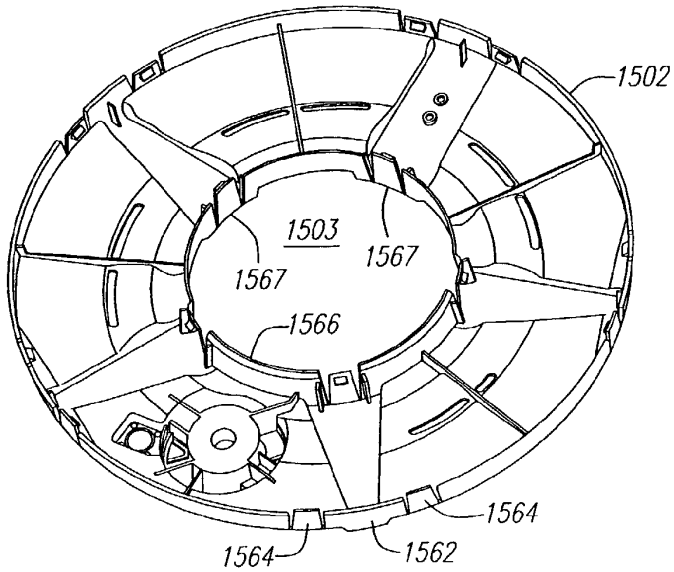

FIG. 16A

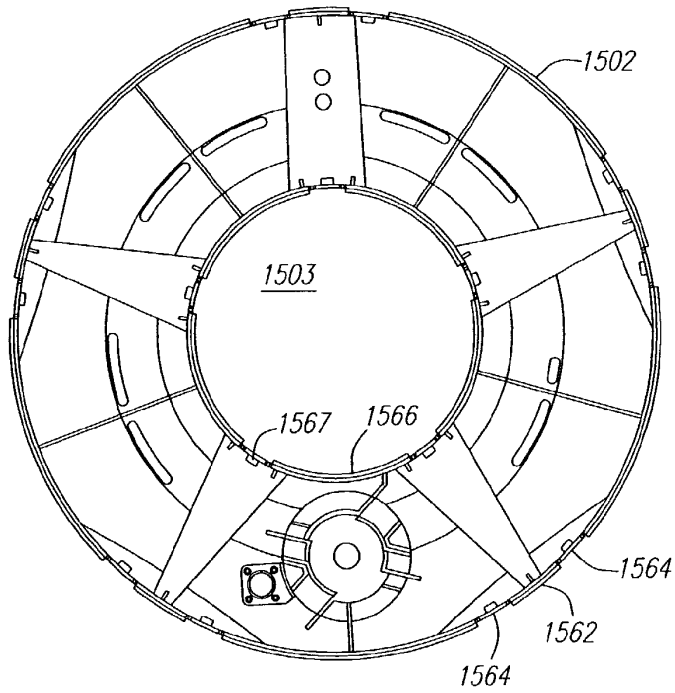

FIG. 16B

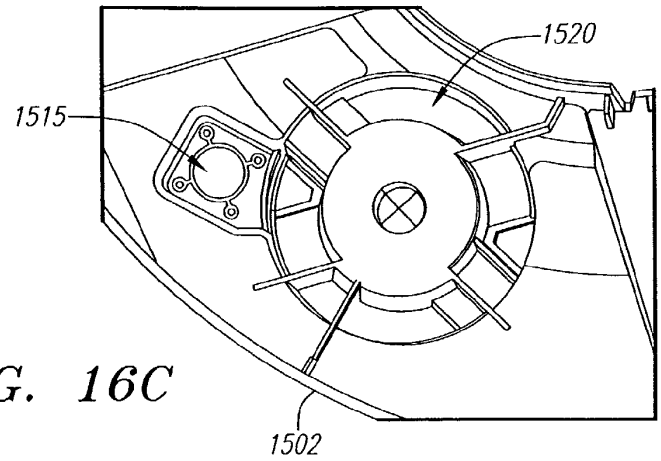

FIG. 16C

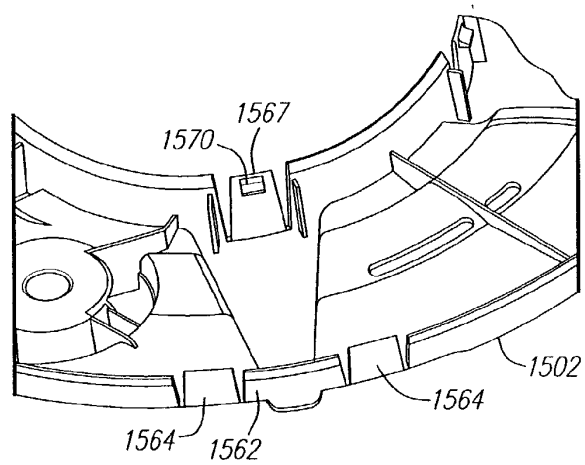

FIG. 16D

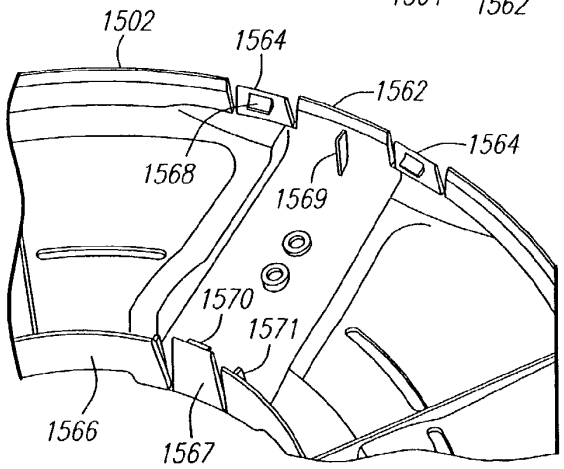

FIG. 16E

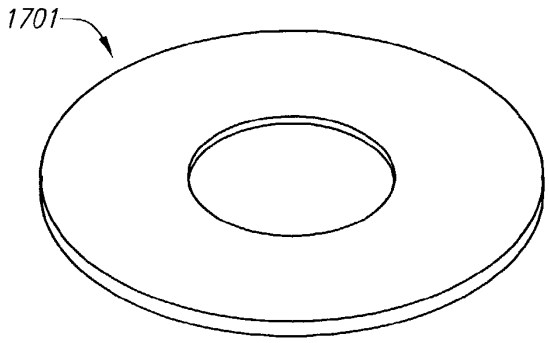

FIG. 17

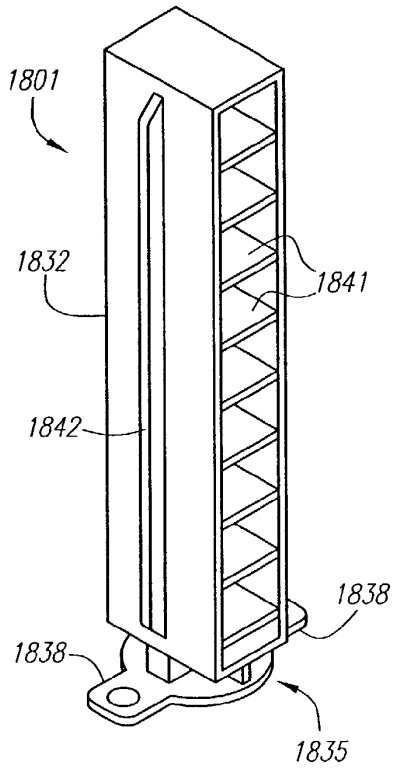

FIG. 18

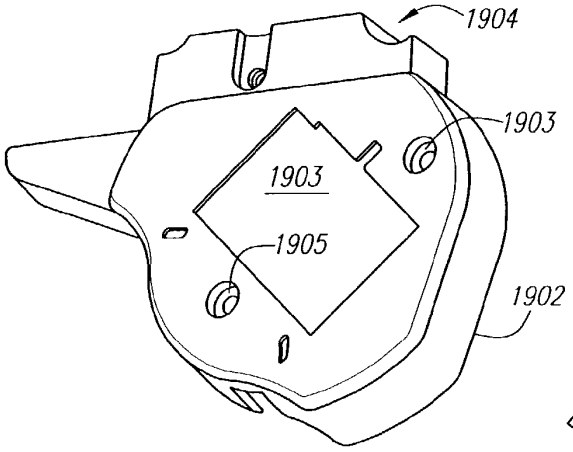

FIG. 19A

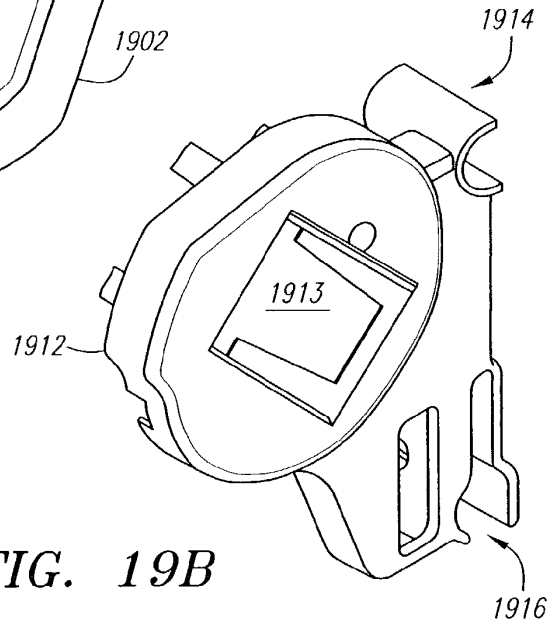

FIG. 19B

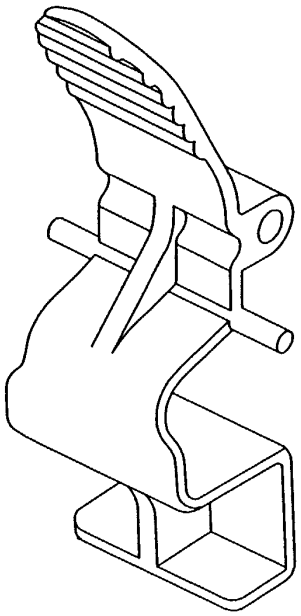

FIG. 20

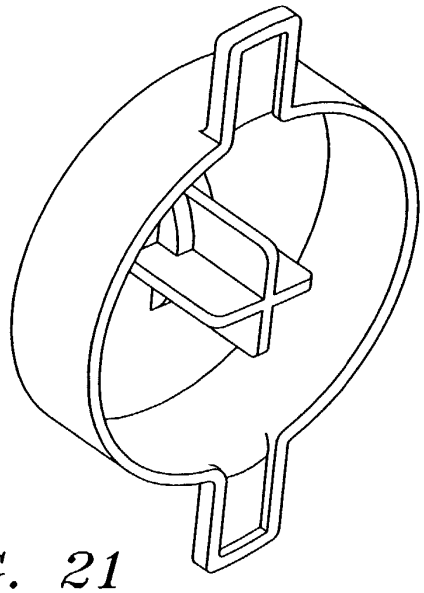

FIG. 21

FIG. 22

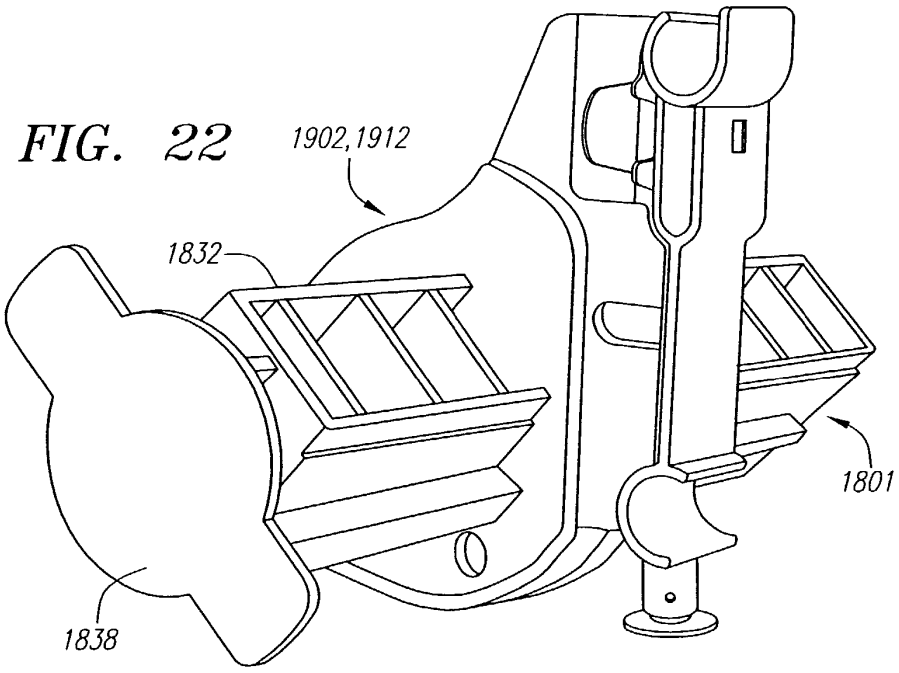

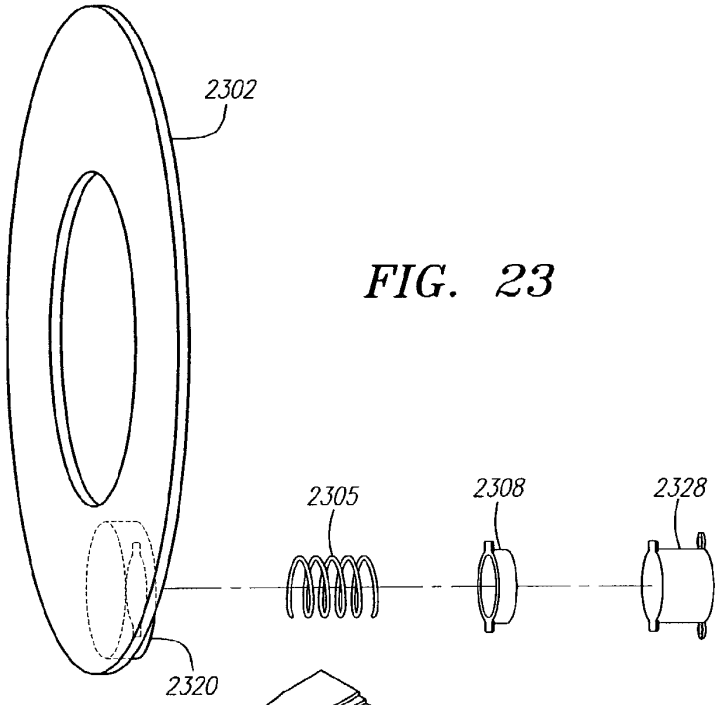

FIG. 23

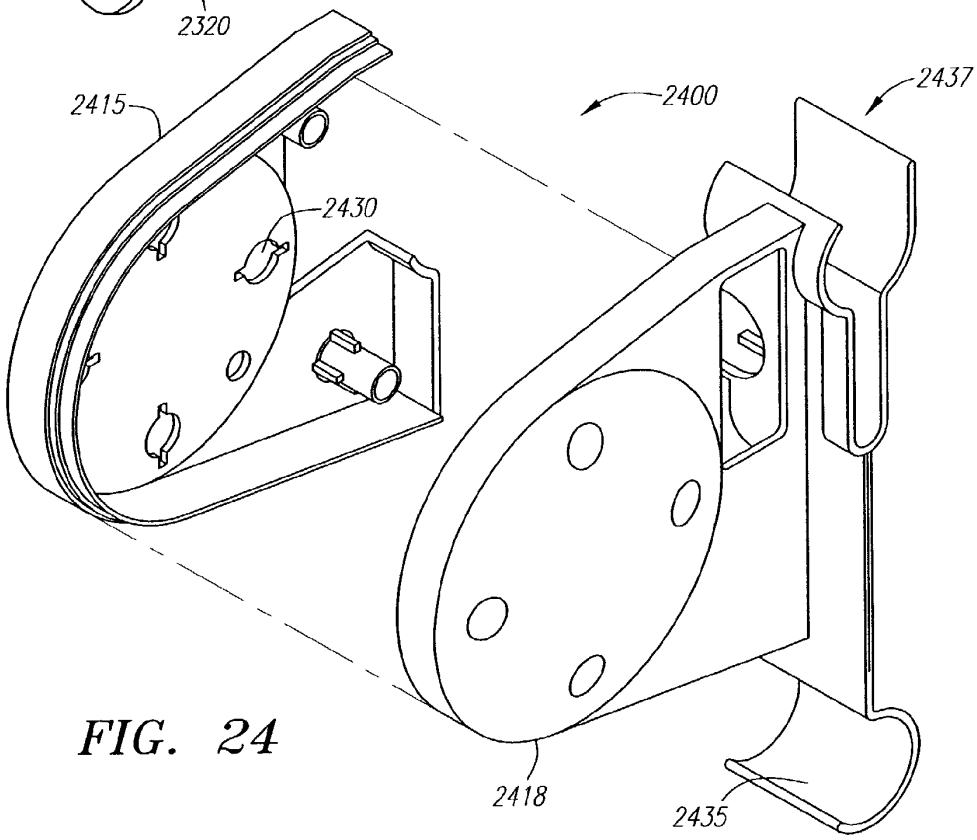

FIG. 24

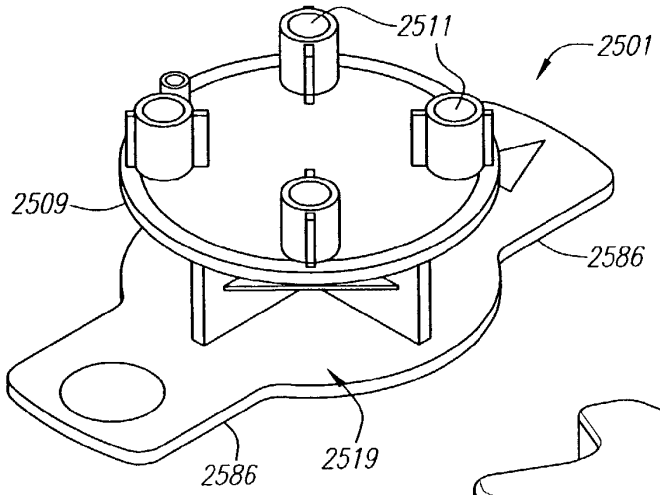

FIG. 25

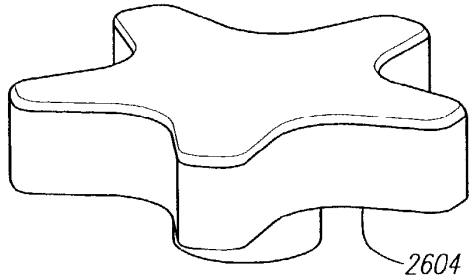

FIG. 26

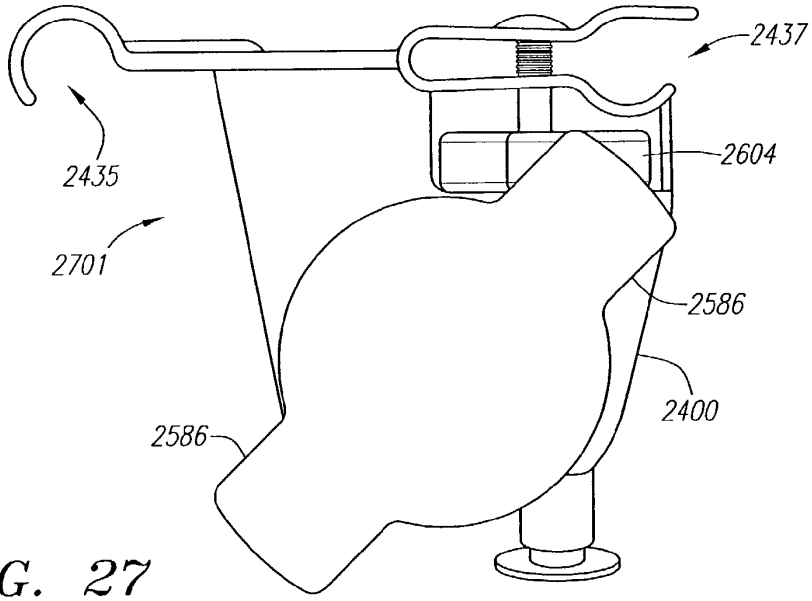

FIG. 27

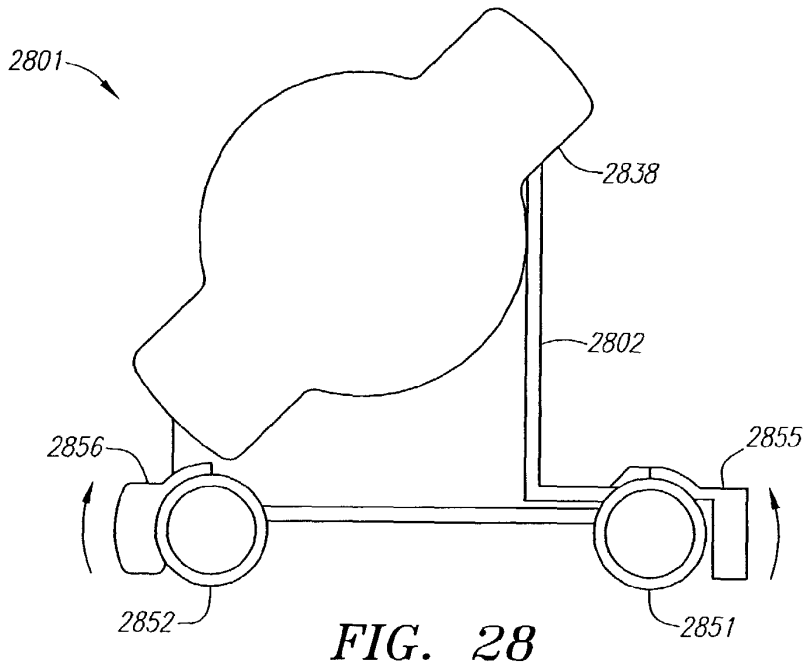
2801
2838
2802
2856
2855
2852
2851

FIG. 28

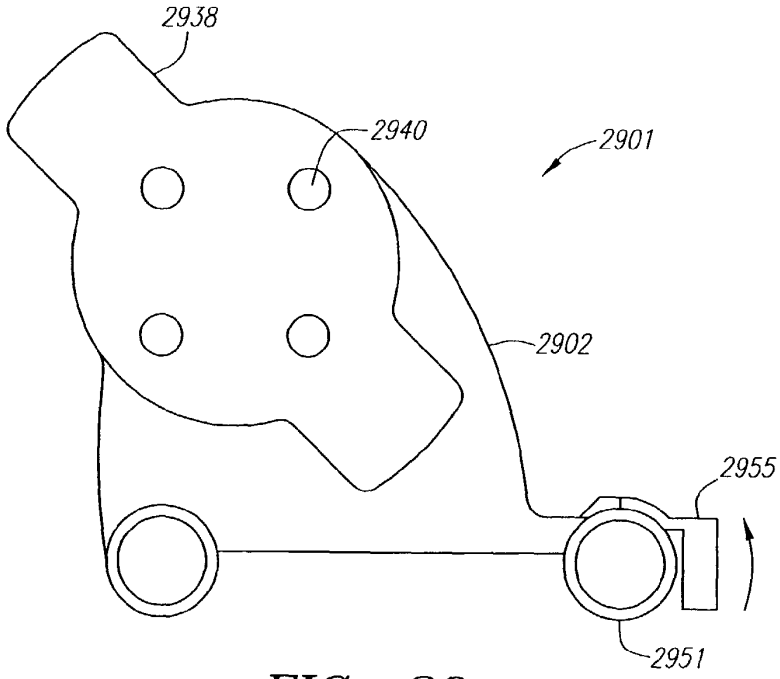
2938
2940
2901
2902
2955
2951

FIG. 29

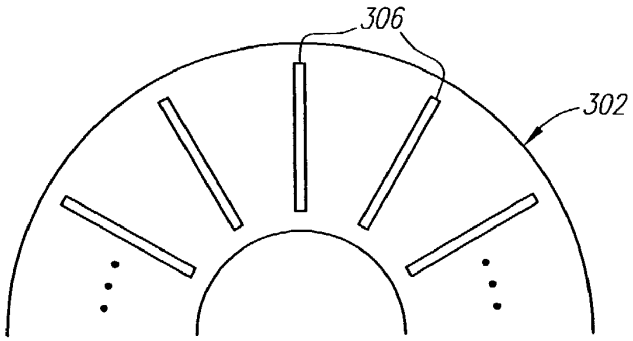

FIG. 30A

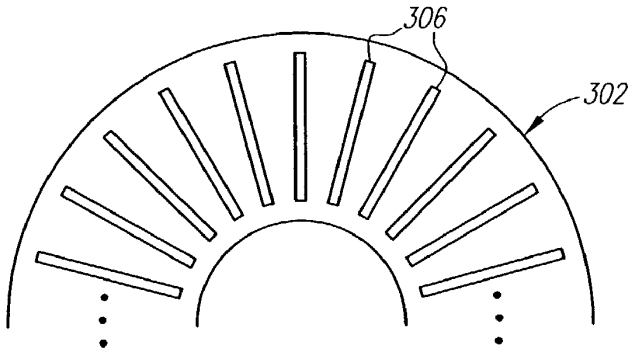

FIG. 30B

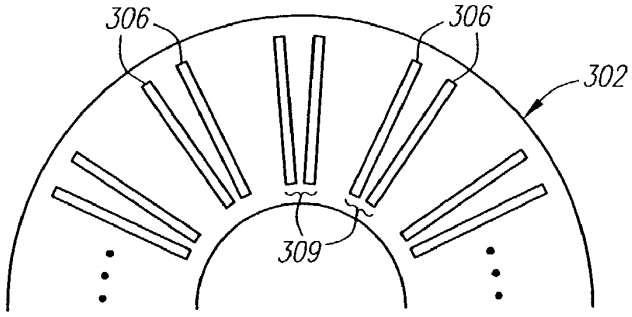

FIG. 30C

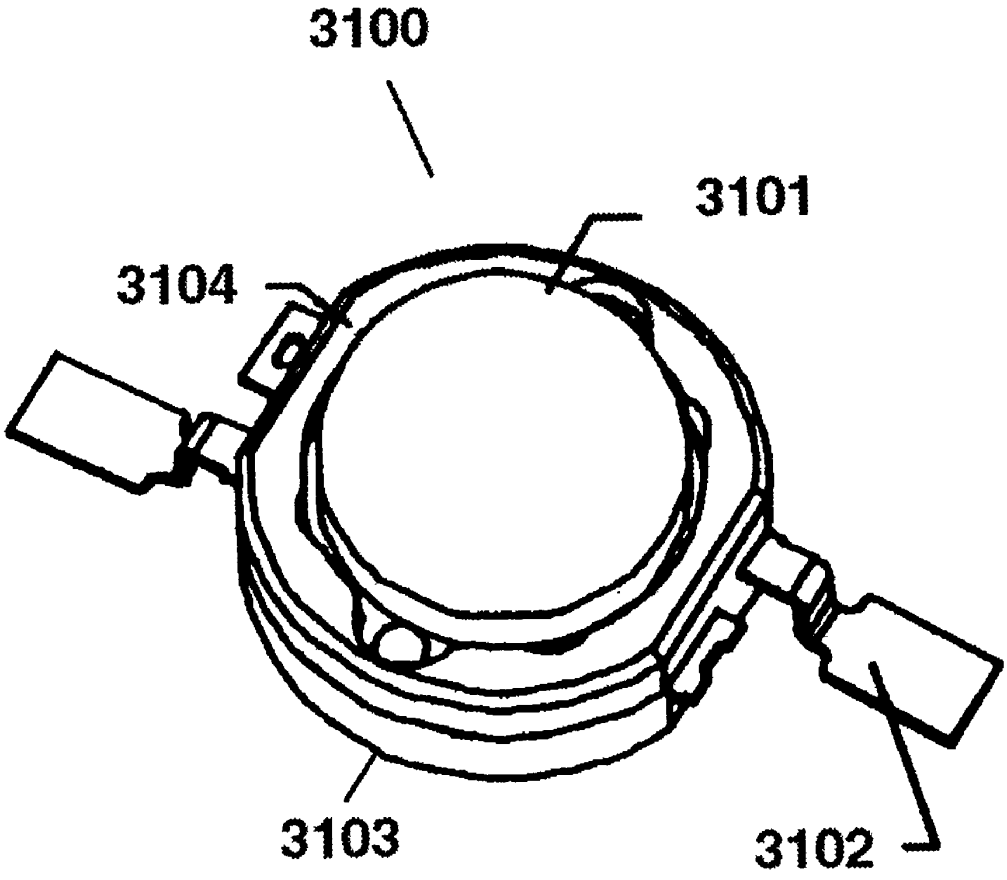

Fig. 31

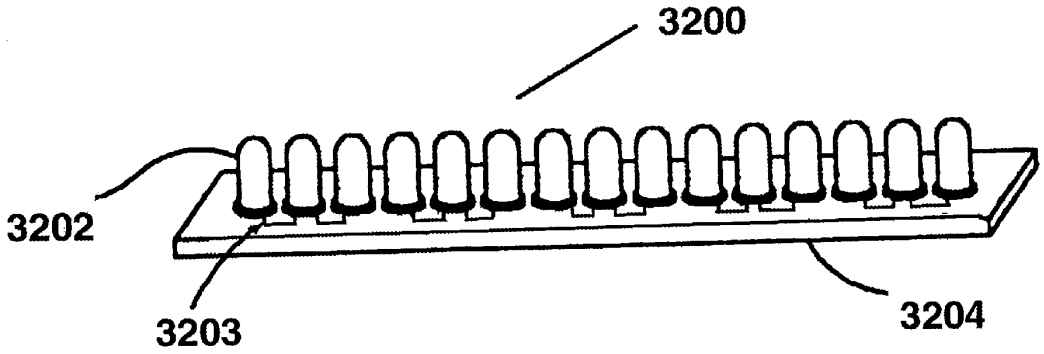

Fig. 32

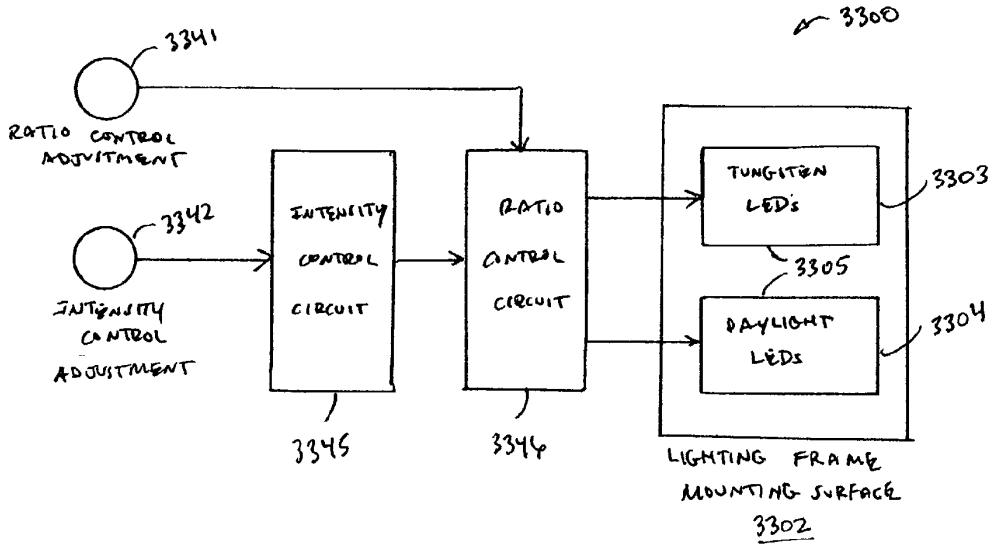
3300
3341
RATIO CONTROL ADJUSTMENT
3342
INTENSITY CONTROL ADJUSTMENT
INTENSITY CONTROL CIRCUIT
RATIO CONTROL CIRCUIT
TUNGSTEN LEDs
3303
3305
DAYLIGHT LEDs
3304
3345
3346
LIGHTING FRAME MOUNTING SURFACE
3302

FIG. 33

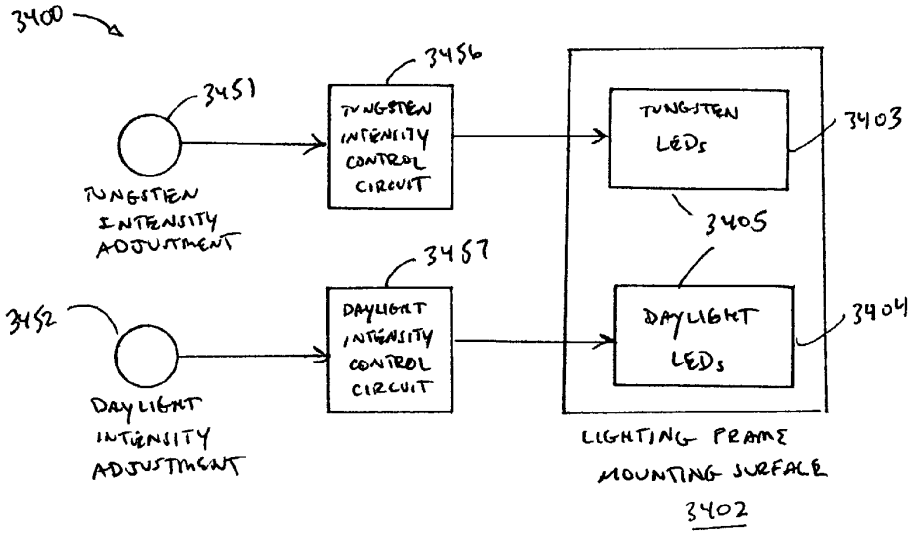
3400
3451
TUNGSTEN INTENSITY ADJUSTMENT
3456
TUNGSTEN INTENSITY CONTROL CIRCUIT
TUNGSTEN LEDs
3403
3405
3452
DAYLIGHT INTENSITY ADJUSTMENT
3457
DAYLIGHT INTENSITY CONTROL CIRCUIT
DAYLIGHT LEDs
3404
LIGHTING FRAME MOUNTING SURFACE
3402

FIG. 34

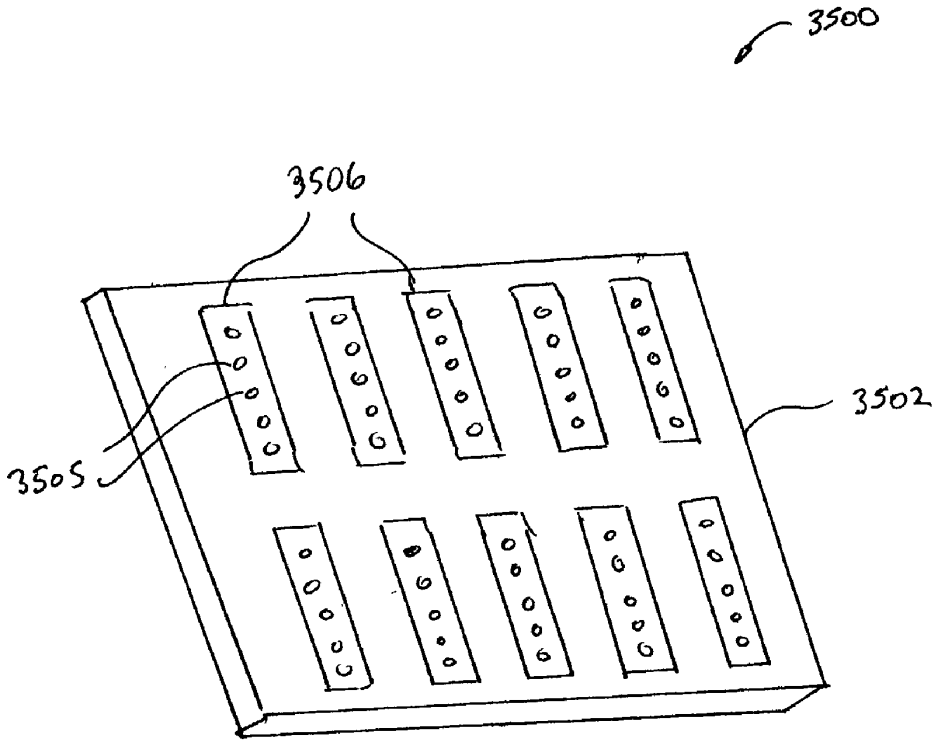

FIG. 35

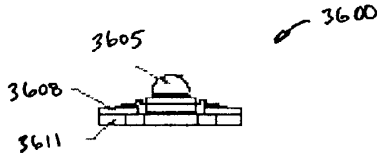

FIG. 36A

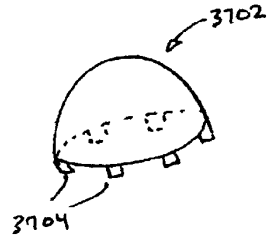

FIG. 37A

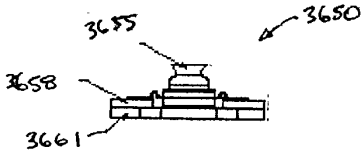

FIG. 36B

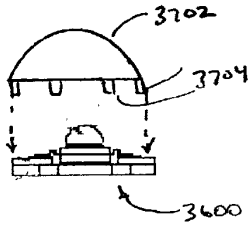

FIG. 37B

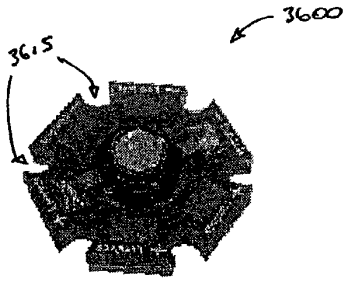

FIG. 36C

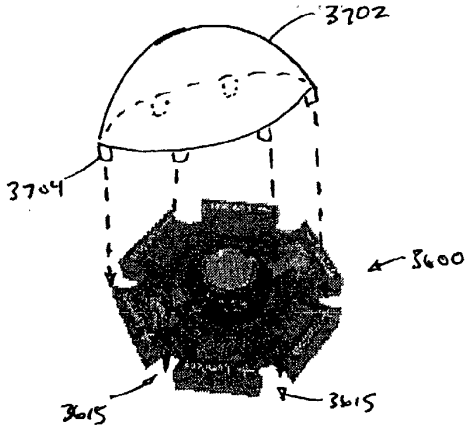

FIG. 37C

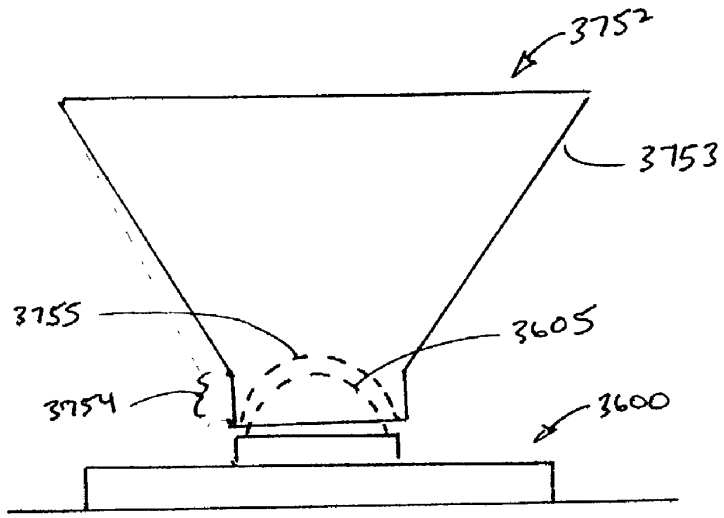

FIG. 37D

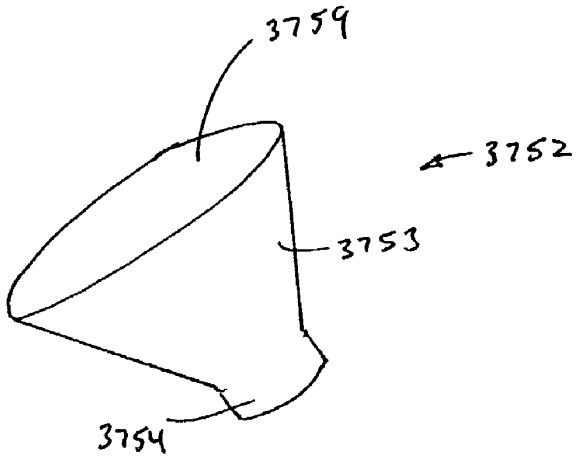

FIG. 37E

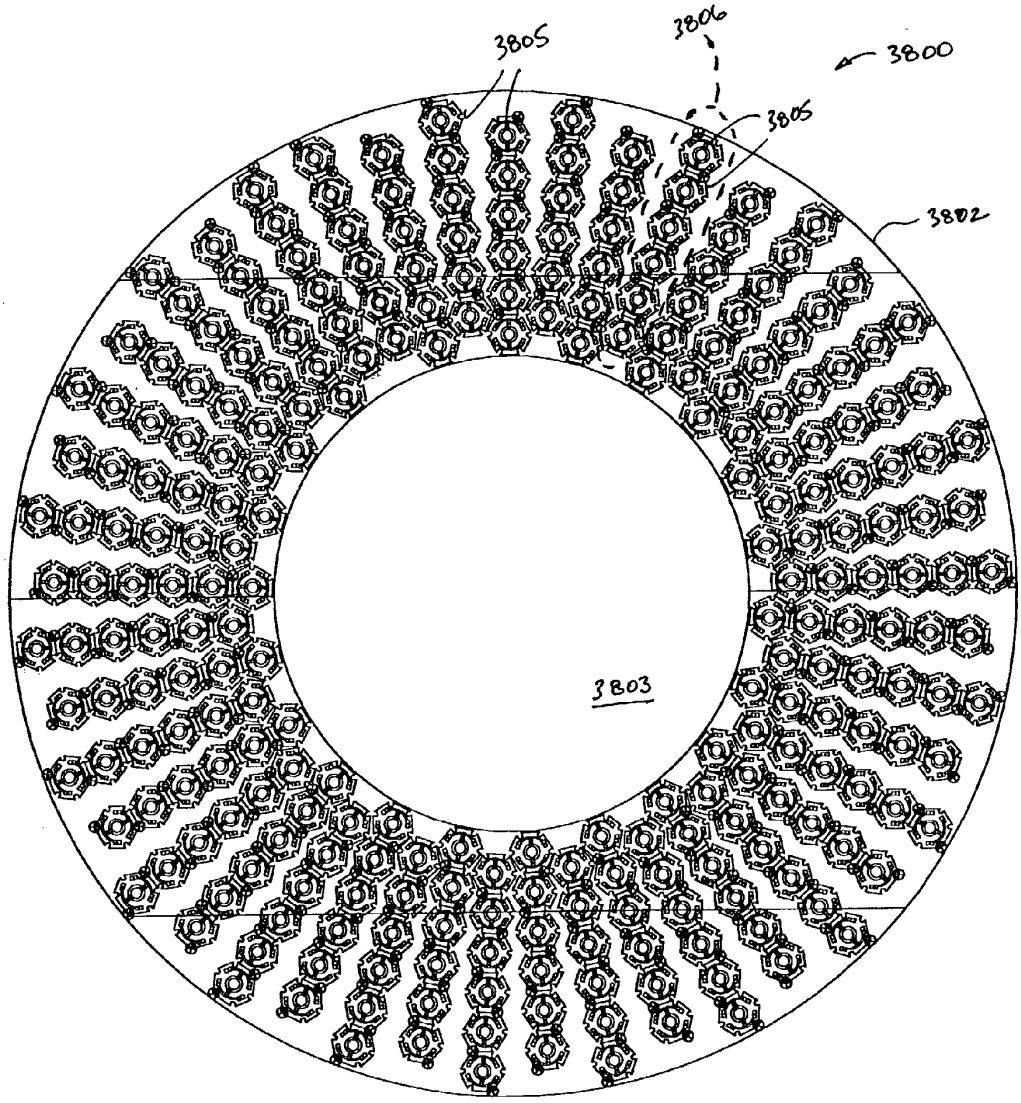

FIG. 38A

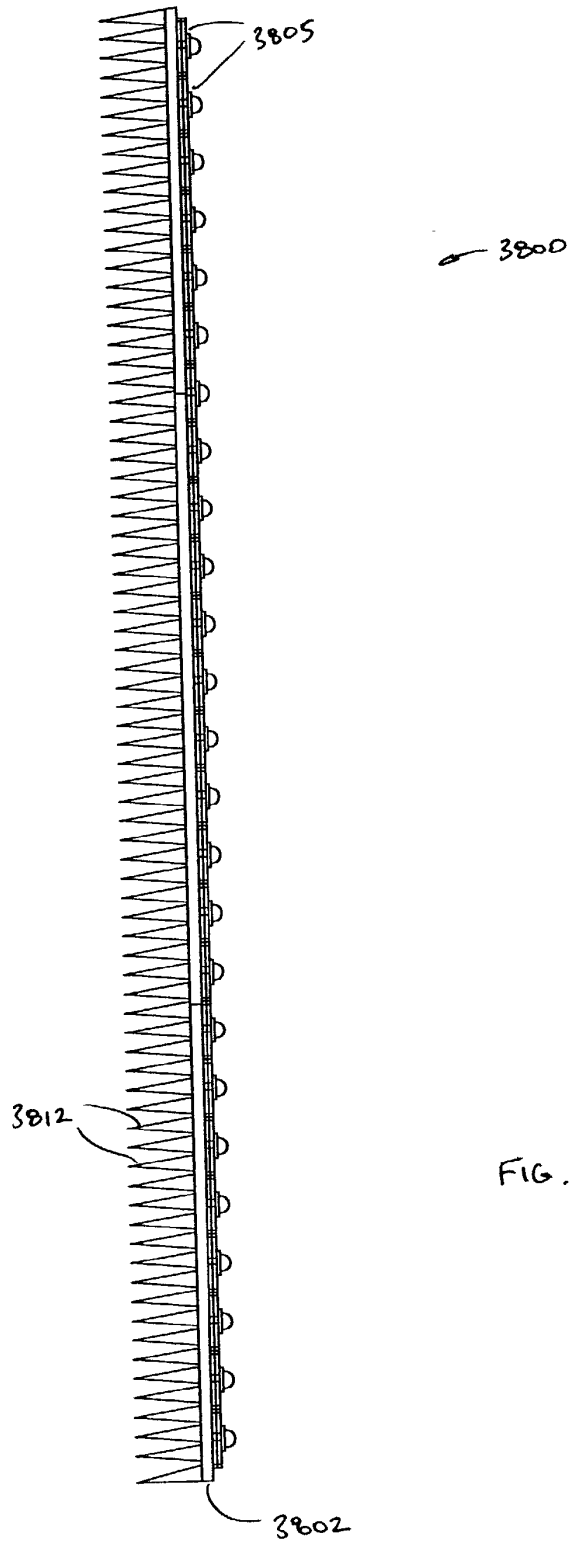

FIG. 38B

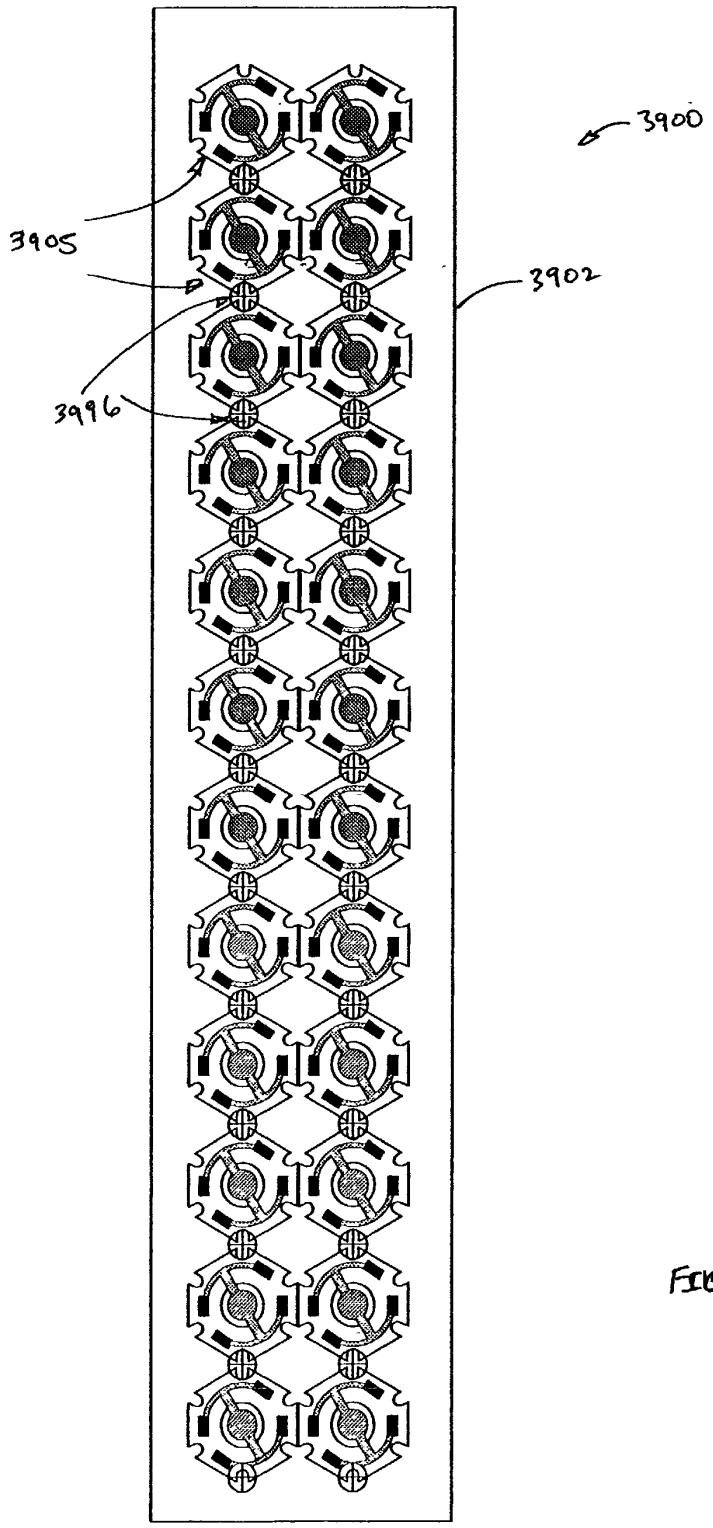

FIG. 39

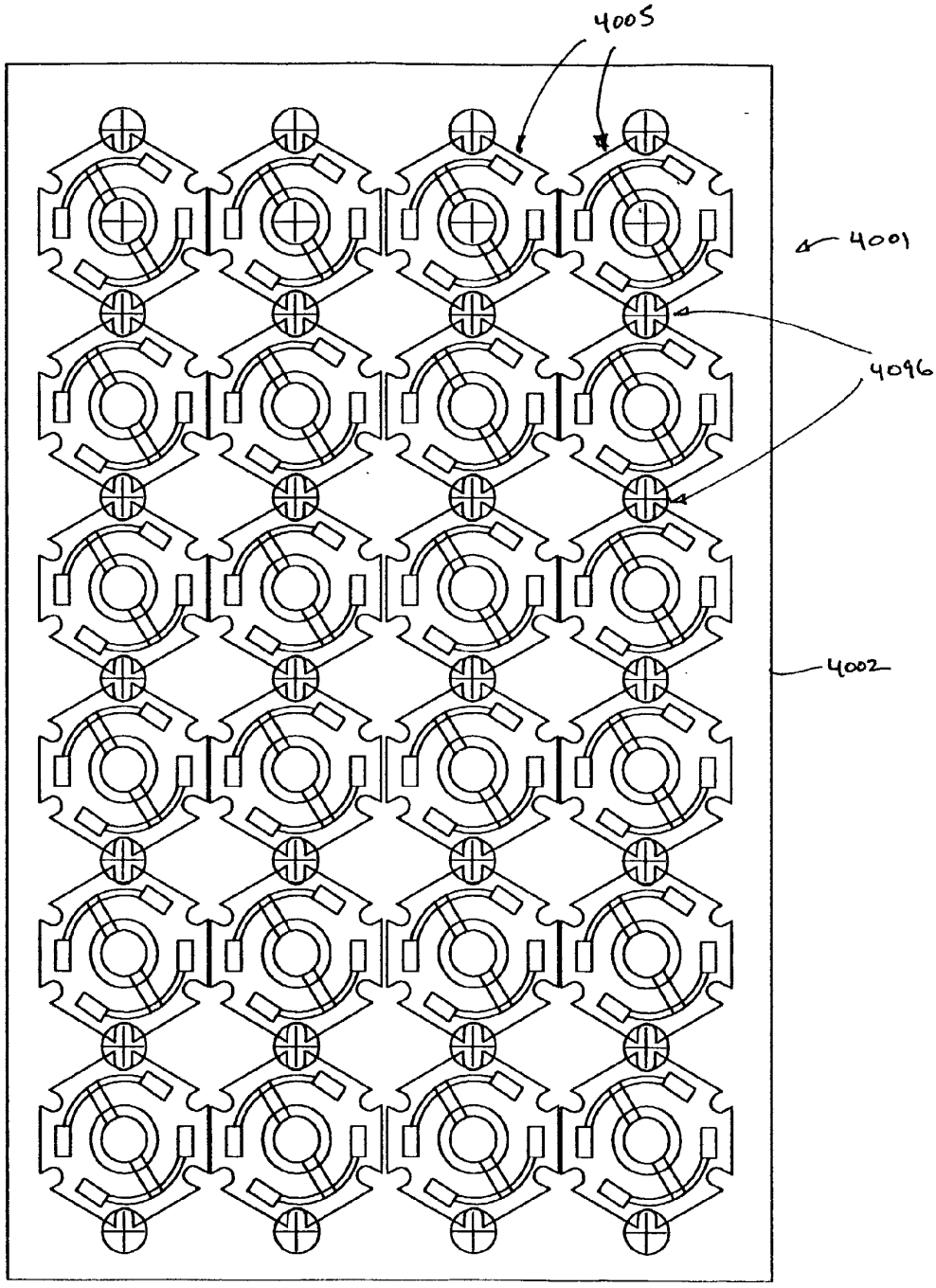

FIG. 40

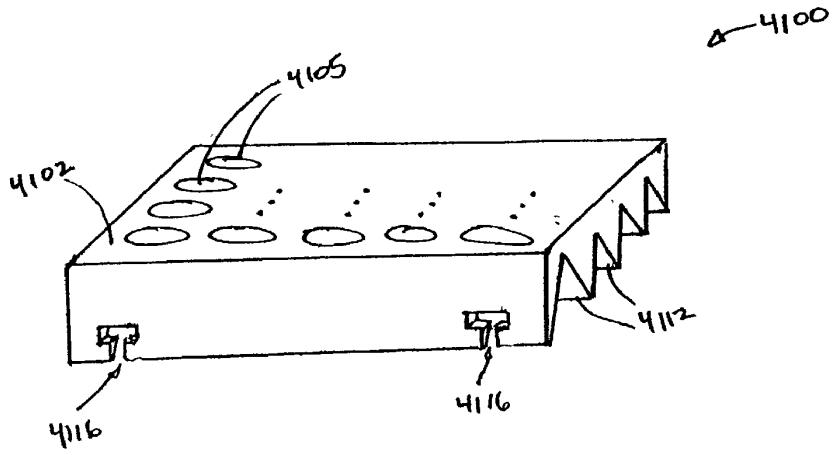

FIG. 41A

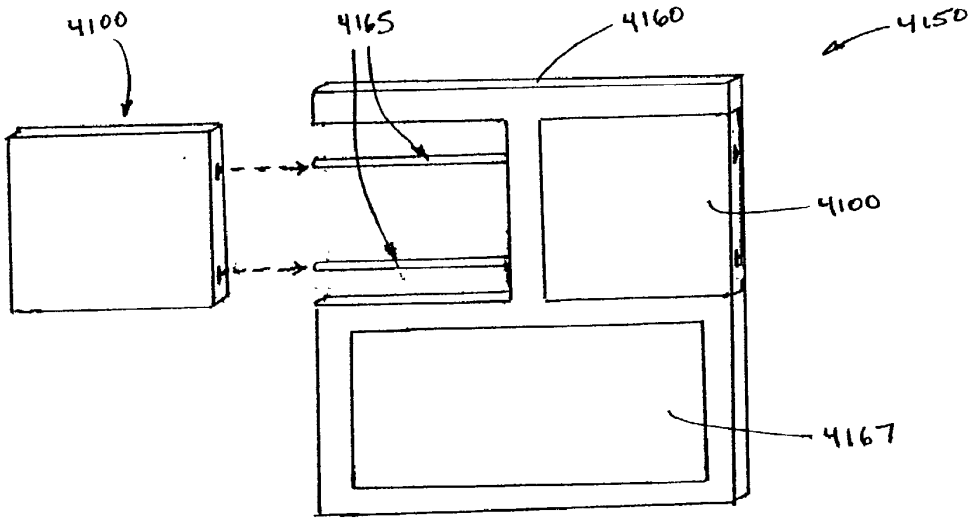

FIG. 41B

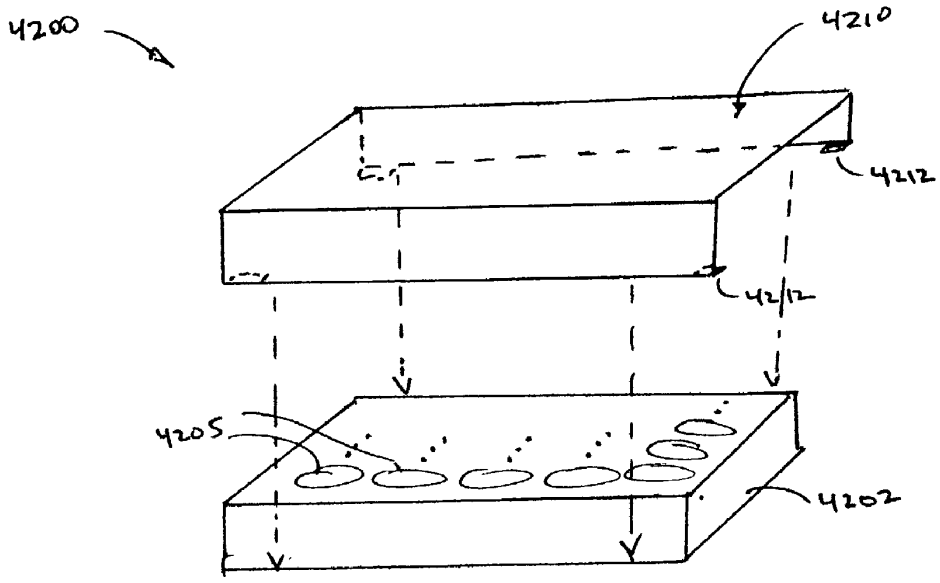

FIG. 42A

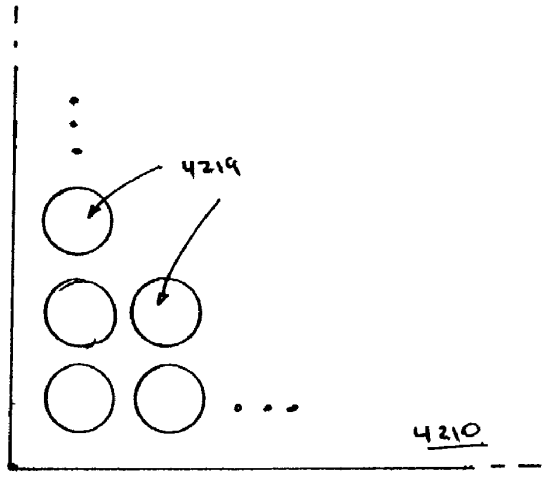

FIG. 42B

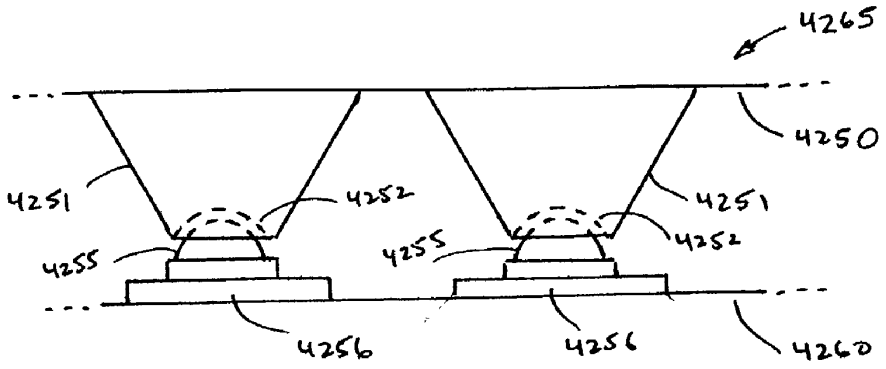

FIG. 42C

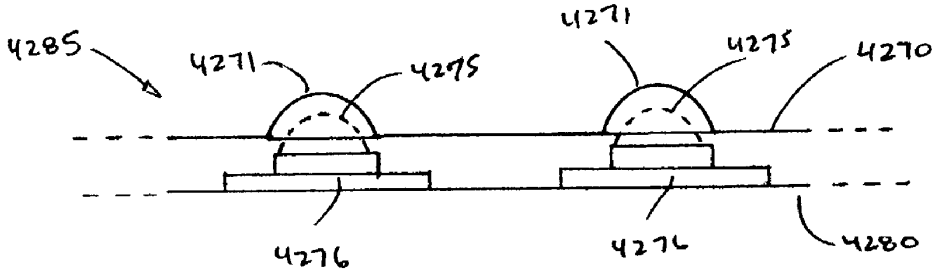

FIG. 42D

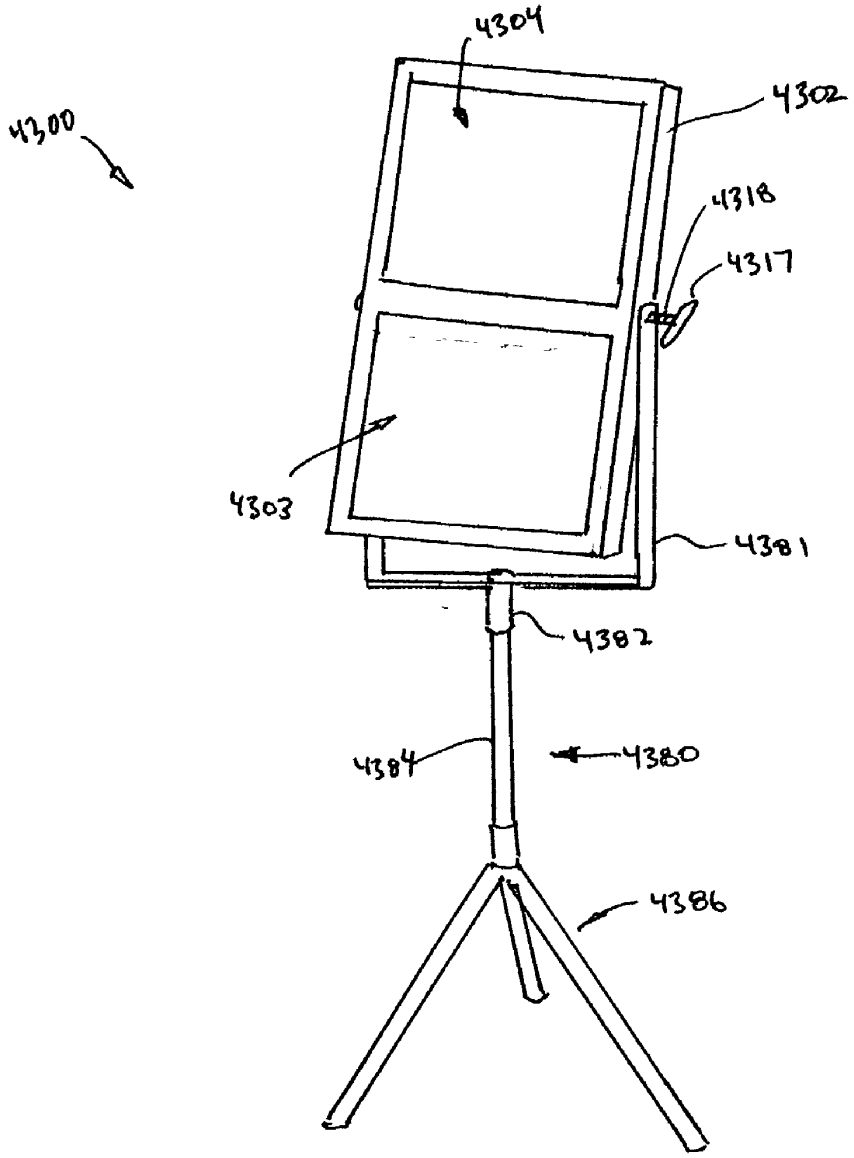

FIG. 43

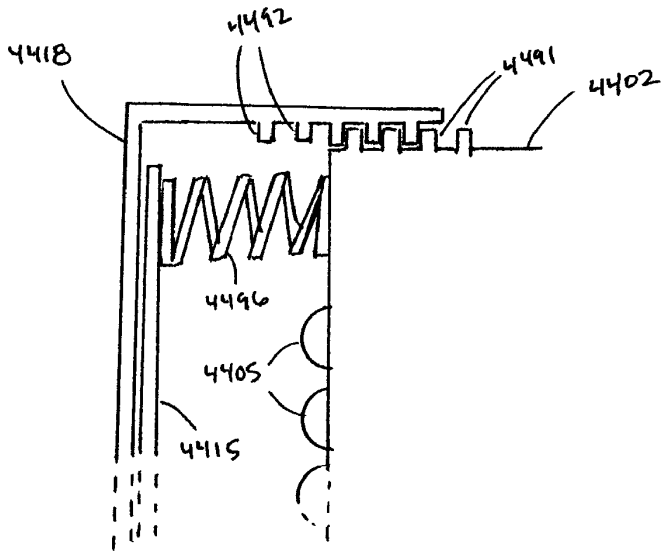

FIG. 44

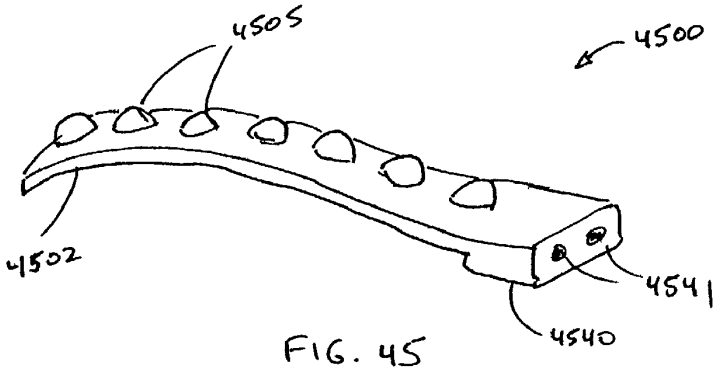

FIG. 45

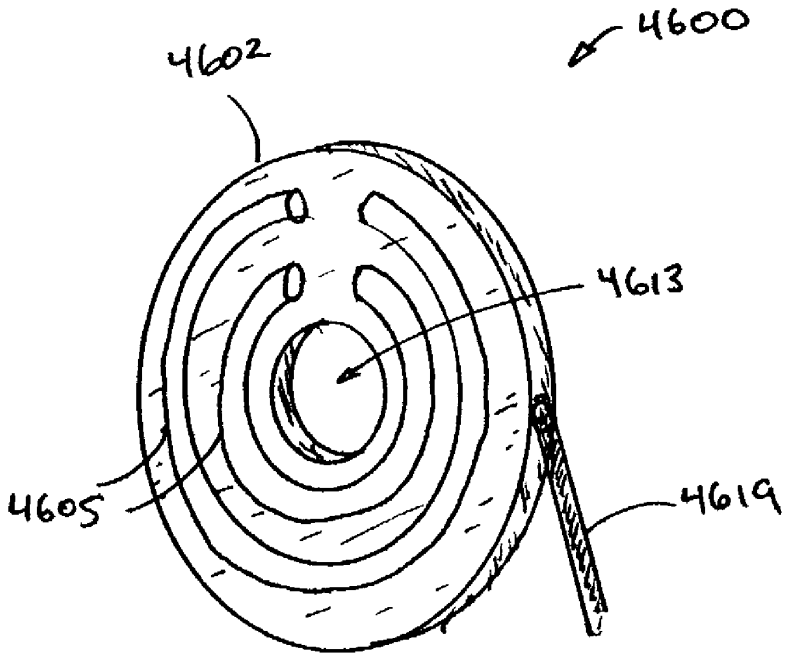

FIG. 46

WIDE AREA LIGHTING APPARATUS AND EFFECTS SYSTEM

RELATED APPLICATION INFORMATION

[0001] This application is a continuation-in-part of U.S. application Ser. No. 09/949,206 filed Sep. 7, 2001, hereby incorporated by reference as if set forth fully herein.

BACKGROUND OF THE INVENTION

[0002] 1) Field of the Invention

[0003] The field of the present invention relates to lighting apparatus and systems as may be used in film, television, photography, and other applications.

[0004] 2) Background

[0005] Lighting systems are an integral part of the film and photography industries. Proper illumination is necessary when filming movies, television shows, or commercials, when shooting video clips, or when taking still photographs, whether such activities are carried out indoors or outdoors. A desired illumination effect may also be desired for live performances on stage or in any other type of setting.

[0006] A primary purpose of a lighting system is to illuminate a subject to allow proper image capture or achieve a desired effect. Often it is desirable to obtain even lighting that minimizes shadows on or across the subject. It may be necessary or desired to obtain lighting that has a certain tone, warmth, or intensity. It may also be necessary or desired to have certain lighting effects, such as colorized lighting, strobed lighting, gradually brightening or dimming illumination, or different intensity illumination in different fields of view.

[0007] Various conventional techniques for lighting in the film and television industries, and various illustrations of lighting equipment, are described, for example, in *Lighting for Television and Film* by Gerald Millerson (3rd ed. 1991), hereby incorporated herein by reference in its entirety, including pages 96-131 and 295-349 thereof, and in Professional Lighting Handbook by Verne Carlson (2nd ed. 1991), also hereby incorporated herein by reference in its entirety, including pages 15-40 thereof.

[0008] As one example illustrating a need for an improved lighting effects system, it can be quite challenging to provide proper illumination for the lighting of faces in television and film, especially for situations where close-ups are required. Often, certain parts of the face must be seen clearly. The eyes, in particular, can provide a challenge for proper lighting. Light reflected in the eyes is known as "eye lights" or "catch lights." Without enough reflected light, the eyes may seem dull. A substantial amount of effort has been expended in constructing lighting systems that have the proper directivity, intensity, tone, and other characteristics to result in aesthetically pleasing "eye lights" while also meeting other lighting requirements, and without adversely impacting lighting of other features.

[0009] Because of the varied settings in which lighting systems are used, the conventional practice in the film, commercial, and related industries is for a lighting system, when needed, to be custom designed for each shoot. This practice allows the director or photographer to have available a lighting system that is of the necessary size, and that provides the desired intensity, warmth, tone and effects. Designing and building customized lighting systems, however, is often an expensive and time-consuming process.

[0010] The most common lighting systems in film, commercial, and photographic settings use either incandescent or fluorescent light elements. However, conventional lighting systems have drawbacks or limitations which can limit their flexibility or effectiveness. For example, incandescent lights have been employed in lighting systems in which they have been arranged in various configurations, including on ring-shaped mounting frames. However, the mounting frames used in incandescent lighting systems are often large and ponderous, making them difficult to move around and otherwise work with. A major drawback of incandescent lighting systems is the amount of heat generating by the incandescent bulbs. Because of the heat intensity, subjects cannot be approached too closely without causing discomfort to the subject and possibly affecting the subject's make-up or appearance. Also, the heat from the incandescent bulbs can heat the air in the proximity of the camera; cause a "wavering" effect to appear on the film or captured image. Incandescent lighting may cause undesired side effects when filming, particularly where the intensity level is adjusted. As the intensity level of incandescent lights change, their hue changes as well. Film is especially sensitive to these changes in hue, significantly more so than the human eye.

[0011] In addition to these problems or drawbacks, incandescent lighting systems typically draw quite a bit of power, especially for larger lighting systems which may be needed to provide significant wide area illumination. Incandescent lighting systems also generally require a wall outlet or similar standard source of alternating current (AC) power.

[0012] Fluorescent lighting systems generate much less heat than incandescent lighting systems, but nevertheless have their own drawbacks or limitations. For example, fluorescent lighting systems, like incandescent lighting systems, are often large and cumbersome. Fluorescent bulbs are generally tube-shaped, which can limit the lighting configuration or mounting options. Circular fluorescent bulbs are also commercially available, and have been used in the past for motion picture lighting.

[0013] A major drawback with fluorescent lighting systems is that the low lighting levels can be difficult or impossible to achieve due to the nature of fluorescent lights. When fluorescent lights are dimmed, they eventually begin to flicker or go out as the supplied energy reaches the excitation threshold of the gases in the fluorescent tubes. Consequently, fluorescent lights cannot be dimmed beyond a certain level, greatly limiting their flexibility. In addition, fluorescent lights suffer from the same problem as incandescent lights when their intensity level is changed; that is, they tend to change in hue as the intensity changes, and film is very sensitive to alterations in lighting hue.

[0014] Typically, incandescent or fluorescent lighting systems are designed to be placed off to the side of the camera, or above or below the camera. Because of such positioning, lighting systems may provide uneven or off-center lighting, which can be undesirable in many circumstances.

[0015] Because of their custom nature, both incandescent lighting systems and fluorescent lighting systems can be difficult to adapt to different or changing needs of a particu-

lar film project or shoot. For example, if the director or photographer decides that a different lighting configuration should be used, or wants to experiment with different types of lighting, it can be difficult, time-consuming, and inconvenient to re-work or modify the customized lighting setups to provide the desired effects. Furthermore, both incandescent lighting systems and fluorescent lighting systems are generally designed for placement off to the side of the camera, which can result in shadowing or uneven lighting.

[0016] A variety of lighting apparatus have been proposed for the purpose of inspecting objects in connection with various applications, but these lighting apparatus are generally not suitable for the movie, film or photographic industries. For example, U.S. Pat. No. 5,690,417, hereby incorporated herein by reference in its entirety, describes a surface illuminator for directing illumination on an object (i.e., a single focal point). The surface illuminator has a number of light-emitting diodes (LEDs) arranged in concentric circles on a lamp-supporting housing having a circular bore through which a microscope or other similar instrument can be positioned. The light from the LEDs is directed to a single focal point by either of two methods. According to one technique disclosed in the patent, a collimating lens is used to angle the light from each ring of LEDs towards the single focal point. According to another technique disclosed in the patent, each ring of LEDs is angled so as to direct the light from each ring on the single focal point.

[0017] Other examples of lighting apparatus used for the purpose of inspecting objects are shown in U.S. Pat. Nos. 4,893,223 and 5,038,258, both of which are hereby incorporated herein by reference in their entirety. In both of these patents, LEDs are placed on the interior of a spherical surface, so that their optical axes intersect at a desired focal point.

[0018] Lighting apparatus specially adapted for illumination of objects to be inspected are generally not suitable for the special needs of the film, commercial, or photographic industries, or with live stage performances, because the lighting needs in these fields differs substantially from what is offered by object inspection lighting apparatus. For example, movies and commercials often require illumination of a much larger area that what object inspection lighting systems typically provide, and even still photography often requires that a relatively large subject be illuminated. In contrast, narrow-focus lighting apparatuses are generally designed for an optimum working distance of only a few inches (e.g., 3 to 4 inches) with a relatively small illumination diameter.

[0019] Still other LED-based lighting apparatus have been developed for various live entertainment applications, such as theaters and clubs. These lighting apparatus typically include a variety of colorized LEDs in hues such as red, green, and blue (i.e., an "RGB" combination), and sometimes include other intermixed bright colors as well. These types of apparatus are not well suited for applications requiring more precision lighting, such as film, television, and so on. Among other things, the combination of red, green, and blue (or other) colors creates an uneven lighting effect that would generally be unsuitable for most film, television, or photographic applications. Moreover, most of these LED-based lighting apparatus suffer from a number of other drawbacks, such as requiring expensive and/or inefficient power supplies, incompatibility with traditional AC dimmers, lack of ripple protection (when connected directly to an AC power supply), and lack of thermal dissipation.

[0020] It would therefore be advantageous to provide a lighting apparatus or lighting effects system well suited for use in the film, commercial, and/or photographic industries, and/or with live stage performances, that overcomes one or more of the foregoing disadvantages, drawbacks, or limitations.

SUMMARY OF THE INVENTION

[0021] The invention is generally directed in one aspect to a novel lighting effects system and method as may be used, for example, in film and photography applications.

[0022] In one embodiment, a lighting effects system comprises an arrangement of lamp elements on a panel or frame. The lamp elements may be embodied as low power lights such as light-emitting diodes (LEDs) or light emitting electrochemical cells (LECs), for example, and may be arranged on the panel or frame in a pattern so as to provide relatively even, dispersive light. The panel or frame may be relatively lightweight, and may include one or more circuit boards for direct mounting of the lamp elements. A power supply and various control circuitry may be provided for controlling the intensities of the various lamp elements, either collectively, individually, or in designated groups, and, in some embodiments, through pre-programmed patterns.

[0023] In another embodiment, a lighting effects system comprises an arrangement of low power lights mounted on a frame having an opening through which a camera can view. The low power lights may be embodied as LEDs or LECs, for example, arranged on the frame in a pattern of concentric circles or other uniform or non-uniform pattern. The frame preferably has a circular opening through which a camera can view, and one or more mounting brackets for attaching the frame to a camera. The low power lights may be electronically controllable so as to provide differing intensity levels, either collectively, individually, or in designated groups, and, in some embodiments, may be controlled through pre-programmed patterns.

[0024] Further embodiments, variations and enhancements are also disclosed herein.

BRIEF DESCRIPTION OF THE DRAWINGS

[0025] **FIG. 1** is a diagram of an example of a lighting effects system in accordance with one embodiment as disclosed herein, illustrating placement of a camera relative to a lighting frame.

[0026] **FIG. 2** is a block diagram of a lighting effects system showing various components of a preferred system.

[0027] **FIG. 3** is an oblique view diagram illustrating an example of attachment of one type of camera mounting assembly to a particular type of lighting assembly frame.

[0028] **FIG. 4** is a front view diagram of a lighting assembly frame with small, low-power lamps to provide illumination arranged in a preferred pattern.

[0029] **FIG. 5** is a diagram illustrating aspects of the lighting effect provided by a lighting assembly such as, for example, shown in **FIG. 4**.

[0030] **FIG. 6** is a diagram illustrating various human eye features that may be of interest in providing illumination for films, commercials or photography.

[0031] **FIG. 7** is a diagram of a light segment as may be used, for example, with the lighting assembly of **FIG. 4**, along with filtering lens(es).

[0032] **FIG. 8** is a diagram illustrating the effect of a filtering lens on an individual light element.

[0033] **FIG. 9** is a graph illustrating a frequency distribution of light in accordance with one lighting effects system embodiment as disclosed herein.

[0034] **FIGS. 10A and 10B** are a block diagrams of two different types of electronic controllers as may be employed, for example, in the lighting effects system illustrated in **FIG. 2**.

[0035] **FIG. 11** is an oblique view diagram of another embodiment of a lighting assembly frame as disclosed herein.

[0036] **FIG. 12** is a diagram illustrating various options and accessories as may be used in connection with the lighting assembly frame depicted in **FIG. 11**.

[0037] **FIG. 13** is a diagram of electronic control circuitry as may be employed, for example, with the lighting effects system illustrated in **FIG. 11**.

[0038] **FIG. 14** is a graph illustrating a frequency distribution of light in accordance with another lighting effects system embodiment as disclosed herein.

[0039] **FIGS. 15A and 15B** are diagrams showing an oblique view and a top view, respectively, of a portion of a lighting assembly frame.

[0040] **FIG. 15C** is a diagram illustrating assembly of a lighting assembly frame from two halves thereof.

[0041] **FIGS. 16A and 16B** are diagrams showing an oblique view and a top view, respectively, of the backside of the lighting assembly frame portion illustrated in FIGS. **15**A and **15**B, while **FIGS. 16C, 16D** and **16**E are diagrams showing details of the lighting assembly frame portion shown in **FIGS. 16A and 16B**.

[0042] **FIG. 17** is a diagram of a cover as may be used in connection with the lighting effects system of **FIG. 2** or the frame assembly of **FIG. 4**.

[0043] **FIG. 18** is a diagram of a portion of a preferred camera mounting assembly.

[0044] **FIGS. 19A and 19B** are diagrams collectively illustrating another portion of a preferred camera mounting assembly.

[0045] **FIG. 20** is a diagram of a retention clip for a camera mounting assembly.

[0046] **FIG. 21** is a diagram of a plunger used in connection with attaching a mounting assembly to a lighting frame, in accordance with one technique as disclosed herein.

[0047] **FIG. 22** is a diagram of a mounting assembly with components from **FIGS. 18 and 19** shown assembled.

[0048] **FIG. 23** is a diagram illustrating one technique for attaching a camera mounting assembly to a lighting frame.

[0049] **FIGS. 24, 25** and **26** are diagram of components relating to another type of camera mounting assembly.

[0050] **FIG. 27** is a diagram showing components of **FIGS. 24, 25** and **26** assembled together.

[0051] **FIGS. 28 and 29** are diagrams of alternative embodiments of integral or semi-integral camera mounting assemblies.

[0052] **FIGS. 30A, 30B** and **30**C are diagrams illustrating various alternative lamp patterns.

[0053] **FIG. 31** is a diagrams of an LED suitable for surface mounting.

[0054] **FIG. 32** is a diagram of a lighting array mounted atop a circuit board.

[0055] **FIG. 33** is a diagram of one embodiment of a lighting effects system having at least two different lamp colors.

[0056] **FIG. 34** is a diagram of another embodiment of a lighting effects system having at least two different lamp colors.

[0057] **FIG. 35** is a diagram of a lighting apparatus embodied as a panel having lighting arrays mounted thereon.

[0058] **FIGS. 36A and 36B** are side-view diagrams of two different types of surface-mount LEDs, and **FIG. 36C** is an oblique image of the LED shown in **FIG. 36A**.

[0059] **FIG. 37A** is a diagram of one embodiment of a lens cap for an LED, and **FIGS. 37B and 37C** are diagrams illustrating placement of the lens cap with respect to a particular type of LED.

[0060] **FIGS. 37D and 37E** are diagrams illustrating another embodiment of a lens cap for an LED, and placement thereof with respect to a particular type of LED.

[0061] **FIG. 38A** is a front view diagram of a ring-shaped lighting frame assembly with surface-mount LEDs arranged on the lighting frame.

[0062] **FIG. 38B** is a side view diagram of one embodiment of the lighting frame assembly illustrated in **FIG. 36**A, showing backside fins for heat dissipation.

[0063] **FIGS. 39 and 40** are diagrams illustrating examples of a panel light with surface mount LEDs.

[0064] **FIG. 41A** is an oblique view diagram of a panel light illustrating backside fins and a groove for attachment to a multi-panel lighting assembly, and **FIG. 41B** is a diagram of a multi-panel lighting assembly illustrating attachment of the panel light shown in **FIG. 41A**.

[0065] **FIG. 42A** is a diagram of a detachable integrated lens sheet for a panel light, and FIGS. **42**B-**42**D are more detailed diagrams of portions of the integrated lens sheet.

[0066] **FIG. 43** is a diagram of a multi-panel lighting assembly employed on a lighting stand.

[0067] **FIG. 44** is a cross-sectional diagram illustrating an adjustable lens cover of the type shown in **FIG. 12**, and an optional mechanism for securing interiorly positioned color gel(s) and/or lens filter(s).

[0068] **FIG. 45** is a diagram of a flexible LED strip with surface mount LEDs.

[0069] **FIG. 46** is a diagram of a ring-shaped lighting frame assembly with multiple fluorescent lights.

DETAILED DESCRIPTION OF PREFERRED EMBODIMENT(S)

[0070] Before describing preferred embodiment(s) of the present invention, an explanation is provided of several terms used herein.

[0071] The term "lamp element" is intended to refer to any controllable luminescent device, whether it be a light-emitting diode ("LED"), light-emitting electrochemical cell ("LEC"), a fluorescent lamp, an incandescent lamp, or any other type of artificial light source. The term "semiconductor light element" or "semiconductor light emitter" refers to any lamp element that is manufactured in whole or part using semiconductor techniques, and is intended to encompass at least light-emitting diodes (LEDs) and light-emitting electrochemical cell (LECs).

[0072] The term "light-emitting diode" or "LED" refers to a particular class of semiconductor devices that emit visible light when electric current passes through them includes both traditional low power versions (operating in, e.g., the 20 mW range) as well as high output versions such as those operating in the range of 3 to 5 Watts, which is still substantially lower in wattage than a typical incandescent bulb, and so-called superluminescent LEDs. Many different chemistries and techniques are used in the construction of LEDs. Aluminum indium gallium phosphide and other similar materials have been used, for example, to make warm colors such as red, orange, and amber. A few other examples are: indium gallium nitride (InGaN) for blue, InGaN with a phosphor coating for white, and Indium gallium arsenide with Indium phoshide for certain infrared colors. A relatively recent LED composition uses Indium gallium nitride (InGaN) with a phosphor coating. It should be understood that the foregoing LED material compositions are mentioned not by way of limitation, but merely as examples.

[0073] The term "light-emitting electrochemical cell" or "LEC" refers to any of a class of light emitting optoelectronic devices comprising a polymer blend embeded between two electrodes, at least one of the two electrodes being transparent in nature. The polymeric blend may be made from a luminescent polymer, a sale, and an ion-conducting polymer, and various different colors are available. Further background regarding LECs may be found, for example, in the technical references D. H. Hwang et al, "New Luminescent Polymers for LEDs and LECs," Macromolecular Symposia 125, 111 (1998), M. Gritsch et al, "Investigation of Local Ions Distributions in Polymer Based Light Emitting Cells," Proc. Current Developments of Microelectronics, Bad Hofgastein (March 1999), and J. C. deMello et al, "The Electric Field Distribution in Polymer LECs," Phys. Rev. Lett. 85(2), 421 (2000), all of which are hereby incorporated by reference as if set forth fully herein.

[0074] The term "color temperature" refers to the temperature at which a blackbody would need to emit radiant energy in order to produce a color that is generated by the radiant energy of a given source, such as a lamp or other light source. A few color temperatures are of particular note because they relate to the film and photographic arts. A color temperature in the range of 3200° Kelvin (or 3200° K.) is sometimes referred to as "tungsten" or "tungsten balanced." A color temperature of "tungsten" as used herein means a color temperature suitable for use with tungsten film, and, depending upon the particulars of the light source and the film in question, may generally cover the color temperature range anywhere from about 1000° Kelvin to about 4200° Kelvin. A color temperature in the range of 5500° Kelvin (or 5500° K.) is sometimes referred to as "daylight" or "daylight balanced." Because the color of daylight changes with season, as well as changes in altitude and atmosphere, among other things, the color temperature of "daylight" is a relative description and varies depending upon the conditions. A color temperature of "daylight" as used herein means a color temperature suitable for use with daylight film, and, depending upon the particulars of the light source and the film in question, may generally cover the color temperature range anywhere from about 4200° Kelvin to about 9500° Kelvin.

[0075] **FIG. 1** is a diagram of an example of a preferred lighting effects system **100** in accordance with one embodiment as disclosed herein, illustrating placement of a camera **140** relative to a lighting frame **102**. The lighting frame **102** shown in **FIG. 1** may be generally ring-shaped (as shown in, for example, **FIGS. 3 and 4**, and later described herein), and may define a central hole **103** through which the camera **140** can view. The camera **140** itself, while illustrated in **FIG. 1** as a motion picture type camera, may be embodied as any type of image capture or optical viewing device, whether analog or digital in nature. For example, the camera **140** may use film or solid state image capture circuitry (e.g., CCDs), and may be a still photography camera or a motion picture camera. In a preferred embodiment, the lighting frame **102** is physically attached to the camera **140** using a camera mounting, as further described herein.

[0076] **FIG. 2** is a block diagram of a lighting effects system **200** that may, if desired, be constructed in accordance with various principles illustrated in or described with respect to **FIG. 1**. As illustrated in **FIG. 2**, the lighting effects system **200** comprises a lighting frame **202** upon which are mounted or otherwise affixed a plurality of lamps **205**. Preferred arrangements of the lamps **205** are described further herein. The lighting frame **202** may include a mounting assembly receptor **220** for receiving a mounting assembly **230** (preferably removable in nature), and an electrical socket **215** for receiving a cable **213** providing electrical power to the lamps **205** from a power source **210**, although in alternative embodiments battery power may be used. A power controller **212** is preferably interposed between the power source **210** and the electrical socket **215**, for providing various lighting effect functions described in more detail hereinafter, such as, for example, dimming, strobing, selective activation, pulsation, and so on, or combinations thereof.

[0077] In a preferred embodiment, the lighting frame **202** is ring-shaped, and the lamps **205** are arranged in a pattern around the center hole of the lighting frame **202** so as to provide the desired lighting condition—typically, the lamps **205** will be arranged in a symmetrical, regular pattern so as to provide relatively even lighting over the area of interest. The lighting frame **202** is preferably comprised of a lightweight, durable material, such as thermoplastic and/or alu-

minum, with a flat black finish (either paint, coating or material) so as to eliminate any reflections from the front of the lighting frame **202** that might cause ghosts to the final image.

[**0078**] An example of a preferred lighting frame **302** is depicted from various angles in **FIGS. 3 and 4**. **FIG. 4** shows a front view of a lighting frame **302**, illustrating the preferred ring-shaped nature thereof. In the embodiment shown in **FIG. 4, a** number of lamp segments **306** are arranged in a radial or arrayed pattern around the center hole **303** of the lighting frame **302**. The lamp segments **306** are positioned along rays **308** emanating from a center point **307** of the lighting frame **302**, and are preferably equidistant from one another (i.e., the rays **308** are preferably defined such that all of the angles between neighboring rays **308** are equal). The equidistant placement of the lamp segments **306** results in a symmetrical, even pattern that advantageously provides even lighting over an area of interest.

[**0079**] The density of the lamp pattern may vary, and is dictated in part by the particular lighting needs. Examples of alternative lamp arrangement patterns are shown in FIGS. **30**A-**30**C. **FIGS. 30A and 30B** show the lighting frame **302** with different pattern densities of lamp segments **306**. **FIG. 30C** illustrates a lamp pattern in which pairs **309** of lamp segments **306** are arranged near adjacent to one another, while each pair **309** of lamp segments **306** is positioned further away from its neighboring pair **309** than from the other lamp segment **306** that is part of the lamp segment pair **309**. The lamp patterns shown in **FIGS. 30A, 30B** and **30**C are meant to be merely illustrative and not exhaustive. Other lamp patterns might involve, for example, triplets of lamp segments (rather than pairs or singles), or alternating single lamps with pairs and/or triplets, or lamp segments which have gradually increasing or decreasing spacing between them, or lamp segment clusters having the same or different numbers of lamp segments in each cluster, to name a few. The lamp pattern can thus be varied to suit the particular lighting needs, but is preferably symmetric at least in those situations calling for even lighting over the area of interest.

[**0080**] Each of the lamp segments **306** preferably comprises a plurality of low power lamps **305**, such as illustrated, for example, in **FIG. 4**. The low power lamps are preferably solid state in nature and may comprise, for example, light-emitting diodes (LEDs), light-emitting crystals (LECs), or other low power, versatile light sources. Alternatively, fluorescent lamps may be used instead of lamp segments, as described later herein, for example, with respect to, e.g., **FIG. 13**. Fluorescent lights are power efficient and tend to have high concentrations or spikes of blue, green, and ultraviolet wavelength light. Most white LEDs have color spikes as well. These spikes of color combined with improper proportions of other wavelengths can render the colors of objects seen or photographed as incorrect or odd in hue. Slight color variations may be added relatively easily to the lenses of LEDs to compensate for these deficiencies without significantly impacting the overall light output. Colored LED lenses may also be used to generate a desired color (such as red, green, etc.), but, since colored lenses are subtractive in nature, the stronger the color, generally the more the output of the LED will be dimmed. White LEDs typically utilize clear or nearly clear lenses; however, in any of the embodiments described herein, a clear LED lens may be manufactured with slight subtractive characteristics in order to minimize any color spikes and/or non-linearities in the output of an LED.

[**0081**] The number of low power lamps **305** in each lamp segment **306** may be the same or may vary among lamp segments **306**. If the number of low power lamps **305** is the same in each lamp segment **306** and are spaced the same (for example, equidistant from one another) within each lamp segment **306**, then the resulting pattern will be a plurality of concentric circles of low power lamps **305** radiating outward from the inner circular portion to the outer circular portion of the lighting frame **302**. It will be appreciated, however, that the low power lamps **305** need not be arranged in segments **306** as illustrated in **FIG. 4**, but may be arranged in clusters or other patterns, whether uniform or non-uniform, over the lighting frame **302**. However, a symmetrical, regular pattern of low power lamps **305** is preferred, at least where uniform lighting is desired over an area of interest.

[**0082**] **FIG. 5** illustrates the effect of a lighting frame assembly such as light frame **302** with low power lamps **305** arranged as shown in **FIG. 4**, in illuminating a subject **646**. As shown in **FIG. 5**, radiating light regions **620**, **621** from lamps arranged on the front surface of the lighting frame **302** (as illustrated in **FIG. 4**, for example) overlap one another in a manner so as to provide lighting from multiple angles. With a radial or arrayed pattern of lamp segments **306** as shown in **FIG. 4, a** subject **646** may be relatively evenly illuminated from every angle. **FIG. 1** illustrates a preferred placement of a camera **140** (including any type of image capture device, whether film based, solid state/CCD, or otherwise) with respect to a lighting frame **102** (which may be embodied, for example, as lighting frame **302**). As illustrated in **FIG. 1**, the camera **140** may be positioned so that its lens or optical front-end peers through the central hole **103** of the lighting frame **102**, thus allowing the lighting to be presented from the same angle and direction as the camera viewpoint.

[**0083**] **FIG. 6** illustrates how the lighting frame assembly with the pattern of lamp segments **306** as shown in **FIG. 4** may advantageously illuminate a human subject's eyes. In **FIG. 6**, the iris **650** of the subject's eye **654** is illustrated showing a circular pattern of reflected light segments **652** around the iris **650**. A lighting pattern of a lighting system such as illustrated in **FIG. 4** can illuminate the iris **650** of the subject's eye **654** from multiple angles, thus helping provide desirable "eye lights" or "catch lights" with respect to a human subject **546**, as well as providing uniform, even lighting over the area of interest.

[**0084**] Turning once again to **FIG. 3**, an oblique view of the lighting frame **302** is shown illustrating an example of attachment of one type of camera mounting assembly **330** to the lighting frame **302**. In the particular embodiment illustrated in **FIG. 3, a** mounting assembly receptor **320** is affixed to, molded as part of, or otherwise attached to the lighting frame **302**. The camera mounting assembly **330** is preferably configured so as to attach securely to the mounting assembly receptor **320**. The mounting assembly receptor **320** may, for example, include a socket **323** or similar indentation adapted to receive a corresponding member **335** on the camera mounting assembly **330**. The member **335** may be attached to an elongated rod or arm **332**, along which a camera clamp **334** may be slidably engaged. The camera

clamp **334** preferably includes a generally U-shaped clamping portion **336** which may be securely attached along the housing of a camera, and may advantageously be moved along the elongated rod or arm **332** and clamped into a suitable position using a clamping screw or other fastening mechanism.

[**0085**] **FIGS. 15A and 15B** are diagrams showing an oblique view and a frontal view, respectively, of one portion of a lighting assembly frame **1502** in accordance with one or more of the concepts or principles explained with respect to the embodiment shown in **FIG. 3**. As illustrated in **FIGS. 15A and 15B**, the lighting assembly frame portion **1502** is generally ring-shaped in nature, having a central hole **1503** for allowing a camera or other image capture device to view through the lighting assembly frame. The lighting assembly frame portion **1502** may be reinforced, if desired, with ribs **1560**, and may include, as noted with respect to **FIG. 3, a** mounting assembly receptor **1520** for receiving a camera mounting assembly (not shown in **FIG. 15A**), and an electrical socket **1515** for receiving a cable or wires for providing power to the lamps of the lighting assembly.

[**0086**] The lighting frame portion **1502** illustrated in **FIG. 15A** comprises one half (specifically, the backside half) of a complete lighting frame assembly. A corresponding lighting frame portion **1592** (e.g., printed circuit board), as shown in **FIG. 15**C, may be adapted to fit securely to the lighting frame portion **1502** (e.g., injected molded polycarbonate), and may attach thereto by, for example, exterior locking tabs **1564** and/or interior locking tabs **1567**, which are shown in **FIGS. 15A and 15B**. Alternatively, other means for fastening together the lighting frame assembly **1501** may be used, such as screws, glue, etc.

[**0087**] Likewise, the mounting assembly receptor **1520** may comprise any suitable mechanism for securing a camera mounting assembly to the lighting frame portion **1502** of the lighting frame assembly **1501**. In the example illustrated in **FIGS. 15A and 15B**, the mounting assembly receptor **1520** may comprise a raised, slightly tapered cylindrical housing, defining a hollow cylindrical chamber in which the camera mounting assembly may be fitted. If the lighting frame portion **1502** is formed of plastic, for example, then the mounting assembly receptor **1520** may be formed through an injection molding process. **FIG. 18** depicts an example of a portion of a camera mounting assembly **1801** as may be affixed to the lighting frame portion **1502** using the mounting assembly receptor **1520**. The camera mounting assembly **1801** in **FIG. 18** comprises an elongated rod or arm **1832**, at the end of which is affixed an attachment member **1835** having a generally circular body portion with two wing-like protruding tabs **1838**. The tabs **1838** may be fitted into two corresponding indentations **1524** in the ring-shaped top surface of the cylindrical housing of the mounting assembly receptor **1520**. The camera mounting assembly **1801** may then be twisted in a clockwise direction to cause the tabs **1838** to slide through the slits adjacent to the indentations **1524** in the mounting assembly receptor **1520**, allowing the camera mounting assembly **1801** to be slid downward, then twisted in a counter-clockwise direction and locked into place in the mounting assembly receptor **1520**. The camera mounting assembly **1801** may be disengaged from the lighting frame portion **1501** by manually applying pressure to release the locking tabs and twisting the camera mounting assembly **1801** in the opposite (i.e., clockwise in this example) direction from that originally used to bring it into a locking position. The camera mounting assembly **1801** may then be raised upwards and twisted in a counter-clockwise direction to cause the tabs **1838** to slide back through the slits adjacent to the indentations **1524** in the mounting assembly receptor **1520**, thereby completely releasing the camera mounting assembly **1801**.

[**0088**] A variety of other means may alternatively be used to affix a camera mounting assembly to the lighting frame portion **1502**, but the mechanism used in the embodiment depicted in **FIGS. 15A and 15B** has the advantage of not requiring additional pieces (such as screws), and being relatively simple and quick to use.

[**0089**] A main purpose of the camera mounting assembly **1801** is to allow the lighting frame assembly to be secured to a camera or other image capture device, thus providing even lighting from all directions surrounding the camera or other image capture device, and allowing, for example, the lighting frame assembly to follow the motion of the camera or other image capture device as it is moved. An example of additional components allowing the camera mounting assembly **1801** to be secured to a camera are shown in **FIGS. 19A and 19B**. In particular, **FIGS. 19A and 19B** depict two halves **1902**, **1912** of a camera clamp which may be joined together and attached to the elongated rod or arm **1832** of the camera mounting assembly **1801**, arriving at a complete camera mounting assembly such as illustrated in **FIG. 3** (i.e., camera mounting assembly **330**) or, in more detail, in **FIG. 22**. The rectangular openings **1903**, **1913** in the two halves **1902** and **1912**, respectively, of the camera clamp allow it to be slid onto the elongated rod or arm **1832**. A spring-loaded retention clip, as shown in **FIG. 20**, may be used to help secure the camera clamp to the elongated rod or arm **1832**. In alternative embodiments, the camera clamp (comprising the combination of two halves **1902**, **1912**) may be permanently affixed and/or integrally formed with the elongated rod or arm **1832**.

[**0090**] An attachment member, such as pre-molded clamping member **1916** shown in **FIG. 19**B, may be used to slide onto an appropriate feature of the camera (such as a Panavision® type motion picture camera), e.g., a rod or other feature of the camera. Other types of attachment members may be used, depending upon the particular nature of the camera or other image capture device. The camera mounting assembly **1801**, in conjunction with the preferred camera clamp illustrated in **FIGS. 19A and 19B**, thereby allow a lighting frame assembly to be secured to a camera or other image capture device.

[**0091**] **FIG. 23** is a diagram illustrating one technique for attaching a camera mounting assembly to a lighting frame. As shown in **FIG. 23, a** lighting frame **1302** may comprise a mounting assembly receptor **1320**, similar to as described with respect to **FIG. 3** and FIGS. **15A-15B**, for example. In connection with attaching a camera mounting assembly **2328**, a spring **2305** is first positioned in the mounting assembly receptor **2320**, atop of which is then placed a plunger **2308** (such as illustrated in **FIG. 21**). Then, the camera mounting assembly **2328** is attached, by, e.g., inserting the attachment member into the mounting assembly receptor **2320**. In essence, the application of the attachment member to the mounting assembly receptor **2320** may be viewed analogously to inserting and twisting a "key" in a

keyhole. The spring **2305** effectively locks the camera mounting assembly **2328** in place against the back "key-plate" surrounding the keyhole, thus allowing the camera mounting assembly **2328** to be "twist-locked" into place. The assembly structure shown in **FIG. 23** allows relatively easy attachment and detachment of the camera mounting assembly **2328**. Other attachment techniques may also be used.

[**0092**] Another embodiment of a camera mounting assembly, as may be used to attach a lighting frame to a camera or other image capture device, is illustrated in **FIG. 27**, and various components thereof are illustrated individually in **FIGS. 24, 25** and **26**. With reference first to **FIG. 24**, two halves **2415, 2418** of a camera clamp may be joined together to form a main camera clamp body. the two halves **2415, 2418** may be secured together by screws or any other suitable fastening means. A slot in the camera clamp body may be provided to allow placement of a thumbwheel **2604** (illustrated in **FIG. 26**) which allows tightening of a clamping member **2437**. Several holes **2430** are provided in camera clamp portion **2415**, which receive corresponding protrusions **2511** from an attachment member **2501**, illustrated in **FIG. 25**, which has a generally circular body portion **2519** with two wing-like protruding tabs **2586**. The completed camera mounting assembly **2701** appears as in **FIG. 27**.

[**0093**] The tabs **2586** of the camera mounting assembly **2701** shown in **FIG. 27** may be fitted into the two corresponding indentations **1524** in the ring-shaped top surface of the cylindrical housing of the mounting assembly receptor **1520** shown in **FIG. 15**, as described previously with respect to the **FIG. 22** camera mounting assembly. As before, the camera mounting assembly may be twisted in a clockwise direction to cause the tabs **2586** to slide through the slits adjacent to the indentations **1524** in the mounting assembly receptor **1520**, allowing the camera mounting assembly **2701** to be slid downward, then twisted in a counter-clockwise direction and locked into place in the mounting assembly receptor **1520**. The camera mounting assembly **2701** may be disengaged from the lighting frame portion **1501** by manually applying pressure to release the locking tabs and twisting the camera mounting assembly **2701** in the opposite (i.e., clockwise in this example) direction from that originally used to bring it into a locking position. The camera mounting assembly **2701** may then be raised upwards and twisted in a counter-clockwise direction to cause the tabs **2586** to slide back through the slits adjacent to the indentations **1524** in the mounting assembly receptor **1520**, thereby completely releasing the camera mounting assembly **2701**.

[**0094**] As noted previously, a variety of other means may alternatively be used to affix a camera mounting assembly **2701** of **FIG. 27** to the lighting frame portion **1502**.

[**0095**] As with the camera mounting assembly **1801** shown in **FIG. 18**, the camera mounting assembly of **FIG. 27** functions to allow a lighting frame assembly to be secured to a camera or other image capture device, thus allowing, for example, the lighting frame assembly to follow the motion of the camera or other image capture device as it is moved. An attachment member, such as pre-molded clamping member **2437** shown in **FIG. 24**, may be used to slide onto an appropriate feature, such as a rod or other feature, of the camera (for example, an Arri® type motion picture camera).

[**0096**] **FIGS. 28 and 29** are diagrams of alternative embodiments of camera mounting assemblies having certain integral components. **FIG. 28** illustrates a camera mounting assembly **2801** as may be used, for example, to secure a lighting frame to a Panavision® type camera. As shown in **FIG. 28**, an attachment member **2838** (or "key") connects with, and integrally attaches to, a camera clamp plate **2802**, in a manner similar to that shown in **FIG. 18**, but eliminating the elongated rod or arm shown therein. A pair of cylindrically-shaped lock lever "screws"**2851, 2852** enable the camera mounting assembly **2801** to attach to an appropriate feature of the camera. Lock levers **2855, 2856** connected to each of the lock lever screws **2851, 2852** can be flipped (e.g., a quarter turn) in order to lock the screws **2851, 2852** into place, thus securing the camera mounting assembly **2801** to the camera. The lock lever screws **2851, 2852** can be flipped the opposite direction to unlock the screws **2851, 2852** and thereby release the camera mounting assembly **2801** from the camera.

[**0097**] **FIG. 29** illustrates a camera mounting assembly **2901** as may be used, for example, to secure a lighting frame to an Arri® type camera. As shown in **FIG. 29**, an attachment member **2938** (or "key") connects with, and attaches to, a camera clamp plate **2902**, by way of, e.g., screws **2940**. A cylindrically-shaped lock lever screw **2951** enables the camera mounting assembly **2901** to attach to an appropriate feature of the camera. A lock lever **2855** connected to the lock lever screw **2851** can be flipped (e.g., a quarter turn) in order to lock the screw **2851** into place, thus securing the camera mounting assembly **2901** to the camera. The lock lever screw **2851** can be flipped the opposite direction to unlock the screw **2851** and thereby release the camera mounting assembly **2901** from the camera.

[**0098**] Additional details of the particular lighting frame portion **1501** of **FIGS. 15A and 15B** are illustrated in **FIGS. 16A through 16E**. **FIGS. 16A and 16B**, for example, are diagrams showing an oblique view and a top view, respectively, of the backside of the lighting frame portion **1501** illustrated in **FIGS. 15A and 15B**. In **FIGS. 16A and 16B** can more clearly be seen, for example, the interior locking tabs **1567** and exterior locking tabs **1564** that can be used to secure the lighting frame portion **1501** to its corresponding half, as previously described with respect to **FIG. 15C**. In **FIG. 16C** is depicted a close-up illustration of the backside of the mounting assembly receptor **1520** and electrical socket **1515** illustrated from the opposite side in **FIGS. 15A and 15B**. In **FIGS. 16D and 16E** can be seen additional details of both the mounting assembly receptor **1520 (FIG. 16D)** and the interior locking tabs **1567** and exterior locking tabs **1564**. As shown in **FIGS. 16D and 16E**, the interior locking tabs **1567** may include a protruding locking member **1570** for securing the lighting frame portion **1501** to its counterpart by, e.g., snapping it into place, and the exterior locking tabs **1564** may likewise include protruding locking members **1568** having a similar function. The frame wall **1562** between the two nearby exterior locking tabs **1564** may be reinforced with a supporting rib **1569**, to provide added counter-force when the lighting frame assembly is put together.

[0099] The camera mounting assemblies shown in **FIGS. 18, 23, 27, 28** and **29** are merely examples of camera mounting assemblies that may be utilized in various embodiments described herein. Other camera mounting assemblies may be specifically adapted to the particular camera of interest. The mounting assembly receptor **320** (or **1520**) may in one aspect be viewed as a universal receptor, allowing different camera mounting assemblies to be connected to the lighting frame, provided that they are compatible with the mounting assembly receptor (such as the example shown in FIGS. **15A-15**BB and elsewhere). A single lighting frame may thus be used with any of a variety of different cameras or other image capture devices. Although examples have been explained with respect to certain camera types (that is, a Panavision® camera or an Arri® camera), the camera may be of any type, whether for film or still photograph, and may be based upon either analog or digital imaging techniques. Moreover, while preferred dimensions are illustrated in some of the figures, the mounting assemblies and components thereof may be of any appropriate size and shape.

[0100] Further description will now be provided concerning various preferred light elements as may be used in connection with one or more embodiments as disclosed herein. While generally discussed with reference to **FIG. 3**, the various light elements described below may be used in other embodiments as well. When embodied as LEDs, the low power lamps **305** typically will emit light at approximately 7400-7500K degrees when at full intensity, which is white light approximating daylight conditions. However, LEDs of a different color, or one or more different colors in combination, may also be used. **FIG. 9** is an energy spectrum graph showing a typical frequency distribution (in terms of light wavelength) of light output from white-light, low voltage LEDs, and illustrating a main peak at about 600 nanometers. A color correction mechanism, such as a color correction gel or lens filter, may be used to alter the color of the LED light. For example, the LED light could be converted to "tungsten daylight" (similar in hue to an incandescent bulb) by use of a color gel or colored lens. A diffusion lens or filter may also be used, by itself or in conjunction with a color gel or colored lens, to diffuse or soften the outgoing light. A diffusion lens or filter may be formed of, e.g., clear or white opaque plastic, and may be configured in a ring-shaped pattern of similar dimension to the light frame **302** to facilitate mounting thereon. **FIG. 17**, for example, shows a diagram of an opaque, ring-shaped cover **1701** as may be used in connection with the lighting frame assembly depicted in **FIG. 3** or **FIG. 4**.

[0101] **FIG. 7** is a more detailed diagram of a light segment **792** (e.g., an array) as may be used, for example, in connection with the lighting frame **302** shown in **FIG. 4**. The light segment **792** may correspond to each of the individual light segments **306** shown in **FIG. 4**, and the various light elements (i.e., LEDs) **790** in **FIG. 7** may correspond to the individual low power lamps **305** shown in **FIG. 3**. **FIG. 7** illustrates a straight row of LEDs **790** as may comprise the lighting segment **790**. Although fifteen LEDs **790** are illustrated in the example shown in **FIG. 7**, any number of LEDs **790** may be used, subject to physical space limitations and lighting intensity requirements. In addition, a set of filtering lenses **794** (which are preferably formed as a single, collective lens comprised of individual lens elements **795** connected together) may be placed over the light segment **792** as shown, such that each lens element **795** is positioned in the light path of one of the LEDs **790**. The overall effect can be, for example, to focus or spread the light according to a specifically desired pattern, such as the exemplary light pattern **796** shown in **FIG. 7**. A variety of other light filtering techniques may also be used.

[0102] **FIG. 8** is a diagram illustrating the effect of a filtering lens element (e.g., wave guide) **876** on an individual light element (e.g., LED) **872**. As shown in **FIG. 8**, light **874** emanates from the LED **872** in a generally even pattern, but can be focused or otherwise filtered by the filtering lens element **876**. **FIG. 7** illustrates an example of collectively filtering all of the LEDs **790** of the light segment **792**.

[0103] Various embodiments of lighting apparatus as described herein utilize different color lamp elements in order to achieve, for example, increased versatility or other benefits in a single lighting mechanism. Among the various embodiments described herein are lamp apparatuses utilizing both daylight and tungsten lamp elements for providing illumination in a controllable ratio. Such apparatuses may find particular advantage in film-related applications where it can be important to match the color of lighting with a selected film type, such as daylight or tungsten.

[0104] Alternatively, or in addition, lamp elements of other colorations may be utilized. It is known, for example, to use colored lamp elements such as red, green, and blue LEDs on a single lighting fixture. Selective combinations of red, green, and blue ("RGB") lamp elements can generally be used to generate virtually any desired color, at least in theory. Lighting systems that rely upon RGB lamp elements can potentially used as primary illumination devices for an image capture system, but suffer from drawbacks. One such problem is that the red, green, and blue colors generated by the light elements do not necessary mix completely. The discrete RGB lamp elements (e.g., LEDs) each project a localized "pool" of its individual primary color. This manifests as spots of color, or bands of individual or partially mixed colors. One of the only presently available solutions to correct for this problem is mixing the colors using a diffusion technique. Diffusion mixing can be accomplished by adding defractors, gratings, or white opal-appearing filters, for example. Unfortunately, these techniques end up reducing the overall output of the lighting apparatus and, more importantly, severely reduce the ability of the LEDs to "project" light in a direct fashion. Another problem for illumination systems which rely upon RGB color mixing is that not all of the LEDs are generally used at full power for most lighting situations. One or two of the LED color groups typically have to be dimmed in order for the desired color to be generated, which can further reduce the overall light output. When these factors are considered in combination, RGB based lighting apparatus may not be well suited for providing primary illumination for image capture applications (such as film).

[0105] While the foregoing discussion has principally focused on RGB based lighting apparatus, similar problems and drawbacks may be experienced when employing lamp elements in other color combinations as well.

[0106] In various embodiments as disclosed herein, a lighting apparatus is provided which utilizes two or more complementary colored lamp elements in order to achieve a variety of lighting combinations which, for example, may be particularly useful for providing illumination for film or

other image capture applications. A particular example will be described with respect to a lighting apparatus using lamp elements of two different colors, herein referred to as a "bi-color" lighting apparatus. In a preferred embodiment, the bi-color lighting apparatus utilizes light elements of two different colors which (unlike red, green, and blue) are separated by a relatively small difference in their shift or color balance. When reference is made herein to light elements of two different colors, the light elements may, for example, include a first group which provide light output at a first color and a second group which provide light output at a second color, or else the light elements may all output light of a single color but selected ones of the light elements may be provided with colored LED lenses or filtering to generate the second color. In a preferred embodiment, as will be described, the bi-color lighting apparatus uses lamp elements having daylight and tungsten hues (for example, 5200° K and 3200° K color temperatures, respectively). Other bi-color combinations may also be used and, preferably, other combinations of colors which are closely in hue or otherwise complementary in nature.

[**0107**] One possible advantage of a bi-color lighting system as will be described in certain embodiments below is the ability to more easily blend two similar colors (e.g., 5500 K and 3200 K color temperature hues), particularly when compared to a tri-color (e.g., RGB) lighting system that relies upon opposing or widely disparate colors. The blending process of two similar colors is not nearly as apparent to the eye, and more importantly in certain applications, is a more suitable lighting process for film or video image capture devices. In contrast, attempting to blend 3 primary or highly saturated (and nearly opposite colors) is much more apparent to the eye. In nature one may visually perceive the blending of bi-colors, for example, from an open sky blue in the shade, to the warmth of the direct light at sunset. Such colors are generally similar, yet not the same. Their proportion in relation to each other is a naturally occurring gradient in most every naturally lit situation. This difference is the basis of most photographic and motion picture lighting hues. These hues give viewers clues as to time of day, location and season. Allowing separate control of the two different color lamp elements (such as LEDs), through two separate circuit/dimmer controls or otherwise, provides the ability to easily adjust (e.g., cross-fade, cross-dim, etc.) between the two colors because they do not have significant color shifts when dimmed and blend in a visually pleasing manner, allowing the type of color gradients that occur in nature. In addition, virtually all still and motion picture film presently used in the industry is either tungsten or daylight balanced, such that various combinations of daylight and tungsten (including all one color) are well matched directly to the most commonly used film stocks. These features make various of the lighting apparatus described herein particularly well suited for wide area still, video, and motion picture usage, especially as compared to RGB-based or other similar lighting apparatus. The above principles may also be extended to lighting systems using three or more lamp element colors.

[**0108**] **FIG. 33** is a diagram of one embodiment of a lighting effects system **3300** having at least two different lamp element colors. As illustrated in **FIG. 33**, the lighting effects system **3300** comprises a lighting frame mounting surface **3302** having a plurality of lamp elements **3305** which, in this example, include daylight LEDs **3304** and tungsten LEDs **3303**, although different lamp elements and/or different colors could be chosen. The lighting effects system **3300** further comprises various control electronics for controlling the illumination provided by the lamp elements **3305**. In particular, the lighting effects system **3300** comprises an intensity control adjustment **3342**, an intensity control circuit **3345**, a ratio control adjustment **3341**, and a ratio control circuit **3346**. The intensity control adjustment **3342** and ratio control adjustment **3341** may each be embodied as, e.g., manual control knobs, dials, switches, or other such means, or alternatively may be embodied as a digital keypad, a set of digital buttons, or the like. A visual display (not shown) such as an LCD display may be provided to allow the operator to view the settings of the intensity control adjustment **3342** and ratio control adjustment **3341**. Alternatively, the ratio control adjustment **3341** and/or intensity control adjustment **3342** may comprise digital commands or values received from a computer or similar device.

[**0109**] In operation, setting the intensity control adjustment **3342** selects the illumination level for the lamp elements **3305**, while setting the ratio control adjustment **3341** selects the relative intensities between, in this example, the daylight LEDs **3304** and the tungsten LEDs **3303**. The intensity control circuit **3352** and ratio control circuit **3346** may comprise analog and/or digital circuitry, and the output of the ratio control circuit **3346** modifies the incoming power supply separately for the daylight LEDs **3304** and the tungsten LEDs **3303** in a manner dictated by the setting of the ratio control adjustment **3341**. Accordingly, by use of the ratio control adjustment **3341**, the operator may select more daylight illumination by increasing the relative intensity of the daylight LEDs **3304** or may select more tungsten illumination by increasing the relative intensity of the tungsten LEDs **3303**. To increase or decrease the overall light output intensity, the operator may adjust the intensity control adjustment **3342**. The lighting effects system **3300** thereby may provide different combinations of daylight/tungsten coloration to match a wide variety of settings and circumstances, with the two colors being generally complementary in nature and thus providing a balanced, well blended illumination effect.

[**0110**] **FIG. 34** is a diagram of another embodiment of a lighting effects system having at least two different lamp colors. As illustrated in **FIG. 34**, and similar to **FIG. 33**, the lighting effects system **3400** comprises a lighting frame mounting surface **3402** having a plurality of lamp elements **3405** which, in this example, include daylight LEDs **3404** and tungsten LEDs **3403**, although different lamp elements and/or different colors could be chosen. The lighting effects system **3400**, as with that of **FIG. 33**, further comprises various control electronics for controlling the illumination provided by the lamp elements **3405**. In particular, the lighting effects system **3400** comprises individual intensity control adjustments **3451**, **3452** for daylight and tungsten lamp elements (e.g., (LEDs) **3403**, **3404**, and individual intensity control circuits **3456**, **3457** also for the daylight and tungsten LEDs **3403**, **3404**. The tungsten intensity control adjustment **3451** and daylight intensity control adjustment **3452** may, similar to **FIG. 33**, each be embodied as, e.g., manual control knobs, dials, switches, or other such means, or alternatively may be embodied as a digital keypad, a set of digital buttons, or the like. A visual display (not shown) such as an LCD display may be provided to allow the

operator to view the settings of the two intensity control adjustments **3451**, **3452**. Alternatively, the intensity control adjustments **3451**, **3452** may comprise digital commands or values received from a computer or similar device.

[**0111**] In operation, setting the tungsten intensity control adjustment **3451** selects the illumination level for the tungsten LEDs **3403** via the tungsten intensity control circuit **3456**, and setting the daylight intensity control adjustment **3452** selects the illumination level for the daylight LEDs **3404** via the daylight intensity control circuit **3457**. The relative settings of the tungsten intensity control adjustment **3451** and the daylight intensity control adjustment **3452** generally determine the relative intensities between, in this example, the daylight LEDs **3404** and the tungsten LEDs **3403**. The intensity control circuits **3456**, **3457** may comprise analog and/or digital circuitry, and the relative outputs of the tungsten intensity control circuit **3456** and the daylight intensity control circuit **3456** generally determine the illumination level and composition. The operator may select more daylight illumination by increasing the relative intensity of the daylight LEDs **3304** or may select more tungsten illumination by increasing the relative intensity of the tungsten LEDs **3303**. The lighting effects system **3400** thereby may provide different combinations of daylight/tungsten coloration to match a wide variety of settings and circumstances, as with the **FIG. 33** embodiment.

[**0112**] Because the two different colors of LEDs (e.g., daylight and tungsten) can be controlled separately (through common or separate circuitry), and because these particular LEDs, or other similar complementary colors, do not have significant color shifts when dimmed, it would be relatively straightforward to adjust (e.g., cross-fade, cross-dim) between the two colors and, for example, provide a variety of natural light illumination effects for various types of common film stock.

[**0113**] The lighting apparatuses of **FIGS. 33 and 34** may, if desired, be physically embodied in a manner as described elsewhere herein; for example, the lighting apparatus may be embodied with a generally ring-shaped lighting frame as illustrated in and/or described with respect to **FIG. 4**, or with a portable frame such as generally illustrated in and/or described with respect to **FIG. 35**. The principles and underlying concepts associated with the embodiments of **FIGS. 33 and 34** may be extended to support more than two colors of lamp elements **3305** or **3405**. Moreover, the lighting apparatuses of **FIGS. 33 and 34** may utilize any number of lamp elements in a bi-color or other multi-color arrangement, in any desired pattern.

[**0114**] Returning now to the general diagram of a lighting effects system **201** illustrated in **FIG. 2** (although the following comments will apply to various other embodiments such as the lighting frame assembly shown in **FIGS. 3 and 4**), the LEDs or other low power lamps **205** may be operated at a standard direct current (DC) voltage level, such as, e.g., 12 volts or 24 volts, and may be powered by a power source **210** controlled by a power controller **212** such as generally shown in **FIG. 2**. The power source **210** can generally comprise a standard electrical outlet (i.e., nominal 110 volt AC power line), although in various embodiments the power source **210** could also be a battery having sufficient current to drive the LEDs or other low power lamps **205**. In some embodiments, the power controller **212** may be omitted, and the lighting frame **202** may be connected directly to the power source **210**.

[**0115**] Block diagrams of two different types of power controllers **212** as may be used in various embodiments as described herein are illustrated in **FIGS. 10A and 10B**, respectively. With reference to **FIG. 10A, a** first type of power controller **1012** has an input for receiving an AC power source **1003**, and outputs a plurality of power wires **1047** preferably through a cable (e.g., cable **213** shown in **FIG. 2**) for connection to the lighting frame **202**. The power controller **1012** may further comprise a power converter **1020**, the nature of which depends upon the type of power source **210**. If the power source is an AC source, the power converter **1020** may comprise an AC-to-DC converter and appropriate step-down power conversion circuitry (e.g., a step-down transformer). On the other hand, if the power source is a DC source (e.g., a battery), the power converter **1020** may comprise a DC-to-DC converter, if necessary. The design and construction of power converters is well known in the field of electrical engineering, and therefore is not be described herein in detail.

[**0116**] The power converter **1020** is preferably connected to a plurality of switches **1022**, which may be solid state devices (e.g., transistors) or analog devices (e.g., relays), each switch controlling power delivered by the power converter **1020** to one of the wires **1047** output by the power controller **1012**. A switch selector **1042** controls the on/off state each switch (or group) in the set of switches **1022**. A manual interface **1030** is provided to allow operation of the switches **1022** according to manual selection. The manual interface **1030** may include a master power switch **1031**, switch controls **1032**, and, optionally, an effects selector **1033**. The switch controls **1032** may include an individual manual switch, button or other selection means for each individual switch provided in the set of switches **1022**, or else may comprise a control mechanism (such as knob or reduced number of manual switches, buttons or other selection means) for selecting groups of switches **1022** according to predesignated arrangements. As but one example, assuming a light arrangement such as shown in **FIG. 4, a** knob provided as part of the switch controls **1032** could have a first setting to select all of the light segments **306**, a second setting to select every other light segment **306**, and a third setting to select every fourth light segment **306**, thus providing options of 100%, 50% and 25% total light output. The switch selector **1042** would then convert each knob setting to a set of control signals to the appropriate switches **1022**, which in turn would control power to the wires **1047** supplying power to the light segments **306**.

[**0117**] As another example, the switch controls **1032** could include an individual manual switch, button or other selection means for each light segment **306** or group of light segments **306** in the lighting arrangement.

[**0118**] An effects generator **1043** may optionally be included in the power controller **1012**, along with an effects selector **1033** which forms part of the manual interface **1030**. The effects generator **1043** may provide the ability to create various lighting effects, such as, e.g., dimming, strobing, pulsation, or pattern generation. The effects selector **1043** may affect all of the switches **1022** simultaneously, or else may affect individual switches or groups of switches **1022**, depending upon the desired complexity of the lighting

effects. Dimming may be accomplished, for example, through a manual control knob or multi-position switch on the effects selector **1033**. The dimming control may be electronically implemented, for example, in an analog fashion through a variable resistive element, or in a digital fashion by detecting the selected manual setting and converting it to selecting power setting through, e.g., selected resistive elements in a resistive ladder circuit. Where the switches **1022** are implemented, for example, as controllable variable amplifiers, the selectable resistance may be used to control the output of each amplifier and thereby the light output by the amplifier's respective light segment **306** (or group of light segments **306**). In other embodiments, the dimming control may optionally be applied to the output of switches **1022**. Where dimming control is applied collectively, it may be implemented by applying the selected dimming control level to the incoming signal from the power converter **1020**, which is supplied to all of the switches **1022** collectively. Other variations for implementing dimming control are also possible and will be apparent to those skilled in the art of electrical engineering.

[**0119**] Strobing may be accomplished by generating an oscillating signal and applying it as a control signal either upstream or downstream from the switch selector **1042**. The frequency of oscillation may be selectable via a manual knob, switch or other selection means as part of the effects selector **1033**.

[**0120**] Pattern generation may be accomplished by, e.g., manual selection from a number of predefined patterns, or else through an interface allowing different pattern sequencing. Patterns may include, for example, strobing or flashing different groups of light segments **306** (given the example of **FIG. 3**) in a predefined sequence (which may be a pseudo-random sequence, if desired), strobing or flashing different low power lamps **305** of the light segments **306** in a predefined (or pseudo-random) sequence, gradually dimming or brightening the light segments **306** (individually, in groups, or collectively), or various combinations of these effects.

[**0121**] Alternatively, rather than providing a separate effects selector **1033**, certain effects may be combined with the switch controls **1032**. For example, a dimmer switch (knob) could be used to both activate a light segment **306**, or group of light segments **306**, and also control light output via rotation of the dimmer switch (knob).

[**0122**] **FIG. 10B** is a block diagram showing another example of a power controller **1052** as may be used, for example, in the lighting effects system **200** of **FIG. 2** or other embodiments described herein. Like the power controller **1012** shown in **FIG. 10**A, the power controller **1052** shown in **FIG. 10B** includes a power source input **1053** connected to a power converter **1060**. It further includes a set of switches **1062** receiving power from the power converter **1060**, and providing power to individual wires **1097** which are conveyed, preferably by cable, to the lighting frame assembly **201** of the lighting effects system **200**. The power controller **1052** also includes a switch selector **1072**, which may comprise, for example, a set of registers which provide digital signals to the switches **1062** to control their on/off state.

[**0123**] The power controller **1052** includes a processor **1074** which may be programmed to provide various lighting effects by manipulating the switch selector **1072** (for example, by changing values in registers which control the on/off states of the switches **1062**). The processor **1074** may interface with a memory **1075**, which may comprise a volatile or random-access memory (RAM) portion and a non-volatile portion (which may comprise, e.g., ROM, PROM, EPROM, EEPROM, and/or flash-programmable ROM), the latter of which may contain programming instructions for causing the processor **1074** to execute various functions. The memory **1075** may be loaded through an I/O port **1076**, which may include an electrical serial or parallel interface, and/or an infrared (IR) reader and/or bar code scanner for obtaining digital information according to techniques well known in the field of electrical engineering and/or electro-optics. An interface **1080** may also be provided for programming or otherwise interfacing with the processor **1074**, or manually selecting various lighting effects options through selectable knobs, switches or other selection means, as generally explained previously with respect to **FIG. 10A**. The processor-based control system illustrated in **FIG. 10B** may also include other features and components which are generally present in a computer system.

[**0124**] In operation, the processor **1074** reads instructions from the memory **1075** and executes them in a conventional manner. The instructions will generally cause the processor **1074** to control the switch selector by, e.g., setting various digital values in registers whose outputs control the switches **1062**. The programming instructions may also provide for various lighting effects, such as dimming, strobing, pulsation, or pattern generation, for example. To accomplish dimming, the processor **1074** may be programmed select binary-encoded values to load into registers of the switch selector **1072**, which in turn select a variable resistance value which controls the output from each individual or group of switches **1062**. To accomplish strobing, the processor **1074** may be programmed to turn the switches **1062** on and off according to a predesignated pattern dictated by the programming instructions. The processor **1074** may make use of one or more electronic timers to provide timing between on and off events. The programming instructions may provide that the switches **1062** are turned on and off according to designated sequences, thus allowing the capability of pattern generation via the processor **1074**. As mentioned before, patterns may include, for example, strobing or flashing different groups of light segments **306** (given the example of **FIG. 3**) in a predefined (or pseudo-random) sequence, strobing or flashing different low power lamps **305** of the light segments **306** in a predefined (or pseudo-random) sequence, gradually dimming or brightening the light segments **306** (individually, in groups, or collectively), or various combinations of these effects.

[**0125**] Although the lighting frame **302** and lighting arrangement illustrated in **FIG. 3** provides various advantages, other lighting frames and other lighting arrangements may also be used in a lighting effects system, and may be employed in connection with various techniques as described herein.

[**0126**] Another embodiment of a lighting frame **1101**, for example, is illustrated in **FIG. 11**. The lighting frame **1101** shown in **FIG. 11** may be used in connection with a lighting effects system **201** such as shown in and previously described with respect to **FIG. 2**, and may be constructed

according to general principles described previously with respect to FIGS. **15**A-**15**C and **16**A-**16**E. As shown in **FIG. 11, a** lighting frame **1101** is generally ring-shaped and has an opening **1107** through which a camera or other image capture device can view. On the lighting frame **1101** may be mounted a plurality of lamps **1112** or in some instances even a single lamp **1112**. In the embodiment shown in **FIG. 11**, the lamps **1112** may be embodied as slim, narrow fluorescent "cold cathode" tubes with an internal phosphorous coating emitting visible light of certain wavelength (for example, a color temperature of around 3200 deg. K or 5500 deg. K, both of which temperatures are commonly used in film and photography applications). **FIG. 14** is a graph illustrating an example of a spectral distribution of light (in terms of light wavelength) in accordance with such a lighting effects system. The lamps **1112** are preferably oriented as illustrated in **FIG. 11**—that is, in a radial pattern, emanating from a centerpoint **1119** of the opening **1107** in the middle of the lighting frame **1101**. Where embodied as cold cathode tubes, the lamps **1112** may be of any suitable size, such as, e.g., 3 to 10 millimeters in diameter and 25 to 250 millimeters in length.

[**0127**] Preferably, the lamps **1112** are controllable such that they can produce higher intensity or lower intensity light, and/or can be turned on or off in selected groups to adjust the overall light level provided by the lighting system. One possible means for controlling the light intensity of lamps **1112** is illustrated in **FIG. 13**. As shown therein, a light control system **1301** includes a selector switch **1310** which has a plurality of settings **1312**, each of the settings **1312**, in this example, providing a different combination of lamps **1112** (shown as elements **1322** in **FIG. 13**). By way of illustration, a first setting may illuminate all of the lamps **1322**; a second setting may illuminate every other lamp **1322**; and a third setting may illuminate every fourth lamp **1322**, in each case providing a relatively even distribution of light but of a different overall intensity. For example, if 24 lamps were used, then the first setting would illuminate all 24 lamps, the second setting would illuminate 12 of the 24 lamps, and the third setting would illuminate six of the 24 lamps. The settings may correspond to any desired combination of lamps **1112**. For example, each setting may be designed to control an equal number of lamps **1112**, but in a different combination. The settings may be selected by any type of analog or digital input means (e.g., a manual knob, a set of switches or buttons, or a programmable interface), and any number of settings or programmable patterns may be offered.

[**0128**] Power for the lighting control system **1301** may be supplied by a battery **1305**, which may have a voltage rating of, e.g., 12 volts. The battery **1305** may be rechargeable in nature. Alternatively, or in addition, power may be provided from an alternating current (AC) source, such as a standard 120 volt electrical outlet, connected to an AC-to-DC power converter. The output of the battery **1305** may be controlled by a dimmer switch (not shown), to allow the light intensity level of lamps **1312** to be reduced. Alternatively, or in addition, dimming and/or pulsing can be controlled through a pulse width modulation (PWM) circuit **1317**. A first control means (e.g., a manual switch or knob, or programmable interface) (not shown) may be provided for dimming the lamps **1322**. For example, a manual knob may control the conductance of a variable resistor, thus allowing more power or less power to reach the lamps **1322**. In this way, the selected lamps **1322** may be brightened or dimmed, down to around 20% of their total light output. The PWM circuit **1317** may also, through a second control means (e.g., a manual switch or knob, or a programmable interface) allow pulsing of the light (i.e., a strobing effect) by adjustment of a pulse width modulation frequency. For example, a manual knob may control a variable resistive element, which in turn controls the width of pulses being generated by the PWM circuit **1317**. Various techniques for generating pulses of different widths using a variable resistive element to control the selection of the width are well known in the electrical arts.

[**0129**] Energy is preferably delivered to the various lamps **1322** in **FIG. 13** through a plurality of high frequency (HF) ballasts **1325**, which are capable of converting low DC voltage of the battery **1305** to high DC voltage (e.g., 800 to 1500 volts) for starting the lamp, and mid-level voltage (e.g., 170 to 250 volts) for sustaining lamp operation. Other techniques may also be used to deliver energy to the lamps **1322**.

[**0130**] While shown in a radial pattern in **FIG. 13**, the lamps **1322** (e.g., fluorescent tubes) may also be arranged in other patterns, such as patterns similar to those depicted, for example, in **FIGS. 30A, 30B** and **30**C. **FIG. 46** illustrates one example of a pattern of arranging fluorescent tubes (in this case, circular fluorescent tubes) on a lighting frame **4602**. In **FIG. 46, a** lighting assembly **4600** includes a ring-shaped lighting frame **4602** with two fluorescent lamps **4605**, an inner (small circumference) fluorescent lamp and an outer (larger circumference) fluorescent lamp. Additional fluorescent lamps (circular or otherwise) may also be added to the lighting frame **4202**, or else a single fluorescent lamp may in some cases be utilized. The lighting frame **4602** may, as previously described, be constructed of a lightweight, durable material, and it may have a bracket or other mounting mechanism for mounting to a camera frame or lens (with the camera lens preferably viewing through the generally central hole **4613** in the lighting frame **4602**), and/or a bracket or other mounting mechanism for allowing the lighting frame **4602** to be connected to a yoke or stand (such as conceptually represented by arm **4619** in **FIG. 46**). Energy for the fluorescent lamps **4605** may be provided as previously described herein, such that the lighting assembly **4600** can provide continuous light or, if applicable, various lighting effects.

[**0131**] **FIG. 12** is a diagram illustrating various options and accessories as may be used in connection with the lighting assembly frame depicted in **FIG. 11**. As shown in **FIG. 12**, the lighting frame **1101** may be augmented with a diffusion filter **1205** and/or a color filter **1215**, which may, if desired, be secured into place through a cover **1218** (e.g., a clear plastic cover) which locks or snaps onto the lighting frame **1101**. Similar accessories may be utilized, for example, in connection with the lighting frame **302** illustrated in **FIGS. 3 and 4**. Illustrations of filtering techniques, through the use of waveguides and other means, are described, for example, in U.S. Pat. Nos. 6,272,269 and 6,270,244, both of which are incorporated by reference herein in their entirety.

[**0132**] **FIG. 44** illustrates, among other things, an adjustable lens cover **4418** similar in general nature to the cover **1218** shown in **FIG. 12**. In the particular example illustrated

in **FIG. 44**, threading **4491** is provided on the outer surface of the lighting frame **4402** (which may be generally analogous to lighting frame **1101** shown in **FIG. 12**), and matching trheading **4492** is provided on the interior surface of the adjustable lens cover **4418**. The adjustable lens cover **4418** may be formed of clear plastic or a similar material and may be constructed with lenslike attributes (e.g., focal, diffusion) and/or may also be colorized if desired. The adjustable lens cover **4418** is secured to the lighting frame **4402** by twisting the cover **4418** onto the lighting frame **4402** in a screw-like fashion, thereby causing the threadings **4491**, **4492** to interlock. By the number of rotations of the lens cover **4418** with respect to the lighting frame **4402**, the distance of the "top" surface of the lens cover **4418** to the lighting elements **4405** on the lighting frame **4402** may be varied, thus allowing different lens effects. As further illustrated in **FIG. 44**, one or more coiled springs **4492** or other similar elements may be provided atop the lighting frame **4402**, to secure one or more color gels **4415** or other filtering objects against the inner "top" surface of the adjustable lens frame **4418**, when such objects are placed within the cover **4418** in the manner shown, for example, in **FIG. 12**.

[**0133**] As an alternative to the complementary threading provided on the lens cover **4418** and the lighting frame **4402**, other adjustment means may be provided. For example, the lens cover **4418** may be secured to the lighting frame **4402** by one or more adjustable screws which dictate the distance of the "top" surface of the lens cover **4418** from the lighting frame **4402**. Also, slide-and-lock mechanisms may be used as well.

[**0134**] It will be appreciated that, in various embodiments, a flexible, lightweight and functional lighting effects system is provided, whereby relatively uniform light may be used in illumination of a subject or area. The lighting effects system may, in various embodiments, allow a lighting frame to be secured to a camera or other image capture device, so as to permit the lighting system to be mobile and move in tandem with the camera or other image capture device, if desired. Also, in various embodiments, the lighting effects system may provide a variety of lighting patterns, including programmable patterns by which individual or groups of lights can be controlled for different lighting effects. The lighting frame may, in certain instances, be formed in multiple sections and hinged to allow the lighting frame to fold, or else snapped apart section by section, for ease of transport.

[**0135**] In various alternative embodiments, the lighting frame need not be ring-shaped in nature, as shown in **FIGS. 3 and 4**, for example, but could have other shapes as well. For example, the lighting frame may be square, hexagonal, octagonal, or other polygonal, or could, for instance, have a partially polygonal shape. Preferably, the lighting frame is relatively thin, as compared to its overall size, although it need not be. Also, the lighting frame preferably has a hole generally centered therein to allow a camera or other image capture device to view through the frame, although in some embodiments a viewing hole may not be present. The exterior portion of the lighting frame, or at least the exterior portion thereof, is preferably made of a lightweight, durable material such as plastic and/or lightweight metal (e.g., aluminum), optionally anodized, although in various embodiments it can be made of other materials as well, including any type of metal, wood, plastic, or combination thereof. The interior lighting frame portion may advantageously comprise a printed circuit board.

[**0136**] Other variations may pertain to the manner of attaching the lighting frame to a camera or other image capture device. Rather than using a single mounting bracket or assembly, for example, multiple mounting brackets or assemblies may be used. Also, the mounting bracket or assembly may be permanently attached or affixed to the lighting frame, and may be, for example, retractable or foldable for convenience of transportation. The lighting frame may attach either to the camera body or to the lens portion of the camera. The lighting frame may attach to the camera lens through any of a variety of means, such as by engaging an outer camera lens threading through a threading on the interior circular hole of the lighting frame, engaging an inner camera lens threading by providing a complementary threaded extension for that purpose, by a strap means to secure the lighting frame to the camera and/or stand, or by a "hose-clamp" type strap which grips the outer cylinder of the camera lens. Also, rather than attaching to the camera, the lighting frame may be portable, and may be outfitted with handles for lighting crew to manually carry or hold the lighting frame, or may be adapted to attach to a stand or fixture for providing stationary illumination. The lighting frame may also be adapted to attach to a machine arm or other contrivance for allowing the lighting effects system to be moved as needed for filming or other desired purposes.

[**0137**] Further embodiments, variations, and modifications pertain to the type of lamp elements that may be utilized in a lighting effects system and/or the manner of constructing a lighting frame particularly well suited for placing numerous lamp elements thereon. One method of construction involves the use of surface mount LEDs of the type illustrated, for example, in **FIG. 31**. As shown therein, a surface mount LED **3100** comprises a body **3104** having a thermal shoe on the bottom surface **3103** and a pair of soldering tabs **3102** for securing the surface mount LED **3100** to a circuit board (e.g., an aluminum core circuit board) or other suitable surface. A lens **3101** atop the body **3104** directs the light generated by the surface mount LED **3100** outwards. While the body **3104** and the lens **3101** of the surface mount LED **3100** radiate heat, the soldering tabs **3102** as well as the thermal shoe on the bottom surface **3103** assist in conducting heat to the mounting surface (e.g., circuit board) and thus may provide advantageous heat dissipation capabilities, particularly as compared to non-surface mount LEDs which tend to dissipate heat typically through their leads. Use of surface mount LEDs provides a larger and more direct heat conduction path to the mounting surface (e.g., circuit board), and may also provide advantages in ease of fabrication and improved durability.

[**0138**] In various embodiments as described herein, the lamp elements used in a lighting effects system or lighting apparatus may comprise high output semiconductor lights such as, for example, high output LEDs. Such high output LEDs are available from Lumileds Lighting, LLC of San Jose, Calif. under the product brand name Luxeon™. High output LEDs are presently available in white as well as colors such as green, blue, red, amber, and cyan, are fully dimmable, and generally operate at about one to several Watts (e.g., 5 Watts), outputting in certain devices approximately 24 lumens per Watt. The high output LEDs may be mounted upon, e.g., a metal printed circuit board (PCB) such

as an aluminum core circuit board. High output LEDs may be used in connection with any of the embodiments previously described herein, and may provide advantages of increased lighting output with fewer lamp elements and, hence, reduced cost of construction in certain cases. However, the driving circuitry for the high output LEDs would generally need to have a higher output rating than the circuitry used for lower power LEDs.

[0139] **FIGS. 36A and 36B** are diagrams of two other types of high output surface-mount LEDs, both of which are commercially available from Lumileds Lighting, LLC under the brand name Luxeon™. In **FIG. 36**A, the surface mount LED **3600** comprises an aluminum bottom plate **3611** atop of which is a printed circuit board (PCB) **3608** (e.g., a fiberglass board such as a standard FR4 board). A high output light source **3605** is mounted atop the PCB **3608**. The aluminum bottom plate **3611** acts as a thermal conveyance which assists in conduction of heat to a mounting surface (e.g., circuit board) for thermal dissipation. **FIG. 36C** shows an oblique view of the surface mount LED **3600** shown in **FIG. 36**A, illustrating, in this example, the relatively wide bottom plate **3611** relative to the size of the light source **3605**. The bottom plate **3611** and PCB **3608** preferably have notches **3615** through which screws may be placed to secure the surface mount LED **3600** to a mounting surface. **FIG. 36B** illustrates another surface mount LED **3650** that is similar in certain respects to the surface mount LED **3650** shown in **FIG. 36**A, with an aluminum bottom plate **3661** and printed circuit board **3658** (e.g., fiberglass board such as a standard FR4 board). However, in contrast to the surface mount LED **3600** shown in **FIG. 36**A, which is Lambertian (domed) in nature, the high output light source **3655** of surface mount LED **3650** is a side emitting light source. Other alternative types of surface mount LEDs, with similar or alternative mounting mechanisms, may also be utilized in various embodiments described herein.

[0140] **FIG. 37A** is a diagram of one embodiment of a lens cap **3702** for a single LED. The lens cap **3702** may act as a focusing lens to direct the light output from an LED in a forward (or other) direction. **FIGS. 37B and 37C** illustrate placement of the lens cap **3702** with respect to the surface mount LED **3600** of **FIG. 36A**. As illustrated, the protruding tabs **3704** on the base of the lens cap **3702** may be used to lock the lens cap **3702** into place by snugly residing in the holes **3615** of the base of the surface mount LED **3600**. A similar type of lens cap may be used for other types of LEDs. While six tabs **3704** are shown in the example of FIGS. **37**A-**37**C, the number of tabs, or the nature and/or shape of other alternative securing means, may depend upon the particular size, shape, and configuration of the LED base. Also, fewer tabs may be used if there is a desire leave some holes **3615** in the LED base available for receiving securing screws to hold the LED to a mounting surface. In such a case, the lens cap **3702** may be indented or otherwise shaped to allow relatively convenient access to the holes **3615** needed for attaching screws. The lens cap **3702** is illustrated as domed, but may be of any suitable shape for focusing light in a desired manner.

[0141] The lens cap **3702** may have an advantage in providing local effects on an individual basis for LEDs. Also, where different color lighting elements are placed within a single high output LED **3600**, the lens cap **3702** may be configured to provide local blending of the different colors according to a desired mix.

[0142] **FIGS. 37D and 37E** are diagrams illustrating another embodiment of a lens cap **3752** for an LED, and placement thereof with respect to a particular type of LED **3600**. With reference first to **FIG. 37**E, an illustrated embodiment of lens cap **3752** is shown from an oblique viewpoint in a generally funnel shape, with a cone-like or tapered portion **3753** and a short cylindrical portion **3754** at the apex (i.e., narrow end) of the tapered portion **3753**. The lens cap **3752**, including the cone-like tapered portion **3753**, is preferably transmissive in nature such that light travels through it substantially unimpeded. **FIG. 37**D, which is a side profile diagram, illustrates preferred placement of the lens cap **3752** with respect to a particular type of LED (that is, the LED **3600** illustrated in **FIGS. 36A and 36C**). The cylindrical portion **3754** of the lens cap **3752** rests atop the LED **3600**, with the tapered portion **3753** gradually widening away from the LED **3600**. A concave recess **3755** within the cylindrical portion **3754** may be provided, and is adapted to receive the curved lens **3605** of the LED **3600**, as illustrated in **FIG. 36D**. Light from the LED **3600** enters through the short cylindrical portion **3754** of the lens cap **3752**, and exits through the top surface **3759** (see **FIG. 37E**) thereof. The particular shape of the lens cap **3752** in **FIGS. 37D and 37E** serves to collect light from the LED **3600** that would otherwise emanate omnidirectionally, and focus the light in a generally conical beam emanating from the top of the lens cap **3752**, thus providing a light source with greater directivity.

[0143] The lens cap **3752** may be formed of, e.g., glass, plastic, or other suitable material or compound/layers of material, with any desired refractive index(es). One type of lens cap is commercially available, for example, from Lumileds Lighting, LLC.

[0144] **FIG. 32** is a generalized diagram of an array of surface mount LEDs **3202** (of the type such as shown, for example, in **FIG. 31, 36A**, or **36**B) mounted atop a circuit board **3204**, as may be used in various embodiments as described herein (for example, the lighting effects system illustrated in **FIG. 4**). The circuit board **3204** may comprise rigid fiberglass or phenolic planes with electrically conductive tracks etched on them, and/or may be metallic in nature (such as aluminum core PCBs). The term "circuit board" as used herein is meant to encompass the foregoing structures as well as various other types mounting apparatus, including flexible electrical interconnects such as conductive membranes made on thin Mylar, silicone, or other similar materials. The surface mount LEDs **3202** may be connected together in series and/or in parallel by electrical traces **3203** on the circuit board **3200**. While the LEDs **3202** are illustrated in **FIG. 32** as being in a straight line array, other LED patterns may also be utilized. As previously mentioned, the soldering tabs and thermal shoe on the bottom each of the surface mount LEDs **3202** generally assist in conducting heat to the circuit board **3204**, thus providing advantageous heat dissipation capabilities.

[0145] **FIG. 35** is a diagram of a lighting apparatus **3500** embodied as a panel **3502** having lighting arrays mounted thereon or therewith, in accordance with various embodiments as described herein. As illustrated in **FIG. 35**, the lighting apparatus **3500** comprises a panel **3502** which is

preferably flat and provides suitable surface area for mounting a set of lamp elements, such as lamp elements **3505** on circuit board assemblies **3506**. The circuit board assemblies **3506** may generally be constructed in accordance with the principles described with respect to **FIG. 32** above, and the lamp elements **3505** may comprise, for example, surface mount LEDs such as illustrated in **FIG. 31**. In the example shown, the lamp elements **3505** are generally arranged in series in a straight array formation, but the lamp elements **3505** may be arranged in other patterns as well. Likewise, the circuit board assemblies **3606** are illustrated in **FIG. 35** as being arranged in a symmetrical pattern of rows thus providing relatively even illumination in many scenarios, the circuit board assemblies **360** may be arranged in other symmetrical or non-symmetrical patterns, and may be grouped or clustered as well. Furthermore, while the panel **3202** is shown in **FIG. 35** as being generally rectangular in shape, the panel **3202** may take any suitable shape, including, for example, hexagonal, octagonal, or other polygonal or semi-polygonal, or round, oval, or ring-shaped (such as illustrated in **FIG. 4** for example).

[**0146**] Surface mount technology for the LEDs used in various embodiments as disclosed herein may simplify replacement of the LEDs (allowing "drop in" replacements for example) or else may allow easy replacement of an entire row or array of LEDs should it be desired to change the color of a particular group of LEDs. Also, the LED arrays may be constructed such that the LEDs have screw-in bases or other similar physical attachment means, such that the LEDs can be easily removed and replaced.

[**0147**] Various controls, power supply, and camera mounting means are not shown in **FIG. 35**, but may be employed in a manner similar to the various other embodiments as described herein. It will be appreciated that the control electronics, power supply, and other electrical components may be part of the panel **3202** or else may be separate therefrom. Furthermore, the lighting apparatus described with respect to **FIG. 35** may be embodied as a bi-color or other multi-color lighting system, as described with respect to, e.g., **FIGS. 33 and 34**.

[**0148**] The lighting apparatus **3500** of **FIG. 35** or other various lighting effects systems and apparatuses as described herein may include means for directing light at different angles. Such means may include, for example, pivotable light arrays which physically alter the angle of the lamp elements with respect to the frame (e.g., mounting) surface. The pivoting light arrays may be either manually controllable (via, e.g., a rotatable knob or crank) or electronically controllable through standard electronic input means (e.g., buttons or control knob). Such means may alternatively include adjustable lens elements (either individual or collective for an entire lens array or other group of lamp elements) for redirecting the illumination in a desired direction. Such means may further alternatively include, for example, groups of lamp elements wherein each group has a predetermined angle or range of angles with respect to the frame surface. Each group of lamp elements may be separately controllable, so that different groups can be separately activated or de-activated, or separately intensified or dimmed. With the ability to vary the angle of the lamp elements, the lighting effects system may, for example, allow the abrupt or gradual switching from one angle of illumination to another, or from a more targeted to a more dispersive illumination pattern (or vice versa).

[**0149**] **FIGS. 39 and 40** illustrate various panel light embodiments using surface mount LEDs. In **FIG. 39, a** panel light **3900** comprises one or more rows or arrays (in this example, two rows or arrays) of surface mount LEDs **3905** secured to a mounting surface **3902**. Screws **3996** are used in this example to secure the bases of the surface mount LEDs **3905** to the mounting surface **3902**. **FIG. 40** is similar, with a penal light **4001** having, in this example, four rows or arrays of surface mount LEDs **4005** securing to a mounting surface **4002** with, e.g., screws **4096**. The mounting surfaces **3902** or **4002** may comprise a circuit board, and thus LEDs **3905** or **4005** may be mounted directly to a circuit board type mounting surface. The circuit board may be attached to an outer frame of aluminum or another preferably lightweight material, to provide a solid structural support for the circuit board. Panel lights **3900** or **4001** such as shown in **FIGS. 39 and 40** may be used as relatively lightweight, portable lighting fixtures that generate less heat than incandescent lighting fixtures, and may be provided with handles for manual manipulation or with brackets or other means to connect to a yoke, stand, or other mechanical contraption. The panel lights **3900** and **4001** may use a ballast to supply power or, in some instances, may be directly connected to an AC electrical outlet (e.g., wall socket).

[**0150**] **FIG. 41A** illustrates a panel light **4100** of the general type shown, for example, in **FIGS. 39 and 40**, further illustrating a number of heat conductive fins **4112** which serve to assist with heat dissipation. The panel light **4100** may optionally include a means for facilitating attachment to a single- or multi-panel lighting assembly. In the present example, the panel light **4100** has a pair of T-shaped cutouts **4116** located in each of the fins **4112**, such that the T-shaped cutouts **4116** form a pair of straight line, T-shaped grooves through the series of fins **4112**. The T-shaped cutouts **4116** may be slid over a T-shaped bar to attach the panel light **4100** to a lighting assembly.

[**0151**] **FIG. 41B** is a diagram of an example of a multi-panel lighting assembly **4150**, illustrating attachment of a panel light **4100** as shown in **FIG. 41A** to the lighting assembly **4150**. In the example of **FIG. 41**B, the lighting assembly **4150** includes a pair of T-shaped bars **4165** which protrude from a lighting assembly frame **4160**, and which are matched to the T-shaped cutouts **4116** in the lighting panel **4100** of **FIG. 41A**. Once the lighting panel **4100** is slid into place along the T-shaped bars **4165**, they securely hold the lighting panel **4100** in place. Insulated caps (not shown), made of rubber or plastic for example, or other such means may be place on the ends of the T-shaped bars **4165** to prevent the lighting panel **4100** from sliding out of place. In the particular example shown, the multi-panel lighting assembly **4150** is configured to receive up to two lighting panels **4100** of the type shown in **FIG. 41**A, although such an assembly may be configured to receive any number of lighting panels **4100** depending upon the particular needs of the application. The multi-panel lighting assembly **4150** also has another lighting panel **4167** that may be "permanently" attached to or integral with the multi-panel lighting assembly **4150**, or else may likewise be attachable and detachable in the manner of lighting panel **4100**. The multi-panel lighting assembly **4150** thereby provides a lighting operator with a variety of lighting configurations in a single unit.

Other similar modular multi-panel lighting assemblies may be constructed according to the same or similar principles, having any number of panel lights in a variety of different sizes and/or shapes. The multi-panel lighting assembly **4150** may, in certain embodiments, be used in connection with a lighting stand such as illustrated, for example, in **FIG. 43** and described elsewhere herein.

[**0152**] Attachment of panel lights (such as, e.g., panel lights **4100**) to a of a multi-panel lighting assembly (such as, e.g., multi-panel lighting assembly **4150**) may be accomplished by a variety of means. For example, rather than using complementary bars **4165** and cutouts **4116**, the panel light **4100** may drop down and lock into an opening in the multi-panel lighting assembly **4150**. In such a case, the housing or frame of the multi-panel lighting assembly **4150** may have a molded beam with traverses the outer edge of the opening in which the panel light **4100** would be positioned. Locking tabs, for example, or other such means may be used to secure the dropped-in panel light **4100** within the opening if the multi-panel lighting assembly **4150**.

[**0153**] **FIG. 38A** is a diagram of ring-shaped lighting panel **3800** having surface mount LEDs **3805** (such as, e.g., the high output surface mount LEDs shown in **FIG. 36A** or **36**B) attached to a mounting surface of a frame **3802** which, as with the panel lights described before, may comprise a circuit board. The ring-shaped lighting panel **3800** may have a camera mounting bracket (not shown in **FIG. 38A**) and generally be utilized in a manner similar to the ring-shaped lighting assembly shown in **FIG. 4** and described in various places herein. The surface mount LEDs **3805** in the example of **FIG. 38A** are arranged in a plurality of rows or arrays **3806** emanating from the center of the hole or cutout region **3803** of the lighting panel **3800**. While a relatively dense pattern of LEDs **3805** is illustrated in **FIG. 38**A, the pattern may be less dense, and the LEDs **3805** need not necessarily be deployed in rows or arrays. Because the LEDs **1305** in this example are high output, the lighting panel **3800** outputs a greater total amount of light than with ordinary LEDs. Also, fewer LEDs need to be physically mounted on the lighting panel **3800**, which can reduce cost of construction.

[**0154**] **FIG. 38B** is a cross-sectional view of the lighting panel **3800** showing the inclusion of optional fins **3812** on the backside of the frame **3802**, to assist with heat dissipation. The fins **3812** are shown in cross-section, and form a set of parallel members similar to the fins **4112** shown in **FIG. 41A**.

[**0155**] **FIG. 42A** illustrates an integrated lens cover **4200** which can be placed atop, e.g., a panel light **4202** for providing focusing for a plurality of LEDs simultaneously. The panel light **4202** has rows of LEDs **4205**, similar to **FIGS. 39 and 40**, and the integrated lens cover **4210** may be placed atop the panel light **4202** and, e.g., snapped into place by taps **4212**, or otherwise secured to the frame of the panel light **4202**. **FIG. 42B** shows additional detail of the integrated lens cover **4210**. The integrated lens cover may be formed of any suitable lightweight, durable material (such as plastic) and preferably has a number of focal lens portions **4219** which, when the unit is placed atop the panel light **4202**, act as focal lenses for LEDs **4205** which are positioned directly beneath the focal lens portions **4219**. The integrated focal lens **4210** may thus allow the panel light **4202** to provide more directed, focused light (e.g., in a forward direction), rather than allowing the light to diffuse in an omnidirectional fashion. Alternatively, the integrated focal lens **4210** may provide other focusing effects that can be done with lenses. The focal lens portions **4219** may be domed or semi-domed, or else any other shape sufficient to serve their intended purpose.

[**0156**] **FIGS. 42C and 42D** are side profile diagrams illustrating further details of alternative embodiments of an integrated focal lens. **FIG. 42C** illustrates an integrated focal lens **4265** with tapered focal lenses **4251** emanating from the underside of the sheet-like surface **4250** of the integrated focal lens **4265**. In the instant example, the tapered focal lenses **4251** appear as inverted cone-like projections, with small concave recesses **4252** for receiving the dome-like lenses **4255** of LEDs **4256**, which are mounted to a mounting surface **4260**. The tapered focal lenses **4251** may be constructed in a manner as generally described previously with respect to **FIGS. 37D and 37E**, and may also have a short cylindrical portion **3754** such as illustrated in those figures, for resting atop the LEDs **4256** and providing added support to the top surface **4250** of the integrated focal lens **4265**. Alternatively, separate struts (not shown) may be molded to the underside of the integrated focal lens **4265** to provide such support. The integrated focal lens **4265** may, in certain embodiments, be constructed by attaching (using glue or solvent) individual, tapered focal lenses of the type illustrated in **FIGS. 37D and 37E** to the underside of a clear plastic sheet, and then providing securing means for the overall resulting lens device to allow it to secure to, e.g., a panel lighting fixture.

[**0157**] **FIG. 42D** illustrates an alternative embodiment of an integrated focal lens **4285**, with bubble-shaped or domed focal lenses **4271** on the topside of the sheet-like surface **4250** of the integrated focal lens **4285**. The focal lenses **4271** may be constructed in a manner as generally described previously with respect to FIGS. **37**A-**37**C, and may also have one or more projecting members or struts (not shown) on the underside of the integrated focal lens **4285** to provide support for the top surface **4270** thereof. Other shapes and styles of integrated focal lenses (or other lenses) may also be utilized for an integrated focal lens.

[**0158**] **FIG. 43** illustrates a panel lighting assembly **4300** in which a panel light frame **4302** is attached to a stand **4380**. The panel light frame **4302** may include multiple panel light sections **4303**, **4304**, or may be a single unitary panel light. The stand **4380** may be of a conventional nature, with a C-shaped yoke **4381** for securing the panel light frame **4302** crossbar and allowing it to tilt for directional lighting. A twisting handle **4317** may be used to lock the panel light frame **4302** at a particular tilting angle. The C-shaped yoke **4381** may be rotatable or pivotable by placement atop a fluid head **4382**, which in turn is positioned atop a stem **4384** and tripod **4386**. The panel lighting assembly **4300** thus conveniently provides a variety of directional lighting options for the panel light frame **4302**.

[**0159**] In alternative embodiments, a ball-and-socket mechanism may be used to rotate/pivot an attached lighting panel, using socket joints similar to those used for, e.g., computer monitors. Likewise, in any of the foregoing embodiments, motorization may be employed to control the movement of the lighting yokes or stands. Motorized control is well known in the art for lighting apparatus (particularly

in the performing arts field), and the motorized control may be either automated or manual in nature.

[0160] **FIG. 45** is a diagram of another embodiment of a lighting fixture **4500** employing semiconductor light elements. In **FIG. 45**, is shown a flexible strip **4502** with an array of surface mount LEDs **4505** mounted on the flexible strip **4502**. The flexible strip **4502** preferably comprises a circuit board that may be comprised, for example, of a material such as mylar or composite material, of sufficient thinness to allow the circuit board to be bent and/or twisted. The circuit board may be at least partially encased in an insulated (e.g., rubberized) material or housing that is likewise flexible and thin. Heat dissipating fins (not shown in **FIG. 45**) may protrude from the backside of the flexible strip **4502**, to assist with cooling of the surface mount LEDs **4505**. While a single array of surface mount LEDs **4505** is illustrated in the example of **FIG. 45**, two or more arrays of LEDs **4505** may be used, and may be positioned, e.g., side by side. An electrical connector **4540** with electrical contact receptacles **4541** is also illustrated in the example of **FIG. 45**, for receiving an electrical cord (not shown) supplying power for the LEDs **4505**. Other alternative means for providing electrical power, such as a battery located in an integrated battery housing, may also be used.

[0161] Certain embodiments have been described with respect to the placement of lamp elements (e.g., LEDs) on a "mounting surface" or similar surface or area. It will be appreciated that the term "mounting surface" and other such terms encompass not only flat surfaces but also contoured, tiered, or multi-level surfaces. Further, the term covers surfaces which allow the lamp elements to project light at different angles.

[0162] Various embodiments have been described as having particular utility to film and other image capture applications. However, the various embodiments may find utility in other areas as well, such as, for example, automated manufacturing, machine vision, and the like.

[0163] While preferred embodiments of the invention have been described herein, many variations are possible which remain within the concept and scope of the invention. Such variations would become clear to one of ordinary skill in the art after inspection of the specification and the drawings. The invention therefore is not to be restricted except within the spirit and scope of any appended claims.

What is claimed is:

1. An illumination system, comprising:

a portable frame;

a first plurality of controllable lamp elements secured to the portable frame; and

a second plurality of controllable lamp elements secured to the portable frame;

wherein said first plurality of lamp elements emit light over a first color temperature range suitable for image capture, and wherein said second plurality of lamp elements emit light over a second color temperature range suitable for image capture and different from said first color temperature range.

2. The illumination system of claim 1, wherein said first plurality of lamp elements and said second plurality of lamp elements comprise semiconductor light elements.

3. The illumination system of claim 2, wherein said semiconductor light elements comprise light emitting diodes (LEDs).

4. The illumination system of claim 3, wherein at least some of said LEDs comprise surface mount LEDs.

5. The illumination system of claim 4, wherein substantially all of said LEDs comprise surface mount LEDs.

6. The illumination system of claim 4, wherein said portable frame comprises one or more circuit boards, and wherein said surface mount LEDs are mounted on said one or more circuit boards.

7. The illumination system of claim 3, wherein said LEDs are high output.

8. The illumination system of claim 1, wherein said first color temperature range includes daylight color temperature.

9. The illumination system of claim 8, wherein said second color temperature range comprises tungsten color temperature.

10. The illumination system of claim 9, wherein the tungsten color temperature falls within a range of about 1000° Kelvin to about 4200° Kelvin, and wherein the daylight color temperature falls within a range of about 4200° Kelvin to about 9500° Kelvin.

11. The illumination system of claim 1, wherein said portable frame comprises a panel including a mounting surface to which said first plurality of controllable lamp elements and said second plurality of controllable lamp elements are secured.

12. A multi-color illumination system, comprising:

a first plurality of semiconductor light elements emitting light at a first color temperature range suitable for image capture;

a second plurality of semiconductor light elements emitting light at a second color temperature range suitable for image capture; and

a controller for providing adjustable relative illumination levels output by said first plurality of semiconductor light elements and said second plurality of semiconductor light elements.

13. The multi-color illumination system of claim 12, wherein said first plurality of semiconductor light elements and said second plurality of semiconductor light elements comprise light emitting diodes (LEDs).

14. The multi-color illumination system of claim 13, wherein at least some of said LEDs comprise surface mount LEDs.

15. The multi-color illumination system of claim 14, further comprising a portable frame having one or more circuit boards, and wherein said surface mount LEDs are mounted on said one or more circuit boards.

16. The multi-color illumination system of claim 15, wherein said portable frame comprises a substantially flat panel.

17. The multi-color illumination system of claim 13, wherein said LEDs are high output.

18. The multi-color illumination system of claim 12, wherein said first color temperature range includes daylight color temperature.

19. The multi-color illumination system of claim 18, wherein said second color temperature range comprises tungsten color temperature.

20. The multi-color illumination system of claim 19, wherein the tungsten color temperature falls within a range

of about 1000° Kelvin to about 4200° Kelvin, and wherein the daylight color temperature falls within a range of about 4200° Kelvin to about 9500° Kelvin.

21. An illumination system, comprising:

a portable frame comprising at least one circuit board;

a plurality of surface-mount semiconductor light elements electrically connected to said circuit board; and

a control input for selectively controlling an illumination level of said semiconductor lights.

22. The illumination system of claim 21, wherein said semiconductor light elements comprise light emitting diodes (LEDs).

23. The illumination system of claim 22, wherein said LEDs are high output.

24. The illumination system of claim 21, wherein said portable frame comprises a substantially flat panel.

25. The illumination system of claim 21, further comprising an integrated power source contained within or secured to said portable frame.

26. The illumination system of claim 25, wherein said power source comprises a battery.

27. The illumination system of claim 21, wherein a first plurality of said surface-mount semiconductor light elements emit light at a first color temperature range suitable for image capture, and a second plurality of said surface-mount semiconductor light elements emit light at a second color temperature range suitable for image capture.

28. The illumination system of claim 27, further comprising a controller for providing adjustable relative illumination levels output by said first plurality of surface-mount semiconductor light elements and said second plurality of surface-mount semiconductor light elements.

29. The illumination system of claim 27, wherein said first color temperature range includes daylight color temperature, and wherein said second color temperature range comprises tungsten color temperature.

30. The illumination system of claim 21, wherein said at least one circuit board includes two or more circuit boards.

31. The illumination system of claim 30, wherein each of said circuit boards is connected to a detachable panel member, and wherein said portable frame comprises temporary attachment means for securing each detachable panel member to the portable frame.

32. The illumination system of claim 21, wherein said portable frame dissipates heat generated by said surface-mount light elements.

33. The illumination system of claim 32, further comprising heat dissipating fins connected to said at least one circuit board.

34. The illumination system of claim 32, wherein said heat-dissipating portion of said portable frame is formed of a metallic material.

35. The illumination system of claim 21, wherein said portable frame is adapted to be manually dis-assembled and reassembled in sections.

36. The illumination system of claim 35, wherein said portable frame comprises a plurality of sectional members.

37. The illumination system of claim 21, wherein said semiconductor light elements emit light within a color temperature range suitable for image capture.

38. The illumination system of claim 21, wherein said portable frame is substantially ring-shaped, and is adapted for attachment to an imaging device which views through a central hole in said portable frame.

39. A portable, camera-mounted illumination source, comprising:

a panel-shaped portable frame attachable to a camera such that it follows movement of the camera, said portable frame having a front surface with a hole substantially in the center thereof through which the camera views when attached to said portable frame;

a circuit board integrated with said portable frame; and

a plurality of surface-mount semiconductor lamp elements electrically connected to said circuit board;

wherein said portable frame dissipates heat generated by said surface-mount semiconductor lamp elements.

40. The illumination source of claim 39, wherein said portable frame is relatively flat and ring-shaped.

41. The illumination source of claim 39, wherein said portable frame attaches to a lens of said camera.

42. The illumination source of claim 39, wherein said semiconductor lamp elements comprise light emitting diodes (LEDs).

43. The illumination source of claim 39, wherein said semiconductor light elements emit light within a color temperature range suitable for image capture.

44. A modular illumination system, comprising:

a portable frame;

a plurality of a panel members attachable to and detachable from the portable frame, each panel member having a plurality of semiconductor light elements attached thereto; and

at least one power source for providing power to said semiconductor light elements.

45. The modular illumination system of claim 44, wherein each of said panel members comprises attachment means for mating with complementary attachment means on said portable frame.

46. The modular illumination system of claim 44, wherein each of said panel members comprises a circuit board, and wherein said semiconductor light elements are surface mounted to the circuit board.

47. The modular illumination system of claim 46, wherein the circuit board of each panel member comprises a heat sink.

48. The modular illumination system of claim 46, wherein said portable frame acts as a heat sink to dissipate heat generated by semiconductor light elements on one or more of the panel members.

49. The modular illumination system of claim 44, wherein said semiconductor light elements comprise light emitting diodes (LEDs).

50. The modular illumination system of claim 44, wherein said at least one power source comprises a single power source for providing power to the semiconductor light elements on all of the panel members.

51. The modular illumination system of claim 44, wherein each of said panel members is substantially flat and rectangular, and is configured to be received by a corresponding slot in the portable frame.

52. The modular illumination system of claim 44, wherein said semiconductor light elements emit light within a color temperature range suitable for image capture.

53. The modular illumination system of claim 44, wherein said semiconductor light elements are arranged in rows on each panel.

54. The modular illumination system of claim 44, wherein said semiconductor light elements are arranged in a repeating pattern on each panel.

55. The modular illumination system of claim 44, further comprising a non-detachable lighting panel affixed to said portable frame, said non-detachable lighting panel comprising at least one semiconductor light element attached thereto.

56. The modular illumination system of claim 55, wherein each of said at least one semiconductor light element emits light within a color temperature range suitable for image capture.

57. The modular illumination system of claim 44, wherein said portable frame is configured to be attached to a yoke, whereby said portable frame may be rotated or tilted, or both.

58. An illumination system, comprising:

a mounting surface;

an array of semiconductor light elements disposed on said mounting surface; and

an integrated lens cover having a plurality of focal lenses for directing light output by said semiconductor light elements.

59. The illumination system of claim 58, wherein said array comprises a single row of semiconductor light elements.

60. The illumination system of claim 58, wherein said array comprises multiple rows of semiconductor light elements.

61. The illumination system of claim 58, wherein said semiconductor light elements comprise light emitting diodes (LEDs).

62. The illumination system of claim 61, wherein said mounting surface is part of a circuit board, and wherein said LEDs are surface mounted upon said circuit board.

63. The illumination system of claim 62, wherein said circuit board comprises or is attached to heat dissipating fins.

64. The illumination system of claim 62, wherein said LEDs are high output.

65. The illumination system of claim 58, wherein said semiconductor light elements emit light within a color temperature range suitable for image capture.

66. The illumination system of claim 58, wherein said mounting surface is part of a substantially flat panel.

67. The illumination system of claim 66, wherein said integrated lens is attachable to and detachable from the flat panel.

68. The illumination system of claim 66, wherein said integrated lens comprises a plurality of one focal lens for each of said semiconductor light elements.

69. The illumination system of claim 58, wherein said mounting surface is disposed upon a portable frame, and wherein said portable frame is attachable to a camera.

70. The illumination system of claim 58, wherein said integrated lens cover comprises a sheet to which said focal lenses are attached and which is transmissive at each of said focal lenses, and wherein each of said focal lenses comprises a transmissive cone portion having a wide end and a narrow end, with the wide end of the transmissive cone being flush with the underside of the sheet.

71. The illumination system of claim 58, wherein said integrated lens cover comprises a sheet to which said focal lenses are attached and which is transmissive at each of said focal lenses, and wherein each of said focal lenses comprises a domed lens portion for placement above one of said semiconductor light elements.

72. A lighting apparatus, comprising:

a frame;

a plurality of semiconductor light elements;

a power source for supplying energy to said semiconductor light elements; and

an adjustable lens cover attachable to said frame.

73. The lighting apparatus of claim 72, wherein said frame comprises a panel having a surface upon which said semiconductor light elements are disposed.

74. The lighting apparatus of claim 73, wherein said panel is substantially circular.

75. The lighting apparatus of claim 74, wherein said adjustable lens cover is substantially circular and configured to mate with said panel.

76. The lighting apparatus of claim 75, further comprising attachment means on said adjustable lens cover for securing the adjustable lens cover to said panel.

77. The lighting apparatus of claim 76, wherein said attachment means comprises complementary threading on an exterior surface of said panel and an interior surface of said adjustable lens cover.

78. The lighting apparatus of claim 75, wherein said panel defines a central hole.

79. The lighting apparatus of claim 78, wherein said frame attaches to a camera and follows the movements thereof, and wherein the camera views through said hole when attached to said frame.

80. The lighting apparatus of claim 73, further comprising means for gripping a light adjusting element between said surface and the adjustable lens cover.

81. The lighting apparatus of claim **80**, wherein said light adjusting element comprises a color gel.

82. The lighting apparatus of claim **81**, wherein said means for gripping comprises at least one spring disposed upon said surface, said spring applying pressure to one side of said light adjusting element while an opposite side of said light adjusting element is thereby pressed against said adjustable lens cover.

83. The lighting apparatus of claim 73, wherein said semiconductor light elements comprise light emitting diodes (LEDs).

84. The lighting apparatus of claim **83**, wherein said light emitting diodes are high output.

85. The lighting apparatus of claim **83**, wherein said semiconductor light elements emit light within a color temperature range suitable for image capture.

* * * * *