UNITED STATES PATENT AND TRADEMARK OFFICE

BEFORE THE PATENT TRIAL AND APPEAL BOARD

QUASAR SCIENCE LLC
Petitioner,
v.
COLT INTERNATIONAL CLOTHING, INC. d/b/a COLT LED
Patent Owner.

Case: IPR2023-00613
U.S. Patent No. 10,411,582

PETITIONER'S NOTICE OF APPEAL

Notice is hereby given that, pursuant to 35 U.S.C. §§ 141, 142, 319, and 37 C.F.R. §§ 90.2-90.3, Petitioner Quasar Science LLC ("Quasar") hereby appeals to the United States Court of Appeal for the Federal Circuit from the Final Written Decision entered on October 7, 2024, (Paper 72), from all underlying findings, determination, rulings, opinions, orders and decisions regarding U.S. Patent No. 10,411,582 ("the '582 patent"). A copy of the Final Written Decision is attached.

In accordance with 37 C.F.R. §90.2(a)(3)(ii), Quasar further indicates that the issues on appeal include, but are not limited to, the following: (1) the Board's determination that claims 1–3, 6–14, 16–19, 21–24, and 26–31 of the '582 patent are not unpatentable based on the grounds presented in the petition; (2) the Board's claim constructions, factual findings, conclusions of law, and other determinations supporting or related to the aforementioned issue; and (3) all other issues decided adversely to Quasar in any orders, decisions, rulings, and opinions.

Copies of this Notice of Appeal are being filed simultaneously with the Patent Trial and Appeal Board and with the Clerk's Office for the United States Court of Appeals for the Federal Court.

Respectfully submitted,

Dated: December 6, 2024 By: /Heath J. Briggs/

Reg. No. 54,919
Greenberg Traurig, LLP
1144 15th Street, Suite 3300
Denver, CO 80202
T: (303) 685-7418
Counsel for Petitioner

CERTIFICATES OF FILING AND SERVICE

I hereby certify that this Notice of Appeal was electronically filed using the Patent Trial and Appeal Case Tracking System (P-TACTS) on December 6, 2024.

In accordance with 37 C.F.R. §90.2 and the instructions provided on the United States Patent and Trademark Office's web page for the Office of the General Counsel (https://www.uspto.gov/about-us/organizational-offices/office-general-counsel), I hereby further certify that, on December 6, 2024, a true and correct copy of this Notice of Appeal was caused to be electronically filed with the Director by email sent to the following email address: efileSO@uspto.gov.

I hereby further certify that, on December 6, 2024, a true and correct copy of this Notice of Appeal is being sent via Priority Mail Express to the following address:

Office of the Solicitor
United States Patent and Trademark Office
Mail Stop 8
P.O. Box 1450
Alexandria, VA 22313

I hereby further certify that, on December 6, 2024, and pursuant to Federal Circuit Rules 15(a)(1) and 25(b)(1), a true and correct copy of this Notice of Appeal is being filed electronically by CM/ECF, with the $600 filing fee being paid through pay.gov, with the United States Court of Appeals for the Federal Circuit.

I hereby further certify that, on December 6, 2024, this Notice of Appeal is being served upon the following counsel of record for Patent Owner via electronic mail:

- dhoffman@nolanheimann.com
- rkatz@katzfirm.com

Dated: December 6, 2024

By: /Heath J. Briggs/
Reg. No. 54,919
Greenberg Traurig, LLP
1144 15th Street, Suite 3300
Denver, CO 80202
Counsel for Petitioner

Trials@uspto.gov
571-272-7822

Paper 72
Date: October 7, 2024

UNITED STATES PATENT AND TRADEMARK OFFICE

BEFORE THE PATENT TRIAL AND APPEAL BOARD

QUASAR SCIENCE LLC,
Petitioner,

v.

COLT INTERNATIONAL CLOTHING, INC. d/b/a COLT LED,
Patent Owner.

IPR2023-00613
Patent 10,411,582 B1

Before GEORGIANNA W. BRADEN, ZHENYU YANG, and ROBERT J. WEINSCHENK, *Administrative Patent Judges*.

WEINSCHENK, *Administrative Patent Judge*.

JUDGMENT
Final Written Decision
Determining No Challenged Claims Unpatentable
35 U.S.C. § 318(a)

I. INTRODUCTION

A. Background and Summary

Quasar Science LLC ("Petitioner") filed a Petition (Paper 2, "Pet.") requesting an *inter partes* review of claims 1–3, 6–14, 16–19, 21–24, and 26–31 ("the challenged claims") of U.S. Patent No. 10,411,582 B1 (Ex. 1001, "the '582 patent"). Colt International Clothing, Inc. d/b/a Colt LED ("Patent Owner") filed a Preliminary Response (Paper 6, "Prelim. Resp.") to the Petition. We instituted an *inter partes* review of the challenged claims on October 10, 2023. Paper 8 ("Dec. on Inst."), 25. After institution, Patent Owner filed a Response (Paper 29, "PO Resp.")[1] to the Petition, Petitioner filed a Reply (Paper 54, "Pet. Reply") to the Response, and Patent Owner filed a Sur-reply (Paper 69, "PO Sur-reply")[2] to the Reply. We held an oral hearing on July 16, 2024, and a transcript of the hearing is included in the record. Paper 71 ("Tr.").

For the reasons set forth below, Petitioner has not shown by a preponderance of the evidence that the challenged claims of the '582 patent are unpatentable.

B. Real Parties in Interest

Petitioner identifies the following real parties in interest: 1) Quasar Science LLC; 2) Videndum Production Solutions, Inc.; 3) Videndum US Holdings Inc.; 4) Videndum Holdings, Ltd.; 5) Videndum Investments

[1] We cite to a non-public version of the Response, but Patent Owner also filed a public version. *See* Paper 48.

[2] We authorized Patent Owner to file a replacement version of the Sur-reply to redact an error on pages 7 and 8.

Limited; 6) Videndum Group Holdings, Ltd.; and 7) Videndum plc. Pet. 4. Patent Owner identifies itself as the only real party in interest. Paper 3, 2.

C. Related Matters

The parties indicate that the ’582 patent is the subject of the following district court case: *Colt International Clothing, Inc. d/b/a Colt LED v. Quasar Science LLC*, No. 22-cv-00213 (D. Del.). Pet. 5; Paper 3, 2. Patent Owner also indicates that patents related to the ’582 patent are the subject of petitions for *inter partes* review in IPR2023-00611 and IPR2023-00614. Paper 3, 2–3. We previously granted Patent Owner’s request for adverse judgment in IPR2023-00611. IPR2023-00611, Paper 61.

D. The ’582 Patent

The ’582 patent relates to “a lighting system comprising a tube light with an improved [light-emitting diode (“LED”)] array capable of producing light within at least two predetermined color temperature ranges.” Ex. 1001, 1:20–23. The ’582 patent states that when “accurate and suitable lighting color temperature is vital, lighting ‘gels’ are often used in conjunction with fluorescent lamps to produce the desired color temperature.” *Id.* at 2:9–12. Otherwise, “a lighting crew must continually change the fluorescent lamps between daylight white (or day white) colored lamps and tungsten (or warm white) colored lamps, or if desired, other types of white/light colored lamps.” *Id.* at 2:23–27.

According to the ’582 patent, “[w]hat is desired is a lighting solution suitable for the lighting industry implementing the advantages of LED lights which allows for evenly dispersed light controllable within specific color temperature parameters without the need to physically switch out colored gels or lamp modules.” *Id.* at 3:5–10. To do so, the ’582 patent describes an

LED light system that includes "a first type of LED bulbs configured to provide a first color temperature range light and a second type of LED bulbs configured to provide a second color temperature range light." *Id.* at 4:66–5:5. The LED light system includes circuitry "configured such that only one group of LEDs . . . can be turned on at a time." *Id.* at 5:58–60. The "intensity of the light is preferably at least 1000 lux" for each group of LEDs so that the LED light system is "suitable for use in the stage lighting industry." *Id.* at 2:50–56. The LED light system also "maintain[s] the shape and interface of a traditional fluorescent lamp so as to allow maximum usability." *Id.* at 3:10–14.

E. Illustrative Claim

Of the challenged claims, claims 1, 18, and 23 are independent. Claim 1 is reproduced below.

> 1. An LED light system configured for providing broad-spectrum white light suitable for a commercial image recording, in a form factor of a fluorescent light tube lamp, the LED light system comprising:
>
> a housing having ends and including a support structure in a form of an elongated and narrow surface having a top side and a bottom side;
>
> a plurality of first LEDs mounted on the top side of the support structure and configured to emit broad-spectrum white light in a first predetermined Kelvin temperature range of cool white light;
>
> a plurality of second LEDs mounted on the top side of the support structure and configured to emit broad-spectrum white light in a second predetermined Kelvin temperature range of warm white light;
>
> electronic circuitry mounted to the support structure including an LED driver circuit configured for selectively electronically switching between driving either (i) the first

LEDs, to provide light while the second LEDs are off; or (ii) the second LEDs, to provide light while the first LEDs are off, wherein the first and second predetermined Kelvin temperature ranges are nonoverlapping, and including a printed circuit board mounted to the support structure for carrying electrical power from a connection to the LED driver circuit and then to the first and second LEDs; and

an elongate cover extending substantially a length of the support structure and covering the top side of the support structure for diffusing light emitted by the first and second LEDs; and

wherein the housing and cover together have a linear form factor of a fluorescent light tube lamp having a diameter of no greater than approximately 41 mm,

wherein the LED light system is configured for receiving input power to be provided to the LED driver circuit to selectively light the first or second LEDs, and

wherein the first and second LEDs are disposed in a plurality of rows distributed along the length of the top side of the support structure to emit light, when selectively lit by the LED driver circuit, along the length of the top side of the support structure,

wherein the light is diffused by the cover and is suitable for the commercial image recording both when the emitted light from the LED light system is in the first temperature range of cool white light and when the emitted light from the LED light system is in the second temperature range of warm white light,

wherein the light emitted from the LED light system is said suitable for the commercial image recording when said emitted light: (i) is at least 1000 lumens when the first LEDs are lit and is also at least 1000 lumens when the second LEDs are lit; (ii) is broad-spectrum white light having a color deviation corresponding to less than five points of green and less than five points of magenta (5M, 5G) of color compensation (CC), and (iii) has a color rendering index of light emitted from each of the first LEDs or each of the second

> LEDs, whichever respective plurality of first or second LEDs is lit, that is greater than 90.

Ex. 1001, 12:4–62.

F. Evidence of Record

Petitioner submits the following evidence:

Evidence	Exhibit No.
Declaration of Fred Holmes ("Holmes Declaration")	1003
Kit, US 7,507,001 B2, issued Mar. 24, 2009 ("Kit")	1004
Ducharme, US 7,350,936 B2, issued Apr. 1, 2008 ("Ducharme")	1005
Katzir, US 2010/0102729 A1, published Apr. 29, 2010 ("Katzir")	1006
Ianiro, WO 2009/063520 A1, published May 22, 2009 ("Ianiro")	1007
Hasnain, US 8,668,361 B2, issued Mar. 11, 2014 ("Hasnain")	1008
Supplemental Declaration of Fred Holmes ("Holmes Supplemental Declaration")	1049
Declaration of Raymond Gonzales ("Gonzales Declaration")	1059

Patent Owner submits the following evidence:[3]

Evidence	Exhibit No.
Declaration of Todd Csernecky ("Csernecky Declaration")	2041
Declaration of Kevin Baxter ("Baxter Declaration")	2047
Declaration of David L. Hoffman ("Hoffman Declaration")	2051
Declaration of Fernando Silva ("Silva Declaration")	2066
Declaration of Bruce Wonderlick ("Wonderlick Declaration")	2067
Declaration of Guillermo Macias ("Macias Declaration")	2068
Declaration of Bradley W. Brunon ("Brunon Declaration")	2078

[3] The parties jointly requested that we expunge the Declaration of Bruce L. Finn (Ex. 2094, "Finn Declaration") and assign no weight to any citations to the Finn Declaration in Patent Owner's Response. Paper 58, 2. To maintain the record for a potential appeal, we do not expunge the Finn Declaration. Rather, we give no weight to the Finn Declaration and any citations thereto.

Evidence	Exhibit No.
Declaration of Gary R. Allen, Ph.D. ("Allen Declaration")	2080
Declaration of Ken Fisher ("Fisher Declaration")	2100

G. Asserted Challenges to Patentability

Petitioner asserts that claims 1–3, 6–14, 16–19, 21–24, and 26–31 are unpatentable based on the following challenges:

Claim(s) Challenged	35 U.S.C. §	Reference(s)/Basis
1–3, 6–14, 16–19, 21–24, 26–31	103	Kit, Ianiro, Ducharme, Katzir
1–3, 6–14, 16–19, 21–24, 26–31	103	Ducharme, Ianiro, Katzir, Hasnain

II. ANALYSIS

A. Legal Standards

A claim is unpatentable as obvious under 35 U.S.C. § 103(a) if the differences between the claimed subject matter and the prior art are such that the subject matter as a whole would have been obvious at the time the invention was made to a person having ordinary skill in the art to which the subject matter pertains. *KSR Int'l Co. v. Teleflex Inc.*, 550 U.S. 398, 406 (2007). The question of obviousness is resolved on the basis of underlying factual determinations, including 1) the scope and content of the prior art; 2) any differences between the claimed subject matter and the prior art; 3) the level of ordinary skill in the art; and 4) any objective indicia of non-obviousness. *Graham v. John Deere Co.*, 383 U.S. 1, 17–18 (1966).

B. Level of Ordinary Skill in the Art

Petitioner argues that a person of ordinary skill in the art would have had "at least a Bachelor of Science degree in electrical engineering, or a closely related field, along with at least two years of experience in the design

of entertaining lighting systems, and the design and use of LED lights." Pet. 13 (citing Ex. 1003 ¶ 32). Patent Owner argues that a person of ordinary skill in the art would have had "2 to 4 years' experience in electrical engineering/design of film and television lighting systems, including the design and use of LED lights, combined with two to three years of work experience as a set lighting technician in television and/or motion picture industry." PO Resp. 8–9 (citing Ex. 2047 ¶¶ 16–17; Ex. 2100 ¶¶ 156–161).

Patent Owner does not identify any specific instance in which the differences between the parties' respective descriptions of the level of ordinary skill in the art impacts the analysis or conclusions of either party, or either party's declarant, in this case. *See id.* In fact, Patent Owner acknowledges that any differences between the parties' respective descriptions do not impact the conclusions in this case. *Id.* at 9 ("Regardless of which definition . . . is applied, the conclusion(s) would be the same."). Therefore, to the extent necessary, we adopt Petitioner's description, which is supported by the testimony of Petitioner's declarant, Mr. Fred Holmes, and is consistent with the asserted prior art. Ex. 1003 ¶ 32.

C. Claim Construction

In an *inter partes* review proceeding, a patent claim is construed using the same standard used in a civil action under 35 U.S.C. § 282(b), including construing the claim in accordance with the ordinary and customary meaning of the claim as understood by one of ordinary skill in the art and the prosecution history pertaining to the patent. 37 C.F.R. § 42.100(b). Neither party proposes an express construction for any claim terms. Pet. 13; PO Resp. 10. We determine that no claim terms require an express construction

to resolve the parties' disputes regarding the asserted grounds of unpatentability. *See* Sections II.D.1, II.E.1.

D. Alleged Obviousness of Claims 1–3, 6–14, 16–19, 21–24, and 26–31 over Kit, Ianiro, Ducharme, and Katzir

Petitioner argues that claims 1–3, 6–14, 16–19, 21–24, and 26–31 would have been obvious over Kit, Ianiro, Ducharme, and Katzir. Pet. 14–47. For the reasons discussed below, Petitioner has not shown by a preponderance of the evidence that claims 1–3, 6–14, 16–19, 21–24, and 26–31 would have been obvious over Kit, Ianiro, Ducharme, and Katzir.

1. Claim 1

Claim 1 recites an "LED light system" comprising "a plurality of first LEDs . . . configured to emit broad-spectrum white light in a first predetermined Kelvin temperature range of cool white light," and "a plurality of second LEDs . . . configured to emit broad-spectrum white light in a second predetermined Kelvin temperature range of warm white light." Ex. 1001, 12:4–7, 12:11–18. Petitioner asserts that Kit teaches a "plurality of LED arrays . . . configured to emit broad-spectrum white light in various predetermined Kelvin temperature ranges, including cool and warm white light." Pet. 23–24 (citing Ex. 1003 ¶¶ 118, 120–121; Ex. 1004, 3:20–38, 22:9–35, 121:7–38). Petitioner also asserts that Katzir teaches "daylight and tungsten temperature ranges within the claimed temperature ranges." *Id.* at 24 (citing Ex. 1006 ¶¶ 53–54, Figs. 5A–5B). According to Petitioner, "Katzir discloses various LED array layouts that a [person of ordinary skill in the art ("POSITA")] would have looked to when designing an LED tube lighting like that disclosed in Kit." *Id.* at 18–19 (citing Ex. 1003 ¶ 102).

Patent Owner argues that Petitioner does not show sufficiently that the Kit, Ianiro, Ducharme, and Katzir combination teaches an LED light system

with first LEDs configured to emit cool white light and second LEDs configured to emit warm white light. PO Resp. 39–40. Specifically, Patent Owner contends that "Kit lacks any disclosure of a bicolor luminaire with cool white and with warm white LEDs." *Id.* at 39. According to Patent Owner, Kit teaches "matching LEDs to get a consistent color temperature output," not providing "both cool white and warm white LEDs in the same luminaire." *Id.* at 40.

We determine that Petitioner does not show sufficiently that Kit teaches an LED light system with first LEDs configured to emit cool white light and second LEDs configured to emit warm white light. Petitioner identifies three portions of Kit as allegedly teaching the above limitations of claim 1. Pet. 23–24 (citing Ex. 1004, 3:20–38, 22:9–35, 121:7–38). The first cited portion of Kit states the following:

> The solution to the wide manufacturing tolerances for achieving a consistent color temperature and intensity was to introduce color-matched white Luxeon Lamps, each containing multiple white Luxeon LEDs that are selected by advanced binning algorithms. By correctly combining an appropriate mix of LEDs, the Luxeon Lamps themselves have well-controlled and consistent color temperatures of 3200K (warm white), 4100K (commercial white) or 5500K (cool white).

Ex. 1004, 3:28–36. Petitioner does not explain specifically how this portion of Kit teaches an LED light system with first LEDs configured to emit cool white light and second LEDs configured to emit warm white light. *See* Pet. 23–24. Instead, this portion of Kit addresses the problem of "wide manufacturing tolerances" by providing a light with "an appropriate mix of LEDs" that produce a single, consistent temperature of warm white, commercial white, or cool white. Ex. 1004, 3:28–36.

The second cited portion of Kit states the following:

> More recently, Lumileds Lighting, LLC now offers a Luxeon warm white LED with a 90 CRI (Color Rendering Index) and 3200 degrees Kelvin CCT (Correlated Color Temperature). Lumileds Luxeon warm white is the first generally available low CCT and high CRI warm white solid-state light source. . . . An alternate arrangement to get similar CRI and CCT would be to use existing high CCT white color LEDs with a combination of yellow or amber color LEDs to achieve the desired color tone.

Id. at 22:9–25. Petitioner again does not explain specifically how this portion of Kit teaches an LED light system with first LEDs configured to emit cool white light and second LEDs configured to emit warm white light. *See* Pet. 23–24. Rather, this portion of Kit teaches an "arrangement" with "a combination" of "white color LEDs" and "yellow or amber color LEDs" that achieves a single temperature of 3200 degrees Kelvin. Ex. 1004, 22:9–25.

The third cited portion of Kit states that "[s]ingle LED array 1394 controlled by dimmer 1408 can represent multiple LEDs arrays 1394A each correspondingly controlled by one of a plurality of dimmers 1408A and each independently controlled by computer or logic gate array 1406." Ex. 1004, 121:32–36. Petitioner again does not explain specifically how this portion of Kit teaches an LED light system with first LEDs configured to emit cool white light and second LEDs configured to emit warm white light. *See* Pet. 23–24. Although this portion of Kit mentions "multiple LED arrays," the cited portion does not indicate that those LED arrays include first LEDs configured to emit cool white light and second LEDs configured to emit warm white light. Ex. 1004, 121:32–36.

We also determine that Petitioner does not show sufficiently that it would have been obvious to combine the cited teachings of Kit and Katzir.

Petitioner cites to the Holmes Declaration to show a rationale for the proposed combination. Pet. 18–19 (citing Ex. 1003 ¶ 102). The cited portion of the Holmes Declaration states the following:

> Both Kit and Katzir teach using LED[s] of various colors in a fluorescent tube form factor, like a T8 or T12 fluorescent tube. Katzir also discloses various LED array layouts that a POSITA would have a looked to when designing an LED tube lighting like that disclosed in Kit. A POSITA would have had strong motivation to look to Katzir to design an LED array to be retrofit in a fluorescent tube form factor.

Ex. 1003 ¶ 102 (internal citations omitted). As discussed above, the cited teachings from Kit describe an LED light system that produces a single, consistent temperature. Ex. 1004, 3:28–36, 22:9–25. Neither Petitioner nor Mr. Holmes explains specifically *why* a person of ordinary skill in the art would have modified Kit to include Katzir's particular layout that has both first LEDs configured to emit cool white light and second LEDs configured to emit warm white light. *See* Pet. 18–19, 24; Ex. 1003 ¶ 102; *In re Nuvasive, Inc.*, 842 F.3d 1376, 1382 (Fed. Cir. 2016) ("[T]he PTAB must articulate a *reason why* a [person of ordinary skill in the art] would combine the prior art references.").

For the foregoing reasons, Petitioner does not show sufficiently that claim 1 would have been obvious over Kit, Ianiro, Ducharme, and Katzir. We identified the aforementioned deficiencies for this asserted ground in the Decision on Institution. Dec. on Inst. 10–12. Petitioner did not respond to those deficiencies in the Reply or at the oral hearing. *See* Pet. Reply 2–17; Tr. 6:16–7:10.

2. Claims 18 and 23

Claims 18 and 23 recite limitations similar to those discussed above for claim 1. Ex. 1001, 14:4–11, 15:31–38. Petitioner's arguments and evidence for claims 18 and 23 do not compensate for the deficiencies discussed above for claim 1. *See* Pet. 40–45. Thus, for the same reasons discussed above for claim 1, Petitioner does not show sufficiently that claims 18 and 23 would have been obvious over Kit, Ianiro, Ducharme, and Katzir.

3. Claims 2, 3, 6–14, 16, 17, 19, 21, 22, 24, and 26–31

Claims 2, 3, 6–14, 16, 17, 19, 21, 22, 24, and 26–31 depend, directly or indirectly, from claim 1, 18, or 23. Petitioner's arguments and evidence for claims 2, 3, 6–14, 16, 17, 19, 21, 22, 24, and 26–31 do not compensate for the deficiencies discussed above for claims 1, 18, and 23. *See* Pet. 35–40, 43–44, 46–47. Thus, for the same reasons discussed above for claims 1, 18, and 23, Petitioner does not show sufficiently that claims 2, 3, 6–14, 16, 17, 19, 21, 22, 24, and 26–31 would have been obvious over Kit, Ianiro, Ducharme, and Katzir.

4. Summary

For the foregoing reasons, Petitioner has not shown by a preponderance of the evidence that claims 1–3, 6–14, 16–19, 21–24, and 26–31 would have been obvious over Kit, Ianiro, Ducharme, and Katzir.

E. Alleged Obviousness of Claims 1–3, 6–14, 16–19, 21–24, and 26–31 over Ducharme, Ianiro, Katzir, and Hasnain

Petitioner argues that claims 1–3, 6–14, 16–19, 21–24, and 26–31 would have been obvious over Ducharme, Ianiro, Katzir, and Hasnain. Pet. 47–75. For the reasons discussed below, Petitioner has not shown by a

preponderance of the evidence that claims 1–3, 6–14, 16–19, 21–24, and 26–31 would have been obvious over Ducharme, Ianiro, Katzir, and Hasnain.

1. Claim 1

Claim 1 recites an "LED light system . . . in a form factor of a fluorescent light tube lamp" comprising "a housing having ends and including a support structure in a form of an elongated and narrow surface having a top side and a bottom side" and "an elongate cover extending substantially a length of the support structure and covering the top side of the support structure for diffusing light emitted by the first and second LEDs." Ex. 1001, 12:4–10, 12:30–33. Petitioner asserts that Ducharme teaches these limitations. Pet. 51–53 (citing Ex. 1005, 5:7–33, 12:49–53, 29:16–60, Figs. 5a, 5b, 29); *id.* at 57–58 (citing Ex. 1005, 12:3–15, 29:27–30, Fig. 29). In particular, Petitioner asserts that Ducharme teaches a housing with a lower section and an upper section that enclose an LED lighting platform. *Id.* at 52–53.

Claim 1 also recites

> wherein the light emitted from the LED light system is said suitable for the commercial image recording when said emitted light: (i) is at least 1000 lumens when the first LEDs are lit and is also at least 1000 lumens when the second LEDs are lit; (ii) is broad-spectrum white light having a color deviation corresponding to less than five points of green and less than five points of magenta (5M, 5G) of color compensation (CC), and (iii) has a color rendering index of light emitted from each of the first LEDs or each of the second LEDs, whichever respective plurality of first or second LEDs is lit, that is greater than 90.

Ex. 1001, 12:51–62. Petitioner asserts that Hasnain teaches an LED light system that emits at least 1000 lumens. Pet. 62–63 (citing Ex. 1003 ¶ 490; Ex. 1008, 4:2–3, 4:37–43). Petitioner asserts that Ianiro teaches an LED

light system with a color deviation of less than five points of green and less than five points of magenta ("5M, 5G") of color compensation, and Ducharme and Ianiro each teach an LED light system with a color rendering index ("CRI") greater than 90. *Id.* at 61–63 (citing Ex. 1005, 4:1–5, 4:14–18, 25:36–43; Ex. 1007, 2:25–3:1, 3:17–19, 7:11–15).

To show that Hasnain teaches an LED light system that emits at least 1000 lumens, Petitioner relies on Hasnain's teaching that "white light sources based on GaN blue emitting LEDs generate 70 to 100 lumens per watt." *Id.* at 62 (citing Ex. 1008, 4:2–3). Petitioner also relies on Hasnain's teaching that "[i]f the LEDs are spaced apart along the length of heat-dissipating structure, between 0.5 and 1 watt of heat per square inch of surface area can be dissipated without raising the temperature of the LEDs by more than 30° C above ambient." *Id.* (citing Ex. 1008, 4:37–40). According to Petitioner, "on an almost one-inch wide printed circuit board . . . within a fixture having a length of four feet . . . , there exists at least 44 square inches of surface area to dissipate heat, such that up to 44 watts can be dissipated without the necessity of additional heat sinks." *Id.* at 62–63 (citing Ex. 1003 ¶ 490). Thus, Petitioner concludes that "even assuming using LEDs capable of emitting 70 lumens per watt, an LED-based lamp having an elongated 44-inch long and 1-inch-wide circuit board would be able to produce 1,540 lumens from just 22 watts, and up to 3,080 lumens at 44 watts." *Id.* at 63 (citing Ex. 1003 ¶ 490).

Petitioner asserts that it would have been obvious to combine the cited teachings of Ducharme, Ianiro, Katzir, and Hasnain. *Id.* at 47–50 (citing Ex. 1003 ¶¶ 417–435). Specifically, Petitioner contends that "based on the teachings of Ducharme, a POSITA would have known that it was of critical

importance to have lighting systems capable of emitting light with a high CRI, minimal deviation from green and magenta (preferably 0), and a high lumen output." *Id.* at 49 (citing Ex. 1003 ¶¶ 417–426). Thus, according to Petitioner, "[a] POSITA would have been motivated to utilize the teachings of Katzir, Ianiro, and Hasnain to create the LED lighting device disclosed in Ducharme capable of . . . broad-spectrum white light with a high (greater than 90) CRI and less than five points of deviation of green and magenta color compensation, with each predetermined color temperature emitting greater than 1000 lumens." *Id.* at 50 (citing Ex. 1003 ¶¶ 434–435).

Patent Owner argues that Petitioner does not show sufficiently that it would have been obvious to combine the cited teachings of Ducharme and Hasnain. PO Resp. 22–39. Specifically, Patent Owner contends that a person of ordinary skill in the art "would not combine any teaching of wattage . . . of Hasnain . . . with the teachings of Ducharme" because "Ducharme teaches a 'linear, tube-like form factor,'" whereas "a critical part of Hasnain's structure is to provide . . . open-air for cooling the LEDs." *Id.* at 31. Patent Owner contends that using the wattage suggested for Hasnain's "open-air" device inside Ducharme's tubular housing would increase the LEDs' temperature and degrade the LEDs' lumen output, color deviation, and CRI. *Id.* at 27–28, 30–31.

a. *Reason to Combine Ducharme and Hasnain*

As discussed above, Petitioner asserts that a person of ordinary skill in the art would have had reason to "achieve high lumen output" and thus "would have been motivated to utilize the teachings of . . . Hasnain to create the LED lighting device disclosed in Ducharme capable of . . . emitting greater than 1000 lumens." Pet. 49–50. Even if Petitioner is correct that a

person of ordinary skill in the art would have had reason to achieve high lumen output, we determine that Petitioner does not show sufficiently that a person of ordinary skill in the art would have had reason to combine the specific cited teachings of Ducharme and Hasnain.

Petitioner relies on Ducharme's Figures 5a, 5b, and 29 as teaching a housing and cover having a fluorescent light tube form factor. Pet. 52–53, 57–58. Ducharme's Figures 5a and 5b are reproduced below.

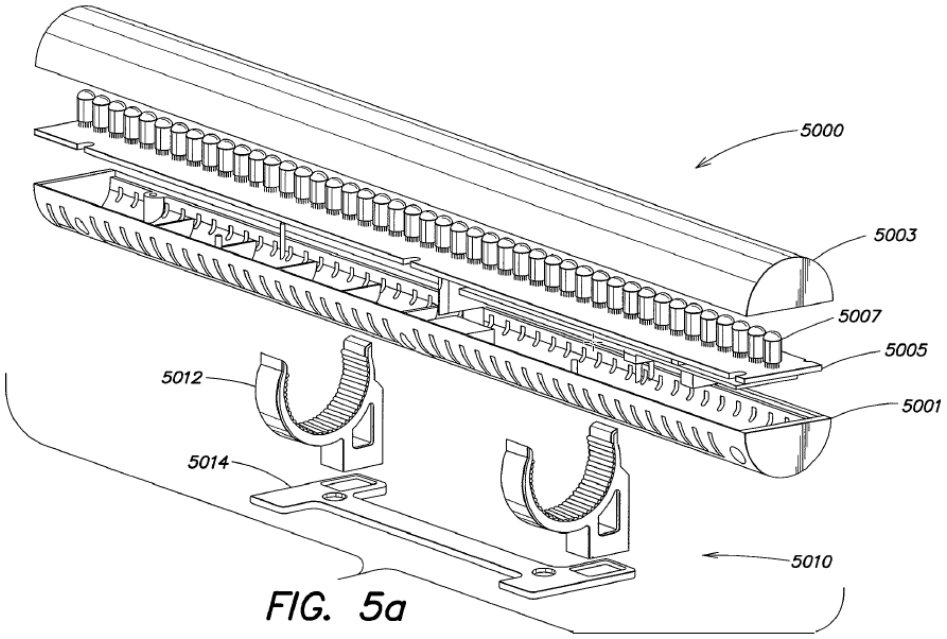

FIG. 5a

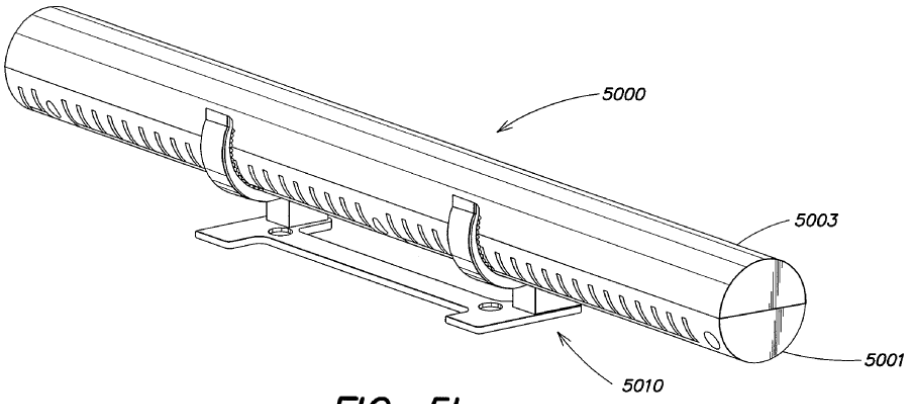

FIG. 5b

Ex. 1005, Figs. 5a, 5b. Ducharme's Figures 5a and 5b show a housing with lower body section 5001 and upper body section 5003 that enclose lighting platform 5005.[4] *Id.* at 12:49–53, Figs. 5a, 5b. Petitioner asserts that lower body section 5001 and upper body section 5003 teach a housing and cover having a fluorescent light tube form factor. Pet. 52–53, 57–58.

Petitioner relies on Hasnain as teaching an LED light system that emits at least 1000 lumens. Pet. 62–63. Petitioner asserts that Hasnain's LED light emits at least 1000 lumens based on Hasnain's teaching that "if the LEDs are spaced apart along the length of heat-dissipating structure 36, between 0.5 and 1 watt of heat per square inch of surface area can be dissipated without raising the temperature of the LEDs by more than 30° C ambient." Ex. 1008, 4:36–40; *see* Pet. 62; Ex. 1003 ¶ 490; Tr. 21:13–22. Petitioner also points to Hasnain's teaching that "if additional heat dissipation is required, an additional heat-dissipating surface 47 on the backside of the light source can be utilized." Ex. 1008, 4:41–43; *see* Pet. 62; Ex. 1003 ¶ 490.

Hasnain describes heat-dissipating structure 36 and additional heat-dissipating structure 47 in connection with Figures 2 and 3. Ex. 1008, 3:36–38, 4:23–43. Hasnain's Figures 2 and 3 are reproduced below.

[4] Ducharme's Figure 29 shows a similar housing. Pet. 52–53; Ex. 1005, 29:16–36, Fig. 29.

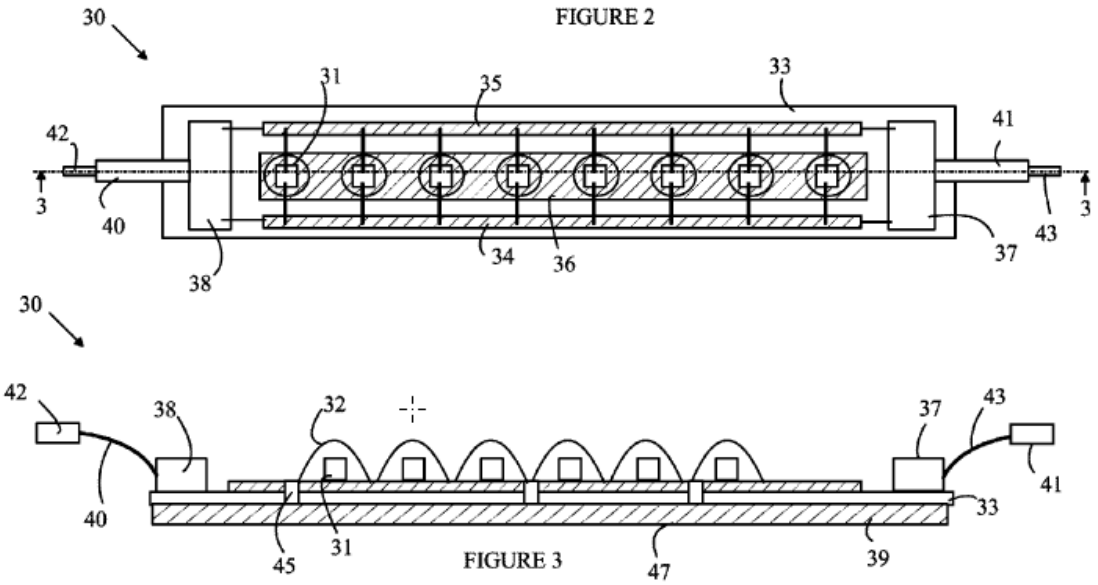

Id. at Figs. 2, 3. Hasnain's Figures 2 and 3 show LED light source 30 with LEDs 31, heat-dissipating structure 36, and additional heat-dissipating structure 47. *Id.* at 3:39–41, 4:23–28, 4:41–43. Hasnain's Figures 2 and 3 also show LED light source 30 *without* a tubular housing. *Id.* at Figs. 2, 3; *see* PO Resp. 25–27; Ex. 2080 ¶ 49. Hasnain teaches that "the LEDs are distributed on heat-dissipating structure 36 such that the surface area presented by the heat-dissipating structure is sufficient to dissipate a significant fraction of the heat of each LED *to the surrounding air*." Ex. 1008, 4:23–28 (emphasis added).

Hasnain further describes additional heat-dissipating structure 47 in connection with Figure 4. *Id.* at 4:51–5:6, Fig. 4. Hasnain's Figure 4 is reproduced below.

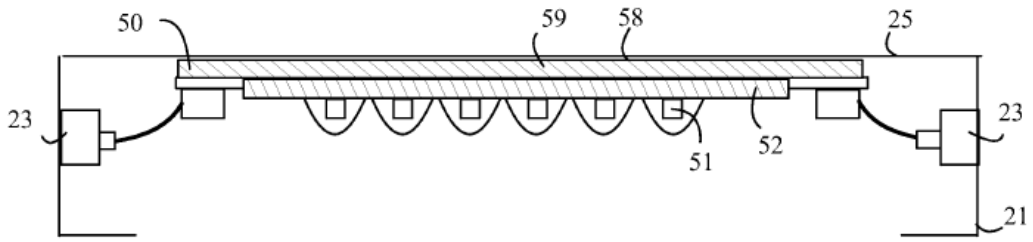

FIGURE 4

Id. at Fig. 4. Hasnain's Figure 4 shows LED light source 50 with heat-dissipating structure 59[5] mounted in enclosure 21. *Id.* at 4:61–5:6, Fig. 4. Hasnain's Figure 4 also shows LED light source 50 *without* a tubular housing. *Id.* at Fig. 4. Enclosure 21 is not a fluorescent light tube, but, rather, an "existing" structure that a fluorescent light tube is "inserted into" and "provide[s] the power for operating the fluorescent tube[]." *Id.* at 2:50–56, 4:58–61, Fig. 1A; *see* PO Sur-reply 16; Ex. 2080 ¶ 66. Hasnain teaches that additional "heat-dissipating structure 47 can transfer heat *to the air* if light source 30 is suspended above the back wall 25 of enclosure 21." Ex. 1008, 4:51–57 (emphasis added). Alternatively, "heat transfer can be provided by mounting light source 30 such that surface 47 is *in thermal contact with* the back wall of the existing fluorescent tube enclosure [21]." *Id.* at 4:58–64 (emphasis added).

Thus, Petitioner's assertion that Hasnain's LED light emits at least 1000 lumens requires distributing LEDs on a heat-dissipating structure that transfers heat to the surrounding air or via thermal contact with another existing structure. *Id.* at 4:23–28, 4:51–5:6, Figs. 3, 4; *see* Ex. 2080 ¶¶ 49,

[5] Figure 4 shows heat-dissipating structure 59, not heat-dissipating structure 47. Ex. 1008, Fig. 4. But Hasnain describes those structures similarly. *Id.* at 4:51–5:6.

66. Petitioner, though, does not explain how Hasnain's heat-dissipating structure would work when combined with Ducharme's tubular housing. *See* Pet. 62–63; Pet. Reply 10; Ex. 1003 ¶ 490; Ex. 1049 ¶¶ 41–49.

In particular, Petitioner does not explain how Hasnain's heat-dissipating structure would dissipate sufficient heat to the surrounding air when enclosed in Ducharme's tubular housing. *See id.* Petitioner also does not explain how Hasnain's heat-dissipating structure would dissipate sufficient heat via thermal contact with another existing structure when enclosed in Ducharme's tubular housing. *See id.* Furthermore, Petitioner does not propose combining Ducharme and Hasnain so that Hasnain's heat-dissipating structure is in thermal contact with Ducharme's tubular housing. *See id.* Thus, Petitioner does not show sufficiently *how* the proposed combination of Ducharme and Hasnain was supposed to work. *See Personal Web Techs., LLC v. Apple, Inc.*, 848 F.3d 987, 994 (Fed. Cir. 2017) ("[T]he Board nowhere clearly explained, or cited evidence showing, *how* the combination of the two references was supposed to work.").

Petitioner cites to a portion of the Holmes Supplemental Declaration that concludes that Hasnain's heat-dissipating structure "could readily be used in a T12 form factor LED light, as expressly recognized by Hasnain." Ex. 1049 ¶¶ 45–46; *see* Pet. Reply 10 (citing Ex. 1049 ¶¶ 41–49). But Petitioner does not present that assertion in the Petition or Reply. *See* Pet. 62–63; Pet. Reply 10. Thus, we give no weight to that portion of the Holmes Supplemental Declaration. *See* 37 C.F.R. § 42.104(b)(5) ("The Board may exclude or give no weight to evidence where a party has failed to state its relevance.").

Moreover, even if we consider that portion of the Holmes Supplemental Declaration, we disagree with Mr. Holmes's statement that Hasnain teaches enclosing its heat-dissipating structure in a fluorescent light tube. Hasnain teaches "a replacement LED light source for fluorescent tube 22 [that] plug[s] into the same connectors and operate[s] from the voltage patterns generated by the ballasts." Ex. 1008, 3:23–26. Hasnain also teaches that "the replacement LED light source has a plurality of LEDs mounted on a heat-dissipating substrate that has a width that is less than or equal to the diameter of the fluorescent tube that the light source is designed to replace." *Id.* at 5:52–56. Thus, Hasnain teaches that its LED light fits into, and connects with, an existing structure that previously held a fluorescent light tube. *Id.* at 2:50–56, 3:23–26, 4:58–64, 5:52–56, Figs. 1A, 4. But, as discussed above, Hasnain shows that its heat-dissipating structure is not enclosed in a tubular housing so that it can dissipate heat to the surrounding air or via thermal contact with the existing structure. *Id.* at 2:50–56, 4:23–28, 4:51–64, Figs. 1A, 3, 4.

Furthermore, Mr. Holmes's reliance on Hasnain's cylindrical lens is unavailing. Hasnain's Figure 5 shows cylindrical lens 61 mounted above LEDs 31. Ex. 1008, 6:48–58, Fig. 5. But the LED light in Figure 5 does not include a bottom enclosure. *Id.* at Fig. 5. Thus, Hasnain's additional heat-dissipating structure could still dissipate sufficient heat when suspended above or placed in thermal contact with another existing structure. *Id.* at 4:52–64. In contrast, as discussed above, Petitioner does not explain how Hasnain's heat-dissipating structure would work when combined with Ducharme's tubular housing. *See* Pet. 62–63; Pet. Reply 10; Ex. 1003 ¶ 490; Ex. 1049 ¶¶ 41–49.

b. *Petitioner's Arguments*

Petitioner presents several arguments regarding its proposed combination. Pet. Reply 7–17. First, Petitioner asserts that neither the written description nor the claims of the '582 patent mention heat dissipation. Pet. Reply 7–8 (citing Ex. 1043, 195:13–16); *id.* at 16. According to Petitioner, "[b]ecause the alleged 'thermal issues' are not recited in the [c]hallenged [c]laims or even the '582 patent, they are of no moment to the patentability of the [c]hallenged [c]laims." *Id.* at 8.

Petitioner's argument is unavailing. Petitioner bears the burden of demonstrating by a preponderance of the evidence that a person of ordinary skill in the art would have found it obvious to combine the cited teachings of Ducharme and Hasnain. Here, Petitioner proposes combining Ducharme's tubular housing with Hasnain's lumen output. Pet. 49–50, 52–53, 57–58, 62–63. As discussed above, Petitioner's assertion that Hasnain's LED light emits at least 1000 lumens requires Hasnain's heat-dissipating structure 36 and potentially heat-dissipating structure 47. *Id.* at 62–63; Ex. 1003 ¶ 490. But Petitioner does not explain how Hasnain's heat-dissipating structure would work when combined with Ducharme's tubular housing. *See* Pet. 62–63; Pet. Reply 10; Ex. 1003 ¶ 490; Ex. 1049 ¶¶ 41–49.

Furthermore, the evidence of record indicates that heat dissipation is relevant to claim 1. Claim 1 requires an LED light system that emits light of at least 1000 lumens, a color deviation of less than 5M, 5G, and a CRI greater than 90. Ex. 1001, 12:51–62. The evidence of record indicates that using the wattage suggested by Hasnain (i.e., 22W to 44W) inside Ducharme's tubular housing without sufficient heat dissipation would increase the LEDs' temperature. PO Resp. 27–28, 34; PO Sur-reply 14–16;

Ex. 1039, 97:13–16; Ex. 2047 ¶ 46; Ex. 2080 ¶¶ 49–51; Ex. 2100 ¶¶ 73–75, 85; Tr. 23:3–15. The evidence of record also indicates that increased temperatures can degrade the LEDs' lumen output, color deviation, and CRI. PO Resp. 30–31; PO Sur-reply 15; Ex. 2047 ¶¶ 31–32, 61–62; Ex. 2080 ¶¶ 60–61; Ex. 2100 ¶¶ 69–72. Thus, whether Hasnain's heat-dissipating structure would dissipate sufficient heat when combined with Ducharme's tubular housing is relevant to the limitations of claim 1.

Second, Petitioner asserts that the proposed combination does not involve "combining Hasnain's open tube into Ducharme's design." Pet. Reply 9. Petitioner states that it "does not rely upon Hasnain for its teaching of an uncovered LED light system, but merely cites to Hasnain to show an expected lumens per watt output for a typical T12 LED device." *Id.* at 8–9 (citing Pet. 62). Petitioner's argument is unavailing. As discussed above, Petitioner's assertion that Hasnain's LED light emits at least 1000 lumens requires Hasnain's heat-dissipating structure 36 and potentially heat-dissipating structure 47. Pet. 62–63; Ex. 1003 ¶ 490; Tr. 21:13–22. Thus, we disagree that Petitioner can rely on Hasnain's lumen output without explaining how Hasnain's heat-dissipating structure would work when combined with Ducharme's tubular housing.

Third, Petitioner asserts that "[t]he thermal concerns raised by Patent Owner were known to those of skill in the art," and "would have been nothing more than a trivial concern or a routine design consideration." Pet. Reply 10, 16 (citing Ex. 1039, 75:4–14; Ex. 1049 ¶¶ 33–40). Petitioner's argument is unavailing. Petitioner's asserted challenge to patentability does not rely on any well-known, "trivial," or "routine" considerations for addressing heat dissipation. *See* Pet. 62–63. Rather,

Petitioner relies on Hasnain's particular heat-dissipating structure. *Id.* (citing Ex. 1003 ¶ 490; Ex. 1008, 4:37–43). And, as discussed above, Petitioner does not explain how Hasnain's heat-dissipating structure would work when combined with Ducharme's tubular housing. *See* Pet. 62–63; Pet. Reply 10; Ex. 1003 ¶ 490; Ex. 1049 ¶¶ 41–49.

Fourth, Petitioner asserts that LED light tubes existed prior to the '582 patent without heat dissipation issues. Pet. Reply 4, 10–14. Specifically, Petitioner contends that the Durosite and MacTech LED light tubes "predate the '582 patent" and "were operable in view of the thermal issues identified" by Patent Owner. *Id.* at 4 (citing Ex. 1001, 2:43–46; Ex. 1049 ¶¶ 24–25; Ex. 2123, 5); *id.* at 10–14 (citing Ex. 1023, 4; Ex. 1025, 93:12–25; Ex. 1043, 113:18–21; Ex. 1045, 88:19–24; Ex. 1046, 56:2–7, 60:15–19; Ex. 1047, 64:19–65:9; Ex. 2016, 1; Ex. 2041 ¶ 12; Ex. 2066 ¶ 8). Petitioner also contends that Patent Owner's declarant, Mr. Kevin Baxter, "testified that before the time of the invention, [Litepanels] 'had the technical capability to build . . . two-color models, e.g., single tubes containing both 5600K cool white and 3200K warm white LEDs.'"[6] *Id.* at 12 (citing Ex. 1042, 86:6–7; Ex. 2047 ¶ 25).

Petitioner's fourth argument is unavailing. Petitioner's asserted challenge to patentability does not rely on the Durosite or MacTech LED light tubes or Litepanel's technical capability. *See* Pet. 47–75. Rather, Petitioner asserts that Hasnain's LED light emits at least 1000 lumens using

[6] Petitioner also contends that Mr. Baxter "testified that he is unaware of any thermal issues for bi-color LED lights tubes." Pet. Reply 10–11 (citing Ex. 1042, 99:12–14). But the cited testimony does not discuss any LED light tubes that existed prior to the '582 patent. *See* Ex. 1042, 98:9–99:14.

Hasnain's particular heat-dissipating structure. *Id.* at 62–63 (citing Ex. 1003 ¶ 490; Ex. 1008, 4:37–43). And, as discussed above, Petitioner does not explain how Hasnain's heat-dissipating structure would work when combined with Ducharme's tubular housing. *See* Pet. 62–63; Pet. Reply 10; Ex. 1003 ¶ 490; Ex. 1049 ¶¶ 41–49.

Furthermore, the evidence of record does not show that the alleged prior art LED light tubes emit light of at least 1000 lumens, a color deviation less than 5M, 5G, and a CRI greater than 90. For example, the cited evidence indicates that the Durosite LED light tube emits at least 1000 lumens, but does not indicate that it has a color deviation less than 5M, 5G or a CRI greater than 90. *See* Ex. 1001, 2:43–50; Ex. 1049 ¶¶ 24–25; Ex. 2123, 5. The cited evidence states that the MacTech LED tube has "almost zero percent green at 93 CRI," but does not state that the MacTech LED tube emits at least 1000 lumens. Ex. 1023, 4; *see* Ex. 1025, 93:12–25; Ex. 1043, 113:18–24 ("MacTech ran at nine to ten watts"); Ex. 1045, 87:23–88:24; Ex. 1046, 56:2–7, 60:15–19; Ex. 1047, 64:12–65:9; Ex. 2041 ¶ 12; Ex. 2066 ¶ 8. Lastly, the cited evidence does not indicate that Litepanels's potential LED light tube would have emitted light of at least 1000 lumens, a color deviation less than 5M, 5G, and a CRI greater than 90. *See* Ex. 1042, 86:6–7; Ex. 2047 ¶ 25. In fact, Mr. Baxter explains that Litepanels did not develop an LED tube light because "[p]roper thermal management becomes far *more* challenging if the LEDs are packed into narrow tubes," and excessive heat "destroys the LEDs' high color rendering index ('CRI') [and brightness]."[7] Ex. 2047 ¶¶ 27, 31–32 (emphasis and alteration in original).

[7] Litepanels and others developed LED light panels instead of LED light tubes. PO Resp. 48–50; Ex. 2047 ¶ 77; Ex. 2100 ¶¶ 126–128, 140.

Fifth, Petitioner asserts that claim 1 "merely claim[s] optimum or workable color or temperature ranges of known LED devices and is thus not patentable." Pet. 61 (citing *In re Aller*, 220 F.2d 454 (CCPA 1955)); *see id.* at 49; Pet. Reply 15. Petitioner's argument is unavailing. Petitioner does not show sufficiently that claim 1 recites ranges that "overlap the ranges disclosed in the prior art." *E.I. DuPont de Nemours & Co. v. Synvina C.V.*, 904 F.3d 996, 1006 (Fed. Cir. 2018); *see In re Applied Materials*, 692 F.3d 1289, 1295 (Fed. Cir. 2012) ("the prior art discloses dimensional values overlapping the ranges claimed"). As discussed above, the evidence of record does not show that any alleged prior art LED light tubes emit light within a range that includes at least 1000 lumens, a color deviation less than 5M, 5G, and a CRI greater than 90.

Sixth, Petitioner asserts that claim 1 involves "simply a matter of selecting the correct LEDs." Pet. Reply 15 (citing Ex. 1001, 11:39–45; Ex. 1047, 238:24–242:9; Ex. 1049 ¶¶ 28–31); *id.* at 17 (citing Ex. 1039, 90:19–22; Ex. 1047, 321:7–16). Petitioner's argument is unavailing. As discussed above, Petitioner's assertion that Hasnain's LED light emits at least 1000 lumens relies on Hasnain's teaching that "if the LEDs are spaced apart along the length of heat-dissipating structure 36, between 0.5 and 1 watt of heat per square inch of surface area can be dissipated without raising the temperature of the LEDs by more than 30° C above ambient." Ex. 1008, 4:37–40; *see* Pet. 62–63; Ex. 1003 ¶ 490. Thus, Hasnain indicates that emitting at least 1000 lumens involves using a specific heat-dissipating structure, not merely selecting certain LEDs.

Seventh, Petitioner asserts that a person of ordinary skill in the art would have known to "use [Ducharme's] aluminum housing to address

thermal issues." Pet. Reply 16–17 (citing Pet. 65; Ex. 1005, 11:54–12:2; Ex. 1039, 89:10–21, 90:19–22). Petitioner's argument is unavailing. The cited portion of Ducharme refers to Figure 4 and teaches that certain portions of a housing "are preferably made from a material that conducts heat, such as aluminum." Ex. 1005, 11:54–55, 11:67–12:2. But Ducharme's Figure 4 refers to a different embodiment than the embodiment Petitioner relies on as teaching the housing and cover recited in claim 1. Pet. 51–53, 57–58, 65; Ex. 1005, 11:54–55, 12:49–51, 29:16–19, Figs. 4, 5a, 5b, 29. And Petitioner does not explain specifically why or how a person of ordinary skill in the art would have combined those different embodiments. *See* Pet. 65; Pet. Reply 16–17. Moreover, Petitioner does not identify specific evidence indicating that Ducharme's aluminum housing could have been used instead of Hasnain's heat-dissipating structure to achieve Hasnain's lumen output and also maintain a color deviation less than 5M, 5G and a CRI greater than 90.[8] *See* Pet. 65; Pet. Reply 16–17; Ex. 1039, 89:10–21, 90:19–22.

Petitioner also cites to a portion of the Holmes Supplemental Declaration that mentions Ducharme's air slots. Ex. 1049 ¶ 48; *see* Pet. Reply 10 (citing Ex. 1049 ¶¶ 41–49). But Petitioner does not mention that feature in the Petition or Reply. *See* Pet. 62–63; Pet. Reply 10. Thus, we give no weight to that portion of the Holmes Supplemental Declaration. *See*

[8] The cited testimony of Patent Owner's declarant, Dr. Gary Allen, only discusses the '582 patent's written description, not Ducharme's teachings. Ex. 1039, 88:18–90:23. Further, Dr. Allen does not state that the '582 patent's aluminum housing alone provides sufficient heat dissipation. *Id.* at 90:8–9 ("[T]he claims indicate to us that part of that solution was an aluminum housing.").

37 C.F.R. § 42.104(b)(5) ("The Board may exclude or give no weight to evidence where a party has failed to state its relevance.").

Moreover, even if we consider that portion of the Holmes Supplemental Declaration, Mr. Holmes's reliance on Ducharme's air slots is unavailing. Mr. Holmes states that Ducharme's air slots would "allow for airflow through Ducharme's T12 LED tubes, which would further enhance heat dissipation." Ex. 1049 ¶ 48. But Petitioner does not identify specific evidence indicating that Ducharme's air slots could have been used instead of Hasnain's heat-dissipating structure to achieve Hasnain's lumen output and also maintain a color deviation less than 5M, 5G and a CRI greater than 90. *See id.*; PO Sur-reply 21–22; Ex. 1039, 107:4–9 ("I know it to be ineffective.").

c. *Summary*

For the foregoing reasons, Petitioner does not show sufficiently that claim 1 would have been obvious over Ducharme, Ianiro, Katzir, and Hasnain.

2. Claims 18 and 23

Claims 18 and 23 recite limitations similar to those discussed above for claim 1. Ex. 1001, 14:1–3, 14:24–27, 14:47–57, 15:28–30, 15:50–63. Petitioner's arguments and evidence for claims 18 and 23 do not compensate for the deficiencies discussed above for claim 1. *See* Pet. 69–74. Thus, for the same reasons discussed above for claim 1, Petitioner does not show sufficiently that claims 18 and 23 would have been obvious over Ducharme, Ianiro, Katzir, and Hasnain.

3. Claims 2, 3, 6–14, 16, 17, 19, 21, 22, 24, and 26–31

Claims 2, 3, 6–14, 16, 17, 19, 21, 22, 24, and 26–31 depend, directly or indirectly, from claim 1, 18, or 23. Petitioner's arguments and evidence for claims 2, 3, 6–14, 16, 17, 19, 21, 22, 24, and 26–31 do not compensate for the deficiencies discussed above for claims 1, 18, and 23. *See* Pet. 64–69, 72, 74–75. Thus, for the same reasons discussed above for claims 1, 18, and 23, Petitioner does not show sufficiently that claims 2, 3, 6–14, 16, 17, 19, 21, 22, 24, and 26–31 would have been obvious over Ducharme, Ianiro, Katzir, and Hasnain.

4. Summary

For the foregoing reasons, Petitioner has not shown by a preponderance of the evidence that claims 1–3, 6–14, 16–19, 21–24, and 26–31 would have been obvious over Ducharme, Ianiro, Katzir, and Hasnain.

III. CONCLUSION

Petitioner has not shown by a preponderance of the evidence that claims 1–3, 6–14, 16–19, 21–24, and 26–31 of the '582 patent are unpatentable.

In summary:

Claims	35 U.S.C. §	Reference(s)/Basis	Claims Shown Unpatentable	Claims Not Shown Unpatentable
1–3, 6–14, 16–19, 21–24, 26–31	103	Kit, Ianiro, Ducharme, Katzir		1–3, 6–14, 16–19, 21–24, 26–31
1–3, 6–14, 16–19, 21–24, 26–31	103	Ducharme, Ianiro, Katzir, Hasnain		1–3, 6–14, 16–19, 21–24, 26–31

Claims	35 U.S.C. §	Reference(s)/Basis	Claims Shown Unpatentable	Claims Not Shown Unpatentable
Overall Outcome				1–3, 6–14, 16–19, 21–24, 26–31

IV. ORDER

It is hereby

ORDERED that claims 1–3, 6–14, 16–19, 21–24, and 26–31 of the ’582 patent are not shown unpatentable; and

FURTHER ORDERED that, because this is a Final Written Decision, parties to the proceeding seeking judicial review of the decision must comply with the notice and service requirements of 37 C.F.R. § 90.2.

For PETITIONER:

David M. Magee
Trenton Ward
Heath J. Briggs
GREENBERG TRAURIG, LLP
david.magee@gtlaw.com
trenton.ward@gtlaw.com
briggsh@gtlaw.com

For PATENT OWNER:

David L. Hoffman
NOLAN HEIMANN LLP
dhoffman@nolanheimann.com

Robert Katz
KATZ PLLC
rkatz@katzfirm.com