S 60-C

SkyPanel is a compact, ultra-bright and high-quality LED soft light that sets a new standard for the industry. With a design focused on form, color, beam field and output, SkyPanel represents the culmination of more than a decade of research and development of LED technology at ARRI.

SkyPanel will initially be available in two sizes: the S60 and S30. The S60 is a mid-range model, featuring a light aperture of 645 x 300 mm and accommodating the vast majority of applications. The S30 is a smaller, more portable version; half the length of the S60, it is perfect for on-the-go mobile applications. Both models are available in fully color tuneable and remote phosphor versions.

Incorporating features of ARRI's successful L-Series LED Fresnels, SkyPanel is one of the most versatile soft lights on the market, as well as one of the brightest. Like the L-Series, SkyPanel 'C' (Color) versions are fully tuneable; correlated color temperature is adjustable between 2,800 K and 10,000 K, with excellent color rendition over the entire range. Full plus and minus green correction can be achieved with the simple turn of a knob, and in addition to CCT control, vivid color selection and saturation adjustment is also possible.

Unlike other tuneable fixtures, SkyPanel makes no sacrifice when it comes to light output. SkyPanel puts out a tremendous amount of light, in a soft and uniform beam field. Brighter than a 2 kW tungsten soft light or a 6 kW tungsten space light, the SkyPanel S60 has more than enough light for most applications. At the same time, the lamphead is able to perform beautifully at lower light levels. This range of illumination and color gives users an unprecedented amount of control.

Made in Germany to the high standards for which all ARRI products are known, SkyPanel is built to last – constructed from resilient materials and assembled by hand with great care. Other features include an on-board battery input for mobile applications, LAN port for network connectivity, USB-A port for firmware updates via thumb drive, and many more.

Photometric Data (preliminary)

	3 m / 9.8 ft		5 m / 16.4 ft		7 m / 23.0 ft		9 m / 29.5 ft	
S60-C	3,200 K	5,600 K	3,200 K	5,600 K	3,200 K	5,600 K	3,200 K	5,600 K
S60-C with Standard Diffusion	1092 lx	1156 lx	393 lx	416 lx	201 lx	212 lx	121 lx	128 lx
	101 fc	107 fc	37 fc	39 fc	19 fc	20 fc	11 fc	12 fc
S60-C with Lite Diffusion	1284 lx	1359 lx	462 lx	489 lx	236 lx	250 lx	143 lx	151 lx
	119 fc	126 fc	43 fc	45 fc	22 fc	23 fc	13 fc	14 fc
S60-C with Heavy Diffusion	888 lx	939 lx	320 lx	338 lx	163 lx	173 lx	99 lx	104 lx
	82 fc	87 fc	30 fc	31 fc	15 fc	16 fc	9 fc	10 fc
S60-C with Intensifier	1748 lx	1849 lx	629 lx	666 lx	321 lx	340 lx	194 lx	205 lx
	162 fc	172 fc	58 fc	62 fc	30 fc	32 fc	18 fc	19 fc

Order No.	Description
L0.0007063	S60-C, Manual, Blue/Silver, 3m DC Cable, S60 PSU, PSU Rail Mount, Standard Diffusion Panel, Edison powerCON
L0.0007064	S60-C, Manual, Blue/Silver, 3m DC Cable, S60 PSU, PSU Rail Mount, Standard Diffusion Panel, Schuko powerCON
L0.0007065	S60-C, Manual, Blue/Silver, 3m DC Cable, S60 PSU, PSU Rail Mount, Standard Diffusion Panel, Chinese powerCON
L0.0007066	S60-C, Pole Op, Blue/Silver, 1m DC Cable, S60 PSU, PSU Rail Mount, Standard Diffusion Panel, Bare Ends powerCON
L0.0007067	S60-C, Pole Op, Black, 1m DC Cable, S60 PSU, PSU Rail Mount, Standard Diffusion Panel, Bare Ends powerCON

SOFT LIGHTING | REDEFINED

This ARRI SkyPanel Product Information (Ident.-No.: 80.0006856) is published by Arnold & Richter Cine Technik, October 2015 © ARRI/2015
Technical data and offerings are subject to change without notice. All rights reserved. Without any warranty. Not binding 10/2015. ARRI is a registered trademark of Arnold & Richter Cine Technik GmbH & Co. Betriebs KG.
ARNOLD & RICHTER CINE TECHNIK · TÜRKENSTRASSE 89 · D-80799 MUNICH · PHONE +49 (0)89 3809-0 · FAX +49 (0)89 3809-1244 · www.arri.com

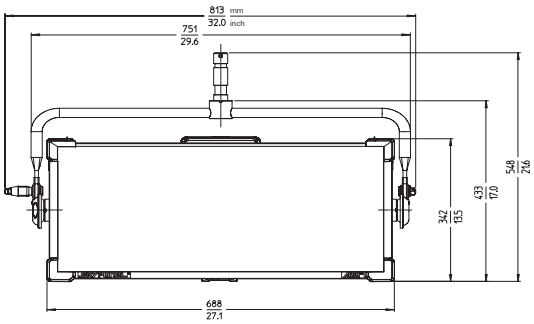

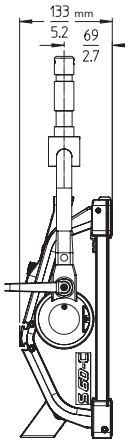

Specifications

Lamphead

Optical System	Soft Diffusion Panel
Light Aperture	645 x 300 mm / (25.4 x 11.8 inches)
Beam Angle	115° (Half Peak Angle)
Weight	Manual Version: 11.7 kg (25.8 lbs) Pole Op Version: 12.8 kg (28.1 lbs)
Handling	Steel Yoke, High Strength Tilt Lock, Pole Operation Option (Pan & Tilt)
Mounting	28 mm Spigot (Junior Pin)
Tilt Angle	+/- 90°
Lamphead Voltage Input	48 V DC
Power Consumption	420 W Nominal, 450 W Maximum
Lamphead Power Connection	Male 3-Pin XLR - 15 amp (Pin 1: Negative / Pin 2: Positive)
Battery Connector	Male 4-Pin XLR - 10 Amp (Pin 1: Negative / Pin 4: Positive)
Battery DC Voltage Range	23 - 36 V DC
Battery Mode Light Output	50% of Total Output
White Light	2,800K - 10,000K Continuously Variable Correlated Color Temperature
Colored Light	Full RBG+W Color Gamut with Hue and Saturation Control
Color Temperature Tolerance	+/- 100 K (nominal), +/- 1/8 Green-Magenta (nominal)
Color Rendition	CRI Average > 95 TLCI Average > 90
Green-Magenta Adjustment	Continuously Adjustable (Full Minusgreen to Full Plusgreen)
Dimming	0 - 100% Continuous
Control	On-Board Controller, 5-Pin DMX In and Through, EtherCon LAN Network Connectivity, USB-A
Remote Device Management (RDM*)	DMX Setup, Hour Counter and Standard RDM Commands
Software Interface	Ethernet: DMX Setup, Fixture Status and Firmware Upgrade Through PC, Mac USB-A: Software upgrade via flash drive
Housing Color	Blue/Silver, Black
Ambient Temperature Operation	-20 to +45° C (-4 to +113° F)
Protection Class	IP 20
Estimated LED Lifetime (L70)	50,000 hours
Estimated Color Shift Over Lifetime	< 200 K
Certifications	CE, FCC; GS, cNRTL, CB

Power Supply Unit

Power Supply Input Range	110 - 240 V AC, 50/60 Hz
Power Supply Output Range	48 V DC
Power Input Connection	powerCON TRUE1 (Bare Ends / Schuko / Edison Cables Available)
Power Output Connection	Female 3-Pin XLR - 10 Amp (Pin 1: Negative / Pin 2: Positive) powerCON TRUE1 (mains power through)
Weight	3.5 kg (7.7 lbs)
Dimensions	383 x 192 x 90 mm (15 x 7.6 x 3.5 inch)
Control	On-Board On/Off Switch
Mounting	Super Clamp Attachment / SkyPanel PSU Rail Mount

All specifications are nominal / typical values.
*RDM Available in future firmware

SOFT LIGHTING | REDEFINED

This ARRI SkyPanel Product Information (Ident.-No.: 80.0006856) is published by Arnold & Richter Cine Technik, October 2015 © ARRI/2015
Technical data and offerings are subject to change without notice. All rights reserved. Without any warranty. Not binding 10/2015. ARRI is a registered trademark of Arnold & Richter Cine Technik GmbH & Co. Betriebs KG.
ARNOLD & RICHTER CINE TECHNIK · TÜRKENSTRASSE 89 · D-80799 MUNICH · PHONE +49 (0)89 3809-0 · FAX +49 (0)89 3809-1244 · www.arri.com